Solicitation 12305-493

Replacement of Pump Station D-38 Project No. 12390

Bid Designation: Public

CITY OF FORT LAUDERDALE

City of Fort Lauderdale

Bid 12305-493
Replacement of Pump Station D-38 Project No. 12390

Bid Number	12305-493
Bid Title	Replacement of Pump Station D-38 Project No. 12390
Bid Start Date	Jul 17, 2019 5:34:02 PM EDT
Bid End Date	Aug 19, 2019 2:00:00 PM EDT
Question & Answer End Date	Aug 9, 2019 5:00:00 PM EDT
Bid Contact	Penelope Burger Procurement Administrator Finance pburger@fortlauderdale.gov
Contract Duration	**One Time Purchase**
Contract Renewal	Not Applicable
Prices Good for	**120 days**
Pre-Bid Conference	**Jul 29, 2019 10:30:00 AM EDT** **Attendance is optional** **Location: An optional pre-bid meeting will be held on MONDAY, JULY 29, 2019, at 10:30 a.m., local time, at City Hall, 100 N. Andrews Avenue, 4th Floor Conference Room, Fort Lauderdale, Florida 33301.**

Bid Comments

This Project is located at Pump Station D-38 at the intersection of SE 25th Avenue and Las Olas Boulevard, in the City of Fort Lauderdale. The work to be accomplished under this contract includes, but is not limited to, the furnishing of all labor, materials, equipment, services, and incidentals for the additions and modifications of the submersible Pump Station D-38. This project also includes coordination with Florida Power & Light for upgrades to existing electrical service.
Added on Jul 29, 2019:
7.29.19 Pre-Bid Sign In Sheet
Added on Aug 5, 2019:
ADDENDUM NO. 1
Update to specification and project drawings.
Added on Aug 7, 2019:
ADDENDUM NO. 2
DRAWINGS AND SPECIFICATIONS
1. DELETE and REPLACE the following drawings: • DELETE Drawing E-2 issued with the bid documents and REPLACE with the drawing issued with this Addendum. • DELETE Drawing E-3 issued with the bid documents and REPLACE with the drawing issued with this Addendum.
LINE ITEM 12305-493-01-02
2. CHANGE Line Item No. 2, Maintenance of Traffic, to add the following language: Maintenance of Traffic include furnishing and installing all temporary road, pedestrian facilities, all required traffic control devices, signs including portable changeable message signs, portable temporary signals, associated required accessories and staff, and law enforcement officers as required to maintain vehicular and pedestrian traffic, all costs associated with preventing the use of any metered parking spaces by the general public as a result of the Maintenance of Traffic Plan or construction activities and all else necessary for a complete and functional Maintenance of Traffic operation. The cost for each parking space is $25 per day and shall be paid to the Transportation and Mobility Department at the City of Fort Lauderdale. Demolition, removal and disposal of all temporary road and pedestrian facilities are also included in this line item.

Added on Aug 12, 2019:
ADDENDUM NO. 3
ADD the attached ATTACHMENT "A", AS-BUILT DRAWINGS, in response to Question 14 request for drawings.

Addendum # 1

New Documents **Addendum_1_8.05.19_.pdf**

Addendum # 2

New Documents **Addendum_2_8.07.19_.pdf**

Changes were made to the following items:
Maintenance of Traffic

Addendum # 3

New Documents **Addendum_3_8.12.19.pdf**

Item Response Form

Item **12305-493--01-01 -** Base Bid: Mobilization and Demobilization
Lot Description Base Bid
Quantity **1 lump sum**
Unit Price
Delivery Location **City of Fort Lauderdale**
See ITB Specifications
See ITB Specifications
Fort Lauderdale FL 33301
Qty 1

Description
Mobilization and demobilization activities include scheduling, temporary facilities, audio-visual documentation of existing site, preparation and submittal of shop drawings, and demobilization and site cleanup.The payment for mobilization and demobilization shall not exceed 5% of the contract price.

Item **12305-493--01-02 -** Base Bid: Maintenance of Traffic
Lot Description Base Bid
Quantity **1 lump sum**
Unit Price
Delivery Location **City of Fort Lauderdale**
See ITB Specifications
See ITB Specifications
Fort Lauderdale FL 33301
Qty 1

Description

Maintenance of Traffic include furnishing and installing all temporary road, pedestrian facilities, all required traffic control devices, signs including portable changeable message signs, portable temporary signals, associated required accessories and staff, and law enforcement officers as required to maintain vehicular and pedestrian traffic, and all else necessary for a complete and functional Maintenance of Traffic operation. Demolition, removal and disposal of all temporary road and pedestrian facilities are also included in this line item.

Added on Aug 7, 2019:

ADDENDUM NO.2

Maintenance of Traffic include furnishing and installing all temporary road, pedestrian facilities, all required traffic control devices, signs including portable changeable message signs, portable temporary signals, associated required accessories and staff, and law enforcement officers as required to maintain vehicular and pedestrian traffic, all costs associated with preventing the use of any metered parking spaces by the general public as a result of the Maintenance of Traffic Plan or construction activities and all else necessary for a complete and functional Maintenance of Traffic operation. The cost for each parking space is $25 per day and shall be paid to the Transportation and Mobility Department at the City of Fort Lauderdale. Demolition, removal and disposal of all temporary road and pedestrian facilities are also included in this line item.

Addendum # 2

Item	**12305-493--01-03 -** Base Bid: By-**Pass Pumping at Pump Station D-38**
Lot Description	Base Bid
Quantity	**1 lump sum**
Unit Price	
Delivery Location	**City of Fort Lauderdale** See ITB Specifications See ITB Specifications Fort Lauderdale FL 33301 **Qty** 1

Description

By-pass pumping include the installation of a temporary gravity sewer plug, providing a stand-by pump, with sufficient capacity to pump into existing sanitary system, and a stand-by generator, with sufficient capacity to power the by-pass system, both on-site during the time the by-pass is active and required during the process of upgrading the pump station.

Item	**12305-493--01-04 -** Base Bid: Demolition Work at Pump Station D**-38**
Lot Description	Base Bid
Quantity	**1 lump sum**
Unit Price	
Delivery Location	**City of Fort Lauderdale** See ITB Specifications See ITB Specifications Fort Lauderdale FL 33301 **Qty** 1

Description

Demolition include the removal and disposal of items including but not limited to: cutting and plugging of existing sanitary sewer force main, existing pump station top slabs and hatches, existing pump station pumps, piping, fittings and appurtenances, pump station electrical and control panels, pull boxes, curb and gutter, concrete sidewalls and trees.

Item	**12305-493--01-05 -** Base Bid: Rehabilitation of Pump Station D**-38**
Lot Description	Base Bid
Quantity	**1 lump sum**
Unit Price	
Delivery Location	**City of Fort Lauderdale**

See ITB Specifications
See ITB Specifications
Fort Lauderdale FL 33301
Qty 1

Description
Rehabilitation of pump station D-38 shall include the complete installation, testing, start up and operation of items including but not limited to: installation of grade rings for wetwell and valve vault, installation of new top slab and hatches for wetwell and valve vault, rehabilitation of wetwell and valve vault structures, internal coatings of structures, dewatering, installation of pumps, all piping, valves, fittings, couplings, pipe supports and appurtenances within the wetwell and valve vault, construction of concrete pad, installation of vent pipe, odor control unit and all other appurtenances.

Item	**12305-493--01-06 - Base Bid: Furnish and Install Force Main, 6 inch, 8 inch and 10 inch PVC C-900**
Lot Description	Base Bid
Quantity	**1 lump sum**
Unit Price	
Delivery Location	**City of Fort Lauderdale** See ITB Specifications See ITB Specifications Fort Lauderdale FL 33301 **Qty** 1

Description
Furnishing and installing force main, 6 , 8 & 10 PVC C-900 include the installation of force main, fittings, restraints, excavation, trench preparation, thrust blocks, dewatering, backfilling, compaction, subgrade, base rock, tack coats, asphalt paving, disposal of waste and excess material, connections to existing force main, connection to pump station D-38 piping, hydrostatic pressure testing, electronic markers (metal tape or wire), survey, producing record drawings, clean-up, necessary adjustments to existing utilities, and all other appurtenant work.

Item	**12305-493--01-07 -** Base Bid: Furnish and Install Sewer 6 inch Plug Valves
Lot Description	Base Bid
Quantity	**2 each**
Unit Price	
Delivery Location	**City of Fort Lauderdale** See ITB Specifications See ITB Specifications Fort Lauderdale FL 33301 **Qty** 2

Description
Furnishing all labor, materials and equipment for the installation of plug valves, complete. Installation shall include layout, excavation, trench preparation, polyethylene encasement, zinc coating, thrust blocks, dewatering, backfilling, compaction, disposal of waste and excess material, hydrostatic pressure testing, electronic markers, clean-up and all other appurtenant work.

Item	**12305-493--01-08 -** Base Bid: Furnish and Install Sewer 8 inch Plug Valves
Lot Description	Base Bid
Quantity	**4 each**
Unit Price	
Delivery Location	**City of Fort Lauderdale** See ITB Specifications See ITB Specifications

Fort Lauderdale FL 33301
Qty 4

Description
Furnishing all labor, materials and equipment for the installation of plug valves, complete. Installation shall include layout, excavation, trench preparation, polyethylene encasement, zinc coating, thrust blocks, dewatering, backfilling, compaction, disposal of waste and excess material, hydrostatic pressure testing, electronic markers, clean-up and all other appurtenant work.

Item	**12305-493--01-09 -** Base Bid: Furnish and Install Sewer 10 inch Plug Valves
Lot Description	Base Bid
Quantity	**1 each**
Unit Price	
Delivery Location	**City of Fort Lauderdale** See ITB Specifications See ITB Specifications Fort Lauderdale FL 33301 **Qty** 1

Description
Furnishing all labor, materials and equipment for the installation of plug valves, complete. Installation shall include layout, excavation, trench preparation, polyethylene encasement, zinc coating, thrust blocks, dewatering, backfilling, compaction, disposal of waste and excess material, hydrostatic pressure testing, electronic markers, clean-up and all other appurtenant work.

Item	**12305-493--01-10 -** Base Bid: Furnish and Install Pump Station D**-38 Electrical Service and Control Panel**
Lot Description	Base Bid
Quantity	**1 lump sum**
Unit Price	
Delivery Location	**City of Fort Lauderdale** See ITB Specifications See ITB Specifications Fort Lauderdale FL 33301 **Qty** 1

Description
Furnishing all labor, material and equipment for complete installation, testing and operation of items including but not limited to: new electrical service conduit and wiring, new pump station control panel, pull boxes, wiring and all appurtenances.

Item	**12305-493--01-11 -** Base Bid: Millings and Resurfacing of Asphalt Pavement
Lot Description	Base Bid
Quantity	**1490 square yard**
Unit Price	
Delivery Location	**City of Fort Lauderdale** See ITB Specifications See ITB Specifications Fort Lauderdale FL 33301 **Qty** 1490

Description
Milling and resurfacing of asphalt pavement to a minimum thickness of 1 inch and include disposal of existing asphalt, applying a tack coat and furnishing, placing and compacting superpave asphalt to the full cross section of existing roadway, including temporary pavement markings and messages, milling and saw cutting of all pavement and all cleanup of the area disturbed by this construction.

Item	**12305-493--01-12 -** Base Bid: Site Restoration
Lot Description	Base Bid
Quantity	**1 lump sum**
Unit Price	
Delivery Location	**City of Fort Lauderdale** See ITB Specifications See ITB Specifications Fort Lauderdale FL 33301 **Qty** 1

Description

Site restoration include complete restoration of surface disturbed by construction including: sodding, concrete sidewalk, ADA ramps, crosswalks, brick pavers, curb and gutter, rim and valve adjustments, reinforcement, temporary striping, removal of temporary striping, street sweeping, retro-reflective pavement markers, thermoplastic pavement markings, signage and bollards.

Item	**12305-493--01-13 -** Base Bid: Furnish and Install Air Release Valve with Maintenance Access **Structure**
Lot Description	Base Bid
Quantity	**2 each**
Unit Price	
Delivery Location	**City of Fort Lauderdale** See ITB Specifications See ITB Specifications Fort Lauderdale FL 33301 **Qty** 2

Description

Furnishing and installing air release valves with maintenance access structures include the construction of air release valves with maintenance access structures, complete, including appurtenances.

CITY OF FORT LAUDERDALE
CONTRACT AND SPECIFICATIONS PACKAGE

BID NO. 12305-493

PROJECT NO. 12390

REPLACEMENT OF PUMP STATION D-38

PENELOPE BURGER, CPPB
PROCUREMENT ADMINISTRATOR
Telephone: (954) 828-5189; E-mail: pburger@fortlauderdale.gov

TABLE OF CONTENTS

Description **Pages**

TABLE OF CONTENTS (continued)

DIVISION 1 – GENERAL REQUIREMENTS (continued)

Description **Pages**

DIVISION 2 - SITEWORK

DIVISION 3 – CONCRETE

DIVISION 9 - FINISHES

DIVISION 11 - EQUIPMENT

DIVISION 16 - ELECTRICAL

TABLE OF CONTENTS (continued)

DIVISION 16 – ELECTRICAL (continued)

Description **Pages**

EXHIBIT

Note: ***The following documents are available electronically for completion and must be returned with your bid* along with your bid security, proof of insurance, and proof of required licenses/certifications.**

INVITATION TO BID

Sealed bids will be received electronically until **2:00 P.M.**, local time, on **August 19, 2019,** and opened immediately thereafter in the 5th Floor Conference Room, City Hall, 100 North Andrews Avenue, Fort Lauderdale, Florida 33301, for **BID NO., 12305-493, PROJECT NO., 12390, REPLACEMENT OF PUMP STATION D-38.**

This Project consists of Drawing File No., **43194-007**, twenty-five **(25)** sheets.

This Project is located at Pump Station D-38 at the intersection of SE 25th Avenue and Las Olas Boulevard, in the City of Fort Lauderdale. The work to be accomplished under this contract includes, but is not limited to, the furnishing of all labor, materials, equipment, services, and incidentals for the additions and modifications of the submersible Pump Station D-38. This project also includes coordination with Florida Power & Light for upgrades to existing electrical service.

NOTE: Payment on this contract will be made by Visa or MasterCard.

Licensing Requirements: – Possession of all active professional licenses, including but not limited to**,** professional engineers, certified general contractors license with unlimited building classification, OSHA construction certification, and trench safety, preferably from the State of Florida Law to provide the required services.

Pre-Bid Meeting: - An optional pre-bid meeting will be held on MONDAY, JULY 29, 2019, at 10:30 a.m., local time, at City Hall, 100 N. Andrews Avenue, 4th Floor Conference Room, Fort Lauderdale, Florida 33301.

While attendance is not mandatory, it is strongly suggested that all Contractors attend the pre-proposal conference. It will be the sole responsibility of the bidder to inspect the City's location(s)/facilities and become familiar with the scope of the City's requirements and systems prior to submitting a proposal. No variation in price or conditions shall be permitted based upon a claim of ignorance. Submission of a proposal will be considered evidence that the proposer has familiarized himself with the nature and extent of the work, equipment, materials, and labor required.

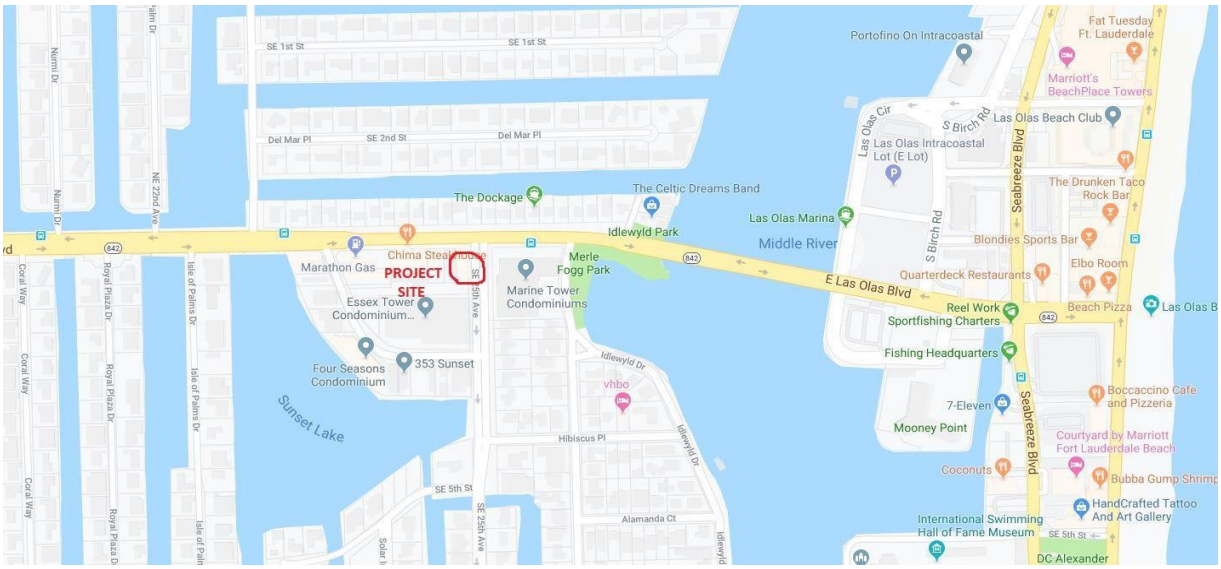

Drawing Plans: Bidding blanks may be obtained **free of charge** at BIDSYNC.COM.

Bid Security: A certified check, cashier's check, bank officer's check or bid bond for **FIVE percent (5%)** of the bid amount, made payable to the City of Fort Lauderdale, Florida, shall accompany each proposal.

Bid Bonds:

Bidders can submit bid bonds for projects four different ways.

1) BidSync allows bidders to submit bid bonds electronically directly through their system using **Surety 2000**. For more information on this feature and to access it, contact BIDSYNC customer care department. Bidders may **upload** their original executed bid bond on BIDSYNC to accompany their bids with the electronic proposal, and deliver the original, signed and sealed hard copy within **five (5)** business days after bid opening, with the company name, bid number and title clearly indicated.

2) Bidders can **hand deliver** their bid bond in a sealed envelope to the Finance Department, Procurement Services Division, 100 North Andrews Avenue, Room 619, Fort Lauderdale, FL 33301-1016, before time of bid opening, with the company name, bid number and title clearly indicated on the envelope.

3) Bidders can **mail** their bid bond to the Finance Department, Procurement Services Division, 100 North Andrews Avenue, Room 619, Fort Lauderdale, Florida 33301-1016, before time of bid opening, with the company name, bid number and title clearly indicated on the envelope.

It will be the sole responsibility of the bidder to ensure that his bid is submitted prior to the bid opening date and time listed. **PAPER BID SUBMITTALS WILL NOT BE ACCEPTED. BIDS MUST BE SUBMITTED ELECTRONICALLY VIA BIDSYNC.COM**

Certified Checks, Cashier's Checks and Bank Drafts:
These **CANNOT** be submitted via BIDSYNC, nor are their images allowed to be uploaded and submitted with your electronic bid. These forms of securities, as well as hard copy bid bonds, must be received on or before the Invitation to Bid (ITB) opening date and time, at the Finance Department, Procurement Services Division, 100 North Andrews Avenue, Room 619, Fort Lauderdale, Florida 33301-1016, with the bid number and title clearly indicated on the envelope.

It is the bidder's sole responsibility to ensure that his bid bond or other bid security is received by the Procurement Services Division before time of bid opening. Failure to adhere to this requirement may be grounds to consider the bid as non-responsive.

The City of Fort Lauderdale reserves the right to waive any informality in any or all bids and to reject any or all bids.

For information concerning technical specifications, please utilize the question/answer feature provided by BIDSYNC at www.bidsync.com. Questions of a material nature must be received prior to the cut-off date specified in the solicitation. Material changes, if any, to the scope of services or bidding procedures, will only be transmitted by written addendum. (See addendum section of BIDSYNC Site). **Contractors please note:** No part of your bid can be submitted via FAX. No variation in price or conditions shall be permitted based upon a claim of ignorance. Submission of a bid will be considered evidence that the Contractor has familiarized himself with the nature and extent of the work, equipment, materials, and labor required. The entire bid response must be submitted in accordance with all specifications contained in this solicitation.

Information on bid results and projects currently out to bid can be obtained on the City's website – http://www.fortlauderdale.gov/departments/finance/procurement-services. For general inquiries, please call (954) 828-5933.

INSTRUCTIONS TO BIDDERS

The following instructions are given for the purpose of guiding bidders in properly preparing their bids or proposals. These directions have equal force and weight with the specifications and strict compliance is required with all of these provisions.

QUALIFICATIONS OF BIDDERS – No proposal will be accepted from, nor will any contract be awarded to, any person who is in arrears to the CITY OF FORT LAUDERDALE, upon any debt or contract, or who has defaulted, as surety or otherwise, upon any obligation to the City, or who is deemed irresponsible or unreliable by the City Commission of Fort Lauderdale.

PERSONAL INVESTIGATION - Bidders shall satisfy themselves by personal investigation, and by such other means as they may think necessary or desirable, as to the conditions affecting the proposed work and the cost. No information derived from maps, plans, specifications, or from the Engineer, City Manager, or their assistants shall relieve the Contractor from any risk or from fulfilling all terms of the contract.

INCONSISTENCIES – Any seeming inconsistency between different provisions of the plans, specifications, proposal or contract, or any point requiring explanation must be inquired into by the bidder, in writing, at least ten (10) days prior to the time set for opening proposals. After proposals are opened, the bidders shall abide by the decision of the Engineer as to such interpretation.

ADDENDA AND INTERPRETATIONS - No interpretations of the meaning of the plans, specifications or other contract documents will be made orally to any bidder. Prospective bidders must request such interpretation in writing as instructed in the bid package. To be considered, such request must be received by the Questions and Answers deadline as indicated in BIDSYNC.COM. Material changes, if any, to the scope of services or bidding procedures will only be transmitted by written addendum. **It is the bidder's responsibility to verify if addendums have been issued in BIDSYNC.COM.** Failure of any bidder to receive any such addenda or interpretation shall not relieve any bidder from any obligation under his bid as submitted. All addenda so issued shall become a part of the contract document. **Bidder** shall verify **in BIDSYNC.COM** that he has all addenda before submitting a bid.

LEGAL CONDITIONS - Bidders are notified to familiarize themselves with the provisions of the laws of the State of Florida relating to hours of labor on municipal work, and with the provisions of the laws of the State of Florida and the Charter and the ordinances of the City of Fort Lauderdale.

PUBLIC ENTITY CRIMES - A person or affiliate who has been placed on the convicted vendor list following a conviction for a public entity crime may not submit a bid on a contract to provide any goods or services to a public entity, may not submit a bid on a contract with a public entity for the construction or repair of a public building or public work, may not submit bids on leases of real property to a public entity, may not be awarded or perform work as a Contractor, supplier, subcontractor, or consultant under a contract with any public entity, and may not transact business with any public entity in excess of the threshold amount provided in Section 287.017, Florida Statutes, for CATEGORY TWO for a period of thirty-six (36) months from the date of being placed on the convicted vendor list.

FORMS OF PROPOSALS - Each proposal and its accompanying statements must be made on the blanks provided. THE FORMS MUST BE SUBMITTED ELECTRONICALLY, IN GOOD ORDER WITH ALL BLANKS COMPLETED, and must show the name of the bidder and a statement as to its contents.

INSTRUCTIONS TO BIDDERS (continued)

FORMS OF PROPOSALS (CONTINUED) - The proposal must be signed by one duly authorized to do so, and in case signed by a deputy or subordinate, the principal's properly written authority to such deputy or subordinate must accompany the proposal. No proposal will be accepted, for any reason whatsoever, which is not submitted to the City as stated above, within the specified time.

INSURANCE - Contractor shall provide and shall require all of its sub-contractors to provide, pay for, and maintain in force at all times during the term of the Agreement, such insurance, including Property Insurance (Builder's Risk), Commercial General Liability Insurance, Business Automobile Liability Insurance, Workers' Compensation Insurance, Employer's Liability Insurance, and Umbrella/Excess Liability, as stated below. Such policy or policies shall be issued by companies authorized to do business in the State of Florida and having agents upon whom service of process may be made in the State of Florida.

BID BOND - A certified check, cashier's check or bank officer's check, for the sum set forth in the advertisement, made payable to the City of Fort Lauderdale, Florida, or bid bond in such amount, shall accompany each proposal as evidence of the good faith and responsibility of the bidder. The check or bond shall be retained by the City as liquidated damages should the bidder refuse to or fail to enter into a contract for the execution of the work embraced in this proposal, in the event the proposal of the bidder is accepted. Retention of such amount shall not be construed as a penalty or forfeiture.

The above bond or check shall be a guarantee that the bidder will, if necessary, promptly execute a satisfactory contract and furnish good and sufficient bonds. As soon as a satisfactory contract has been executed and the bonds furnished and accepted, the check or bond accompanying the proposal of the successful bidder will be returned to him. The certified or other checks or bid bonds of the unsuccessful bidders will be returned to them upon the acceptance of the bid of the successful bidder. If the successful bidder shall not enter into, execute, and deliver such a contract and furnish the required bonds within ten (10) days after receiving notice to do so, the certified or other check or bid bond shall immediately become the property of the City of Fort Lauderdale as liquidated damages. Retention of such amount shall not be construed as a penalty or forfeiture.

FILLING IN BIDS - All prices must be electronically submitted in the proposal pages, and all proposals must fully cover all items for which proposals are asked and no other. Bidders are required to state the names and places of residence of all persons interested, and if no other person is interested, the bidder shall distinctly state such fact and shall state that the proposal is, in all respects, fair and without collusion or fraud. Where more than one person is interested, it is required that all persons interested or their legal representative make all verification and subscribe to the proposal.

PRICES QUOTED: Deduct any discount offered and quote firm net unit prices. In the case of a discrepancy in computing the amount of the bid, the unit price quoted will govern. All prices quoted shall be F.O.B. destination, freight prepaid (Bidder pays and bears freight charges, Bidder owns goods in transit and files any claims), unless otherwise stated in Special Conditions. Each item must be bid separately. No attempt shall be made to tie any item or items contained in the ITB with any other business with the City.

BIDS FIRM FOR ACCEPTANCE: Bidder warrants, by virtue of bidding, that his bid and the prices quoted in his bid will be firm for acceptance by the City for a period of one hundred and twenty (120) days from the date of bid opening unless otherwise stated in the ITB. The City shall award contract within this time period or shall request to the recommended awarded vendor an extension to hold pricing, until products/services have been awarded.

ADDITIONAL ITEMS OR SERVICES: The City may require additional items or services of a similar nature, but not specifically listed in the contract. The Contractor agrees to provide such items or

INSTRUCTIONS TO BIDDERS (continued)

services, and shall provide the City prices on such additional items or services. If the price(s) offered are not acceptable to the City, and the situation cannot be resolved to the satisfaction of the City, the City reserves the right to procure those items or services from other vendors, or to cancel the contract upon giving the Contractor thirty (30) days written notice.

DELETION OR MODIFICATION OF SERVICES: The City reserves the right to delete any portion of the Contract at any time without cause, and if such right is exercised by the City, the total fee shall be reduced in the same ratio as the estimated cost of the work deleted bears to the estimated cost of the work originally planned. If work has already been accomplished on the portion of the Contract to be deleted, the Contractor shall be paid for the deleted portion on the basis of the estimated percentage of completion of such portion.

If the Contractor and the City agree on modifications or revisions to the task elements, after the City has approved work to begin on a particular task or project, and a budget has been established for that task or project, the Contractor will submit a revised budget to the City for approval prior to proceeding with the work.

CAUSES FOR REJECTION - No proposal will be canvassed, considered or accepted which, in the opinion of the City Commission, is informal or unbalanced, or contains inadequate or unreasonable prices for any items; each item must carry its own proportion of the cost as nearly as is practicable. Any alteration, erasure, interlineation, or failure to specify bids for all items called for in the schedule shall render the proposal informal.

REJECTION OF BIDS - The City reserves the right to reject any bid if the evidence submitted by the bidder, or if the investigation of such bidder, fails to satisfy the City that such bidder is properly qualified to carry out the obligations and to complete the work contemplated. Any or all proposals will be rejected, if there is reason to believe that collusion exists among bidders. A proposal will be considered irregular and may be rejected, if it shows serious omissions, alterations in form, additions not called for, conditions or unauthorized alternates, or irregularities of any kind. The City reserves the right to reject any or all proposals and to waive such technical errors as may be deemed best for the interests of the City.

BID PROTEST PROCEDURE: Any proposer or bidder who is not recommended for award of a contract and who alleges a failure by the City to follow the City's procurement ordinance or any applicable law may protest to the Procurement Division – Deputy Director of Finance, by delivering a letter of protest within five (5) days after a Notice of Intent to award is posted on the City's website at the following link: http://www.fortlauderdale.gov/departments/finance/procurement-services/notices-of-intent-to-award.

The complete protest ordinance may be found on the City's website at the following link: https://library.municode.com/fl/fort_lauderdale/codes/code_of_ordinances?nodeId=COOR_CH2AD_ARTVFI_DIV2PR_S2-182DIREPR

WITHDRAWALS - Any bidder may, without prejudice to himself, withdraw his proposal at any time prior to the expiration of the time during which proposals may be submitted. Such request for withdrawal must be in writing and signed in the same manner and by the same person who signed the proposal. After expiration of the period for receiving proposals, no proposal can be withdrawn, modified, or explained.

CONTRACT - The bidder to whom award is made shall execute a written contract to do the work and maintain the same in good repair until final acceptance by the proper authorities, and shall furnish good and sufficient bonds as specified within ten (10) days after receiving such contract for execution. If the bidder to whom the first award is made fails to enter into a contract as provided, the award may be annulled and the contract let to the next lowest bidder who is reliable, responsible, and responsive

INSTRUCTIONS TO BIDDERS (continued)

in the opinion of the City Commission, and that bidder shall fulfill every stipulation and obligation as if such bidder were the original party to whom award was made.

The contract shall provide that the Contractor agrees to correct any defective or faulty work or material, which may appear within one (1) year after completion of the work and receipt of final payment.

ENFORCEMENT OF SPECIFICATIONS - Copies of the specifications will be placed in the hands of all the assistants to the Engineer and Inspectors employed on the work, who shall enforce each and every requirement of the contract. Such assistants shall have no authority to vary from such requirements.

COPIES OF DRAWING PLANS – Bidding blanks may be obtained **free of charge** at BIDSYNC.COM.

SURETY BOND – The Contractor shall execute and record in the public records of Broward County, Florida, a payment and performance bond in an amount at least equal to the Contract Price with a surety insurer authorized to do business in the State of Florida as surety, ("Bond"), in accordance with Section 255.05, Florida Statutes (2018), as may be amended or revised, as security for the faithful performance and payment of all of the Contractor's obligations under the Contract Documents.

The successful bidder shall furnish a performance and payment bond in compliance with Section 255.05, Florida Statutes, written by a Corporate Surety company, holding a Certificate of Authority from the Secretary of the Treasury of the United States as acceptable sureties on federal bonds, in an amount equal to the total amount payable by the terms of the contract, executed and issued by a Resident Agent licensed by and having an office in the State of Florida, representing such Corporate Surety, conditioned for the due and faithful performance of the work, and providing in addition to all other conditions, that if the Contractor, or his or its subcontractors, fail to duly pay for any labor, materials, or other supplies used or consumed by such Contractor, or his or its subcontractor or subcontractors, in performance of the work contracted to be done, the Surety will pay the same in the amount not exceeding the sum provided in such bonds, together with interest at the rate of fifteen percent (15%) per annum, and that they shall indemnify and save harmless the City of Fort Lauderdale to the extent of any and all payments in connection with carrying out of the contract, which the City may be required to make under the law.

The Contractor is required at all times to have a valid surety bond in force covering the work being performed. A failure to have such bond in force at any time shall constitute a default on the part of the Contractor. A bond written by a surety, which becomes disqualified to do business in the State of Florida, shall automatically constitute a failure on the part of the Contractor to meet the above requirements.

Such bond shall continue in effect for one (1) year after completion and acceptance of the work with liability equal to at least twenty-five percent (25%) of contract price, or an additional bond shall be conditioned that the Contractor will correct any defective or faulty work or material which appear within one (1) year after completion of the contract, upon notification by the City, except in contracts which are concerned solely with demolition work, in which cases twenty-five percent (25%) liability will not be applicable.

AUDIT OF CONTRACTOR'S RECORDS - Upon execution of the Contract, the City reserves the right to conduct any necessary audit of the Contractor's records. Such an audit, or audits, may be conducted by the City or its representatives at any time prior to final payment, or thereafter, for a period up to three (3) years. The City may also require submittal of the records from either the Contractor, the Subcontractor, or both. For the purpose of this Section, records shall include all books

INSTRUCTIONS TO BIDDERS (continued)

of account, supporting documents and papers deemed necessary by the City to assure compliance with the contract provisions.

Failure of the Contractor or Subcontractor to comply with these requirements may result in disqualification or suspension from bidding for future contracts or disapproval as a Subcontractor at the option of the City.

The Contractor shall assure that each of its Subcontractors will provide access to its records pertaining to the project upon request by the City.

PERIODIC ESTIMATE FOR PARTIAL PAYMENT - After the Contractor has submitted a periodic estimate for partial payment, approved and certified by the Public Works Department, the City shall make payment in the manner provided in the Contract Documents and in accordance with Florida's Prompt Payment Act, Section 218, Florida Statutes.

RESERVATION FOR AWARD AND REJECTION OF BIDS - The City reserves the right to accept or reject any or all bids, part of bids, and to waive minor irregularities or variations to specifications contained in bids, and minor irregularities in the bidding process. The City also reserves the right to award the contract on a split order basis, lump sum basis, individual item basis, or such combination as shall best serve the interest of the City. The City reserves the right to make an award to the responsive and responsible bidder whose product or service meets the terms, conditions, and specifications of the ITB and whose bid is considered to best serve the City's interest. In determining the responsiveness of the offer and the responsibility of the Bidder, the following shall be considered when applicable: the ability, capacity and skill of the Bidder to perform as required; whether the Bidder can perform promptly, or within the time specified, without delay or interference; the character, integrity, reputation, judgment, experience and efficiency of the Bidder; the quality of past performance by the Bidder; the previous and existing compliance by the Bidder with related laws and ordinances; the sufficiency of the Bidder's financial resources; the availability, quality and adaptability of the Bidder's supplies or services to the required use; the ability of the Bidder to provide future maintenance, service or parts; the number and scope of conditions attached to the bid.

EARLY PROJECT COMPLETION INCENTIVE
The City reserves the right to or not to negotiate an incentive program with the awarded vendor for timely completion. The City is under no obligation to offer such an incentive.

MINORITY AND WOMEN BUSINESS ENTERPRISE PARTICIPATION AND BUSINESS - It is the desire of the City of Fort Lauderdale to increase the participation of minority (MBE) and women-owned (WBE) businesses in its contracting and procurement programs. While the City does not have any preference or set aside programs in place, it is committed **to a policy of equitable participation for these firms.** The City of Fort Lauderdale wants to increase the participation of Minority Business Enterprises (MBE), Women Business Enterprises (WBE), and Small Business Enterprises (SBE) in its procurement activities. If your firm qualifies in accordance with the below definitions please indicate in the space provided in this ITB.

Minority Business Enterprise (MBE) "A Minority Business" is a business enterprise that is owned or controlled by one or more socially or economically disadvantaged persons. Such disadvantage may arise from cultural, racial, chronic economic circumstances or background or other similar cause. Such persons include, but are not limited to: Blacks, Hispanics, Asian Americans, and Native Americans.

The term "Minority Business Enterprise" means a business at least fifty-one percent (51%) of which is owned by minority group members or, in the case of a publicly owned business, at least fifty-one percent (51%) of the stock of which is owned by minority group members. For the purpose of the

INSTRUCTIONS TO BIDDERS (continued)

preceding sentence, minority group members are citizens of the United States who include, but are not limited to: Blacks, Hispanics, Asian Americans, and Native Americans.

Women Business Enterprise (WBE) a "Women Owned or Controlled Business" is a business enterprise at least fifty-one percent (51%) of which is owned by females or, in the case of a publicly owned business, at least fifty-one percent (51%) of the stock of which is owned by females.

Small Business Enterprise (SBE) "Small Business" means a corporation, partnership, sole proprietorship, or other legal entity formed for the purpose of making a profit, which is independently owned and operated, has either fewer than 100 employees or less than $1,000,000 in annual gross receipts.

BLACK includes persons having origins in any of the Black racial groups of Africa.

WHITE includes persons whose origins are Anglo-Saxon and Europeans and persons of Indo-European decent including Pakistani and East Indian.

HISPANIC includes persons of Mexican, Puerto Rican, Cuban, Central and South American, or other Spanish culture or origin, regardless of race.

NATIVE AMERICAN includes persons whose origins are American Indians, Eskimos, Aleuts, or Native Hawaiians.

ASIAN AMERICAN includes persons having origin in any of the original peoples of the Far East, Southeast Asia, the Indian subcontinent, or the Pacific Islands.

DEBARRED OR SUSPENDED BIDDERS OR PROPOSERS - The bidder or proposer certifies, by submission of a response to this solicitation, that neither it nor its principals and subcontractors are presently debarred or suspended by any Federal department or agency.

LOBBYING ACTIVITIES - **ALL CONTRACTORS PLEASE NOTE**: Any contractor submitting a response to this solicitation must comply, if applicable, with City of Fort Lauderdale Ordinance No. C-00-27 & Resolution No. 07-101, Lobbying Activities. Copies of Ordinance No., C-00-27, and Resolution No. 07-101, may be obtained from the City Clerk's Office on the 7th Floor of City Hall, 100 N. Andrews Avenue, Fort Lauderdale, Florida 33301. The ordinance may also be viewed on the City's website at http://www.fortlauderdale.gov/clerk/LobbyistDocs/lobbyist_ordinance.pdf.

For questions concerning whether you may or may not comply with said Ordinance, please contact the City of Fort Lauderdale City Clerk's Office at 954-828-5002.

SPECIAL CONDITIONS

1. PURPOSE

The City of Fort Lauderdale, Florida (City) is seeking bids from qualified bidders, hereinafter referred to as the Contractor, to provide construction services, in accordance with the terms, conditions, and specifications contained in this Invitation To Bid (ITB).

2. TRANSACTION FEES

The City uses BidSync (www.bidsync.com) to distribute and receive bids and proposals. There is no charge to vendors/contractors to register and participate in the solicitation process, nor will any fees be charged to the awarded contractor.

3. SUBMISSION OF BIDS

It is the sole responsibility of the Contractor to ensure that their bid is submitted electronically through BidSync at www.bidsync.com, and that any bid security not submitted via BidSync reaches the City of Fort Lauderdale, Procurement Services Division, 6th floor, Room 619, 100 N. Andrews Avenue, Fort Lauderdale, Florida 33301, in a sealed envelope marked on the outside with the ITB solicitation number and Contractor's name, no later than the time and date specified in this solicitation. **PAPER BID SUBMITALS WILL NOT BE ACCEPTED. PLEASE SUBMIT YOUR BID RESPONSE ELECTRONICALLY.**

4. INFORMATION OR CLARIFICATION

For information concerning procedures for responding to this solicitation, contact **Penelope Burger**, **Procurement Administrator**, at (954) 828-5189 or email at pburger@fortlauderdale.gov. Such contact shall be for clarification purposes only.

For information concerning technical specifications please utilize the Question/Answer feature provided by BidSync at www.bidsync.com. Questions of a material nature must be received prior to the cut-off date specified in the solicitation. Material changes, if any, to the scope of services or bidding procedures will only be transmitted by written addendum. (See addendum section of BidSync Site). **Contractors please note**: No part of your bid can be submitted via FAX. No variation in price or conditions shall be permitted based upon a claim of ignorance. Submission of a bid will be considered evidence that the Contractor has familiarized himself with the nature and extent of the work, and the equipment, materials, and labor required. The entire bid response must be submitted in accordance with all specifications contained in this solicitation. The questions and answers submitted in BidSync shall become part of any contract that is created from this ITB.

5. CONTRACT TIME

5.1 The Contractor recognizes that TIME IS OF THE ESSENCE. The Work shall commence within **14** calendar days (**10 working days**) of the date of the Notice to Proceed.

5.2 The Work shall be Substantially Completed within **315** calendar days (**225 working days**) after the date when the Contract Time commences to run as provided in the Notice to Proceed.

5.3 The Work shall be finally completed on the Final Completion Date and ready for final payment in accordance with this Agreement within **345** calendar days (**247 working days**) after the date when the Contract Time commences to run as provided in the Notice to Proceed.

The City reserves the right to waive any informality in any bid and to reject any or all bids. The City reserves the right to reduce or delete any of the bid items.

At time of award of contract, the City reserves the right to set a maximum dollar limit that may be expended on this Project. Contract quantities of any or all items may be increased, reduced, or eliminated to adjust the contract amount to coincide with the amount of work necessary or to bring the contract value to within the established limit. All quantities are estimated and the City reserves the right to increase, reduce, or eliminate the contract quantities in any amount.

The undersigned bidder affirms that he has or will obtain all equipment necessary to complete the work described, that he has or will obtain all required permits and licenses from the appropriate agencies, and that his firm is authorized to do business in the State of Florida.

6. BID SECURITY

A certified check, cashier's check, bank officer's check or bid bond for **FIVE percent (5%)** of the bid amount, made payable to the City of Fort Lauderdale, Florida, shall accompany each proposal.

7. REQUIRED LICENSES/CERTIFICATIONS

Licensing Requirements: Possession of a certified general contractor license issued by the Florida Department of Business and Professional Regulation is required for this Project.

Note: Contractor must have proper licensing and provide evidence of same at time of bid submission.

8. SPECIFIC EXPERIENCE REQUIRED

The following expertise is required to be considered for this contract. Specific references attesting to this expertise must be submitted with bid.

The contractor shall have at least five (5) years previous construction experience in constructing wastewater pump stations and related additions/modifications in the State of Florida. Bidder shall submit proof of construction experience for a minimum of three (3) projects of similar scope and scale (or larger) and shall, for each project listed, identify location; dates of construction; project name and overall scope; project cost; scope of work that was self-performed by contractor; and client's name, address, telephone number and e-mail address.

NOTE: REFERENCES SHALL NOT INCLUDE ONLY CITY OF FORT LAUDERDALE EMPLOYEES OR WORK PERFORMED FOR THE CITY. THE CITY IS ALSO INTERESTED IN WORK EXPERIENCE AND REFERENCES FROM ENTITIES OTHER THAN THE CITY OF FORT LAUDERDALE.

By signing this bid solicitation, contractor is affirming that this expertise will be provided for this contract at no additional charge.

9. BID ALLOWANCE

Allowance for permits: Payments will be made to the contractor based on the actual cost of permits upon submission of paid permit receipts. The City shall not pay for other costs related to obtaining or securing permits.

The amount indicated is intended to be sufficient to cover the entire project. If the City Permit fees exceed the allowance indicated, the City will reimburse the contractor the actual amount of City Permit Fees required for project completion.

Allowances	$
FPL, AT&T allowance	100,000
Permit fee allowance	50,000
Other: Landscape and Irrigation	15,000
TOTAL	**$165,000**

Note: The City will add this allowance to your bid.

10. INSURANCE REQUIREMENTS *(See Article 10, Bonds and Insurance, of the Contract for details)*

10.1 As a condition precedent to the effectiveness of this Agreement, during the term of this Agreement and during any renewal or extension term of this Agreement, the

Contractor, at the Contractor's sole expense, shall provide insurance of such types and with such terms and limits as noted below. Providing proof of and maintaining adequate insurance coverage are material obligations of the Contractor. The Contractor shall provide the City a certificate of insurance evidencing such coverage. The Contractor's insurance coverage shall be primary insurance for all applicable policies. The limits of coverage under each policy maintained by the Contractor shall not be interpreted as limiting the Contractor's liability and obligations under this Agreement. All insurance policies shall be from insurers authorized to write insurance policies in the State of Florida and that possess an A.M. Best rating of A-, VII or better. All insurance policies are subject to approval by the City's Risk Manager.

The coverages, limits, and endorsements required herein protect the interests of the City, and these coverages, limits, and endorsements may not be relied upon by the Contractor for assessing the extent or determining appropriate types and limits of coverage to protect the Contractor against any loss exposure, whether as a result of this Agreement or otherwise. The requirements contained herein, as well as the City's review or acknowledgement, are not intended to and shall not in any manner limit or qualify the liabilities and obligations assumed by the Contractor under this Agreement.

The following insurance policies and coverages are required:

10.1.1 Commercial General Liability

Coverage must be afforded under a Commercial General Liability policy with limits not less than:

- $1,000,000 each occurrence and $2,000,000 aggregate for Bodily Injury, Property Damage, and Personal and Advertising Injury
- $1,000,000 each occurrence and $2,000,000 aggregate for Products and Completed Operations

Policy must include coverage for Contractual Liability and Independent Contractors.

The City and the City's officers, employees, and volunteers are to be covered as additional insureds with a CG 20 26 04 13 Additional Insured – Designated Person or Organization Endorsement or similar endorsement providing equal or broader Additional Insured Coverage with respect to liability arising out of activities performed by or on behalf of the Contractor. The coverage shall contain no special limitation on the scope of protection afforded to the City or the City's officers, employees, and volunteers.

10.1.2 Business Automobile Liability

Coverage must be afforded for all Owned, Hired, Scheduled, and Non-Owned vehicles for Bodily Injury and Property Damage in an amount not less than $1,000,000 combined single limit each accident.

If the Contractor does not own vehicles, the Contractor shall maintain coverage for Hired and Non-Owned Auto Liability, which may be satisfied by way of endorsement to the Commercial General Liability policy or separate Business Auto Liability policy.

10.1.3 Workers' Compensation and Employer's Liability
Coverage must be afforded per Chapter 440, Florida Statutes. Any person or entity performing work for or on behalf of the City must provide Workers' Compensation insurance. Exceptions and exemptions will be allowed by the City's Risk Manager, if they are in accordance with Florida Statute.

The Contractor waives, and the Contractor shall ensure that the Contractor's insurance carrier waives, all subrogation rights against the City and the City's officers, employees, and volunteers for all losses or damages. The City requires the policy to be endorsed with WC 00 03 13 Waiver of our Right to Recover from Others or equivalent.

The Contractor must be in compliance with all applicable State and federal workers' compensation laws, including the U.S. Longshore Harbor Workers' Act and the Jones Act, if applicable.

10.1.4 Umbrella/Excess Liability: The Contractor shall provide umbrella/excess coverage with limits of no less than $2,000,000 excess of Commercial General Liability, Automobile Liability and Employer's Liability.

10.1.5 Crane and Rigging Liability
Coverage must be afforded for any crane operations under the Commercial General or Business Automobile Liability policy as necessary, in line with the limits of the associated policy.

10.1.6 Contractor's Pollution Liability Coverage
For sudden and gradual occurrences and in an amount not less than $1,000,000 per claim arising out of this Agreement, including but not limited to, all hazardous materials identified under the Agreement.

Insurance Certificate Requirements

a. The Contractor shall provide the City with valid Certificates of Insurance (binders are unacceptable) no later than thirty (30) days prior to the start of work contemplated in this Agreement.
b. The Contractor shall provide to the City a Certificate of Insurance having a thirty (30) day notice of cancellation; ten (10) days' notice if cancellation is for nonpayment of premium.
c. In the event that the insurer is unable to accommodate the cancellation notice requirement, it shall be the responsibility of the Contractor to provide the proper notice. Such notification will be in writing by registered mail, return receipt requested, and addressed to the certificate holder.
d. In the event the Agreement term goes beyond the expiration date of the insurance policy, the Contractor shall provide the City with an updated Certificate of Insurance no later than ten (10) days prior to the expiration of the insurance currently in effect. The City reserves the right to suspend the Agreement until this requirement is met.
e. The Certificate of Insurance shall indicate whether coverage is provided under a claims-made or occurrence form. If any coverage is provided on a claims-made form, the Certificate of Insurance must show a retroactive date, which shall be the effective date of the initial contract or prior.

f. The City shall be named as an Additional Insured on all liability policies, with the exception of Workers' Compensation.
g. The City shall be granted a Waiver of Subrogation on the Contractor's Workers' Compensation insurance policy.
h. The title of the Agreement, Bid/Contract number, event dates, or other identifying reference must be listed on the Certificate of Insurance.

The Certificate Holder should read as follows:
City of Fort Lauderdale
100 N. Andrews Avenue
Fort Lauderdale, FL 33301

The Contractor has the sole responsibility for the payment of all insurance premiums and shall be fully and solely responsible for any costs or expenses as a result of a coverage deductible, co-insurance penalty, or self-insured retention; including any loss not covered because of the operation of such deductible, co-insurance penalty, self-insured retention, or coverage exclusion or limitation. Any costs for adding the City as an Additional Insured shall be at the Contractor's expense.

If the Contractor's primary insurance policy/policies do not meet the minimum requirements, as set forth in this Agreement, the Contractor may provide evidence of an Umbrella/Excess insurance policy to comply with this requirement.

The Contractor's insurance coverage shall be primary insurance as applied to the City and the City's officers, employees, and volunteers. Any insurance or self-insurance maintained by the City covering the City, the City's officers, employees, or volunteers shall be non-contributory.

Any exclusion or provision in the insurance maintained by the Contractor that excludes coverage for work contemplated in this Agreement shall be unacceptable and shall be considered breach of contract.

All required insurance policies must be maintained until the contract work has been accepted by the City, or until this Agreement is terminated, whichever is later. Any lapse in coverage shall be considered breach of contract. In addition, Contractor must provide to the City confirmation of coverage renewal via an updated certificate should any policies expire prior to the expiration of this Agreement. The City reserves the right to review, at any time, coverage forms and limits of Contractor's insurance policies.

The Contractor shall provide notice of any and all claims, accidents, and any other occurrences associated with this Agreement shall be provided to the Contractor's insurance company or companies and the City's Risk Management office as soon as practical.

It is the Contractor's responsibility to ensure that any and all of the Contractor's independent contractors and subcontractors comply with these insurance requirements. All coverages for independent contractors and subcontractors shall be subject to all of the applicable requirements stated herein. Any and all deficiencies are the responsibility of the Contractor.

NOTE: CITY PROJECT NUMBER, PROJECT NAME, AND BID NUMBER MUST APPEAR ON EACH CERTIFICATE, AND THE CITY OF FORT LAUDERDALE MUST BE NAMED ON THE CERTIFICATE

AS AN "ADDITIONAL INSURED" ON GENERAL LIABILITY AND PROFESSIONAL LIABILITY POLICIES.

A Sample Insurance Certificate shall be included with the proposal to demonstrate the firm's ability to comply with insurance requirements. Provide a previous certificate or other evidence listing the insurance companies' names for all required coverage, and the dollar amounts of the coverage.

11. PERFORMANCE AND PAYMENT BOND: 100%

Number of awards anticipated: 1

12. CITY PROJECT MANAGER

The Project Manager is hereby designated by the City as **Rohan Punit, P.E.** whose address is **101 NE 3rd Avenue, Suite #1420, Fort Lauderdale, FL 33301**, telephone number: **(954) 828-5859**, and e-mail address is **rpunit@fortlauderdale.gov**. The Project Manager will assume all duties and responsibilities and will have the rights and authorities assigned to the Project Manager in the Contract Documents in connection with completion of the Work in accordance with this Agreement.

13. LIQUIDATED DAMAGES *(See Article 16, Liquidated Damages, of the Contract for details)*

Upon failure of the Contractor to complete the Work within the time specified for completion, the Contractor shall pay to the City the sum of **Two Thousand Dollars ($2,000.00)** for each and every calendar day that the completion of the Work is delayed beyond the time specified in this Agreement for completion, as fixed and agreed liquidated damages and not as a penalty, so long as the delay is caused by the Contractor. (See Article 16, Liquidated Damages Clause, of the Contract)

14. PAYMENT (*See Article 7, Payment, of the Contract for other details*)

The City shall make payment to the Contractor through utilization of the City's P-Card Program. The City has implemented a Purchasing Card (P-Card) Program utilizing both VISA or MASTERCARD networks. Purchases from this contract will be made utilizing the City's Purchasing Card. Contractor will receive payment from the purchasing card in the same manner as other credit card purchases. Accordingly, bidders must presently have the ability to accept this credit card or take whatever steps necessary to implement the ability before the start of the contract term, or contract award by the City. All costs associated with the Contractor's participation in this purchasing program shall be borne by the Contractor. The City reserves the right to revise this program as necessary.

15. WORK SCHEDULE (including overtime hours):

Regular work hours: **8:00 am to 6:00 pm, Monday through Friday.**
City Inspector Hours: **8:00 am to 4:30 pm, Monday through Friday.**

Any inspection requested by the contractor outside the City Inspector Hours will be considered overtime to be paid by the Contractor.

16. INSPECTION OVERTIME COST: $100/hour

CITY OF FORT LAUDERDALE
CONSTRUCTION AGREEMENT

THIS AGREEMENT made and entered into this _____ day of _____, 2019, by and between the City of Fort Lauderdale, a Florida municipal corporation (City) and_____, (Contractor), (parties);

WHEREAS, the City desires to retain a contractor for the Project as expressed in its Invitation to Bid No.,_____, Project Number,_____, which was opened on _____; and,

WHEREAS, the Contractor has expressed its willingness and capability to perform the necessary work to accomplish the Project.

NOW, THEREFORE, the City and the Contractor, in consideration of the mutual covenants and conditions contained herein and for other good and valuable consideration, the receipt and sufficiency is hereby acknowledged, agree as follows:

ARTICLE 1 – DEFINITIONS

Whenever used in this Agreement or in other Contract Documents, the following terms have the meanings indicated which are applicable to both the singular and plural forms:

1.1 Agreement – This written Agreement between the City and the Contractor covering the work to be performed including other Contract Documents that are attached to or incorporated in the Agreement.

1.2 Application for Payment – The form accepted by the City which is to be used by the Contractor in requesting progress or final payment and which is to include such supporting documentation as is required by the Contract Documents.

1.3 Approve – The word approve is defined to mean review of the material, equipment or methods for general compliance with design concepts and with the information given in the Contract Documents. It does not imply a responsibility on the part of the City to verify in every detail conformance with plans and specifications.

1.4 Bid – The offer or Bid of the Contractor submitted on the prescribed form setting forth the total prices for the Work to be performed.

1.5 Bid Documents –This Agreement, advertisement for Invitation to Bids, the Instructions to Bidders, the Bid Form (with supplemental affidavits and agreements), the Contract Forms, General Conditions, the Supplementary Conditions, the Specifications, and the Plans, which documents all become an integral part of the Contract Documents.

1.6 Certificate of Substantial Completion - Certificate provided by the City certifying that all Work, excluding the punch list items, has been completed, inspected, and accepted by the City.

1.7 Change Order - A change order is defined as a written order to a contractor approved by the City, authorizing a revision of an underlying agreement between the City and a contractor that is directly related to the original scope of work or an adjustment in the original contract price or the contract time directly related to the original scope of work, issued on or after the effective date of the contract.

1.8 City – The City of Fort Lauderdale, Florida, including but not limited to its employees, agents, officials, representatives, contractors, subcontractors, volunteers, successors and assigns, with whom the Contractor has entered into the Agreement and for whom the Work is to be provided.

1.9 Contract Documents – The Contract Documents shall consist of this Agreement, Exhibits to this Agreement, Public Construction Bond, Performance Bond, Payment Bond and Certificates of Insurance, Notice of Award and Notice to Proceed, General Conditions as amended by the Special Conditions, Technical Specifications, Plans/Drawings, Addenda, Bid Form and supplement Affidavits and Agreements, all applicable provisions of State and Federal Law and any modification, including Change Orders or written amendments duly delivered after execution of Agreement, Invitation to Bid, Instructions to Bidders and Bid Bond, Contractor's response to the City's Invitation to Bid, Schedule of Completion, Schedule of Values, all amendments, modifications and supplements, change orders and work directive changes issued on or after the Effective Date of the Agreement, as well as any additional documents that are required to be submitted under the Agreement.

Permits on file with the City and or those permits to be obtained shall be considered directive in nature and will be considered a part of this Agreement. A copy of all permits shall be given to the City for inclusion in the Contract Documents. Terms of permits shall be met prior to acceptance of the Work and release of the final payment.

1.10 Contract Price – The monies payable to the Contractor by the City under the Contract Documents and in accordance with the line item unit prices listed in the Bid.

1.11 Contract Time – The number of calendar days stated in the Agreement for the completion of the Work. The dates on which the work shall be started and shall be completed as stated in the Notice to Proceed.

1.12 Contractor – The person, firm, company, or corporation with whom the City has entered into the Agreement, including but not limited to its employees, agents, representatives, contractors, subcontractors, their subcontractors and their other successors and assigns.

1.13 Day – A calendar day of twenty-four (24) hours ending at midnight.

1.14 Defective – An adjective which when modifying the word "Work" refers to work that is unsatisfactory, faulty, or deficient, or does not conform to the Contract Documents or does not meet the requirements of any inspection, test or approval referred to in the Contract Documents, or has been damaged prior to the Project Manager's recommendation of final payment.

1.15 Effective Date of the Agreement – The effective date of the agreement shall be the date the City Commission approves the work. The contractor shall provide all required payment and performance bonds and insurances to the City within ten (10) calendar days following the City Commission approval. Upon verification of all bonds and insurances, the City will issue a notice to proceed (NTP) to the Contractor. Contract time will commence on the date when the Notice to Proceed is issued. The Contractor shall commence the work immediately upon receipt of the Notice to Proceed. Failure of the contractor to proceed with the work will constitute non-performance of the Contractor and would be ground for termination of the contract per ARTICLE 17 of the Agreement.

1.16 Final Completion Date – The date the Work is completed, including completion of the final punch list, and delivered along with those items specified in the Contract Documents and is accepted by the City.

1.17 Hazardous Materials (HAZMAT) - Any solid, liquid, or gaseous material that is toxic, flammable, radioactive, corrosive, chemically reactive, or unstable upon prolonged storage in quantities that could pose a threat to life, property, or the environment defined in Section 101(14) of Comprehensive Environmental Response, Compensation and Liability Act of 1980 and in 40 CFR 300.6. Also defined by 49 CFR 171.8 as a substance or material designated by the Secretary of Transportation to be capable of posing an unreasonable risk to health, safety, and property when transported in commerce and which has been so designated.

1.18 Hazardous Substance - As defined by Section 101(14) of the Comprehensive Environmental Response, Compensation and Liability Act; any substance designated pursuant to Section 311(b) (2) (A) of the Clean Water Act; any element, compound, mixture, solution or substance designated pursuant to Section 102 identified under or listed pursuant to Section 3001 of the Solid Waste Disposal Act {but not including any waste listed under Section 307[a] of the Clean Water Act}; any hazardous air pollutant listed under Section 112 of the Clean Air Act; and any imminently hazardous chemical substance or mixture pursuant to Section 7 of the Toxic Substances Control Act. The term does not include petroleum, including crude oil or any fraction thereof, which is not otherwise specifically listed or designated as a hazardous substance in the first sentence of this paragraph, and the term does not include natural gas, natural gas liquids, liquefied natural gas, or synthetic gas usable for fuel (or mixtures of natural gas and such synthetic gas).

1.19 Hazardous Waste - Those solid wastes designated by OSHA in accordance with 40 CFR 261 due to the properties of ignitability, corrosivity, reactivity, or toxicity. Any material that is subject to the Hazardous Waste Manifest requirements of the EPA specified in 40 CFR Part 262.

1.20 Holidays - Those designated non-work days as established by the City Commission of the City of Fort Lauderdale.

1.21 Inspection – The term “inspection” and the act of inspecting as used in this Agreement is defined to mean the examination of construction to ensure that it conforms to the design concept expressed in the plans and specifications. This term shall not be construed to mean supervision, superintending and/or overseeing.

1.22 Notice of Award - The written notice by City to the Contractor stating that upon compliance by the Contractor with the conditions precedent enumerated therein, within the time specified that the City will sign and deliver this Agreement.

1.23 Notice to Proceed – A written notice given by the City to the Contractor fixing the date on which the Contract Time will commence to run and on which the Contract Time will end.

1.24 Plans - The drawings which show the character and scope of the work to be performed and which have been prepared or approved by the City and are referred to in the Contract Documents.

1.25 Premises (otherwise known as Site or Work Site) – means the land, buildings, facilities, etc. upon which the Work is to be performed.

1.26 Project – The total construction of the Work to be provided as defined in the Contract Documents.

1.27 Project Manager - The employee of the City, or other designated individual who is herein referred to as the Project Manager, will assume all duties and responsibilities and will have the rights and authorities assigned to the Project Manager in the contract Documents in connection with completion of the Work in accordance with this Agreement. The Project Manager, or designee, shall be the authorized agent for the City unless otherwise specified.

1.28 Punch List - The City's list of Work yet to be done or be corrected by the Contractor, before the Final Completion date can be determined by the City.

1.29 Record Documents - A complete set of all specifications, drawings, addenda, modifications, shop drawings, submittals and samples annotated to show all changes made during the construction process.

1.30 Record Drawings or "As-Builts" - A set of drawings which show significant changes in the work made during construction and which are usually based on drawings marked up in the field and other data furnished by the contractor. These documents will be signed and sealed by the Engineer of Record or a Professional Land Surveyor licensed in the State of Florida.

1.31 Substantially Completed Date – A date when the Contractor has requested in writing, stating that the Work is substantially completed and is ready for an inspection and issuance of a final punch list for the Project.

1.32 Work – The entire completed delivered product or the various separately identifiable parts thereof required to be furnished under the Contract Documents. Work is the result of performing services, furnishing labor and furnishing and incorporating material and equipment into the product, all as required by the Contract Documents.

ARTICLE 2 – SCOPE OF WORK

2.1 The Contractor shall complete all work as specified or indicated in the Contract Documents. The Project for which the Work under the Contract Documents may be the whole or only part is generally described as follows:

REPLACEMENT OF PUMP STATION D-38 ITB 12305-493 PROJECT 12390

2.2 All Work for the Project shall be constructed in accordance with the Drawings and Specifications. The Work generally involves:

PROJECT DESCRIPTION

This project is located at Pump Station D-38 at the intersection of SE 25th Avenue and Las Olas Boulevard, in the City of Fort Lauderdale. The work to be accomplished under this contract includes, but is not limited to, the furnishing of all labor, materials, equipment, services, and incidentals for the additions and modifications of the submersible Pump Station D-38. This project also includes coordination with Florida Power & Light for upgrades to existing electrical service.

2.3 Within ten (10) days of the execution of this Agreement, the Contractor shall submit a Construction Schedule, Schedule of Values and a listing of those subcontractors that will be utilized by the Contractor. The general sequence of the work shall be submitted by the Contractor and approved by the City before any work commences. The City reserves the right to issue construction directives necessary to facilitate the Work or to minimize any conflict with operations.

ARTICLE 3 – PROJECT MANAGER

3.1 The Project Manager is hereby designated by the City as **Rohan Punit, P.E.**, whose address is **101 NE 3rd Avenue, Suite #1420, Fort Lauderdale, FL 33301**, telephone number: **(954) 828-5859**, and email address is rpunit@fortlauderdale.gov. The Project Manager will assume all duties and responsibilities and will have the rights and authorities assigned to the Project Manager in the Contract Documents in connection with completion of the Work in accordance with this Agreement.

ARTICLE 4 – CONTRACT DOCUMENTS

The Contract Documents which comprise the entire Agreement between the City and Contractor are attached to this Agreement, are made a part hereof and consist of the following:

4.1 This Agreement.

4.2 The Contract Documents may only be altered, amended, or repealed in accordance with the specific provisions of the terms of this Agreement.

4.3 Exhibits to this Agreement: (Plans sheets [ ] to [ ] inclusive).

4.4 Public Construction Bond, Performance Bond, Payment Bond and Certificates of Insurance.

4.5 Notice of Award and Notice to Proceed.

4.6 General Conditions as amended by the Special Conditions.

4.7 Technical Specifications.

4.8 Plans/Drawings - Drawing File No., **43194-007**, twenty-five **(25)** sheets.

4.9 Addenda number _____ through _____, inclusive.

4.10 Bid Form and supplement Affidavits and Agreements.

4.11 All applicable provisions of State and Federal Law.

4.12 Invitation to Bid No., _____, Instructions to Bidders, and Bid Bond.

4.13 Contractor's response to the City's Invitation to Bid No., _____, dated _____.

4.14 Schedule of Completion and Schedule of Values.

4.15 All amendments, modifications and supplements, change orders and work directive changes issued on or after the Effective Date of the Agreement.

4.16 Any additional documents that are required to be submitted under the Agreement.

4.17 Permits on file with the City and or those permits to be obtained shall be considered directive in nature and will be considered a part of this Agreement. A copy of all permits shall be given to the City for inclusion in the Contract Documents. Terms of permits shall be met prior to acceptance of the Work and release of the final payment.

In the event of any conflict between the documents or any ambiguity or missing specification or instruction, the following priority is established:

a. Specific direction from the City Manager (or designee).

b. Approved change orders, addenda or amendments.

c. Specifications (quality) and Drawings (location and quantity).

d. Supplemental conditions or special terms.

e. General Terms and Conditions.

f. This Agreement dated_____, and any attachments.

g. Invitation to Bid No.,_____, and the specifications prepared by the City.

h. Contractor's response to the City's Invitation to Bid No.,_____, dated _____.

i. Schedule of Values.

j. Schedule of Completion.

If during the performance of the Work, Contractor finds a conflict, error or discrepancy in the Contract Documents, Contractor shall so report to the Project Manager, in writing, at once and before proceeding with the Work affected shall obtain a written interpretation or clarification from the City.

It is the intent of the specifications and plans to describe a complete Project to be constructed in accordance with the Contract Documents. Any Work that may reasonably be inferred from the specifications or plans as being required to produce the intended result shall be supplied whether or not it is specifically called for. When words which have a well-known technical or trade meaning are used to describe Work, materials, or equipment, such works shall be interpreted in accordance with such meaning. Reference to standard specifications, manuals or codes of any technical society, organization or associations, or to the code of any governmental authority whether such reference be specific or implied, shall mean the latest standard specification, manual or code in effect as of the Effective Date of this Agreement, except as may be otherwise specifically stated. However, no provision of any referenced standard specification, manual or code (whether or not specifically incorporated by reference in the Contract Documents) shall change the duties and responsibilities of the City, the Contractor, or any of their agents or employees from those set forth in the Contract Documents.

ARTICLE 5 – CONTRACT TIME

5.1 The Contractor recognizes that **TIME IS OF THE ESSENCE**. The Work shall commence within **14** calendar days (**10 working days**) of the date of the Notice to Proceed.

5.2 The Work shall be Substantially Completed within **315** calendar days (**225 working days**) after the date when the Contract Time commences to run as provided in the Notice to Proceed.

5.3 The Work shall be finally completed on the Final Completion Date and ready for final payment in accordance with this Agreement within **345** calendar days (**247 working days**) after the date when the Contract Time commences to run as provided in the Notice to Proceed.

ARTICLE 6 – CONTRACT PRICE

6.1 City shall pay Contractor for performance of the Work in accordance with Article 7, subject to additions and deletions by Change Order, as provided for in this Agreement.

6.2 The parties expressly agree that the Contract Price, which shall not exceed the amount of $_____, constitutes the total maximum compensation payable to Contractor for performing the Work, plus any Work done pursuant to a Change

Order. The Contract Price is in accordance with the line item unit prices listed in the Bid. Line items are based on a unit price cost multiplied by a defined quantity. Any additional duties, responsibilities and obligations assigned to or undertaken by Contractor shall be at Contractor's expense without change to the Contract Price.

6.3 The Contract Price constitutes the compensation payable to Contractor for performing the Work plus any Work done pursuant to a Change Order. All duties, responsibilities and obligations assigned to or undertaken by Contractor shall be at Contractor's expense without change in the Contract price.

ARTICLE 7 – PAYMENT

7.1 Contractor shall submit Applications for Payment in accordance with the Contract Documents. Applications for Payment will be processed by City as provided in the General Conditions.

7.2 Progress Payments. City shall make progress payments on account of the Contract Price on the basis of Contractor's monthly Applications for Payment, which shall be submitted by the Contractor between the first (1st) and the tenth (10th) day after the end of each calendar month for which payment is requested. All progress payments will be made on the basis of the progress of the Work completed.

7.3 Prior to Final Completion, progress payments will be made in an amount equal to ninety percent (90%) of the value of Work completed less in each case the aggregate of payments previously made.

7.4 Final Payment. Upon final completion of the Work in accordance with the General Conditions, as may be supplemented, the City shall pay Contractor an amount sufficient to increase total payments to one-hundred percent (100%) of the Contract Price. However, not less than ten percent (10%) of the Contract Price shall be retained until Record Drawings (as-builts), specifications, addenda, modifications and shop drawings, including all manufacturers' instructional and parts manuals are delivered to and accepted by the City.

7.5 City may withhold, in whole or in part, payment to such extent as may be necessary to protect itself from loss on account of:

7.5.1 Defective work not remedied.
7.5.2 Claims filed or reasonable evidence indicating probable filing of claims by other parties against Contractor or City because of Contractor's performance.
7.5.3 Failure of Contractor to make payments properly to Subcontractors or for material or labor.
7.5.4 Damage to another contractor not remedied.
7.5.5 Liquidated damages and costs incurred by Consultant for extended construction administration, if applicable.
7.5.6 Failure of Contractor to provide any and all documents required by the Contract Documents.

When the above grounds are removed or resolved satisfactory to the Project Manager, payment shall be made in whole or in part.

7.6 The City shall make payment to the Contractor in accordance with the Florida Prompt Payment Act, Section 218.70, Florida Statutes.

7.7 The City shall make payment to the Contractor through utilization of the City's P-Card Program. The City has implemented a Purchasing Card (P-Card) Program utilizing the MASTERCARD or VISA network as part of this Program. Purchases from this contract will be made utilizing the City's Purchasing Card. Contractor will receive payment from the purchasing card in the same manner as other credit card purchases. Accordingly, bidders must presently have the ability to accept these credit cards or take whatever steps necessary to implement the ability before the start of the contract term, or contract award by the City. All costs associated with the Contractor's participation in this purchasing program shall be borne by the Contractor. The City reserves the right to revise this program as necessary.

7.8 Payment Card Industry (PCI) Compliance

Contractor agrees to comply with all applicable state, federal and international laws, as well as industry best practices, governing the collection, access, use, disclosure, safeguarding and destruction of Protected Information.

Contractor and/or any subcontractor that handles credit card data must be, and remain, PCI compliant under the current standards and will provide documentation confirming compliance upon request by the City of Fort Lauderdale, failure to produce documentation could result in termination of the contract.

ARTICLE 8 – CONTRACTOR'S REPRESENTATIONS

In order to induce the City to enter into this Agreement, Contractor makes the following representations upon which the City has relied:

8.1 Contractor is qualified in the field of public construction and in particular to perform the Work and services set forth in this Agreement.

8.2 Contractor has visited the Work Site, has conducted extensive tests, examinations and investigations and represents and warrants a thorough familiarization with the nature and extent of the Contract Documents, the Work, locality, soil conditions, moisture conditions and all year-round local weather and climate conditions (past and present), and, in reliance on such tests, examination and investigations conducted by Contractor and the Contractor's experts, has determined that no conditions exist that would in any manner affect the Proposed Price and that the project can be completed for the Proposed Price submitted within the Contract Time as defined in this Agreement. Furthermore, Contractor warrants and confirms that he is totally familiar with, understands and obligates Contractor to comply with all federal, state and local laws, ordinances, rules, regulations and all market conditions that affect or may affect the cost and price of materials and labor needed to fulfill all provisions of this Agreement or that in any manner may affect cost, progress or performance of the Work.

8.3 The Contractor has satisfied itself as to the nature and location of the Work under the Contract Documents, the general and local conditions of the Project, particularly those bearing upon availability of transportation, disposal, handling and storage of materials,

availability of labor, water, electric power, and roads, the conformation and conditions at the ground based on City provided reports, the type of equipment and facilities needed preliminary to and during the prosecution of the Work and all other matters which can in any way affect the Work or the cost thereof under the Contract Documents.

8.4 The Contractor has also studied carefully all reports of investigations and tests of subsurface and latent physical conditions at the site or otherwise affecting cost, progress or performance of the Works, and finds and has further determined that no conditions exist that would in any manner affect the Proposed Price and that the project can be completed for the Proposed Price submitted.

8.5 Contractor has made or caused to be made examinations, investigations, tests and studies of such reports and related data in addition to those referred to in Paragraphs 8.2, 8.3 and 8.4 above as he deems necessary for the performance of the Work at the Contract Prices, within the Contract Time and in accordance with the other terms and conditions of the Contract Documents; and no additional examinations, investigations, tests, reports or similar data are, or will be, required by Contractor for such purposes.

8.6 Contractor has correlated the results of all such observations, examinations, investigations, tests, reports and data with the terms and conditions of the Contract Documents.

8.7 Contractor has given City written notice of all conflicts, errors or discrepancies that he has discovered in the Contract Documents and the written resolution by City is acceptable to the Contractor.

8.8 <u>Labor</u>

8.8.1 The Contractor shall provide competent, suitable qualified personnel to survey and lay out the Work and perform construction as required by the Contract Documents. The Contractor shall at all times maintain good discipline and order at the site.

8.8.2 The Contractor shall, at all times, have a competent superintendent, capable of reading and thoroughly understanding the drawings and specifications, as the Contractor's agent on the Work, who shall, as the Contractor's agent, supervise, direct and otherwise conduct the Work.

8.8.3 The Contractor shall designate the superintendent on the job to the City, in writing, immediately after receipt of the Notice to Proceed. The Contractor understands and agrees that the superintendent's physical presence on the job site is indispensable to the successful completion of the Work. If the superintendent is frequently absent from the job site, the Project Manager may deliver written notice to the Contractor to stop work or terminate the Contract in accordance with Article 17.

8.8.4 The Contractor shall assign personnel to the job site that have successfully completed training programs related to trench safety, confined space and maintenance of traffic. A certified "competent person" shall be assigned to the job site. Personnel certified by the International Municipal Signal Associations

with Florida Department of Transportation qualifications are required relative to maintenance of traffic. Failure to pursue the Work with the properly certified supervisory staff may result in notice to stop work or terminate the Contract in accordance with Article 17.

8.9 Materials:

8.9.1 The Contractor shall furnish all materials, equipment, labor, transportation, construction equipment and machinery, tools, appliances, fuel, power, light, heat, telephone, water and sanitary facilities and all other facilities and incidentals necessary for the execution, testing, initial operation and completion of Work.

8.9.2 All material and equipment shall be of good quality and new, except as otherwise provided in the Contract Documents. Suppliers shall be selected and paid by the Contractor; the City reserves the right to approve all suppliers and materials.

8.10 Work Hours: Except in connection with the safety or protection of persons, or the Work, or property at the site or adjacent thereto, and except as otherwise indicated in the Supplementary Conditions, all work at the site shall be performed during regular working hours between 8 a.m. and 5:00 p.m., Monday through Friday. The Contractor will not permit overtime work or the performance of work on Saturday, Sunday or any legal holiday (designated by the City of Fort Lauderdale) without the Project Manager's written consent at least seventy-two (72) hours in advance of starting such work. If the Project Manager permits overtime work, the Contractor shall pay for the additional charges to the City with respect to such overtime work. Such additional charges shall be a subsidiary obligation of the Contractor and no extra payment shall be made to the Contractor for overtime work**. It shall be noted that the City's Inspector work hours are from 8:00 a.m. to 4:30 p.m., Monday through Friday, and any work requiring inspection oversight being performed outside of this timeframe shall be paid for by the Contractor as Inspector overtime, at a rate of $100.00 per hour**. The cost to the Contractor to reimburse the City for overtime inspection is established at direct-labor and overtime costs for each person or inspector required. Incidental overtime costs for engineering, testing and other related services will also be charged to the Contractor at the actual rate accrued.

8.11 Patent Fee and Royalties: The Contractor shall pay all license fees and royalties and assume all costs incident to the use in the performance of the Work or the incorporation in the Work, or any invention, design, process, product or device which is the subject of patent rights or copyrights held by others. The Contractor hereby expressly binds himself or itself to indemnify and hold harmless the City from all such claims and fees and from any and all suits and action of every name and description that may be brought against City on account of any such claims, fees, royalties, or costs for any such invention or patent, and from any and all suits or actions that may be brought against said City for the infringement of any and all patents or patent rights claimed by any person, firm corporation or other entity.

8.12 Permits: The Contractor shall obtain and pay for all permits and licenses. There shall be no allowance for Contractor markup, overhead or profit for permits and licenses.

The Contractor shall pay all government charges which are applicable at the time of opening of proposals. It shall be the responsibility of the Contractor to secure and pay for all necessary licenses and permits of a temporary nature necessary for the prosecution of Work.

8.13 Law and Regulations: The Contractor shall give all notices and comply with all laws, ordinances, rules and regulations applicable to the Work. If the Contractor observes that the specifications or plans are at variance therewith, the Contractor shall give the Project Manager prompt written notice thereof, and any necessary changes shall be adjusted by any appropriate modifications. If the Contractor performs any work knowing or having reason to know that it is contrary to such laws, ordinances, rules and regulations, and without such notice to the Project Manager, the Contractor shall bear all costs arising therefrom; however, it shall not be the Contractor's primary responsibility to make certain that the specifications and plans are in accordance with such laws, ordinances, rules and regulations.

8.14 Taxes: The Contractor shall pay all sales, consumer, use and other similar taxes required to be paid by him in accordance with the laws of the City of Fort Lauderdale, County of Broward, State of Florida.

8.15 Contractor Use of Premises: The Contractor shall confine construction equipment, the storage of materials and equipment and the operations of workmen to areas permitted by law, ordinances, permits and/or the requirements of the Contract Documents, and shall not unreasonably encumber the premises with construction equipment or other materials or equipment.

The Contractor shall not enter upon private property for any purpose without first securing the permission of the property owner in writing and furnishing the Project Manager with a copy of said permission. This requirement will be strictly enforced, particularly with regard to such vacant properties as may be utilized for storage or staging by the Contractor.

The Contractor shall conduct his work in such a manner as to avoid damage to adjacent private or public property. Any damage to existing structures of work of any kind, including permanent reference markers or property corner markers, or the interruption of a utility service, shall be repaired or restored promptly at no expense to the City or property owner.

The Contractor will preserve and protect all existing vegetation such as trees, shrubs and grass on or adjacent to the site which do not reasonably interfere with the construction, as determined by the Project Manager. The Contractor will be responsible for repairing or replacing any trees, shrubs, lawns and landscaping that may be damaged due to careless operation of equipment, stockpiling of materials, tracking of grass by equipment or other construction activity. The Contractor will be liable for, or will be required to replace or restore at no expense to the City all vegetation not protected or preserved as required herein that may be destroyed or damaged.

During the progress of the work, the Contractor shall keep the premises free from accumulations of waste materials, rubbish and debris resulting from the Work. At the completion of the Work, the Contractor shall remove all waste materials, rubbish and

debris from and about the premises as well as all tools, appliances, construction equipment and machinery, and surplus materials and shall leave the site clean and ready for occupancy by the City. The Contractor shall restore to their original condition those portions of the site not designated for alteration by the Contract Documents at no cost to the City.

8.16 Project Coordination: The Contractor shall provide for the complete coordination of the construction effort. This shall include, but not necessarily be limited to, coordination of the following:

8.16.1 Flow of material and equipment from suppliers.
8.16.2 The interrelated work with affected utility companies.
8.16.3 The interrelated work with the City where tie-ins to existing facilities are required.
8.16.4 The effort of independent testing agencies.
8.16.5 Notice to affected property owners as may be directed by the Project Manager.

8.17 Project Record Documents and Final As-Builts (Record Drawings): Contractor shall be responsible for maintaining up-to-date redline as-built drawings, on site, at all times during construction. All as-built information shall be surveyed and verified by a professional land surveyor registered in the State of Florida. Contractor shall provide the City with a minimum of three (3) sets of signed and sealed record drawings (Final As-Builts) and a CD of the electronic drawings files created in AutoCad 2014 or later. All costs associated with survey work required for construction layout and as-built preparation shall be the responsibility of the Contractor.

8.18 Safety and Protection:

8.18.1 The Contractor shall be responsible for initiating, maintaining and supervising all safety precautions and programs in connection with the Work. The Contractor shall take all necessary precautions for the safety of, and shall provide the necessary protection to prevent damage, injury or loss to:

8.18.1.1 All employees working on the project and other persons who may be affected thereby.
8.18.1.2 All the Work and all materials or equipment to be incorporated therein, whether in storage on or off the site.
8.18.1.3 Other property at the site or adjacent thereto, including trees, shrubs, lawns, walks, pavements, roadways, structures and utilities not designated for removal, relocation or replacement in the course of construction.

8.18.2 The Contractor shall comply with all applicable laws, ordinances, rules, regulations and orders of any public body having jurisdiction for the safety of persons or property or to protect them from damage, injury or loss; and shall erect and maintain all necessary safeguards for such safety and protection. The Contractor shall notify owners of adjacent property and utilities when execution of the Work may affect them at least seventy-two (72) hours in advance (unless otherwise required). All damage, injury or loss to any property caused, directly or indirectly, in whole or in part by the Contractor, any subcontractor or anyone directly or indirectly employed by any of them or

anyone for whose acts any of them may be liable, shall be remedied by the Contractor. The Contractor's duties and responsibilities for safety and protection of the Work shall continue until such time as all the Work is completed and accepted by the City.

8.19 Emergencies: In emergencies affecting the safety or protection of persons or the Work or property at the site or adjacent thereto, the Contractor, without special instruction or authorization from the City is obligated to act to prevent threatened damage, injury or loss. The Contractor shall give the Project Manager prompt written notice of any significant changes in the Work or deviations from the Contract Documents caused thereby.

8.20 Risk of Loss: The risk of loss, injury or destruction shall be on the Contractor until acceptance of the Work by the City. Title to the Work shall pass to the City upon acceptance of the Work by the City.

8.21 Environmental: The Contractor has fully inspected the Premises and agrees, except as to the presence of any asbestos, to accept the Premises in an "as is" physical condition, without representation or warranty by the City of any kind, including, without limitation, any and all existing environmental claims or obligations that may arise from the presence of any "contamination" on, in or about the Premises. Further, Contractor and all entitles claiming by, through or under the Contractor, releases and discharges the City, from any claim, demand, or cause of action arising out of or relating to the Contractor's use, handling, storage, release, discharge, treatment, removal, transport, decontamination, cleanup, disposal and/or presence of any hazardous substances including asbestos on, under, from or about the Premises. The Contractor shall have no liability for any pre-existing claims or "contamination" on the Premises.

The Contractor shall not use, handle, store, discharge, treat, remove, transport, or dispose of Hazardous Substances including asbestos at, in, upon, under, to or from the Premises until receipt of instructions from the City. At such time, a City approved Change Order, which shall not include any profit, shall authorize the Contractor to perform such services.

The Contractor shall immediately deliver to the Project Manager complete copies of all notices, demands, or other communications received by the Contractor from any governmental or quasi-governmental authority or any insurance company or board of fire underwriters or like or similar entities regarding in any way alleged violations or potential violations of any Environmental Law or otherwise asserting the existence or potential existence of any condition or activity on the Premises which is or could be dangerous to life, limb, property, or the environment.

For other and additional consideration, the Contractor hereby agrees, at its sole cost and expense, to indemnify and protect, defend, and hold harmless the City and its respective employees, agents, officials, officers, representatives, contractors and subcontractors, successors, and assigns (hereafter the "City") from and against any and all claims, demands, losses, damages, costs, expenses, including but not limited to mitigation, restoration, and natural restoration expenses, liabilities, assessments, fines, penalties charges, administrative and judicial proceedings and orders, judgments, causes of action, in law or in equity, remedial action requirements and/or enforcement actions of any kind (including, without limitation, attorneys' fees and

costs) directly or indirectly arising out of or attributable to, in whole or in part, the Contractor's use, handling, storage, release, threatened release, discharge, treatment, removal, transport, decontamination, cleanup, disposal and/or presence of a Hazardous Substance (excluding asbestos) on, under, from, to or about the Premises or any other activity carried on or undertaken on or off the Premises by the Contractor or its employees, agents or subcontractors, in connection with the use, handling, storage, release, threatened release, discharge, treatment, mitigation, natural resource restoration, removal, transport, decontamination, cleanup, disposal and/or presence or any Hazardous Substance including asbestos located, transported, or present on, undue, from, to, or about the Premises. This indemnity is intended to be operable under 42 U.S.C. sections 9607, as amended, and any successor section.

The scope of the indemnity obligations includes, but is not limited to: (a) all consequential damages; (b) the cost of any required or necessary repair, cleanup, or detoxification of the applicable real estate and the preparation and implementation of any closure, remedial or other required plan, including without limitation; (i) the costs of removal or remedial action incurred by the United States government or the State of Florida or response costs incurred by any other person, or damages from injury to destruction of, or loss of, natural resources, including the cost of assessing such injury, destruction, or loss, incurred pursuant to the Comprehensive Environmental Response, Compensation and Liability Act, as amended; (ii) the clean-up costs, fines, damages, or penalties incurred pursuant to any applicable provisions of Florida law; and (iii) the cost and expenses of abatement, correction or cleanup, fines, damages, response costs, or penalties which arise from the provisions of any other statute, law, regulation, code ordinance, or legal requirement state or federal; and (c) liability for personal injury or property damage arising under any statutory or common law tort theory, including damages assessed for the maintenance of a public private nuisance, response costs, or for the carrying on of an abnormally dangerous activity.

8.22 No Extended Damages: For other and additional good and valuable consideration the receipt and sufficiency of which is hereby acknowledged, the Contractor covenants and agrees that in the event of any delay of construction or for any other reason or allegation or claim, and notwithstanding the reason of the delay, reason, claim or allegation or who caused them or the construction delay or whether they were caused by the City, that there will be no entitlement to Contractor to or for any direct or indirect financial damages or losses for extended corporate overhead impact, extended project overhead impacts, project support services, mobilization or demobilization or by whatever other label or legal concept or theory and types of names or labels or basis such claims may have, or any business damages or losses of whatever type or nature, and Contractor hereby waives any right to make any such claim or claims. This provision will have application and effect when construction delays are anticipated and agreed upon by both the City and the Contractor.

8.23 No Liens: If any Subcontractor, supplier, laborer, or materialmen of Contractor or any other person directly or indirectly acting for or through Contractor files or attempts to file a mechanic's or construction lien against the real property on which the work is performed or any part or against any personal property or improvements or claim against any monies due or to become due from the City to Contractor or from Contractor to a Subcontractor, for or on account of any work, labor, services, material, equipment, or other items furnished in connection with the Work or any Change Order, Contractor agrees to satisfy, remove, or discharge such lien or claim at its own

expense by bond, payment, or otherwise within twenty (20) days of the filing or from receipt of written notice from the City.

Additionally, until such time as such lien or claim is satisfied, removed or discharged by Contractor, all monies due to Contractor, or that become due to Contractor before the lien or claim is satisfied, removed or otherwise discharged, shall be held by City as security for the satisfaction, removal and discharge of such lien and any expense that may be incurred while obtaining such. If Contractor shall fail to do so, City shall have the right, in addition to all other rights and remedies provided by this Agreement or by law, to satisfy, remove, or discharge such lien or claim by whatever means City chooses at the entire and sole cost and expense of Contractor which costs and expenses shall, without limitation, include attorney's fees, litigation costs, fees and expenses and all court costs and assessments.

8.24 Weather Emergencies: Upon issuance of a Hurricane Watch by the National Weather Service, the Contractor shall submit to the City a plan to secure the work area in the event a Hurricane Warning is issued. The plan shall detail how the Contractor will secure the Premises, equipment and materials in a manner as to prevent damage to the Work and prevent materials and equipment from becoming a hazard to persons and property on and around the Premises. The plan shall include a time schedule required to accomplish the hurricane preparations and a list of emergency contacts that will be available and in the City before, during and immediately after the storm.

Upon issuance of a Hurricane Warning by the National Weather Service, if the Contractor has not already done so, the Contractor shall implement its hurricane preparedness plan. Cost of development and implementation of the hurricane preparedness plan shall be considered as incidental to construction. Cost of any clean up and rework required after the storm will be considered normal construction risk within Florida and shall not entitle the Contractor to any additional compensation. Contractor shall be entitled to request an extension in time for completion of the Work, in accordance with the provisions of Article 15 of this Agreement, equal to the time he is shut down for implementation of the preparedness plan, the duration of the storm and a reasonable period to restore the Premises.

8.25 Force Majeure: No Party shall hold the other responsible for damages or for delays in performance caused by force majeure, acts of God, or other acts or circumstances beyond the control of the other party or that could not have been reasonably foreseen and prevented. For this purposes, such acts or circumstances shall include, but not be limited to weather conditions affecting performance, floods, epidemics, war, riots, strikes, lockouts, or other industrial disturbances, or protest demonstrations. Should such acts or circumstances occur, the parties shall use their best efforts to overcome the difficulties arising therefrom and to resume the Work as soon as reasonably possible with the normal pursuit of the Work.

Inclement weather, continuous rain for less than three (3) days or the acts or omissions of subcontractors, third-party contractors, materialmen, suppliers, or their subcontractors, shall not be considered acts of force majeure.

No Party shall be liable for its failure to carry out its obligations under the Agreement during a period when such Party is rendered unable by force majeure to carry out its obligation, but the obligation of the Party or Parties relying on such force majeure shall

be suspended only during the continuance of the inability and for no longer period than the unexpected or uncontrollable event.

The Contractor further agrees and stipulates, that its right to excuse its failure to perform by reason of force majeure shall be conditioned upon giving written notice of its assertion that a Force Majeure delay has commenced within 96 hours after such an occurrence. The CONTRACTOR shall use its reasonable efforts to minimize such delays. The CONTRACTOR shall promptly provide an estimate of the anticipated additional time required to complete the Project.

8.26 Participation by Disadvantaged Business Enterprises in Department of Transportation Financial Assisted Contracts: The recipient shall not discriminate on the basis of race, color, national origin, or sex in the award and performance of any DOT-assisted contract or in the administration of its DBE program or the requirements of 49 CFR part 26. The recipient shall take all necessary and reasonable steps under 49 CFR part 26 to ensure nondiscrimination in the award and administration of DOT-assisted contracts. The recipient's DBE program, as required by 49 CFR part 26 and as approved by DOT, is incorporated by reference in this agreement. Implementation of this program is a legal obligation and failure to carry out its terms shall be treated as a violation of this agreement. Upon notification to the recipient of its failure to carry out its approved program, the Department may impose sanctions as provided for under part 26 and may, in appropriate cases, refer the matter for enforcement under 18 U.S.C. 1001 and/or the Program Fraud Civil Remedies Act of 1986 (31 U.S.C. 3801 *et seq.*).

Additionally, the contractor assures that they, the sub recipient or the subcontractor shall not discriminate on the basis of race, color, national origin, or sex in the performance of this contract. The contractor shall carry out applicable requirements of 49 CFR part 26 in the award and administration of DOT-assisted contracts. Failure by the contractor to carry out these requirements is a material breach of this contract, which may result in the termination of this contract or such other remedy as the recipient deems appropriate. (This additional language must be included in each subcontract the prime contractor signs with a subcontractor.)

ARTICLE 9 – CITY'S RESPONSIBILITIES

9.1 The City shall furnish the data required of the City under the Contract Documents promptly and shall make payments to the Contractor promptly after they are due as provided in Article 7.

9.2 The City's duties in respect of providing lands and easements and providing engineering surveys to establish reference points are set forth in the Contract Documents.

9.3 Technical Clarifications and Interpretations:

9.3.1 The City shall issue, with reasonable promptness, such written clarifications or interpretations of the Contract Documents as it may determine necessary, which shall be consistent with or reasonably inferable from the overall intent of the Contract Documents. Should the Contractor fail to request interpretation of

questionable items in the Contract Documents, the City shall not entertain any excuse for failure to execute the Work in a satisfactory manner.

9.3.2 The City shall interpret and decide matters concerning performance under the requirements of the Contract Documents, and shall make decisions on all claims, disputes or other matters in question. Written notice of each claim, dispute or other matter will be delivered by claimant to the other Party but in no event later than five (5) days after the occurrence of event, and written supporting date will be submitted to the other Party within five (5) days after such occurrence. All written decisions of the City on any claim or dispute will be final and binding.

9.4 The Contractor shall perform all Work to the reasonable satisfaction of the City in accordance with the Contract Documents. In cases of disagreement or ambiguity, the City shall decide all questions, difficulties, and disputes of whatever nature, which may arise under or by reason of this Agreement or the quality, amount and value of the Work, and the City's decisions on all claims, questions and determination are final.

ARTICLE 10 – BONDS AND INSURANCE

10.1 Public Construction and Other Bonds: The Contractor shall furnish Public Construction or Performance and Payment Bonds ("Bond"), each in an amount at least equal to the Contract Price as security for the faithful performance and payment of all the Contractor's obligations under the Contract Documents. These Bonds shall remain in effect until at least one (1) year after the date of final payment, except as otherwise provided by law. All Bonds shall be furnished and provided by the surety and shall be in substantially the same form as prescribed by the Contract Documents and be executed by such sureties as (i) are licensed to conduct business in the State of Florida, and (ii) are named in the current list of Companies Holding Certificates of Authority as Acceptable Sureties on Federal Bonds and as Acceptable Reinsuring Companies as published in Circular 570 (amended) by the Audit Staff Bureau of Accounts, U.S. Treasury Department and (iii) otherwise meet the requirements set forth herein that apply to sureties. All Bonds signed by an agent must be accompanied by a certified copy of the authority to act.

10.1.1 Performance Bond: The Contractor shall execute and record in the public records of Broward County, Florida, a payment and performance bond in an amount at least equal to the Contract Price with a surety insurer authorized to do business in the State of Florida as surety, ("Bond"), in accordance with Section 255.05, Florida Statutes (2014), as may be amended or revised, as security for the faithful performance and payment of all of the Contractor's obligations under the Contract Documents.

A Corporate Surety Bond legally issued, meeting the approval of, and running to the City in an amount not less than the Contract Price of such improvements, conditioned that the Contractor shall maintain and make all repairs to the improvements constructed by the Contractor at their own expense and free of charge to the City, for the period of one (1) year after the date of acceptance of the Work within such period by reason of any imperfection of the material used or by reason of any defective workmanship, or any improper, imperfect or

defective preparation of the base upon which any such improvement shall be laid.

10.2 Disqualification of Surety: If the Surety on any Bond furnished by the Contractor is declared bankrupt or becomes insolvent or its right to do business is terminated in the State of Florida or it ceases to meet the requirements of clauses (i) and (ii) of Paragraph 10.1, the Contractor shall within five (5) days thereafter substitute another Bond and Surety, both of which shall be acceptable to the City.

10.3 Insurance

10.3.1 As a condition precedent to the effectiveness of this Agreement, during the term of this Agreement and during any renewal or extension term of this Agreement, the Contractor, at the Contractor's sole expense, shall provide insurance of such types and with such terms and limits as noted below. Providing proof of and maintaining adequate insurance coverage are material obligations of the Contractor. The Contractor shall provide the City a certificate of insurance evidencing such coverage. The Contractor's insurance coverage shall be primary insurance for all applicable policies. The limits of coverage under each policy maintained by the Contractor shall not be interpreted as limiting the Contractor's liability and obligations under this Agreement. All insurance policies shall be from insurers authorized to write insurance policies in the State of Florida and that possess an A.M. Best rating of A-, VII or better. All insurance policies are subject to approval by the City's Risk Manager.

The coverages, limits, and endorsements required herein protect the interests of the City, and these coverages, limits, and endorsements may not be relied upon by the Contractor for assessing the extent or determining appropriate types and limits of coverage to protect the Contractor against any loss exposure, whether as a result of this Agreement or otherwise. The requirements contained herein, as well as the City's review or acknowledgement, are not intended to and shall not in any manner limit or qualify the liabilities and obligations assumed by the Contractor under this Agreement.

The following insurance policies and coverages are required:

10.3.2 Commercial General Liability

Coverage must be afforded under a Commercial General Liability policy with limits not less than:

- $1,000,000 each occurrence and $2,000,000 aggregate for Bodily Injury, Property Damage, and Personal and Advertising Injury
- $1,000,000 each occurrence and $2,000,000 aggregate for Products and Completed Operations

Policy must include coverage for Contractual Liability and Independent Contractors.

The City and the City's officers, employees, and volunteers are to be covered as additional insureds with a CG 20 26 04 13 Additional Insured – Designated Person or Organization Endorsement or similar endorsement providing equal or broader Additional Insured Coverage with respect to liability arising out of activities performed by or on behalf of the Contractor.

The coverage shall contain no special limitation on the scope of protection afforded to the City or the City's officers, employees, and volunteers.

10.3.3 Business Automobile Liability
Coverage must be afforded for all Owned, Hired, Scheduled, and Non-Owned vehicles for Bodily Injury and Property Damage in an amount not less than $1,000,000 combined single limit each accident.

If the Contractor does not own vehicles, the Contractor shall maintain coverage for Hired and Non-Owned Auto Liability, which may be satisfied by way of endorsement to the Commercial General Liability policy or separate Business Auto Liability policy.

10.3.4 Workers' Compensation and Employer's Liability
Coverage must be afforded per Chapter 440, Florida Statutes. Any person or entity performing work for or on behalf of the City must provide Workers' Compensation insurance. Exceptions and exemptions will be allowed by the City's Risk Manager, if they are in accordance with Florida Statute.

The Contractor waives, and the Contractor shall ensure that the Contractor's insurance carrier waives, all subrogation rights against the City and the City's officers, employees, and volunteers for all losses or damages. The City requires the policy to be endorsed with WC 00 03 13 Waiver of our Right to Recover from Others or equivalent.

The Contractor must be in compliance with all applicable State and federal workers' compensation laws, including the U.S. Longshore Harbor Workers' Act and the Jones Act, if applicable.

10.3.5 Umbrella/Excess Liability: The Contractor shall provide umbrella/excess coverage with limits of no less than $2,000,000 excess of Commercial General Liability, Automobile Liability and Employer's Liability.

10.3.6 Crane and Rigging Liability
Coverage must be afforded for any crane operations under the Commercial General or Business Automobile Liability policy as necessary, in line with the limits of the associated policy.

10.3.7 Contractor's Pollution Liability Coverage
For sudden and gradual occurrences and in an amount not less than $1,000,000 per claim arising out of this Agreement, including but not limited to, all hazardous materials identified under the Agreement.

Insurance Certificate Requirements

a. The Contractor shall provide the City with valid Certificates of Insurance (binders are unacceptable) no later than thirty (30) days prior to the start of work contemplated in this Agreement.
b. The Contractor shall provide to the City a Certificate of Insurance having a thirty (30) day notice of cancellation; ten (10) days' notice if cancellation is for nonpayment of premium.

c. In the event that the insurer is unable to accommodate the cancellation notice requirement, it shall be the responsibility of the Contractor to provide the proper notice. Such notification will be in writing by registered mail, return receipt requested, and addressed to the certificate holder.
d. In the event the Agreement term goes beyond the expiration date of the insurance policy, the Contractor shall provide the City with an updated Certificate of Insurance no later than ten (10) days prior to the expiration of the insurance currently in effect. The City reserves the right to suspend the Agreement until this requirement is met.
e. The Certificate of Insurance shall indicate whether coverage is provided under a claims-made or occurrence form. If any coverage is provided on a claims-made form, the Certificate of Insurance must show a retroactive date, which shall be the effective date of the initial contract or prior.
f. The City shall be named as an Additional Insured on all liability policies, with the exception of Workers' Compensation.
g. The City shall be granted a Waiver of Subrogation on the Contractor's Workers' Compensation insurance policy.
h. The title of the Agreement, Bid/Contract number, event dates, or other identifying reference must be listed on the Certificate of Insurance.

<u>The Certificate Holder should read as follows:</u>
City of Fort Lauderdale
100 N. Andrews Avenue
Fort Lauderdale, FL 33301

The Contractor has the sole responsibility for the payment of all insurance premiums and shall be fully and solely responsible for any costs or expenses as a result of a coverage deductible, co-insurance penalty, or self-insured retention; including any loss not covered because of the operation of such deductible, co-insurance penalty, self-insured retention, or coverage exclusion or limitation. Any costs for adding the City as an Additional Insured shall be at the Contractor's expense.

If the Contractor's primary insurance policy/policies do not meet the minimum requirements, as set forth in this Agreement, the Contractor may provide evidence of an Umbrella/Excess insurance policy to comply with this requirement.

The Contractor's insurance coverage shall be primary insurance as applied to the City and the City's officers, employees, and volunteers. Any insurance or self-insurance maintained by the City covering the City, the City's officers, employees, or volunteers shall be non-contributory.

Any exclusion or provision in the insurance maintained by the Contractor that excludes coverage for work contemplated in this Agreement shall be unacceptable and shall be considered breach of contract.

All required insurance policies must be maintained until the contract work has been accepted by the City, or until this Agreement is terminated, whichever is later. Any lapse in coverage shall be considered breach of contract. In addition, Contractor must provide to the City confirmation of coverage renewal via an updated certificate should any policies expire prior to the expiration of this Agreement. The City reserves the right to review, at any time, coverage forms and limits of Contractor's insurance policies.

The Contractor shall provide notice of any and all claims, accidents, and any other occurrences associated with this Agreement shall be provided to the Contractor's insurance company or companies and the City's Risk Management office as soon as practical.

It is the Contractor's responsibility to ensure that any and all of the Contractor's independent contractors and subcontractors comply with these insurance requirements. All coverages for independent contractors and subcontractors shall be subject to all of the applicable requirements stated herein. Any and all deficiencies are the responsibility of the Contractor.

NOTE: CITY PROJECT NUMBER, NAME AND BID NUMBER MUST APPEAR ON EACH CERTIFICATE, AND THE CITY OF FORT LAUDERDALE MUST BE NAMED ON THE CERTIFICATE AS AN "ADDITIONAL INSURED" ON GENERAL LIABILITY AND PROFESSIONAL LIABILITY POLICIES.

A Sample Insurance Certificate shall be included with the proposal to demonstrate the firm's ability to comply with insurance requirements. Provide a previous certificate or other evidence listing the insurance companies' names for all required coverage, and the dollar amounts of the coverage.

ARTICLE 11- WARRANTY AND GUARANTEE, TESTS AND INSPECTIONS, CORRECTION, REMOVAL OR ACCEPTANCE OF DEFECTIVE WORK

11.1 Warranty: The Contractor warrants and guarantees to the City that all Work will be in accordance with the Contract Documents and will not be defective. Prompt notice of all defects shall be given to the Contractor. All defective work, whether or not in place, may be rejected, corrected or accepted as provided in this Article.

11.1.1 Warranty of Title: The Contractor warrants to the City that it possesses good, clear and marketable title to all equipment and materials provided and that there are no pending liens, claims or encumbrances against the equipment and materials.

11.1.2 Warranty of Specifications: The Contractor warrants that all equipment, materials and workmanship furnished, whether furnished by the Contractor, its subcontractors or suppliers, will comply with the specifications, drawings and other descriptions supplied or adopted and that all services will be performed in a workmanlike manner.

11.1.3 Warranty of Merchantability: The Contractor warrants that any and all equipment to be supplied pursuant to this Agreement is merchantable, free from defects, whether patent or latent in material or workmanship, and fit for the ordinary purposes for which it is intended.

11.2 Tests and Inspections: Contractor shall retain the services of an independent, certified, testing lab to perform all testing as required by the specifications, Contract drawings, and any applicable permitting agency. Contractor shall provide evidence of certification to the City before the work and testing is done. Testing results shall be submitted to the Engineer for review and approval at the time the results are provided to the Contractor. The Contractor shall give the Project Manager and City Inspector a

minimum of twenty-four (24) hours' advanced notice of readiness of the Work for all required inspections, tests, or approvals and shall notify all applicable permitting agencies in a timely manner based on requirements set forth in the permit documents.

11.2.1 Neither observations by the Project Manager nor inspections, tests or approvals by others shall relieve the Contractor from its obligations to perform the Work in accordance with the Contract Documents.

11.3 Uncovering Work: If any work that is to be inspected, tested or approved is covered without approval or consent of the Project Manager, it must, if requested by the Project Manager, be uncovered for observation and/or testing. Such uncovering and replacement shall be at the Contractor's sole expense unless the Contractor has given the Project Manager timely notice of the Contractor's intention to cover such Work and the Project Manager has not acted with reasonable promptness in response to such notice.

11.3.1 If the Project Manager considers it necessary or advisable that Work covered in accordance with Paragraph 11.2.1, 11.2.2 and 11.2.3 be observed by the City or inspected or tested by others, the Contractor at the City's request, shall uncover, expose or otherwise make available for observation, inspection or testing as the Project Manager may require, that portion of the Work in question, furnishing all necessary labor, material and equipment. If it is found that such Work is defective, the Contractor shall bear all the expenses of such uncovering, exposure, observation, inspection and testing and of satisfactory reconstruction, including compensation for additional professional services, and an appropriate deductive Change Order shall be issued. If, however, such work is not found to be defective, the Contractor shall be allowed an increase in the Contract Price or an extension of the Contract Time, or both, directly attributable to such uncovering, exposure, observation, inspection testing and reconstruction if he makes a claim therefore as provided in Articles 14 and 15.

11.4 City May Stop the Work: If the Work is defective, or the Contractor fails to supply sufficient skilled supervisory personnel or workmen or suitable materials or equipment or the work area is deemed unsafe, the City may order the Contractor to stop the Work, or any portion thereof, until the cause for such order has been eliminated; however, this right of the City to stop the Work shall not give rise to any duty on the part of the City to exercise this right for the benefit of the Contractor or any other party. The City will not award any increase in Contract Price or Contract Time if the Work is stopped due to the circumstances described herein.

11.5 Correction or Removal of Defective Work Before Final Payment: If required by the Project Manager, the Contractor shall promptly, without cost to the City and as Specified by the Project Manager, either correct any defective Work, whether or not fabricated, installed or completed, or if the Work has been rejected by the City remove it from the site and replace it with non-defective Work.

11.6 One Year Correction Period After Final Payment: If within one (1) year after the date of final acceptance, or such longer period of time as may be prescribed by law or by the terms of any applicable special guarantee required by the Contract Documents, any work is found to be defective, the Contractor shall promptly, without cost to the City and in accordance with the City's written instructions, either correct such defective

Work, or, if it has been rejected by the City, remove it from the site and replace it with non-defective Work.

If the Contractor does not promptly comply with the terms of such instructions or in an emergency where delay would cause serious risk of loss or damage, the City may have the defective Work corrected or the rejected Work removed and replaced, and all direct and indirect costs for such removal and replacement, including compensation for additional professional services, shall be paid by the Contractor.

11.7 Acceptance of Defective Work, Deductions: If, instead of requiring correction or removal and replacement of defective Work, the City, at the City's sole option, prefers to accept it, the City may do so. In such a case, if acceptance occurs prior to the Project Manager's recommendation of final payments, a Change Order shall be issued incorporating the necessary revisions in the Contract's Documents, including appropriate reduction in the Contract Price; or if the acceptance occurs after such recommendation, an appropriate amount shall be paid by the Contractor to the City.

11.8 City May Correct Defective Work: If the Contractor fails within a reasonable time after written notice of the Project Manager to proceed to correct defective Work or to remove and replace rejected Work as required by the Project Manager in accordance with Paragraph 11.5, or if the Contractor fails to perform the Work in accordance with the Contract Documents, the City may, after seven (7) days written notice to the Contractor, correct and remedy any such deficiency. In exercising its rights under this paragraph, the City shall proceed expeditiously. To the extent necessary to complete corrective and remedial action, the City may exclude the Contractor from all or part of the site, take possession of all or part of the Work, suspend the Contractor's services related thereto and take possession of the Contractor's tools, construction equipment and materials stored at the site or elsewhere. The Contractor shall allow the City's representative agents and employees such access to the site as may be necessary to enable the City to exercise its rights under this paragraph. All direct and indirect costs of the City in exercising such rights shall be charged against the Contractor in an amount verified by the Project Manager, and a Change Order shall be issued incorporating the necessary revisions in the Contract Documents and a reduction in the Contract Price. Such direct and indirect costs shall include, in particular but without limitation, compensation for additional professional services required and costs of repair and replacement of work of others destroyed or damaged by correction, removal or replacement of the Contractor's defective Work. The Contractor shall not be allowed an extension of the Contract Time because of any delay in performance of the Work attributable to the exercise by the City of the City's right hereunder.

ARTICLE 12 – INDEMNIFICATION

12.1 Disclaimer of Liability: The City shall not at any time, be liable for injury or damage occurring to any person or property from any cause, whatsoever, arising out of Contractor's construction and fulfillment of this agreement.

12.2 Indemnification: For other, additional good valuable consideration, the receipt and sufficiency of which is hereby acknowledged:

12.2.1 Contractor shall, at its sole cost and expense, indemnify and hold harmless the City, its representatives, employees and elected and appointed officials from or

on account of all claims, damages, losses, liabilities and expenses, direct, indirect or consequential including but not limited to fees and charges of engineers, architects, attorneys, consultants and other professionals and court costs arising out of or in consequence of the performance of this Agreement at all trial and appellate levels. Indemnification shall specifically include but not be limited to claims, damages, losses, liabilities and expenses arising out of or from (a) the negligent or defective design of the project and Work of this Agreement; (b) any act, omission or default of the Contractor, its Subcontractors, agents, servants or employees; (c) any and all bodily injuries, sickness, disease or death; (d) injury to or destruction of tangible property, including any resulting loss of use; (e) other such damages, liabilities, or losses received or sustained by any person or persons during or on account of any operations connected with the construction of this Project including the warranty period; (f) the use of any improper materials; (g) any construction defect including both patent and latent defects; (h) failure to timely complete the work; (i) the violation of any federal, state, county or city laws, ordinances or regulations by Contractor, its subcontractors, agents, servants, independent contractors or employees; (j) the breach or alleged breach by Contractor of any term of the Agreement, including the breach or alleged breach of any warranty or guarantee.

12.2.2 Contractor agrees to indemnify, defend, and hold harmless the City, its officers, agents and employees, from all damages, liabilities, losses, claims, fines and fees, and from any and all suits and actions of every name and description that may be brought against City, its officers, agents and employees, on account of any claims, fees, royalties, or costs for any invention or patent and/or for the infringement of any and all copyrights or patent rights claimed by any person, firm, or corporation.

12.2.3 Contractor shall pay all claims, losses, liens, settlements or judgments of any nature in connection with the foregoing indemnifications including, but not limited to, reasonable attorney's fees and costs for trails and appeals.

12.2.4 If any Subcontractor, supplier, laborer, or materialmen of Contractor or any other person directly or indirectly acting for or through Contractor files or attempts to file a mechanic's or construction lien against the real property on which the work is performed or any part or against any personal property or improvements thereon or make a claim against any monies due or to become due from the City to Contractor or from Contractor to a Subcontractor, for or on account of any work, labor, services, material, equipment, or other items furnished in connection with the Work or any change order, Contractor agrees to satisfy, remove, or discharge such lien or claim at its own expense by bond, payment, or otherwise within five (5) days of the filing or from receipt of written notice from the City.

Additionally, until such time as such lien or claim is satisfied, removed or discharged by Contractor, all monies due to Contractor, or that become due to Contractor before the lien or claim is satisfied, removed or otherwise discharged, shall be held by City as security for the satisfaction, removal and discharge of such lien and any expense that may be incurred while obtaining the discharge. If Contractor shall fail to do so, City shall have the right, in

addition to all other rights and remedies provided by this Agreement or by law, to satisfy, remove, or discharge such lien or claim by whatever means City chooses at the entire and sole cost and expense of Contractor which costs and expenses shall, without limitation, include attorney's fees, litigation costs, fees and expenses and all court costs and assessments, and which shall be deducted from any amount owing to Contractor. In the event the amount due Contractor is less than the amount required to satisfy Contractor's obligation under this, or any other article, paragraph or section of this Agreement, the Contractor shall be liable for the deficiency due the City.

12.2.5 The Contractor and the City agree that Section 725.06(2), Florida Statutes controls the extent and limits of the indemnification and hold harmless provisions of this Agreement, if any, and that the parties waive any defects in the wording of this Article that runs afoul of said statutory section.

ARTICLE 13 – CHANGES IN THE WORK

13.1 Without invalidating this Agreement, the City may, at any time or from time to time order additions, deletions or revisions in the Work through the issuance of Change Orders. Upon receipt of a Change Order, the Contractor shall proceed with the Work involved. All Work shall be executed under the applicable conditions of the Contract Documents. If any Change Order causes an increase or decrease in the Contract Price or an extension or shortening of the Contract Time, an equitable adjustment will be made as provided in Article 14 or Article 15 on the basis of a claim made by either Party.

13.2 The Project Manager may authorize minor changes in the work not involving an adjustment in the Contract Price or the Contract Time, which are consistent with the overall intent of the Contract Documents. Such changes must be in writing and signed by the City and the Contractor.

13.3 If notice of any change affecting the general scope of the Work or change in the Contract Price is required by the provisions of any Bond to be given to the Surety, it will be the Contractor's responsibility to so notify the Surety, and the amount of each applicable Bond shall be adjusted accordingly. The Contractor shall furnish proof of such adjustment to the City.

ARTICLE 14 – CHANGE OF CONTRACT PRICE

Change of Contract Price, approved by City, shall be computed as follows:

14.1 <u>Cost of the Work</u>: The term "Cost of the Work" means the sum of all direct costs necessarily incurred and paid by Contractor in the proper performance of the Work. Except as otherwise may be agreed to in writing by the City, these costs shall be in amounts no higher than those prevailing in the City and shall include only the following items and shall not include any of the costs itemized in Paragraph 14.3:

14.1.1 Payroll costs for employees in the direct employ of the Contractor in the performance of the Work under schedules of job classifications agreed upon by the City and the Contractor. Payroll costs for employees not employed full time on the Work shall be apportioned on the basis of their time spent on the Work.

Payroll costs shall include, but not be limited to, salaries and wages plus and cost of fringe benefits which shall include social security contributions, unemployment, excise and payroll taxes, worker's compensation, health and retirement benefits, bonuses, sick leave, vacation and applicable holiday pay.

14.1.2 Cost of all materials and equipment furnished and incorporated in the Work, including costs of transportation and storage, and required suppliers and field services. All cash discounts, rebates and refunds and all returns from sale of surplus materials and equipment shall accrue to the City, and the Contractor shall make provisions so that they may be obtained.

14.1.3 Supplemental costs including the following:

14.1.3.1 Cost, including transportation and maintenance of all materials, supplies, equipment, machinery, appliances, office and temporary facilities at the site and hand tools not owned by the workers, which are consumed in the performance of the Work.

14.1.3.2 Rentals of all construction equipment and machinery and the parts whether rented from the Contractor or others in accordance with rental agreements approved by the City, and the costs of transporting, loading, unloading, installation, dismantling and removal. The rental of any such equipment, machinery or parts shall cease when the use is no longer necessary for the Work.

14.1.3.3 Sales, consumer, use or similar taxes related to the Work and for which the Contractor is liable, imposed by laws and regulations.

14.1.3.4 Royalty payments and fees for permits and licenses.

14.1.3.5 The cost of utilities, fuel and sanitary facilities at the Work site.

14.1.3.6 Minor expenses such as telegrams, long distance telephone calls, telephone service at the site, expressage and similar petty cash items in connection with the Work.

14.1.3.7 Cost of premiums for additional bonds and insurance required because of changes in the Work.

14.2 The Contract Price may only be increased by a Change Order when Work is modified in accordance with Article 13 and approved by the City in writing. Any claim for an increase in the Contract Price resulting from a Change Order shall be based on written notice delivered to the Project Manager within ten (10) days of the occurrence of the Change Order giving rise to the claim. Notice of the amount of the claim with supporting data shall be included in the Change Order and delivered within twenty (20) days of such occurrence unless Project Manager allows an additional period of time to ascertain accurate cost data. Any change in the Contract Price resulting from any such claim shall be incorporated in the Change Order. **IT IS EXPRESSLY AND SPECIFICALLY AGREED THAT ANY AND ALL CLAIMS FOR CHANGES TO THE CONTRACT PRICE SHALL BE WAIVED IF NOT SUBMITTED IN STRICT ACCORDANCE WITH THE REQUIREMENTS OF THIS SECTION.**

14.3 Not Included in the Cost of the Work: The term "cost of the Work" shall not include any of the following:

14.3.1 Payroll costs and other compensation of the Contractor's officers executives, principals (of partnership and sole proprietorships), general managers, engineers, architects, estimators, attorneys, auditor, accountants, purchasing and contracting agents, expediters, timekeepers, clerks and other personnel employed by the Contractor whether at the site or in the Contractor's principal or branch office for general administration of the work and not specifically included in the agreed upon schedule of job classifications referred to in Paragraph 14.1.1, all of which are to be considered administrative costs covered by the Contractor's fee.

14.3.2 Expenses of the Contractor's principal and branch offices other than the Contractor's office at the site.

14.3.3 Any part of the Contractor's capital expenses, including interest on the Contractor's capital employed for the Work and charges against the Contractor for delinquent payments.

14.3.4 Cost of premiums for all bonds and for all insurance whether or not the Contractor is required by the Contract Documents to purchase and maintain the same.

14.3.5 Costs due to the negligence of the Contractor, any subcontractor, or anyone directly or indirectly employed by any of them or for whose acts any of them may be liable, including but not limited to, the correction of defective Work, disposal of materials or equipment wrongly supplied and making good any damage to property.

14.3.6 Other overhead or general expense costs of any kind and the costs of any item not specifically and expressly included in Paragraph 14.1

14.4 Basis of Compensation: The Contractor's compensation, allowed to the Contractor for overhead and profit, shall be determined as follows:

14.4.1 A mutually acceptable negotiated fee:

14.4.1.1 For costs incurred under Paragraphs 14.1.1 and 14.1.2, the Contractor's fee shall not exceed five percent (5%).

14.4.1.2 No fee shall be payable on the basis of costs itemized under Paragraphs 14.1.3.1, 14.1.3.2, 14.1.3.3, 14.1.3.4, 14.1.3.5, 14.1.3.6, 14.1.3.7, 14.3.1, 14.3.2, 14.3.3, 14.3.4, 14.3.5 and 14.3.6.

14.4.1.3 The amount of credit to be allowed by the Contractor to the City for any such change which results in a net decrease plus a deduction in the Contractor's fee by an amount equal to five percent (5%) for the net decrease.

14.4.1.4 When both additions and credits are involved in any one change the combined overhead and profit shall be figured on the basis of net increase if any, however, not to exceed five percent (5%) of the agreed compensation. Profit will not be paid on any Work not performed.

14.5 Cost Breakdown Required: Whenever the cost of any Work is to be determined pursuant to this Article, the Contractor will submit in form acceptable to the City an itemized cost breakdown together with supporting documentation. Whenever a change in the Work is to be based upon mutual acceptance of a lump sum, whether the amount is an addition, credit, or no-charge-in-cost, the Contractor shall submit an estimate substantiated by a complete itemized breakdown:

14.5.1 The breakdown shall list quantities and unit prices for materials, labor, equipment and other items of cost.

14.5.2 Whenever a change involves the Contractor and one (1) or more subcontractors and the change is an increase in the agreed compensation, the overhead and profit percentage for the Contractor and each subcontractor shall be itemized separately.

14.6 Time for the City to Approve Extra Work: Any Extra Work in an amount up to and not exceeding a cumulative amount of $25,000 for a specific project can be approved by the City Manager and shall require a written Change Order proposal to be submitted to the Public Works Director for submittal and approval by the City Manager. Extra Work exceeding the cumulative amount of $25,000 for a specific project must be approved by the City Commission and a written Change Order proposal must be submitted to the Public Works Director for submittal and approval by the City Manager and City Commission. No financial or time claim for delay to the project resulting from the Change Order approval process outlined above under Section 14.6 will be allowed.

ARTICLE 15 – CHANGE OF THE CONTRACT TIME

15.1 The Contract Time may only be changed by a Change Order. Any claim for an extension in the Contract Time shall be based on written notice delivered to the Project Manager within five (5) days of the occurrence of the event giving rise to the claim. Any change in the Contract Time resulting from any such claim shall be incorporated in a Change Order.

15.2 The Contract Time will be extended in an amount equal to time lost due to delays beyond the control of the Contractor if a claim is made there for as provided in Paragraph 15.1. Such delays shall include but not be limited to, acts or neglect by the City, or to fires, floods, labor disputes, epidemics, abnormal weather conditions, or acts of God.

15.3 All time limits stated in the Contract Documents are of the essence. The provisions of this Article 15 shall not exclude recovery for damages for delay by the Contractor.

15.4 Delays caused by or resulting from entities, contractors or subcontractors who are not affiliated with the CONTRACTOR (non-affiliated Contractors) shall not give rise to a claim by the CONTRACTOR for damages for increases in material and/or labor costs. Such entities, contractors and subcontractors include, but are not limited to, the City's

contractors and subcontractors, Florida Power and Light Company, AT&T and Florida East Coast Railway, LLC.

15.5 Rights of Various Interests: Whenever work being done by City's forces or by other contractors is contiguous to or within the limits of work covered by this Contract, the respective rights of the various interests involved shall be established by the Project Manager to secure the completion of the various portions of the work in general harmony.

ARTICLE 16 – LIQUIDATED DAMAGES

16.1 Upon failure of the Contractor to complete the Work within the time specified for completion, the Contractor shall pay to the City the sum of **Two Thousand Dollars ($2,000.00)** for each and every calendar day that the completion of the Work is delayed beyond the time specified in this Agreement for completion, as fixed and agreed liquidated damages and not as a penalty, so long as the delay is caused by the Contractor. Should an act of God or the acts or omissions of the City, its agents or representatives, in derogation to the terms of this Agreement cause the delay, the Contractor shall not be responsible for the delay nor liquidated damages. Liquidated damages are fixed and agreed upon between the Parties, recognizing the impossibility of precisely ascertaining the amount of damages that will be sustained by the City as a consequence of such delay and both parties desiring to obviate any question of dispute concerning the amount of damages and the cost and effect of the failure of the Contractor to complete the Work on time. Liquidated damages shall apply separately to each portion of the Work for which a time of completion is given. The City shall have the right to deduct from or retain any compensation which may be due or which may become due and payable to the Contractor the amount of liquidated damages, and if the amount retained by the City is insufficient to pay in full such liquidated damages, the Contractor shall pay all liquidated damages in full. The Contractor shall be responsible for reimbursing the City, in addition to liquidated damages or other damages for delay, for all costs of engineering, architectural fees, and inspection and other costs incurred in administering the construction of the Project beyond the completion date specified or beyond an approved extension of time granted to the Contractor whichever is later. Delays caused by or resulting from entities, contractors or subcontractors who are not affiliated with the Contractor shall not give rise to a claim by Contractor for damages for increase in material and/or labor costs. Such entities, contractors and subcontractors include, but are not limited to, the City's contractors and subcontractors, Florida Power and Light Company, AT&T, and Florida East Coast Railway, LLC.

16.2 No Extended Damages: For other and additional good and valuable consideration the receipt and sufficiency of which is hereby acknowledged, the Contractor covenants and agrees that in the event of any delay of construction or for any reason, allegation or claim, and notwithstanding the reason of the delay, reason, claim or allegation or who caused them or the construction delay or whether they were caused by the City, that there will be no entitlement to Contractor to or for any direct or indirect financial damages or losses for extended corporate overhead impact, extended project overhead impacts, project support services, mobilization or demobilization or by whatever other label or legal concept or theory and types of names or labels or basis such claims may have, or any business damages or losses of whatever type or nature, and Contractor hereby waives any right to make any such claim or claims. This

provision will have application and effect when construction delays are anticipated and agreed upon by both the City and the Contractor.

ARTICLE 17 – SUSPENSION OF WORK AND TERMINATION

17.1 City May Suspend Work: The City may, at any time and without cause, suspend the Work or any portion of the Work for a period of not more than ninety (90) days by notice in writing to the Contractor which shall fix the date on which Work shall be resumed. The Contractor shall resume the Work on the date fixed. The Contractor will be allowed an increase in the Contract Price or an extension of the Contract Time, or both, directly attributable to any suspension, if the Contractor makes a claim as provided in Articles 14 and 15.

17.2 City's Right to Terminate Contract: The City may terminate this Agreement upon fifteen (15) calendar days' written notice upon the occurrence of any one or more of the following events:

17.2.1 If the Contractor commences a voluntary case or a petition is filed against the Contractor, under any chapter of the Bankruptcy Code, or if the Contractor takes any equivalent or similar action by filing a petition or otherwise under any other federal or state law in effect at such time relating to the bankruptcy or insolvency.

17.2.2 If the Contractor makes a general assignment for the benefit of creditors.

17.2.3 If a trustee, receiver, custodian or agent of the Contractor is appointed under applicable law or under Contract, whose appointment or authority to take charge of property of the Contractor is for the purpose of enforcing a lien against such property or for the purpose of general administration of such property for the benefit of the Contractor's creditors.

17.2.4 If Contractor fails to begin the Work within fifteen (15) calendar days after the Project Initiation Date, or fails to perform the Work with sufficient workers and equipment or with sufficient materials to ensure the prompt completion of the Work, or shall perform the Work unsuitably, or cause it to be rejected as defective and unsuitable, or shall discontinue the prosecution of the Work pursuant to the accepted schedule or if Contractor shall fail to perform any material term set forth in the Contract Documents, or from any other cause whatsoever shall not carry on the Work in an acceptable manner, Project Manager may give notice in writing to Contractor and its Surety of such delay, neglect or default, specifying the same.

17.2.5 If the Contractor repeatedly fails to make prompt payments to subcontractors or for labor, material or equipment.

17.2.6 If the Contractor repeatedly disregards proper safety procedures.

17.2.7 If the Contractor disregards any local, state or federal laws or regulations.

17.2.8 If the Contactor otherwise violates any provisions of this Agreement.

17.3 If Contractor, within a period of ten (10) calendar days after such notice, shall not proceed in accordance therewith, the City may exclude the Contractor from the Work site and take the prosecution of the Work out of the hands of the Contractor, and take possession of the Work and all of the Contractor's tools, appliances, construction equipment and machinery at the site and use them without liability to the City for trespass or conversion, incorporate in the Work all materials and equipment stored at the site or for which the City has paid the Contractor but which are stored elsewhere, and finish the Work as the City may deem expedient. In this instance, the Contractor shall not be entitled to receive any further compensation until the Work is finished.

17.3.1 If after notice of termination of Contractor's right to proceed, it is determined for any reason that Contractor was not in default, the rights and obligations of City and Contractor shall be the same as if the notice of termination had been issued pursuant to the Termination for Convenience clause as set forth in Section 17.5 below.

17.3.2 Upon receipt of Notice of Termination pursuant to Sections 17.2 or 17.5, Contractor shall promptly discontinue all affected work unless the Notice of Termination directs otherwise and deliver or otherwise make available to City all data, drawings, specifications, reports, estimates, summaries and such other information as may have been required by the Contract Documents whether completed or in process.

17.4 If the Contractor commits a default due to its insolvency or bankruptcy, the following shall apply:

17.4.1 Should this Agreement be entered into and fully executed by the parties, funds released and the Contractor (Debtor) files for bankruptcy, the following shall occur:

17.4.1.1 In the event the Contactor files a voluntary petition under 11 U.S.C. 301 or 302, or an order for relief is entered under 11 U.S.C. 303, the Contractor shall acknowledge the extent, validity, and priority of the lien recorded in favor of the City. The Contractor further agrees that in the event of this default, the City shall, at its option, be entitled to seek relief from the automatic stay pursuant to 11 U.S.C. 362. The City shall be entitled to relief from the automatic stay pursuant to 11 U.S.C. 362(d) (1) or (d) (2), and the Contactor agrees to waive the notice provisions in effect pursuant to 11 U.S.C. 362 and any applicable Local Rules of the United States Bankruptcy Court. The Contactor acknowledges that such waiver is done knowingly and voluntarily.

17.4.1.2 Alternatively, in the event the City does not seek stay relief, or if stay relief is denied, the City shall be entitled to monthly adequate protection payments within the meaning of 11 U.S.C. 361. The monthly adequate protection payments shall each be in an amount determined in accordance with the Note and Mortgage executed by the Contractor in favor of the City.

17.4.1.3 In the event the Contractor files for bankruptcy under Chapter 13 of Title 11, United States Code in additional to the foregoing provisions,

the Contractor agrees to cure any amounts in arrears over a period not to exceed twenty-four (24) months from the date of the confirmation order, and such payments shall be made in addition to the regular monthly payments required by the Note and mortgage. Additionally, the Contractor shall agree that the City is over secured and, therefore, entitled to interest and attorney's fees pursuant to 11 U.S.C. 506(b). Such fees shall be allowed and payable as an administrative expense. Further, in the event the Contractor has less than five (5) years of payments remaining on the Note, the Contractor agrees that the treatment afforded to the claim of the City under any confirmed plan of reorganization shall provide that the remaining payments shall be satisfied in accordance with the Note, and that the remaining payments or claim shall not be extended or amortized over a longer period than the time remaining under the Note.

17.4.2 Should this Agreement be entered into and fully executed by the parties, and the funds have not been forwarded to Contractor, the following shall occur:

17.4.2.1 In the event the Contractor files a voluntary petition pursuant to 11 U.S.C. 301 or 302, or an order for relief is entered under 11 U.S.C. 303., the Contractor acknowledges that the commencement of a bankruptcy proceeding constitutes an event of default under the terms of this Agreement. Further, the Contractor acknowledges that this Agreement constitutes an executory contract within the meaning of 11 U.S.C. 365. The Contractor acknowledges that this Agreement is not capable of being assumed pursuant to 11 U.S.C. 365(c)(2), unless the City expressly consents in writing to the assumption. In the event the City consents to the assumption, the Contractor agrees to file a motion to assume this Agreement within ten (10) days after receipt of written consent from the City, regardless of whether the bankruptcy proceeding is pending under Chapter 7, 11, or 13 of Title 11 of the United States Code. The Contractor further acknowledges that this Agreement is not capable of being assigned pursuant to 11 U.S.C. 365(b)(1).

17.5 Termination for Convenience: This Contract may be terminated for convenience in writing by City upon thirty (30) days written notice to Contractor (delivered by certified mail, return receipt requested) of intent to terminate and the date on which such termination becomes effective. In such case, Contractor shall be paid for all work executed and expenses incurred prior to termination in addition to termination settlement costs reasonably incurred by Contractor relating to commitments which had become firm prior to the termination. Payment shall include reasonable profit for work/services satisfactorily performed. No payment shall be made for profit for work/services which have not been performed.

17.6 Where the Contractor's service have been so terminated by the City, the termination shall not affect any rights of the City against the Contractor then existing or which may thereafter accrue. Any retention or payment of moneys due the Contractor by the City will not release the Contractor from liability.

17.7 The Contractor has no right, authority or ability to terminate the Work except for the wrongful withholding of any payments due the Contractor from the City.

ARTICLE 18 – DISPUTE RESOLUTION

18.1 Resolution of Disputes: Questions, claims, difficulties and disputes of whatever nature which may arise relative to the technical interpretation of the Contract Documents and fulfillment of this Agreement as to the character, quality, amount and value of any work done and materials furnished, or proposed to be done or furnished under or, by reason of, the Contract Documents which cannot be resolved by mutual agreement of Contract Administrator and Contractor shall be submitted to the Consultant for resolution. When either party has determined that a disputed question, claim, difficulty or dispute is at an impasse, that party shall notify the other party in writing and submit the question, claim, difficulty or dispute to the Consultant for resolution. The parties may agree to a proposed resolution at any time without the involvement and determination of the Consultant.

18.1.1 Consultant shall notify Contract Administrator and Contractor in writing of Consultant's decision within twenty-one (21) calendar days from the date of the submission of the question, claim, difficulty or dispute, unless Consultant requires time to gather information or allow the parties to provide additional information.

18.1.2 In the event the determination of a dispute by the Consultant under this Article is unacceptable to any of the parties hereto, the party objecting to the determination must notify the other party and the City Manager, in writing within ten (10) days after receipt of the determination. The notice must state the basis of the objection and the proposed resolution. Final resolution of such dispute shall be made by the City Manager. The City Manager's decision shall be final and binding on the parties.

18.1.3 All non-technical administrative disputes (such as billing and payment) shall be determined by Contract Administrator.

18.1.4 During the pendency of any dispute and after a determination thereof, Contractor, Consultant, and Contract Administrator shall act in good faith to mitigate any potential damages including utilization of construction schedule changes and alternate means of construction. During the pendency of any dispute arising under this Agreement, other than termination herein, Contractor shall carry on the Work and adhere to the progress schedule. The Work shall not be delayed or postponed pending resolution of any disputes or disagreements.

18.1.5 For any disputes which remain unsolved, within sixty (60) calendar days after Final Completion of the Work, the parties shall participate in mediation to address all unresolved disputes. A mediator shall be mutually agreed upon by the parties. Should any objection not be resolved in mediation, the parties retain all their legal rights and remedies under applicable law. If a party objecting to a determination, fails to comply in strict accordance with the requirements of this Article, said party specifically waives all of its rights provided hereunder, including its rights and remedies under applicable law.

ARTICLE 19 – NOTICES

19.1 All notices required by any of the Contract Documents shall be in writing and shall be deemed delivered upon mailing by certified mail, return receipt requested to the following:

To the City:

City Manager
City of Fort Lauderdale
100 North Andrews Avenue
Fort Lauderdale, Florida 33301

with copy to the:

Project Manager
City of Fort Lauderdale
100 North Andrews Avenue
Fort Lauderdale, Florida 33301

with copy to the:

City Attorney
City of Fort Lauderdale
100 North Andrews Avenue
Fort Lauderdale, Florida 33301

To the Contractor:

_____
_____
_____
_____

ARTICLE 20 – LIMITATION OF LIABILITY

20.1 The City desires to enter into this Agreement only if in so doing the City can place a limit on the City's liability for any cause of action arising out of this Agreement, so that the City's liability for any breach never exceeds the sum of $1,000. For other good and valuable consideration, the receipt and sufficiency of which is hereby acknowledged, the Contractor expresses its willingness to enter into this Agreement with the knowledge that the Contractor's recovery from the City to any action or claim arising from the Agreement is limited to a maximum amount of $1,000, which amount shall be reduced by the amount actually paid by the City to the Contractor pursuant to this Agreement, for any action or claim arising out of this Agreement. Nothing contained in this paragraph or elsewhere in this Agreement is in any way intended either to be a waiver of the limitation placed upon the City's liability as set forth in Section 768.28, Florida Statutes, or to extend the City's liability beyond the limits established in said Section 768.28; and no claim or award against the City shall

include attorney's fees, investigative costs, expert fees, suit costs or pre-judgment interest.

20.2 No Extended Damages: For other and additional good and valuable consideration the receipt and sufficiency of which is hereby acknowledged, the Contractor covenants and agrees that in the event of any delay of construction or for any reason, allegation or claim, and notwithstanding the reason of the delay, reason, claim or allegation or who caused them or the construction delay or whether they were caused by the City, that there will be no entitlement to Contractor to or for any direct or indirect financial damages or losses for extended corporate overhead impact, extended project overhead impacts, project support services, mobilization or demobilization or by whatever other label or legal concept or theory and types of names or labels or basis such claims may have, or any business damages or losses of whatever type or nature, and Contractor hereby waives any right to make any such claim or claims. This provision will have application and effect when construction delays are anticipated and agreed upon by both the City and the Contractor.

ARTICLE 21 – GOVERNING LAW

21.1 This Agreement shall be governed by the laws of the State of Florida. Both Parties agree that the courts of the State of Florida shall have jurisdiction of any claim arising in connection with this Agreement. Venue for any claim, objection or dispute arising out of this Agreement shall be in Broward County, Florida. **By entering into this Contract, Contractor and City hereby expressly waive any rights either party may have to a trial by jury or any civil litigation related to, or arising out of the Project. Contractor shall specifically bind all subcontractors to the provisions of this Contract.**

ARTICLE 22 – MISCELLANEOUS

22.1 The duties and obligations imposed by this Agreement and the rights and remedies available to the parties and, in particular but without limitation, the warranties, guaranties and obligations imposed upon the Contractor and all of the rights and remedies available to the City, are in addition to, and are not to be construed in any way as a limitation of, any rights and remedies available to any or all of them which are otherwise imposed or available by laws or regulations, by special warranty or guarantee or by other provisions of the Contract Documents, and the provisions of this Paragraph will be as effective as if repeated specifically in the Contract Documents, and the provisions of this Paragraph will survive final payment and termination or completion of this Agreement.

22.2 The Contractor shall not assign or transfer this Agreement or its rights, title or interests. The obligations undertaken by the Contractor pursuant to this Agreement shall not be delegated or assigned to any other person or firm. Violation of the terms of this Paragraph shall constitute a material breach of Agreement by the Contractor and the City any, at its discretion, cancel this Agreement and all rights, title and interest of the Contractor which shall immediately cease and terminate.

22.3 The Contractor and its employees, volunteers and agents shall be and remain an independent contractors and not agents or employees of the City with respect to all of the acts and services performed by and under the terms of this Agreement. This

Agreement shall not in any way be constructed to create a partnership, association or any other kind of joint undertaking or venture between the Parties.

22.4 The City reserves the right to audit the records of the Contractor relating in any way to the Work to be performed pursuant to this Agreement at any time during the performance and term of this Agreement and for a period of three (3) years after completion and acceptance by the City. If required by the City, the Contractor agrees to submit to an audit by an independent certified public accountant selected by the City. The Contractor shall allow the City to inspect, examine and review the records of the Contractor at any and all times during normal business hours during the term of this Agreement.

22.5 The remedies expressly provided in this Agreement to the City shall not be deemed to be exclusive but shall be cumulative and in addition to all other remedies in favor of the City now or later existing at law or in equity.

22.6 Should any part, term or provisions of this Agreement be decided by the courts to be invalid, illegal or in conflict with any state or federal law, the validity of the remaining portion or provision shall not be affected.

22.7 Prohibition Against Contracting With Scrutinized Companies: Subject to *Odebrecht Construction, Inc., v. Prasad*, 876 F.Supp.2d 1305 (S.D. Fla. 2012), *affirmed*, *Odebrecht Construction, Inc., v. Secretary, Florida Department of Transportation*, 715 F.3d 1268 (11th Cir. 2013), with regard to the "Cuba Amendment," the Contractor certifies that it is not on the Scrutinized Companies with Activities in Sudan List or the Scrutinized Companies with Activities in the Iran Petroleum Energy Sector List or the Scrutinized Companies that Boycott Israel List created pursuant to Section 215.4725, Florida Statutes (2018), that it is not engaged in a boycott of Israel, and that it does not have business operations in Cuba or Syria, as provided in section 287.135, Florida Statutes (2018), as may be amended or revised. The City may terminate this Agreement at the City's option if the Contractor is found to have submitted a false certification as provided under subsection (5) of section 287.135, Florida Statutes (2018), as may be amended or revised, or been placed on the Scrutinized Companies with Activities in Sudan List or the Scrutinized Companies with Activities in the Iran Petroleum Energy Sector List or the Scrutinized Companies that Boycott Israel List created pursuant to Section 215.4725, Florida Statutes (2018), or is engaged in a boycott of Israel or has been engaged in business operations in Cuba or Syria, as defined in Section 287.135, Florida Statutes (2018), as may be amended or revised.

22.8 Public Entity Crimes: In accordance with the Public Crimes Act, Section 287.133, Florida Statutes, a person or affiliate who is a contractor, consultant or other provider, who has been placed on the convicted vendor list following a conviction for a public entity crime may not submit a bid on a contract to provide any goods or services to the City, may not submit a bid on a contract with the City for the construction or repair of a public building or public work, may not submit bids on leases of real property to the City, may not be awarded or perform work as a contractor, supplier, subcontractor, or consultant under a contract with the City, and may not transact any business with the City in excess of the threshold amount provided in Section 287.017, Florida Statutes, for category two purchases for a period of thirty-six (36) months from the date of being placed on the convicted vendor list. Violation of this section by Contractor shall result in cancellation of the City purchase and may result in Contractor debarment.

22.9 Attorney Fees: If CITY or CONSULTANT incurs any expense in enforcing the terms of this Agreement through litigation, the prevailing party in that litigation shall be reimbursed for all such costs and expenses, including but not limited to court costs, and reasonable attorney fees incurred during litigation.

22.10 Public Records

IF THE CONTRACTOR HAS QUESTIONS REGARDING THE APPLICATION OF CHAPTER 119, FLORIDA STATUTES, TO THE CONTRACTOR'S DUTY TO PROVIDE PUBLIC RECORDS RELATING TO THIS CONTRACT, CONTACT THE CUSTODIAN OF PUBLIC RECORDS AT PRRCONTRACT@FORTLAUDERDALE.GOV, 954-828-5002, CITY CLERK'S OFFICE, 100 N. ANDREWS AVENUE, FORT LAUDERDALE, FLORIDA 33301.

Contractor shall:

1. Keep and maintain public records required by the City in order to perform the service.

2. Upon request from the City's custodian of public records, provide the City with a copy of the requested records or allow the records to be inspected or copied within a reasonable time at a cost that does not exceed the cost provided in Chapter 119, Florida Statutes (2018), as may be amended or revised, or as otherwise provided by law.

3. Ensure that public records that are exempt or confidential and exempt from public records disclosure requirements are not disclosed except as authorized by law for the duration of the contract term and following completion of this contract if the Contractor does not transfer the records to the City.

4. Upon completion of the Contract, transfer, at no cost, to the City all public records in possession of the Contractor or keep and maintain public records required by the City to perform the service. If the Contractor transfers all public records to the City upon completion of this Contract, the Contractor shall destroy any duplicate public records that are exempt or confidential and exempt from public records disclosure requirements. If the Contractor keeps and maintains public records upon completion of this Contract, the Contractor shall meet all applicable requirements for retaining public records. All records stored electronically must be provided to the City, upon request from the City's custodian of public records, in a format that is compatible with the information technology systems of the City.

Replacement of Pump Station D-38
(Contractor)
Project 12390

CITY

IN WITNESS OF THE FOREGOING**,** the parties have set their hands and seals the day and year first written above.

CITY OF FORT LAUDERDALE, a municipal corporation of the State of Florida

By: _____
CHRISTOPHER J. LAGERBLOOM
City Manager

(CORPORATE SEAL)

ATTEST:

By: _____
JEFFREY A. MODARELLI
City Clerk

Approved as to Legal Form:

By:_____
RHONDA MONTOYA HASAN
Assistant City Attorney

CONTRACTOR

WITNESSES:

CONTRACTOR.,
a Florida corporation.

BY:_____

_____
Print Name

_____ _____
PRINT NAME Title

_____

_____
Print Name

(CORPORATE SEAL)

STATE OF FLORIDA:
COUNTY OF BROWARD:

The foregoing instrument was acknowledged before me this _____ day of_____, 2019, by _____(Name), as _____ (Title) of_____(CONTRACTOR), a Florida corporation, on behalf of the Corporation.

SEAL

_____
Notary Public, State of Florida

_____
Name of Notary Typed, Printed or Stamped

☐ Personally Known or ☐ Produced Identification:

Type of Identification Produced: _____

GENERAL CONDITIONS

Unless otherwise modified in the projects special conditions, the following General Conditions shall be part of the Contract:

GC - 01 - DEFINITIONS - The following words and expressions, or pronouns used in their stead, shall wherever they appear in the Contract and the Contract Documents, be construed as follows:

"Addendum" or "Addenda" - shall mean the additional Contract provisions issued in writing, by the Engineer, prior to the receipt of bids.

"Bid" – shall mean the offer or proposal of the Bidder submitted on the prescribed form setting forth the prices for the Work to be performed.

"Bidder" – shall mean any person, firm, company, corporation or entity submitting a Bid for the Work.

"Bonds" –shall mean Bid, performance and payment bonds and other instruments of security, furnished by Contractor and his surety in accordance with the Contract Documents.

“City” – shall mean the City of Fort Lauderdale, Florida, a Florida municipal corporation. In the event the City exercises its regulatory authority as a government body, the exercise of such regulatory authority and the enforcement of any rules, regulations, codes, laws and ordinances shall be deemed to have occurred pursuant to City’s authority as a governmental body and shall not be attributable in any manner to the City as a party to this Contract. For the purpose of this Contract, “City” without modification shall mean the City Commission, and/or City Manager or his/her designee(s) as applicable.

“Construction Manager” - shall mean the Public Works Director or his/her designee.

“Construction Project Manager” - shall mean the Public Works Director or his/her designee.

"Consultant" – shall mean a person, firm, company, corporation or other entity employed by the City to perform the professional services for the project.

“Contract Work” - shall mean everything expressed or implied to be required to be furnished and furnished by the Contractor by any one or more of the parts of the Contract Documents referred to in the Contract hereof except Extra Work as hereinafter defined, it being understood that, in case of any inconsistency in or between any part or parts of this Contract, the Public Works Director shall determine which shall prevail.

“Design Documents” – shall mean the construction plans and specifications included as part of a Bid/Proposal Solicitation prepared either by the City or by the Consultant under a separate Agreement with the City.

“Engineer” - shall mean the Public Works Director or his/her designee.

"Extra Work" - shall mean work other than that required by the Contract.

"Inspector" – shall mean an authorized representative of the City assigned to make necessary inspections of materials furnished by Contractor and of the Work performed by Contractor.

"Notice" - shall mean written notice sent by certified United States Mail, return receipt requested, or sent by commercial express carrier with acknowledgement of delivery, or via fax or email, or by hand delivery with a request for a written receipt of acknowledgment of delivery and shall be served upon the Contractor either personally or to its place of business listed in the Bid.

“Owner” - shall mean the City of Fort Lauderdale.

“Project Manager” - shall mean the Public Works Director or his/her designee.

"Public Works Director" –shall mean the Public Works Director of the City of Fort Lauderdale, Florida or his/her designee(s).

"Site" - shall mean the area upon or in which the Contractor's operations are carried out and such other areas adjacent thereto as may be designated as such by the Public Works Director.

"Subcontractor" - shall mean any person, firm, company, corporation or other entity, other than employees of the Contractor, who or which contracts with the contractor, to furnish, or actually furnishes labor and materials, or labor and equipment, or labor, materials and equipment at the site.

"Surety" - shall mean any corporation or entity that executes, as Surety, the Contractor's performance and payment bond securing the performance of this Contract.

GC - 02 - SITE INVESTIGATION AND REPRESENTATION - The Contractor acknowledges that it has satisfied itself as to the nature and location of the Work under the Contract Documents, the general and local conditions of the Site, particularly those bearing upon availability of transportation, disposal, handling and storage of materials, availability of labor, water, electric power, and roads, the conformation and conditions at the ground based on City provided reports, the type of equipment and facilities needed preliminary to and during the prosecution of the Work and all other matters which can in any way affect the Work or the cost thereof under the Contract Documents.

The Contractor acknowledges that it has conducted extensive tests, examinations and investigations and represents and warrants a thorough familiarization with the nature and extent of the Contract Documents, the Work, locality, soil conditions, moisture conditions and all year-round local weather and climate conditions (past and present), and, in reliance on such tests, examination and investigations conducted by Contractor and the Contractor’s experts, has determined that no conditions exist that would in any manner affect the Bid Price and that the project can be completed for the Bid Price submitted.

The Contractor, on its own, has made or caused to be made examinations, investigations, tests and studies of reports and related data in addition to those referred above, as Contractor deemed necessary to perform the Work at the Bid price set by the Contractor, within the contract time and in accordance with the other terms and conditions of the Contract Documents and the Bid made by the Contractor; and no additional examinations, investigations, tests, reports or similar data are, or will be, required by Contractor to assure that the Work can be done at the Bid price set by the Contractor.

The Contractor further acknowledges that it has satisfied itself based on any geotechnical reports the City may provide and inspection of the project Site as to the character, quality, and quantity of surface and subsurface materials to be encountered from inspecting the site and from evaluating information derived from exploratory work that may have been done by the City or included in the

Contract Documents and finds and has further determined that no conditions exist that would in any manner affect the Bid price and that the project can be completed for the Bid price submitted.

Any failure by the Contractor to acquaint itself with all the provided information and information obtained by visiting the project Site will not relieve Contractor from responsibility for properly estimating the difficulty or cost thereof under the Contract Documents. In the event that the actual subsurface conditions vary from the actual City provided reports, the Contractor shall notify the City and the Contract amount may be adjusted depending on the conditions, at the approval of the City.

GC - 03 - SUBSTITUTIONS - If the Contractor desires to use materials and/or products of manufacturer's names different from those specified in the Contract Documents, the Bidder requesting the substitution shall make written application as described herein. The burden of proving the equality of the proposed substitution rests on the Bidder making the request. To be acceptable, the proposed substitution shall meet or exceed all expressed requirements of the Contract Documents and shall be submitted upon the Contractor's letterhead, in addition to the "Contractor's Request for Substitution" form provided by the Public Works Director. The following requirements shall be met in order for the substitution to be considered:

1. Requests for substitution shall reach the Public Works Director no less than ten (10) Working Days prior to the date set for opening of Bids; and

2. Requests for substitution shall be accompanied by such technical data, as the party making the request desires to submit. The Public Works Director will consider reports from reputable independent testing laboratories, verified experience records from previous users and other written information valid in the circumstances; and

3. Requests for substitution shall completely and clearly indicate in what respects the materials and/or products differ from those indicated in the Contract Documents; and

4. Requests for substitution shall be accompanied by the manufacturer's printed recommendations clearly describing the installation, use and care, as applicable, of the proposed substitutions; and

5. Requests for substitution shall be accompanied by a complete schedule of changes in the Contract Documents, if any, which must be made to permit the use of the proposed substitution.

If a proposed substitution is approved by the Public Works Director, an Addendum will be issued to prospective bidders not less than three (3) working days prior to the date set for opening of Bids. Unless substitutions are received and approved as described above, the successful Bidder shall be responsible for furnishing materials and products in strict accordance with the Contract Documents.

GC - 04 - CONTROL OF THE WORK - The Public Works Director shall have full control and direction of the Work in all respects. The Public Works Director and/or his authorized designee(s) shall, at all times, have the right to inspect the Work and materials. The Contractor shall furnish all reasonable facilities for obtaining such information, as the Public Works Director may desire respecting the quality of the Work and materials and the manner of conducting the Work. Should the Contractor be directed or permitted to perform night Work, or to vary the period which work is ordinarily carried on in the daytime, he shall give ample notice to the Public Works Director so that proper and adequate inspection may be provided. Such Work shall be done only under such regulations as are furnished in writing by the Public Works Director, and no extra compensation shall be allowed to the Contractor therefore. In the event of night work, the Contractor shall furnish

such light, satisfactory to the Public Works Director, as will insure proper inspection. Nothing herein contained shall relieve the Contractor from compliance with any and all City ordinances relating to noise or Work during prohibited hours.

The Contractor shall keep the Public Works Director informed, a reasonable time in advance, as to his need for grades and lines in order that the same may be furnished and all necessary measurements made for records and for payment with the minimum of inconvenience to the Public Works Director or of delay to the Contractor. The Contractor shall submit to the Public Works Director or Inspector on the job a written request outlining the streets, etc., for which the Contractor desires lines and grades. It is the intention not to delay the Work for the giving of lines and grades, but when necessary, work operations shall be suspended for such reasonable time as the Public Works Director may require for this purpose. However, such cost increases shall be authorized either by the City Manager and/or designee, or the City Commission based upon the purchasing threshold amounts provided for in Chapter 2 of the City of Fort Lauderdale's Code of Ordinances.

GC - 05 - SUBCONTRACTOR - The Contractor shall not sublet, in whole or any part of the Work without the written consent and approval of the Public Works Director. Within ten (10) days after official notification of starting date, the Contractor must submit in writing, to the Public Works Director, a list of all Subcontractors. No Work shall be done by any Subcontractor until such Subcontractor has been officially approved by the Public Works Director. A subcontractor not appearing on the original list will not be approved without written request submitted to the Public Works Director and approved by the Public Works Director. In all cases, the Contractor shall give his personal attention to the Work of the Subcontractors and the Subcontractor is liable to be discharged by the Contractor, at the direction of the Public Works Director, for neglect of duty, incompetence or misconduct.

Acceptance of any Subcontractor, other person, or organization by the Public Works Director shall not constitute a waiver of any right of Public Works Director to reject defective Work or Work not in conformance with the Contract Documents.

Contractor shall be fully responsible for all acts and omissions of his Subcontractors and of persons and organizations directly or indirectly employed by them and of persons and organizations for whose acts any of them may be liable to the same extent that he is responsible for the acts and omissions of persons directly employed by him. Nothing in the Contract Documents shall create any contractual relationship between City and any Subcontractor or other person or organization having a direct contract with Contractor, nor shall it create any obligation on the part of City to pay or to see to the payment of any moneys due to any Subcontractor or other person, or organization, except as may otherwise be required by law.

GC – 06 - **QUANTITIES** - It is mutually agreed that the proposal shows the approximate amounts only along with the Plans and the general location. It is also mutually agreed that no change will be made involving any departure from the general scheme of the Work and that no such change involving a material change in cost, either to the City or Contractor, shall be made, except upon written permission of the City. However, the Public Works Director shall have the right to make minor alternations in the line, grade, plan, form or materials of the Work herein contemplated any time before the completion of the same. That if such alterations shall diminish the quantity of the Work to be done, such alterations shall not constitute a claim for damages or anticipated profits. That if such alterations increase the amount of the Work to be done, such increase shall be paid for according to the quantity actually performed and at the unit price or prices stipulated therefore in the Contract.

The City shall, in all cases of dispute, determine the amount or quantity of the several kinds of Work which are to be paid for under this Contract, and shall decide all questions relative to the execution of the same, and such estimates and decisions shall be final and binding.

Any Work not herein specified, which might be fairly implied as included in the Contract, of which the City shall judge, shall be done by the Contractor without extra charge. However, such cost increases shall be authorized either by the City Manager and/or designee, or the City Commission based upon the purchasing threshold amounts provided for in Chapter 2 of the City of Fort Lauderdale's Code of Ordinances.

GC–07 - NO ORAL CHANGES - Except to the extent expressly set forth in the Contract, no change in or modification, termination or discharge of the Contract in any form whatsoever, shall be valid or enforceable unless it is in writing and signed by the parties charged, therewith or their duly authorized representative.

GC - 08 - PERMITS AND PROTECTION OF PUBLIC – Permits on file with the City and or those permits to be obtained shall be considered directive in nature and will be considered a part of this Contract. A copy of all permits shall be given to the City and become part of the Contract Documents. Terms of permits shall be met prior to acceptance of the Work and release of the final payment.

The Contractor shall be required to observe all the ordinances in relation to obtaining permits for occupying, excavating, or in any way obstructing the streets and alleys. He shall erect and maintain barricades and sufficient safeguards around all excavations, embankments or obstructions; he shall place sufficient warning lights at or near the Work; keep the same burning from sunset to sunrise, employ watchmen, and strictly obey all laws and ordinances controlling or limiting those engaged in similar work.

Where there are telephones, light or power poles, water mains, conduits, pipes or drains or other construction, either public or private, in or on the streets or alleys, the Work shall be so conducted that no interruption or delay will be caused in the operation or use of the same. Proper written notice shall be given, and all the facilities, afforded the owners of such construction encountered or likely to be encountered, as will enable them to preserve the same from injury.

The Contractor shall not be permitted to interfere with public travel and convenience by grading or tearing up streets indiscriminately, but the Work of constructing the various items in this contract shall proceed in an orderly, systematic and progressive manner.

Contractor shall not load nor permit any part of any structure to be loaded with weights that will endanger the structure, nor shall he subject any part of the Work to stresses or pressures that will endanger it.

Where lifting operations involving the use of specialized cranes are required as part of construction, Contractor must make undertake the following investigation and submit the results and documentation to the Engineer prior to commencing any lifting operations: marking a very specific area in the field for the placement of the crane; a drawing showing the limitations of the job operation (i.e. not over adjacent properties or pedestrian and high vehicular traffic areas);underground utility exploration in the vicinity of the crane location, which may include ground penetrating radar to identify voids or old pipe or other subsurface features that could lead to sudden failure; assessment of the underlying soil and roadway materials and a worst case analysis based on entire load being distributed on just one or two outriggers; provision of properly sized pads under the outriggers; loading charts from manufacturer showing allowable configurations/loads; and inspection to make sure crane operation is in accordance with the permit conditions.

GC - 09 - DISEASE REGULATIONS - The Contractor shall enforce all sanitary regulations and take all precautions against infectious diseases as the Public Works Director may deem necessary. Should any infectious or contagious diseases occur among his employees, he shall arrange for the immediate removal of the employee from the Site and isolation of all persons connected with the Work.

GC - 10 - CONTRACTOR TO CHECK PLANS, SPECIFICATIONS, AND DATA - The Contractor shall verify all dimensions, quantities, and details shown on the plans, supplementary drawings, schedules, or other data received from the Public Works Director, and shall notify the Public Works Director of all errors, omissions, conflicts and discrepancies found therein within three (3) working days of discovery. Failure to discover or correct errors, conflictions, or discrepancies shall not relieve the Contractor of full responsibility for unsatisfactory Work, faulty construction, or improper operation resulting there from nor from rectifying such condition at his own expense.

GC - 11 - SUPPLEMENTARY DRAWINGS - When, in the opinion of the Public Works Director, it becomes necessary to explain more fully the Work to be done, or to illustrate the work further, or to show any changes which may be required, drawings, known as supplementary drawings, with specifications pertaining thereto, will be prepared by the Public Works Director and copies will be given to the Contractor.

The supplementary drawings shall be binding upon the Contractor with the same force as the original Plans. Where such supplementary drawings require either less or more than the estimated quantities of work, credit to the City or compensations therefore to the Contractor shall be subject to the terms of the Contract.

GC - 12 - MATERIALS AND WORKMANSHIP - All material and workmanship shall, in every respect, be in conformity with approved modern practice and with prevailing standards of performance and quality. In the event of dispute the Public Works Director's decision shall be final. Wherever the Plans, specifications, Contract Documents, or the directions of the Public Works Director are unclear as to what is permissible and/or fail to note the quality of any Work, that interpretation will be made by the Public Works Director, which is in accordance with approved modern practice, to meet the particular requirements of the Contract.

In all cases, new materials shall be used, unless this provision is waived by notice from the City in writing.

GC - 13 - SAFEGUARDING MARKS - The Contractor shall safeguard all points, stakes, grade marks, monuments, and bench marks made or established on the Work, bear the cost of re-establishing same if disturbed, or bear the entire expense of rectifying Work improperly installed due to not maintaining or protecting or for removing without authorization, such established points, stakes and marks. The Contractor shall safeguard all existing and known property corners, monuments and marks not related to the Work and, if required, shall bear the cost of having them re-established by a licensed surveyor if disturbed or destroyed during the course of construction.

GC - 14 - EXISTING UTILITY SERVICE - All existing utility service shall be maintained with a minimum of interruption at the expense of the Contractor.

GC - 15 - JOB DESCRIPTION SIGNS – Contractor, at Contractor's expense, shall furnish, erect, and maintain suitable weatherproof signs on jobs over $100,000 containing the following information:

1. City Seal (in colors)
2. Project or Improvement Number
3. Job Description

4. Estimated Cost
5. Completion Date

Minimum size of sign shall be four feet high, eight feet wide and shall be suitably anchored. The entire sign shall be painted and present a pleasing appearance. Exact location of signs will be determined in the field. Two (2) signs will be required, one at each end of the job. All costs of this work shall be included in other parts of the work.

GC - 16 - FLORIDA EAST COAST RIGHT-OF-WAY - Whenever a City contractor is constructing within the Florida East Coast Railway Company's Right-of-Way, it will be mandatory that the contractor carry separate bodily injury and property damage insurance in the amounts as stated below. This insurance shall be taken out and maintained during the life of the Contract.

Bodily injury insurance in an amount not less than $500,000.00 for injuries, including wrongful death to any one person, and subject to the same limit for each person, in an amount not less than $1,000,000.00 on account of any one occurrence, and

Property damage insurance in an amount not less than $500,000.00 for damages on account of any one occurrence and in an amount not less than $1,000,000.00 for damages on account of all occurrences.

GC - 17 - ACCIDENTS - The Contractor shall provide such equipment and facilities as are necessary and/or required, in the case of accidents, for first aide services to be provided to a person who may be injured during the project duration. The Contractor shall also comply with the OSHA requirements as defined in the United States Labor Code 29 CFR 1926.50.

In addition, the Contractor must report immediately to the Public Works Director every accident to persons or damage to property, and shall furnish in writing full information, including testimony of witnesses regarding any and all accidents.

GC - 18 - SAFETY PRECAUTIONS - Contractor must adhere to the applicable environmental protection guidelines for the duration of a project. If hazardous waste materials are used, detected or generated at any time, the Project Manager must be immediately notified of each and every occurrence. The Contractor shall comply with all codes, ordinances, rules, orders and other legal requirements of public authorities (including OSHA, EPA, DERM, the City, Broward County, State of Florida, and Florida Building Code), which bear on the performance of the Work.

The Contractor shall take the responsibility to ensure that all Work is performed using adequate safeguards, including but not limited to: proper safe rigging, safety nets, fencing, scaffolding, barricades, chain link fencing, railings, barricades, steel plates, safety lights, and ladders that are necessary for the protection of its employees, as well as the public and City employees. All riggings and scaffolding shall be constructed with good sound materials, of adequate dimensions for their intended use, and substantially braced, tied or secured to ensure absolute safety for those required to use it, as well as those in the vicinity. All riggings, scaffolding, platforms, equipment guards, trenching, shoring, ladders and similar actions or equipment shall be OSHA approved, as applicable, and in accordance with all Federal, State and local regulations.

GC - 19 - DUST PREVENTION - The Contractor shall, by means of a water spray, or temporary asphalt pavement, take all necessary precautions to prevent or abate a dust nuisance arising from dry weather or Work in an incomplete stage. All costs of this Work shall be included in cost of other parts of the Work.

Should the Contractor fail to abate a dust nuisance by the above methods, and then he will be required to immediately construct temporary patches per City standards.

GC - 20 - PLACING BARRICADES AND WARNING LIGHTS - The Contractor shall furnish and place, at his own expense, all barricades, warning lights, automatic blinker lights and such devices necessary to properly protect the work and vehicular and pedestrian traffic. Should the Contractor fail to erect or maintain such barricades, warning lights, etc., the Public Works Director may, after 24 hours' notice to the Contractor, proceed to have such barricades and warning lights placed and maintained by City or other forces and all costs incurred thereof charged to the Contractor and may be retained by the City from any monies due, or to become due, to the Contractor.

GC - 21 - TRAFFIC CONTROL - The Contractor shall coordinate all Work and obtain, through the City's Transportation and Mobility Department, Broward County, Florida Department of Transportation, as applicable, any permits required to detour traffic or close any street before starting to work in the road. The following section: Part VI Traffic Controls for Street and Highway Construction and Maintenance Operations, MANUAL ON UNIFORM TRAFFIC CONTROL DEVICES, U.S. Department of Transportation Federal Highway Administration, 2009, or current edition, shall be used as a guide for requirement and placement of traffic control devices, signs and barricades. The Public Works Director shall determine requirements for the above. The above publication is available from the Superintendent of Documents, U.S. Government Printing Office, Washington, D.C. 20402. In the event that a Maintenance of Traffic (MOT) Plan is required, the Plan shall be prepared by an A.A.S.T.A. certified technician.

All traffic control devices, flashing lights, signs and barricades shall be maintained in working condition at all times.

GC - 22 - COORDINATION - The Contractor shall notify all utilities, transportation department, etc., in writing, with a copy to the Public Works Director before construction is started and shall coordinate his Work with them. The Contractor shall cooperate with the owners of any underground or overhead utility lines in their removal, construction and rearrangement operations in order that services rendered by these parties will not be unnecessarily interrupted.

The Contractor shall arrange his Work and dispose of his materials so as to not interfere with the operation of other Contractors engaged upon adjacent work and to join his Work to that of others in a proper manner and to perform his Work in the proper sequence in relation to that of other Contractors all as may be directed by the Public Works Director.

Each Contractor shall be responsible for any damage done by him or his agents to the work performed by another Contractor.

The Contractor shall contact the Broward County Transportation Department and the Florida Department of Transportation, as applicable, to verify and obtain location of any and all traffic conduits, loops, and street light underground services.

GC - 23 - WATER - Bulk water used for construction, flushing pipelines, and testing shall be obtained from fire hydrants. Contractor shall make payment for hydrant meter at Treasury Billing Office, 1st Floor, City Hall, 100 N. Andrews Avenue. With the paid receipt, contractor can pick up hydrant meter at the utility location office. No connection shall be made to a fire hydrant without a meter connected.

GC - 24 - PROHIBITION AGAINST CONTRACTING WITH SCRUTINIZED COMPANIES - Subject to *Odebrecht Construction, Inc., v. Prasad*, 876 F.Supp.2d 1305 (S.D. Fla. 2012), *affirmed*, *Odebrecht Construction, Inc., v. Secretary, Florida Department of Transportation*, 715 F.3d 1268 (11th Cir. 2013), with regard to the "Cuba Amendment," the Contractor certifies that it is not on the Scrutinized Companies with Activities in Sudan List or the Scrutinized Companies with Activities in the Iran Petroleum Energy Sector List or the Scrutinized Companies that Boycott Israel List created pursuant to Section 215.4725, Florida Statutes (2018), that it is not engaged in a boycott

of Israel, and that it does not have business operations in Cuba or Syria, as provided in section 287.135, Florida Statutes (2018), as may be amended or revised. The City may terminate this Agreement at the City's option if the Contractor is found to have submitted a false certification as provided under subsection (5) of section 287.135, Florida Statutes (2018), as may be amended or revised, or been placed on the Scrutinized Companies with Activities in Sudan List or the Scrutinized Companies with Activities in the Iran Petroleum Energy Sector List or the Scrutinized Companies that Boycott Israel List created pursuant to Section 215.4725, Florida Statutes (2018), or is engaged in a boycott of Israel or has been engaged in business operations in Cuba or Syria, as defined in Section 287.135, Florida Statutes (2018), as may be amended or revised.

GC - 25 - LOCATION OF UNDERGROUND FACILITIES - If the Proposer, for the purpose of responding to this solicitation, requests the location of underground facilities through the Sunshine State One-Call of Florida, Inc. notification system or through any person or entity providing a facility locating service, and underground facilities are marked with paint, stakes or other markings within the City pursuant to such a request, then the Proposer shall be deemed non-responsive to this solicitation in accordance with Section 2-184(5) of the City of Fort Lauderdale Code of Ordinances.

GC - 26 – USE OF FLORIDA LUMBER TIMBER AND OTHER FOREST PRODUCTS - In accordance with Florida Statute 255.20 (3), The City specifies that lumber, timber, and other forest products used for this project shall be produced and manufactured in the state of Florida if such products are available and their price, fitness, and quality are equal. This requirement does not apply to plywood specified for monolithic concrete forms, if the structural or service requirements for timber for a particular job cannot be supplied by native species, or if the construction is financed in whole or in part from federal funds with the requirement that there be no restrictions as to species or place of manufacture.

The Bidder affirms by submitting a bid response to this solicitation that they will comply with section 255.20 (3) Florida Statutes.

GC – 27 – PUBLIC RECORDS/TRADE SECRETS/COPYRIGHT: The Proposer's response to the Solicitation is a public record pursuant to Florida law, which is subject to disclosure by the City under the State of Florida Public Records Law, Florida Statutes Chapter 119.07 ("Public Records Law"). The City shall permit public access to all documents, papers, letters or other material submitted in connection with this Solicitation and the Contract to be executed for this Solicitation, subject to the provisions of Chapter 119.07 of the Florida Statutes.

Any language contained in the Proposer's response to the Solicitation purporting to require confidentiality of any portion of the Proposer's response to the Solicitation, except to the extent that certain information is in the City's opinion a Trade Secret pursuant to Florida law, shall be void. If a Proposer submits any documents or other information to the City which the Proposer claims is Trade Secret information and exempt from Florida Statutes Chapter 119.07 ("Public Records Laws"), the Proposer shall clearly designate that it is a Trade Secret and that it is asserting that the document or information is exempt. The Proposer must specifically identify the exemption being claimed under Florida Statutes 119.07. The City shall be the final arbiter of whether any information contained in the Proposer's response to the Solicitation constitutes a Trade Secret. The City's determination of whether an exemption applies shall be final, and the proposer agrees to defend, indemnify, and hold harmless the City and the City's officers, employees, and agent, against any loss or damages incurred by any person or entity as a result of the City's treatment of records as public records. Proposals purporting to be subject to copyright protection in full or in part will be rejected.

EXCEPT FOR CLEARLY MARKED PORTIONS THAT ARE BONA FIDE TRADE SECRETS PURSUANT TO FLORIDA LAW, DO NOT MARK YOUR RESPONSE TO THE SOLICITATION AS PROPRIETARY OR CONFIDENTIAL. DO NOT MARK YOUR RESPONSE TO THE SOLICITATION OR ANY PART THEREOF AS COPYRIGHTED.

IF THE CONTRACTOR HAS QUESTIONS REGARDING THE APPLICATION OF CHAPTER 119, FLORIDA STATUTES, TO THE CONTRACTOR'S DUTY TO PROVIDE PUBLIC RECORDS RELATING TO THIS CONTRACT, CONTACT THE CUSTODIAN OF PUBLIC RECORDS AT:

Telephone Number: **(954) 828-5002**

Mailing Address: **City Clerk's Office**
100 N. Andrews Avenue
Fort Lauderdale, FL 33301

E-mail: **prrcontract@fortlauderdale.gov**

Contractor shall:

1. Keep and maintain public records required by the City in order to perform the service.

2. Upon request from the City's custodian of public records, provide the City with a copy of the requested records or allow the records to be inspected or copied within a reasonable time at a cost that does not exceed the cost provided in Chapter 119, Florida Statutes (2018), as may be amended or revised, or as otherwise provided by law.

3. Ensure that public records that are exempt or confidential and exempt from public records disclosure requirements are not disclosed except as authorized by law for the duration of the contract term and following completion of this contract if the Contractor does not transfer the records to the City.

4. Upon completion of the Contract, transfer, at no cost, to the City all public records in possession of the Contractor or keep and maintain public records required by the City to perform the service. If the Contractor transfers all public records to the City upon completion of this Contract, the Contractor shall destroy any duplicate public records that are exempt or confidential and exempt from public records disclosure requirements. If the Contractor keeps and maintains public records upon completion of this Contract, the Contractor shall meet all applicable requirements for retaining public records. All records stored electronically must be provided to the City, upon request from the City's custodian of public records, in a format that is compatible with the information technology systems of the City.

EXHIBIT

CITY OF FORT LAUDERDALE
CONTRACT AND SPECIFICATIONS PACKAGE

BID NO. 12305-493
PROJECT NO. 12390

REPLACEMENT OF PUMP STATION D38

Issued on Behalf of: The City of Fort Lauderdale

100 North Andrews Avenue
Fort Lauderdale, Florida 33301

Penelope Burger, CPPB
PROCUREMENT ADMINISTRATOR
Telephone: (954) 828-5189 E-mail: PBurger@fortlauderdale.gov

SECTION 01010 SUMMARY OF WORK

PART 1 - GENERAL

1.01 DESCRIPTION

A. This section includes general descriptions of the CONTRACTORS use of site, location and description of work, work sequence, owner occupancy and work by others.

1.02 RELATED SECTIONS

A. Section 01011 – Special Project Procedures

B. Section 01012 – Measurement and Payment

C. Section 01015 – General Requirements

D. Section 01505 – Control of Work

E. Other Sections as applicable.

1.03 REFERENCES (NOT USED)

1.04 CONTRACTOR USE OF SITE

A. The CONTRACTOR shall limit area of work to remain within those properties and easements as depicted in the DRAWINGS or as approved in writing by the CITY.

B. CONTRACTOR's use of lands other than those depicted in the DRAWINGS shall require written approval from the land owner and be at the CONTRACTOR's risk and cost.

1.05 LOCATION OF WORK

A. The work is primarily located at the intersection of Las Olas Boulevard and SE 25th Avenue in the City of Fort Lauderdale, Florida.

1.06 DESCRIPTION OF WORK

The following is a general list of the work included. It is not intended to be complete. Reference the DRAWINGS and specifications for all contract requirements.

A. Rehabilitate existing wetwell and valve vault structure.

B. Construct new pumps station pumps and appurtenances.

C. Removal and replacement of existing sanitary sewer submersible pumps, appurtenances and electrical equipment

D. Upgrade existing electrical service, including coordination with FP&L.

E. By-pass pumping of existing sanitary flows.

1.07 WORK SEQUENCE

A. Construct and redirect gravity sewer network to the existing force main (temporary by-pass pumping).

B. Construct and place into service proposed sanitary sewer force main.

C. Removal of existing sanitary sewer force main.

D. Demolish infrastructure for sanitary sewer Pump Station D-38 and all associated sewer piping as.

E. Rehabilitate sanitary sewer pump station D-38.

F. Remove temporary by-pass pumping.

G. Complete landscaping and irrigation modifications.

H. Restore work area.

I. Mill and resurface project area including pavement marking and signage.

1.08 OWNER OCCUPANCY

A. Cooperate with Owner to minimize conflict, and to facilitate Residences and Owner's operations.

B. Schedule the Work to accommodate this requirement.

1.09 WORK BY OTHERS

A. The CONTRACTOR is advised that work by others may take place during the duration of the contract time. It shall be the CONTRACTOR's responsibility to coordinate and schedule all work as not to delay or hinder his work or the work by others.

PART 2 - PRODUCTS (NOT USED)

PART 3 - EXECUTION (NOT USED)

END OF SECTION

SECTION 01011 SPECIAL PROJECT PROCEDURES

PART 1 - GENERAL

1.01 DESCRIPTION

A. This Section provides for provisions which are specific to the Work.

1.02 RELATED SECTIONS

A. Section 01015 – General Requirements

B. Section 01531 – Protection of Existing Property

C. Section 01570 – Traffic Regulation

D. Other Sections as applicable.

1.03 EQUIPMENT, TESTING & INSPECTION

A. Regardless of the number of days specified in the individual sections for the manufacturer's representative to be present on the site for inspection and testing, if the equipment fails to perform as specified, then the representative shall remain on site until the malfunction is corrected.

B. Any and all cost for additional days due to equipment failure shall be the responsibility of the CONTRACTOR.

1.04 ADJACENT PROPERTY OWNER NOTIFICATION

A. The CONTRACTOR shall prepare a written notice to property owners adjacent to the project work site notifying them of the schedule of work affecting them and anticipated inconveniences they may expect. The notice shall meet the approval of the ENGINEER and be delivered to property owners at least 72 hours prior to construction adjacent to their property. This notice shall indicate the work to be performed, the time it will take to perform the work, and times of service disruption. Property owners within a 500' radius shall be notified. The CONTRACTOR shall coordinate outreach activities with the CITY and the ENGINEER.

1.05 RIGHTS-OF-WAY

A. The CONTRACTOR shall not do any work that would affect any oil, gas, sewer, or water pipeline; any telephone, or electric transmission line; any fence; or any other structure, nor shall the CONTRACTOR enter upon the rights-of-way involved until notified by the ENGINEER that the CITY has secured authority therefore from the proper party. After authority has been obtained, the CONTRACTOR shall provide said party due notice of its intention to begin work, if required by said party, and shall remove, shore, support, or otherwise protect such pipeline, transmission line, ditch, fence, or structure or replace the same. When two or more contracts are being executed at one time on the same or adjacent land in such manner that work on one contract may interfere with that on another, the CITY shall determine the sequence and order of the work. When the territory of one contract is the necessary or convenient means of access for the execution of another contract, such privilege of access or any other reasonable privilege may be granted by the Owner to the CONTRACTOR so desiring, to the extent and amount, and in the manner and at the times permitted. No such decision as to the method or time of conducting the work or the use of territory shall be made the basis of any claim for delay or damage.

1.06 PROTECTION OF STREET OR ROADWAY MARKERS

A. The CONTRACTOR shall not destroy, remove, or otherwise disturb any existing survey markers or other existing street or roadway markers without prior written authorization from the CITY. No pavement breaking or excavation shall be started until all survey or other permanent marker points that will be disturbed by the construction operations have been properly referenced for easy and accurate restoration. It shall be the CONTRACTOR's responsibility to notify the CITY, with at least 72 hours advance notice, of the time and location that work will be done. Such notification shall minimize delay due to waiting for survey points to be satisfactorily referenced for restoration. All survey markers or points disturbed by the CONTRACTOR without proper authorization and notification by the ENGINEER will be accurately restored by the CITY at the CONTRACTOR's expense after all street or roadway resurfacing has been completed.

PART 2 - PRODUCTS (NOT USED)

PART 3 - EXECUTION (NOT USED)

END OF SECTION

SECTION 01012 MEASUREMENT AND PAYMENT

PART 1 - GENERAL

1.01 DESCRIPTION

A. Payment for various items of the Bid Schedule, as further specified herein, shall include all compensation to be received by the CONTRACTOR for furnishing all tools, equipment, supplies, and manufactured articles, and for all labor operations and incidentals appurtenant to the items of WORK being described, as necessary to complete the various items of the WORK all in accordance with requirements of the Contract Documents, including all appurtenances thereto, and including all costs of permits and cost of compliance with the regulations of public agencies having jurisdiction, including Safety and Health Requirements of the Occupational Safety and Health Administration of the U.S. Department of Labor (OSHA). No separate payment will be made for any item that is not specifically set forth in the Bid Schedule, and all costs therefore shall be included in the prices named in the Bid Schedule for the various appurtenance items of WORK.

B. Payment for the various items of the Bid Schedule shall constitute full compensation for CONTRACTOR's superintendent at the job site full-time during construction, for furnishing and installing all pipe and structures complete in place including but not limited to rehabilitation of existing wetwell and valve vault, electrical control panels, by-pass pumping, bends, tees, outlets, fittings, blind flanges and specials, including connections to existing pipelines and wetwell shown on the DRAWINGS; including surveying both horizontal and vertical control for construction of the roadways, structures, pipeline and appurtenances; including all earthwork, excavation as shown on the DRAWINGS, removal and disposal of waste, unsuitable and excess material, furnishing and installing pipe bedding material, all backfill and compaction of native material, and dewatering as required; including potholing to verify locations of existing utilities in advance of construction; the restoration of interfering portions of the area adjacent to the existing pump station, existing service and utility lines that are not included in other bid items and shown on the DRAWINGS, including replacement of sewer lines with ductile iron pipe where the minimum vertical clearances are not met for the sewer line shown; restraint of pipe shown on the DRAWINGS and grouting of pipe joints; including providing the water for pressure testing, cleaning the pipe and disinfection, and disposal of the water as required when completed; furnishing, installation, and removal of test heads, cleanup; and restoration of all improvements incidental to construction for which there are no other bid items; including but not limited to, sprinkler systems, drainage systems, guardrails, landscaping, fences, curbs and gutters, and all other WORK not included in other bid items.

C. Payment shall also include providing the necessary equipment and labor to pothole and verify depths and locations of existing utilities sufficiently ahead of construction to avoid conflicts with the design alignment and grade of the transmission pipeline. Conflicts with utilities shown on the DRAWINGS which result from the CONTRACTOR's negligence to pothole sufficiently ahead of construction (a minimum of two days ahead of construction of the pipeline or as approved by the ENGINEER) shall be resolved by the CONTRACTOR at no additional cost to the CITY. Unmarked utilities damaged during construction will be paid under unit prices in the Bid Schedule for similar WORK, if and as approved by the ENGINEER.

D. Payment for all bid items shall constitute full compensation for the complete installation of each bid item including but not limited to excavation, dewatering, backfill and compaction.

The WORK shall include for all bid items to be completed, tested and ready for acceptance by the appropriate government agency.

1.02 PAYMENT REQUESTS

A. The format for Payment Requests shall be as directed by the ENGINEER. This shall include the level of breakdown and grouping of payment items.

B. The quantities for payment under this Contract shall be full compensation determined by actual measurement of the completed items, in place, ready for service and accepted by the CITY unless otherwise specified. The ENGINEER shall witness all field measurements.

1.03 BONDS AND INSURANCES – BID ITEM NO. 1

A. Payment for bonds and insurance will be made at the lump sum price named in the Bid Schedule. The CONTRACTOR may request payment for this bid item after the Initial Notice to Proceed has been issued.

B. Bonds and Insurance are limited to 3% of the Total Bid Items. Any amount in excess of 3% will be moved to Line Item No. 2, Mobilization, however, the total bid amount will not change. The 3% ceiling on Bonds and Insurance is not responsiveness, just an instruction on the amount the CITY will pay for Bonds and Insurance.

1.04 MOBILIZATION AND DEMOBILIZATION – BID ITEM NO. 2

A. The lump sum price bid for this item shall be full compensation for all mobilization and demobilization activities, including but not limited to scheduling, labor associated with permit acquisition, temporary facilities, audio-visual documentation of existing site, preparation and submittal of shop drawings, all other activities necessary to prepare to complete the contract WORK, demobilization and site cleanup.

B. Payment for mobilization will be made at the lump sum price named in the Bid Schedule. An initial lump sum partial payment of 40% of the Mobilization Pay Item shall be made upon completion of the items # 1 through 9 as outlined in Section 01550 paragraph 1.01. GENERAL, B. Payment of the remaining 60% for mobilization will be made in equal monthly amounts during the duration of the original contractual contract time and includes demobilization.

1.05 MAINTENANCE OF TRAFFIC – BID ITEM NO. 3

A. See Section 01570 "Traffic Regulations", Section 01110 "Summary of Work", and all other references to traffic control in this document and any regulatory requirements.

B. Payment for maintenance of traffic will be made at the lump sum price named in the Bid Schedule. Payment for maintenance of traffic will be made in equal monthly amounts during the duration of the contract time. Existing traffic signage shall be maintained and protected at all times. There shall be no additional payment for the replacement of existing traffic signage damaged during the execution of the project.

C. CONTRACTOR is hereby forewarned that CITY may not allow lane closures during peak hour or other times and may permit only one lane to be closed at any time, if at all. CONTRACTOR shall provide temporary traffic signals and/or portable changeable message signs in accordance with FDOT Standard Index 606, 24 hours per day, 7 days per week-including the appropriate staff to operate the traffic signals. Additional requirements may exist depending on the right-of-way owner. It is the responsibility of the CONTRACTOR to determine, prior to bidding, all MOT requirements of all agencies having jurisdiction and incorporate all such requirements into their prices bid, schedule and means and methods.

D. Furnishing and installing all temporary road, pedestrian facilities, all required traffic control devices, signs including portable changeable message signs, portable temporary signals, associated required accessories and staff, and law enforcement officers as required to maintain vehicular and pedestrian traffic, and all else necessary for a complete and functional Maintenance of Traffic operation, as required by the authority having jurisdiction, are to be included under this item. Demolition, removal and disposal of all temporary road and pedestrian facilities are also included in this line item.

1.06 PERMIT FEE ALLOWANCE – BID ITEM NO. 4

A. Payment for permit fees shall be based upon the actual permit fees required of the CONTRACTOR from the various agencies having jurisdiction for construction of the project, all in accordance with the Contract Documents. The allowance amount shown in the Bid Schedule is an estimate for the project and is a cost pass through item. The CONTRACTOR shall not add markup or overhead charges to these fees. All amounts remaining in this item upon competition of the project shall be credited to the CITY. Documentation verifying actual costs shall be submitted with the payment request.

1.07 FLORIDA POWER AND LIGHT (FP&L) FEES ALLOWANCE – BID ITEM NO. 5

A. Payment for Florida Power and Light (FP&L) fees shall be based upon the actual costs associated with obtaining electrical power from FP&L. The CONTRACTOR shall not add markup or overhead charges to these fees. The cost of the fee paid to FP&L shall be full compensation to the CONTRACTOR. All amounts remaining in this item upon completion of the project shall be credited to the CITY. Documentation verifying actual costs shall be submitted with the payment request.

1.08 LANDSCAPE AND IRRIGATION ALLOWANCE – BID ITEM NO. 6

A. The CONTRACTOR shall provide Landscape and Irrigation Plans, signed and sealed by a Florida Registered Landscape Architect, to the CITY for the improvements within the median where the sanitary sewer pump station is located. Landscape and Irrigation plans to be approved by the CITY. This item also includes payment for all labor, equipment and material required for executing approved Landscape and Irrigation plans. All amounts remaining in this item upon competition of the project shall be credited to the CITY. Only landscaping and irrigation modification costs substantiated by the CONTRACTOR and approved by the ENGINEER will be paid as part of this bid item.

1.09 BY-PASS PUMPING AT PUMP STATION D-38 – BID ITEM NO.7

A. Payment for By-pass pumping will be made at the lump sum price named in the Bid Schedule. Payment for By-pass pumping will be made in equal monthly amounts during the duration of the contract time.

B. Such amount represents the amount the CONTRACTOR determines is necessary to install, operate, maintain, and remove a by-pass pumping system staffed twenty-four (24) hours per day, seven (7) days per week, which includes the installation of a temporary gravity sewer plug, providing a stand-by pump, with sufficient capacity to pump into existing sanitary system, and a stand-by generator, with sufficient capacity to power the by-pass system, both on-site during the time the by-pass is active and required during the process of upgrading the pump station. This item includes two 48-hour performance test periods, to ensure that the by-pass system as installed is satisfactory to the ENGINEER and the CITY. The CONTRACTOR shall conduct the performance test prior to starting any demolition work. Once the pump station upgrades have been completed, the by-pass system must remain onsite and available for use for a total of 7 days after the pump station start up to

ensure that pump station performance is satisfactory to the ENGINEER and the CITY. Payment for this item shall include demobilization and removal of the by-pass pump system and all necessary repairs to return the site to a condition that existed prior to the by-pass pump system installation.

C. Should the CONTRACTOR fail to obtain temporary electric service in a timely manner to power the by-pass pump system, the CONTRACTOR shall be required to provide a diesel-powered redundant by-pass pump system at no additional cost to the CITY. A timely manner is considered equal to the period of time that will not impact the project's critical path schedule.

1.10 DEMOLITION WORK AT PUMP STATION D-38– BID ITEM NO.8

A. Measurement and payment for demolition work at pump station D-38 shall be made at the lump sum price named in the Bid Schedule, all in accordance with the requirements of the Contract Documents.

B. Payment for demolition work at pump station D-38 shall include full compensation for furnishing all labor, materials and equipment for the complete demolition, removal and disposal of items including but not limited to: cutting and plugging of existing sanitary sewer force main, existing pump station top slabs and hatches, existing pump station pumps, piping, fittings and appurtenances, pump station electrical and control panels, pull boxes, curb and gutter, concrete sidewalls and trees all in accordance with the Contract Documents.

1.11 REHABILITATION OF PUMP STATION D-38 – BID ITEM NO. 9

A. Measurement and payment for rehabilitation of pump station D-38 will be made at the lump sum price named in the Bid Schedule, all in accordance with the requirements of the contract documents

B. Payment for rehabilitation of pump station D-38 shall include full compensation for furnishing all labor, materials and equipment for the complete installation, testing, start up and operation of items including but not limited to: installation of grade rings for wetwell and valve vault, installation of new top slab and hatches for wetwell and valve vault, rehabilitation of wetwell and valve vault structures, internal coatings of structures, dewatering, installation of pumps, all piping, valves, fittings, couplings, pipe supports and appurtenances within the wetwell and valve vault, construction of concrete pad, installation of vent pipe, odor control unit and all other appurtenances all in accordance with the Contract Documents. This item includes all WORK not defined in other bid items.

C. If the CONTRACTOR deems it necessary to dewater, the CONTRACTOR is required to obtain a dewatering permit from Broward County Pollution Prevention, Remediation and Air Quality Division and adhere to any required groundwater well monitoring, sampling, cofferdams, or any other applicable permit conditions. This is in addition to a dewatering permit, if required, by South Florida Water Management District (SFWMD).

1.12 FURNISH AND INSTALL FORCE MAIN, 6", 8" & 10" PVC C-900 – BID ITEM NO. 10

A. Measurement and payment for furnishing and installing force main, 6", 8" & 10" PVC C-900 shall be made at the lump sum price named in the Bid Schedule, all in accordance with the requirements of the Contract Documents.

B. Payment for furnishing and installing force main, 6", 8" & 10" PVC C-900 shall include full compensation for furnishing all labor, materials and equipment for the installation of force main. Installation shall include: layout, fittings, restraints, excavation, trench preparation,

thrust blocks, dewatering, backfilling, compaction, subgrade, base rock, tack coats, asphalt paving, disposal of waste and excess material, connections to existing force main, connection to pump station D-38 piping, hydrostatic pressure testing, electronic markers (metal tape or wire), survey, producing record drawings in accordance with the Contract Documents, clean-up, necessary adjustments to existing utilities, and all other appurtenant work.

C. If the CONTRACTOR deems it necessary to dewater, the CONTRACTOR is required to obtain a dewatering permit from Broward County Pollution Prevention, Remediation and Air Quality Division and adhere to any required groundwater well monitoring, sampling, cofferdams, or any other applicable permit conditions. This is in addition to a dewatering permit, if required, by SFWMD.

D. The cost of labor, equipment, and material to de-muck or remove and properly dispose of any unsuitable soil organics as detailed in the Geotechnical Report shall be included in the Lump Sum Price.

1.13 FURNISH AND INSTALL SEWER 6" PLUG VALVES – BID ITEM NO. 11

A. Measurement for payment for furnishing and installing 6" plug valves shall be based upon the actually quantity, per each, installed all in accordance with the Contract Documents.

B. Payment for furnishing and installing plug valves will be made at the contract unit prices per each named in the Bid Schedule. Unit price shall constitute full payment for furnishing all labor, materials and equipment for the installation of plug valves, complete. Installation shall include layout, excavation, trench preparation, polyethylene encasement, zinc coating, thrust blocks, dewatering, backfilling, compaction, disposal of waste and excess material, hydrostatic pressure testing, electronic markers, clean-up and all other appurtenant work.

1.14 FURNISH AND INSTALL SEWER 8" PLUG VALVES – BID ITEM NO. 12

A. Measurement for payment for furnishing and installing 8" plug valves will be based upon the actually quantity, per each, installed all in accordance with the Contract Documents.

B. Payment for furnishing and installing plug valves will be made at the contract unit prices per each named in the Bid Schedule. Unit price shall constitute full payment for furnishing all labor, materials and equipment for the installation of plug valves, complete. Installation shall include layout, excavation, trench preparation, polyethylene encasement, zinc coating, thrust blocks, dewatering, backfilling, compaction, disposal of waste and excess material, hydrostatic pressure testing, electronic markers, clean-up and all other appurtenant work.

1.15 FURNISH AND INSTALL SEWER 10" PLUG VALVES – BID ITEM NO. 13

A. Measurement for payment for furnishing and installing 10" plug valves will be based upon the actually quantity, per each, installed all in accordance with the Contract Documents.

B. Payment for furnishing and installing plug valves will be made at the contract unit prices per each named in the Bid Schedule. Unit price shall constitute full payment for furnishing all labor, materials and equipment for the installation of plug valves, complete. Installation shall include layout, excavation, trench preparation, polyethylene encasement, zinc coating, thrust blocks, dewatering, backfilling, compaction, disposal of waste and excess material, hydrostatic pressure testing, electronic markers, clean-up and all other appurtenant work.

1.16 FURNISH AND INSTALL PUMP STATION D-38 ELECTRICAL SERVICE AND CONTROL PANEL – BID ITEM NO. 14

A. Measurement and payment for furnishing and installing pump station D-38 electrical service and control panel shall be made at the lump sum price named in the Bid Schedule, all in accordance with the requirements of the Contract Documents.

B. Payment for furnishing and installing pump station D-38 electrical service and control panels shall include full compensation for furnishing all labor, material and equipment for complete installation, testing and operation of items including but not limited to: new electrical service conduit and wiring, new pump station control panel, pull boxes, wiring and all appurtenances all in accordance with the Contract Documents .

1.17 MILLING AND RESURFACING OF ASPHALT PAVEMENT– BID ITEM NO. 15

A. Measurement for payment for milling and resurfacing of asphalt pavement shall be based upon the number of square yards of such asphalt pavement actually milled and resurfaced, as detailed in the Drawings, all in accordance with the requirements of the Contract Documents.

B. Payment for milling and resurfacing of asphalt pavement to a minimum thickness of 1 inch shall be made at the unit price per square yard for such milling and resurfacing as named in the Bid Schedule. This price shall constitute full compensation for milling and disposal of existing asphalt, applying a tack coat and furnishing, placing and compacting superpave asphalt to the full cross section of existing roadway, including temporary pavement markings and messages, milling and saw cutting of all pavement and all cleanup of the area disturbed by this construction all per CITY specifications.

1.18 SITE RESTORATION – BID ITEM NO. 16

A. Measurement and payment for site restoration shall be made at the lump sum price named in the Bid Schedule, all in accordance with the requirements of the Contract Documents.

B. Payment for site restoration shall include full compensation for furnishing all labor, materials and equipment for the complete site restoration in accordance with the Contract Documents. The lump sum price shall constitute complete restoration of surface disturbed by construction including: sodding, concrete sidewalk, ADA ramps, crosswalks, brick pavers, curb and gutter, rim and valve adjustments, reinforcement, temporary striping, removal of temporary striping, street sweeping, retro-reflective pavement markers, thermoplastic pavement markings, signage and bollards as required by the plans.

1.19 FURNISH AND INSTALL AIR RELEASE VALVE WITH MAINTENANCE ACCESS STRUCTURE – BID ITEM NO. 17

A. Measurement for payment to furnish and install air release valve with maintenance access structure shall be based upon the actual number, per each, of such air release valves with maintenance access structures installed all in accordance with the Contract Documents.

B. Payment for furnishing and installing air release valves with maintenance access structures shall be made at the unit price per each named in the Bid Schedule, which price shall constitute full compensation for the construction of air release valves with maintenance access structures, complete, including appurtenances.

C. Placement of air release valves shall be as ordered by ENGINEER after record drawings are submitted and reviewed.

PART 2 - PRODUCTS (NOT APPLICABLE)

PART 3 – EXECUTION (NOT APPLICABLE)

END OF SECTION

SECTION 01015 GENERAL REQUIREMENTS

PART 1 - GENERAL

1.01 DESCRIPTION

A. This Section provides for miscellaneous provisions applicable to the WORK.

1.02 RELATED SECTIONS

A. Section 01011 – Special Project Procedures

B. Section 01090 – References

C. Section 01112 - Permits

D. Section 01310 – Construction Schedules

E. Section 01340 – Shop Drawings, Working Drawings and Samples

F. Section 01530 –Existing Utilities

G. Section 01570 – Traffic Regulation

H. Section 01720 – Project Record Documents

I. Other Sections as applicable.

1.03 TERMINOLOGY

A. Throughout the Contract Documents, the following definitions apply:

1. CITY - The individual or entity with whom CONTRACTOR has entered into the Agreement and for whom the WORK is to be performed.

2. WORK - The entire construction or the various separately identifiable parts thereof required to be provided under the Contract Documents. WORK includes and is the result of performing or providing all labor, services, and documentation necessary to produce such construction, and furnishing, installing, and incorporating all materials and equipment into such construction, all as required by the Contract Documents.

1.04 SAFETY

A. All WORK shall be done in a safe manner and in strict compliance with all requirements of the Federal Occupational Safety and Health Act (OSHA), The Florida Trench Safety Act and all other State and local safety and health regulations.

B. The CONTRACTOR shall comply promptly with such safety regulations as may be prescribed by the CITY or the local authorities having jurisdiction and shall, when so directed, properly correct any unsafe conditions created by, or unsafe practices on the part of, their employees. In the event of the CONTRACTOR's failure to comply, the CITY may take the necessary measures to correct the conditions or practices complained of, and all costs thereof will be deducted from any monies due. Failure of the CITY to direct the correction of unsafe conditions or practices shall not relieve the CONTRACTOR of his responsibilities.

C. The CONTRACTOR shall provide, erect, and maintain as necessary, strong, and suitable barricades, danger signs and warning lights for the protection of the public in accordance with Section 01570 – Traffic Regulation.

1.05 APPLICABLE CODES

A. The CONTRACTOR shall comply with the applicable standards codes and specifications governing the Contract Documents whether City, County, State or Federal. The CONTRACTOR is obligated to notify the CITY and ENGINEER of any deficiency contained in the Contract Documents immediately upon discovery. Where conflicts exist in such, the more stringent shall govern.

1.06 APPLICABLE PERMITS AND LICENSES

A. The CONTRACTOR shall abide by all permit conditions, whether, general, specific, limited, or otherwise. A copy of all applicable permits and licenses, with the exception of City permits obtained by the CONTRACTOR, are attached hereto and made a part of the Contract Documents.

1.07 PUBLIC BID DISCLOSURE ACT 218.80 FS

A. All governmental agency permits or fees are to be disclosed, including, but not limited to, all license fees, permit fees, impact fees, or inspection fees, payable by the CONTRACTOR to the government agency that issued the contract documents or other governmental agency,

B. The following permits are required by the CONTRACTOR for this project: City of Fort Lauderdale Public Works and Engineering Department and City of Fort Lauderdale Building Department.

C. Should the CONTRACTOR determine dewatering is necessary for the means and methods of construction, it shall be the CONTRACTOR's responsibility to submit permit applications to SFWMD and BCEPGMD. A signed and sealed (by a State of Florida licensed engineer) dewatering application would be required. Given the close proximity of this project to a known contamination site, all groundwater monitoring and reporting, as required by the applicable permitting agencies, shall be the responsibility of the CONTRACTOR along with any associated costs.

D. The cost for obtaining these permits shall be accounted for in Permit Fee Allowance, Bid Item No. 4. Actual work required to comply with the dewatering and contamination requirements shall be accounted for in the Rehabilitation of Existing Sanitary Sewer Pump Station D-38, Bid Item No. 9.

PART 2 - PRODUCTS (NOT USED)

PART 3 - EXECUTION

3.01 PRE-CONSTRUCTION RESPONSIBILITIES

A. Upon receipt of the Notice to Proceed, the CONTRACTOR shall arrange for a Pre-Construction meeting. The meeting shall be held with a minimum of one weeks' notice and shall include the ENGINEER, the CITY, and Representatives for all affected utility companies.

3.02 TEMPORARY UTILITIES

A. The CONTRACTOR shall be responsible to arrange for and supply all temporary utilities including, but not limited to, water, sewer, and electricity.

B. The cost of temporary utilities shall be considered incidental to the cost of the WORK and is therefore included in the Bid.

3.03 UNDERGROUND LOCATING SERVICE

A. Prior to underground construction, the CONTRACTOR is required by the Underground Facility Damage Prevention and Safety Act, Chapter 556 FS to contact Sunshine 811, for the location of underground utilities.

3.04 HURRICANE PREPAREDNESS PLAN

A. Should the performance of the WORK occur during Hurricane Season, within thirty days of the date of Notice to Proceed, the CONTRACTOR shall submit to the ENGINEER and CITY a Hurricane Preparedness Plan. The plan should outline the necessary measures that the CONTRACTOR proposes to perform at no additional cost to the CITY in case of a hurricane warning. The plan shall detail these measures with specific action items defining responsible personnel.

3.05 INCLEMENT WEATHER

A. In the event of inclement weather, or whenever ENGINEER shall direct; CONTRACTOR will cause Subcontractors to protect carefully the WORK and materials against damage or injury from the weather. If, in the opinion of the ENGINEER, any portion of WORK or materials shall have been damaged or injured by reason of failure on the part of CONTRACTOR or any Subcontractor to so protect the WORK, such WORK and materials shall be removed and replaced at the expense of the CONTRACTOR.

3.06 PRESERVATION AND RESTORATION

A. CONTRACTOR shall be responsible for the preservation and protection of property adjacent to the WORK site against damage or injury as a result of his operations under this project. Any damage or injury occurring on account of any act, omission or neglect on the part of the CONTRACTOR shall be restored in a proper and satisfactory manner or replaced by and at the expense of the CONTRACTOR to an equal or superior condition than previously existed.

3.07 PROTECTION OF WORK AND MATERIAL

A. During the progress of the WORK and up to the date of final payment, the CONTRACTOR shall be solely responsible for the care and protection of all WORK and materials covered by the Contract.

B. All WORK and materials shall be protected against damage, injury or loss from any cause whatsoever, and the CONTRACTOR shall make good any such damage or loss at his own expense. Protection measures shall be subject to the approval of the CITY and ENGINEER.

3.08 CONTRACTOR USE OF PREMISES

A. CONTRACTOR shall have limited use of the premises for construction operations, including limited use of the site. The CONTRACTOR's use of the premises is further limited to the CITY's right to perform construction operations with its own forces or to employ separate Contractors on portions of the project.

B. The CONTRACTOR shall be responsible for coordinating his daily activities in conjunction with any Contractors presently working within the vicinity of this project.

C. Confine operations to areas within rights-of-way and easements.

D. The CONTRACTOR is expected to work regular hours between 8:00 A.M. to 5:00 P.M. Monday through Friday. Requests to work during other than regular hours that conform to the standard hours listed in the City Noise Ordinance Section 17-8 (1), must be submitted to the ENGINEER and CITY with the following information:

1. Cover page with Contractor name, project name, and location.
2. Description of work to be performed outside of normal work hours.
3. Site plan and location map.
4. Legal description.
5. Justification for work and why extended work hours are being requested.
6. Commencement date and duration of work.
7. List of Contractor's contacts, including those on site.
8. Details on type of equipment to be used during extended work hours.
9. Details on noise levels that may be produced by range of decibels, including current ambient levels at site and levels predicted from proposed construction impacts.
10. Details on vibratory control measures to be implemented.
11. Details on how neighbors in vicinity of work area will be notified.
12. Details on how complaints will be resolved and/or mitigated.
13. MOT Plans approved by the City Transportation and Mobility Department (TAM) and any other agencies (if applicable).

If no lane closure or traffic impacts are necessary, the request must be submitted seven (7) business days in advance of scheduled work. If the work requires lane closures, request should be submitted at least ten (10) business days in advance along with MOT plans approved by City Transportation and Mobility Department (TAM) and any other agencies if necessary to allow time for City Manager consideration and approval, City MOT permit issuance, and notification to the public.

Requests shall be reviewed by the ENGINEER and forwarded to the City Manager's Office. The CONTRACTOR will not permit overtime work or the performance of work on Saturday, Sunday or any legal holiday (designated by the City of Fort Lauderdale) without the City Manager's written consent at least seventy-two (72) hours in advance of the period proposed for such overtime work. Hours of work shall conform to the requirements of the CITY's Noise Ordinance. Requests to work outside regular hours that require a special exemption from the provisions of Section 17-7.4 shall follow the City's Department of Sustainable Development's process for "Requesting Exemption from the Noise Ordinance", located at:

https://www.fortlauderdale.gov/departments/sustainable-development/building-services/building-permit-general-info.

E. Keep existing driveways and entrances serving the premises clear and available to the CITY, Residents and the CITY's employees at all times.

1. Do not use these areas for parking or storage of materials.
2. Schedule deliveries to minimize space and time requirements for storage of materials and equipment on site.

3.09 ENVIRONMENTAL PROTECTION

A. Provide protection, operate temporary facilities, and conduct construction in ways and by methods that comply with environmental regulations, and minimize the possibility that air,

waterways, and subsoil might be contaminated or polluted, or that other undesirable effects might result.

3.10 ADJUSTMENT OF EXISTING UTILITIES

A. The CONTRACTOR shall raise or lower all manholes, valve boxes, etc. to finished grade. The cost of these adjustments shall be considered incidental to the cost of the WORK and is therefore included in the Bid.

3.11 EXISTING IRRIGATION

A. All existing irrigation systems within the area of the WORK shall be restored to original condition or better and adjusted to finished grade. The cost of repairs and/or adjustment to existing irrigation shall be covered in the Landscaping and Irrigation Allowance, Bid Item No.6.

3.12 DEMOLITION

A. Limits of demolition which may be shown in the Contract Documents are general in nature. Actual limits of demolition shall be as determined by the field conditions in conformance with the requirements of the WORK.

B. All sidewalks within the limits of construction which are not ADA compliant (cross-slopes which exceed 2% and/or running slopes which exceed 5% and/or changes in level of ¼" or greater) shall be demolished and reconstructed to meet these requirements.

C. When sidewalk tie-ins exist outside the limits of construction which are not ADA compliant, the CONTRACTOR shall replace those sections as directed by the CITY.

END OF SECTION

SECTION 01021 OWNER CONTINGENCY ALLOWANCES

PART 1 - GENERAL

1.01 DESCRIPTION

A. This Section provides for administrative procedures for the CONTRACTORs utilization of monetary amounts for Owner contingency allowances when contained in the Contract Price or Total Base Bid.

B. The CONTRACTOR has included in the Contract Price all allowances so named in the Contract Documents and shall cause the WORK so covered to be performed for such sums and by such persons or entities as may be acceptable to CITY and ENGINEER.

C. The CONTRACTOR agrees that a contingency allowance, if any, is for the sole use of CITY to cover unanticipated costs.

D. All Owner contingency allowances which remain unused, in whole or in part, remain the property of the CITY.

1.02 RELATED SECTIONS

A. Section 01012 – Measurement and Payment.

B. Section 01310 - Construction Schedules.

C. Section 01340 – Shop Drawings, Working Drawings and Samples

D. Other Sections as Applicable.

1.03 SCHEDULE OF ALLOWANCES

A. Permit Fee Allowance, $50,000.

B. Landscaping and Irrigation Allowance, $15,000.

C. FPL Allowance, $100,000

1.04 PROCEDURES FOR ADMINISTRATION OF ALLOWANCES.

A. Funds will only be drawn from Owner Contingency Allowances by prior approval from the CITY and ENGINEER.

1.05 COSTS INCLUDED IN ALLOWANCES

A. Refer to Section 01012 – Measurement and Payment

1.06 CONTRACTOR RESPONSIBILITIES

A. Promptly notify ENGINEER of any reasonable objections from supplier.

B. On notification of selection, execute purchase agreement with designated supplier.

C. Arrange for process shop drawings, product data, and samples.

D. Arrange for delivery. Promptly inspect products upon delivery for completeness, damage, and defects. Submit claims for transportation damage.

E. Install, adjust, and finish products.

F. Provide warranties for products and installation.

1.07 CORRELATION WITH CONTRACTOR SUBMITTALS

A. Schedule shop drawings, product data, samples, and delivery dates, in Progress Schedule for products selected under allowances.

PART 2 - PRODUCTS (NOT USED)

PART 3 - EXECUTION (NOT USED)

END OF SECTION

SECTION 01045 CUTTING AND PATCHING

PART 1 - GENERAL

1.01 DESCRIPTION

A. CONTRACTOR shall be responsible for all cutting, fitting and patching required to complete the WORK or to:

1. Make its several parts fit together properly.
2. Uncover portions of the WORK to provide for installation of ill-timed work.
3. Remove and replace defective work.
4. Remove and replace work not conforming to requirements of Contract Documents.
5. Remove samples of installed work as specified for testing.
6. Investigate subsurface conditions or utilities.

1.02 RELATED SECTIONS

A. Section 01010 - Summary of Work

B. Section 01015 – General Requirements

C. Section 01011 – Special Project Procedures

D. Other Sections as applicable.

1.03 SUBMITTALS

A. Submit a written request to the ENGINEER in advance of executing any cutting or alteration which affects:

1. WORK of the CITY or any separate contractor.
2. Structural value or integrity of any element of the Project.
3. Integrity or effectiveness of weather-exposed or moisture-resistant elements or systems.
4. Efficiency, operational life, maintenance, or safety of operational elements.
5. Visual qualities of sight-exposed elements.

B. Request shall include:

1. Identification of the Project.
2. Description of affected WORK.
3. The necessity for cutting, alteration, or excavation.
4. Effect on work of CITY or any separate contractor, or on structural or weatherproof integrity of Project.
5. Description of proposed work:
   a. Scope of cutting, patching, alteration, or excavation.
   b. Trades who will execute the work.
   c. Products proposed to be used.
   d. Extent of refinishing to be redone.
6. Alternatives to cutting and patching.
7. Cost proposal, when applicable.
8. Written permission of any separate contractor whose work will be affected.

C. Submit written notice to the ENGINEER designating the date and the time work will be uncovered.

PART 2 - PRODUCTS

2.01 MATERIALS

A. Comply with specifications and standards for each specific project involved.

PART 3 - EXECUTION

3.01 INSPECTION

A. Inspect existing conditions of Project, including elements subject to damage or to movement during cutting or patching.

B. After uncovering work, inspect conditions affecting installation of Products, or performance of work.

C. Report unsatisfactory or questionable conditions to the ENGINEER in writing; do not proceed with work until the ENGINEER has provided further instructions.

3.02 PREPARATION

A. Provide adequate temporary support as necessary to assure structural value or integrity of affected portion of WORK.

B. Provide devices and methods to protect other portions of Project from damage.

C. Provide protection from elements for that portion of the Project which may be exposed by cutting and patching work, and maintain excavations free from water.

3.03 PERFORMANCE

A. Execute cutting and demolition by methods which will prevent damage to other work, and will provide proper surfaces to receive installation of repairs.

B. Execute cutting methods which will prevent settlement or damage to other work.

C. Employ original Installer or Fabricator to perform cutting and patching for:

1. Weather-exposed or moisture-resistant surfaces.
2. Sight-exposed finished surfaces.

D. Execute fitting and adjustment of products to provide a finished installation to comply with specified products, functions, tolerances, and finishes.

E. Restore work which has been cut or removed; install new products to provide completed WORK in accord with requirements of Contract Documents.

F. Fit work airtight to pipes, sleeves, ducts, conduit and other penetrations through surfaces.

G. Refinish entire surfaces as necessary to provide an even finish to match adjacent finishes:

1. For continuous surfaces, refinish to nearest intersection.
2. For an assembly, refinish entire unit.

END OF SECTION

SECTION 01046 MODIFICATIONS TO EXISTING STRUCTURES, PIPING AND EQUIPMENT

PART 1 - GENERAL

1.01 DESCRIPTION

A. Furnish all labor, materials, equipment and incidentals required to modify, alter, and convert existing structures as shown or specified and as required for the installation of new mechanical equipment, piping, and appurtenances. Existing piping and equipment shall be removed, salvaged, abandoned, or dismantled as necessary for the performance of the WORK.

1.02 RELATED SECTIONS

A. Section 01011 – Special Project Procedures

B. Section 01310 – Construction Scheduling

C. Section 01045 – Cutting and Patching

D. Other Sections as applicable.

PART 2 - PRODUCTS (NOT USED)

PART 3 - EXECUTION

3.01 GENERAL

A. The CONTRACTOR shall cut, repair, reuse, excavate, demolish, or otherwise remove parts of the existing structures or appurtenances, as indicated on the DRAWINGS or specified herein or necessary for the performance of the WORK.

B. The above WORK shall include the cutting of grooves and chases in existing masonry to permit the proper bonding of new masonry to old, repainting of existing masonry, the drilling of holes into bolts, or other appurtenances, and the cutting of holes in masonry for the installation of pipe, conduits, and other appurtenances. The WORK shall include all necessary cutting and bending of reinforcing steel, structural steel, or miscellaneous metal work found embedded in the existing structures.

C. Blasting with explosives will not be permitted to complete any WORK under this Contract.

D. Care shall be taken not to damage any part of existing buildings, foundations, and exterior structures both below and above ground.

E. No existing structure, equipment, or appurtenance shall be shifted, cut, removed, or otherwise altered except with the express approval of and to the extent approved by the ENGINEER.

F. When removing materials or portions of existing structures and when making openings in walls and partitions, the CONTRACTOR shall take all precautions and use all necessary barriers and other protective devices so as not to damage the structures or contents by falling or flying debris and not to damage the structures from excavation or undermining of existing structural supports, beams, footings, columns or any structural member.

G. Materials and equipment removed in the course of making alterations and additions shall remain the property of the CITY, except that items not salvageable, as determined by the ENGINEER and the CITY shall become the property of the CONTRACTOR to be disposed of

by him off the site of the work at his own place of disposal. The CONTRACTOR shall assist the CITY in loading and hauling of salvageable materials within the CITY limits of the project.

H. All work of altering existing structures shall be done at such time and in such manner as will comply with the approved time schedule. So far as possible before any part of the work is started, all tools, equipment, and materials shall be assembled and made ready so that the work can be completed without delay.

I. All workmanship and new materials involved in constructing the alterations shall conform to the General Specifications for the classes of work insofar as such specifications are applicable.

J. All cutting of existing masonry or other material to provide suitable bonding to new work shall be done in a manner to meet the requirements of the respective section of these specifications covering the new work. When not covered, the work shall be carried on in the manner and to extent directed by the ENGINEER.

K. Where holes in existing masonry are required to be sealed, unless otherwise herein specified, they shall be sealed with cement mortar or concrete. The sides of the openings shall be provided with keyed joints and shall be suitably roughened to furnish a good bond and make a watertight joint. All loose or unsound material adjacent to the opening shall be removed and, if necessary, replaced with new material. The method of placing the mortar seal shall provide a suitable means of releasing entrapped air.

L. Surfaces of seals visible in the completed work shall be made to match as nearly as possible the adjacent surfaces.

M. Non-shrink grout shall be used for setting wall castings, sleeves, leveling pump bases, doweling anchors into existing concrete and elsewhere as shown.

N. Operating equipment shall be thoroughly cleaned and then lubricated and greased for protection during prolonged storage.

O. The CONTRACTOR shall provide flumes, hoses, piping, etc. to divert or provide suitable plugs, bulkheads or other means to hold back the flow of wastewater, water or other liquids, all as required in the performance of the work under this Contract.

3.02 SALVAGE

A. Any existing equipment or material, including but not limited to, motors, electrical components or controls, pipes, fittings, couplings, etc., which is removed or replaced as a result of construction under this project may be designated as salvage by the ENGINEER or CITY, and. if so, shall be removed or excavated, if necessary, and delivered to the CITY at a location directed by the CITY. Any equipment or material not worthy of salvaging, as directed by the CITY, shall be disposed of by the CONTRACTOR at a suitable location.

3.03 CONNECTING TO EXISTING PIPING AND EQUIPMENT

A. The CONTRACTOR shall verify exact location, material, alignment, joint, etc. of existing piping and equipment prior to making the connections called out in the DRAWINGS. The verifications shall be performed with adequate time to correct any potential alignment or other problems prior to the actual time of connection.

B. The CONTRACTOR shall dismantle and remove all existing equipment, piping and other appurtenances required, he shall cut existing pipelines for the purpose of making connections thereto. Anchor bolts for equipment and structural steel removed shall be cut

off one inch below the concrete surface. Surface shall be finished as specified in Division 3.

C. At the time that a new connection is made to an existing pipeline, additional new piping, extending to and including the most convenient new valve, shall be installed.

D. Where necessary or required for the purpose of making connections, the CONTRACTOR shall cut existing pipe lines in a manner to provide an approved joint. Where required, he shall weld beads, flanges or provide Dresser Couplings, all as specified and required.

END OF SECTION

SECTION 01050 FIELD ENGINEERING AND SURVEYING

PART 1 - GENERAL

1.01 DESCRIPTION

A. Provide and pay for field Engineering and surveying services required for Project as follows:

1. Surveying work required for the lay-out and execution of WORK.
2. Surveying work required to identify and maintain existing control points, bench marks, and property line corners.
3. Surveying work required to verify existing utility locations.
4. Surveying work as required to create Project Record Documents.
5. Civil, structural, or other professional Engineering services specified, or required to execute the CONTRACTOR's construction methods.
6. Testing, sampling, calibrating, and training services specified, or required to execute the CONTRACTOR's construction methods including soils, concrete, material, etc.

1.02 RELATED SECTIONS

A. Section 01410 – Materials and Installation Testing

B. Section 01720 - Project Record Documents

C. Other Sections as applicable.

1.03 QUALIFICATIONS OF PROFESSIONAL

A. Florida Registered Professional Surveyor and Mapper, acceptable to the CITY and the ENGINEER.

B. Florida Registered Professional Engineer(s) of the specialty required for the Project, acceptable to the CITY and the ENGINEER.

1.04 SURVEY REFERENCE POINTS

A. Horizontal and vertical control points for the Project are to be established by the ENGINEER and provided to the CONTRACTOR.

B. Locate and protect control points prior to starting work, and preserve all permanent reference points during construction.

1. Make no changes or relocations without prior written notice to the ENGINEER.
2. Report to the ENGINEER when any reference point is lost or destroyed, or requires relocation because of necessary changes in grades or locations.
3. Require surveyor to replace project control points which may be lost or destroyed.
   a. Establish replacements based on original survey control.

1.05 PROJECT SURVEY REQUIREMENTS

A. Establish a minimum of two temporary bench marks on site, referenced to data by survey control points.

1. Record locations, with horizontal and vertical data, on Project Record Documents.

B. Establish lines and levels, locate, and lay out, by instrumentation and similar appropriate means:

1. Site Improvements
   a. Line and grade of pipe and structure installation; top of pipe, invert, slope, etc.
   b. Grading for fill and topsoil placement, roadway sub-base and base installation.
2. Controlling lines and levels required for all trades.

C. From time to time, verify layouts by same methods.

1.06 RECORDS

A. Maintain a complete, accurate log of all control and survey work as it progresses in accordance with Section 01720.

1.07 SUBMITTALS

A. Submit name and address of Professional Surveyor and Mapper or Professional Engineer to the ENGINEER.

B. On request of the ENGINEER, submit documentation to verify accuracy of field engineering work.

C. Submit certificate signed by registered surveyor certifying that elevations and locations of improvements are in conformance, or non-conformance, with Contract Documents.

D. Submit Project Record Documents in accordance with Section 01720.

PART 2 - PRODUCTS (NOT USED)

PART 3 - EXECUTION (NOT USED)

END OF SECTION

SECTION 01090 REFERENCES

PART 1 - GENERAL

1.01 DESCRIPTION

A. Applicable Publications: Whenever in these specifications references are made to published specifications, codes, standards, or other requirements, it shall be understood that wherever no date is specified, only the latest specifications, standards, or requirements of the respective issuing agencies which have been published as of the date that the WORK is advertised for bids, shall apply; except to the extent that said standards or requirements may be in conflict with applicable laws, ordinances, or governing codes. No requirements set forth herein or shown on the DRAWINGS shall be waived because of any provision of, or omission from, said standards or requirements.

B. Specialists, Assignments: In certain instances, specification text requires (or implies) that specific work is to be assigned to specialists or expert entities, who must be engaged for the performance of that work. Such assignments shall be recognized as special requirements over which the CONTRACTOR has no choice or option. These assignments shall not be interpreted so as to conflict with the enforcement of building codes and similar regulations governing the WORK; also they are not intended to interfere with local union jurisdiction settlements and similar conventions. Such assignments are intended to establish which party or entity involved in a specific unit of work is recognized as "expert" for the indicated construction processes or operations. The final responsibility for fulfillment of the entire set of contract requirements remains with the CONTRACTOR.

1.02 REFERENCE SPECIFICATIONS, CODES, AND STANDARDS

A. Without limiting the generality of other requirements of the specifications, all work specified herein shall conform to or exceed the requirements of the following documents to the extent that the provisions of such documents are not in conflict with the requirements of these Specifications nor the applicable codes.

B. References herein to "Building Code" or “Code” shall mean the Florida Building Code. The latest edition of the code as approved and used at the local agency having jurisdiction, shall apply to the WORK herein, including, all addenda, modifications, amendments, or other lawful changes thereto.

C. In case of conflicts between codes, reference standards, drawings and other Contract Documents, the most stringent requirements shall govern. All conflicts shall be brought to the attention of the ENGINEER for clarifications and directions prior to ordering or providing any materials or labor. The CONTRACTOR shall bid the most stringent requirements.

D. Applicable Standards: The CONTRACTOR shall construct all WORK in accordance with the requirements of the Contract Documents, building codes, and referenced standards specified herein.

E. References herein to "OSHA Regulations for Construction" shall mean Title 29, Part 1926, Construction Safety and Health Regulations, Code of Federal Regulations, including all changes and amendments thereto.

F. References herein to "OSHA Standards" shall mean Title 29, Part 1910, Occupational Safety and Health Standards, Code of Federal Regulations (OSHA), including all changes and amendments thereto.

1.03 ABBREVIATION

A. Wherever in these specifications references are made to the standards, specifications, or other published data of the various national, regional, or local organizations, such organizations may be referred to by their acronyms or abbreviation only. As a guide to the user of these specifications, the following acronyms and abbreviations which may appear in these specifications shall have the meanings indicated herein.

1.04 ABBREVIATIONS AND ACRONYMS

A. Abbreviations and acronyms contained in the Contract Documents may include, but not be limited to, the following:

AAMA	Architectural Aluminum Manufacturer's Association
AAR	Association of American Railroads
AASHTO	American Association of the State Highway and Transportation Officials
AATCC	American Association of Textile Chemists and Colorists
ACI	American Concrete Institute
ACPA	American Concrete Pipe Association
ACPPA	American Concrete Pressure Pipe Association
AFBMA	Anti-Friction Bearing Manufacturer's Association, Inc.
AGA	American Gas Association
AGC	Associated General Contractors
AGMA	American Gear Manufacturer's Association
AHAM	Association of Home Appliance Manufacturers
AI	The Asphalt Institute
AIA	American Institute of Architects
AISC	American Institute of Steel Construction
AISI	American Iron and Steel Institute
AITC	American Institute of Timber Construction
AMCA	Air Movement and Control Association
ANS	American Nuclear Society
ANSI	American National Standards Institute, Inc.
APA	American Plywood Association
API	American Petroleum Institute
APWA	American Public Works Association
AREA	American Railway Engineering Association
ASA	Acoustical Society of America
ASAE	American Society of Agricultural Engineers
ASCE	American Society of Civil Engineers

ASHRAE	American Society of Heating, Refrigerating, and Air-Conditioning Engineers
ASLE	American Society of Lubricating Engineers
ASME	American Society of Mechanical Engineers
ASPE	American Society of Plumbing Engineers
ASQC	American Society for Quality Control
ASSE	American Society of Sanitary Engineers
ASTM	American Society for Testing and Materials
AWPA	American Wood Preservers Association
AWPI	American Wood Preservers Institute
AWS	American Welding Society
AWWA	American Water Works Association
BBC	Basic Building Code, Building Officials, and Code Administrators International
BCEPGMD	Broward County Environmental Protection and Growth Management Department
BHMA	Builders Hardware Manufacturers Association
CBM	Certified Ballast Manufacturers
CEMA	Conveyors Equipment Manufacturers Association
CGA	Compressed Gas Association
CLPCA	California Lathing and Plastering Contractors Association
CLFMI	Chain Link Fence Manufacturers Institute
CMA	Concrete Masonry Association
CRSI	Concrete Reinforcing Steel Institute
CSI	Construction Specifications Institute
DCDMA	Diamond Core Drill Manufacturers Association
DIPRA	Ductile Iron Pipe Research Association
EIA	Electronic Industries Association
ETL	Electrical Test Laboratories
FDEP	Florida Department of Environmental Protection
HI	Hydraulic Institute
ICBO	International Conference of Building Officials
IEEE	Institute of Electrical and Electronic Engineers
IES	Illuminating Engineering Society
IME	Institute of Makers of Explosives
IP	Institute of Petroleum (London)

IPC	Institute of Printed Circuits
IPCEA	Insulated Power Cable Engineers Association
ISA	Instrument Society of America
ISO	International Organization for Standardization
ITE	Institute of Traffic Engineers
MBMA	Metal Building Manufacturers Association
MPTA	Mechanical Power Transmission Association
MTI	Marine Testing Institute
NAAM	National Association of Architectural Metal Manufacturers
NACE	National Association of Corrosion Engineers
NBS	National Bureau of Standards
NCCLS	National Committee for Clinical Laboratory Standards
NEC	National Electric Code
NEMA	National Electrical Manufacturers Association
NFPA	National Fire Protection Association
NFPA	National Forest Products Association
NGLI	National Grease Lubricating Institute
NMA	National Microfilm Association
NRCA	National Roofing Contractors Association
NWMA	National Woodwork Manufacturers Association
NWWA	National Water Well Association
OSHA	Occupational Safety and Health Administration
PCA	Portland Cement Association
PCI	Precast Concrete Institute
PDI	Plumbing and Drainage Institute
RIS	Redwood Inspection Service
RVIA	Recreational Vehicle Industry Association
RWMA	Resistance Welder Manufacturers Association
SAE	Society of Automotive Engineers
SAMA	Scientific Apparatus Makers Association
SBC	Southern Building Code Congress International, Inc. (SBCCI)
SIS	Swedish Standards Association
SJI	Steel Joist Institute
SMA	Screen Manufacturers Association

SPR	Simplified Practice Recommendation
SSBC	Southern Standard Building Code, Southern Building Code Congress
SSPC	Steel Structures Painting Council
SSPWC	Standard Specifications for Public Works Construction
TAPPI	Technical Association of the Pulp and Paper Industry
TFI	The Fertilizer Institute
UBC	Uniform Building Code
UL	Underwriters Laboratories, Inc.
USGS	United States Geological Survey
WCLIB	West Coast Lumber Inspection Bureau
WCRSI	Western Concrete Reinforcing Steel Institute
WIC	Woodwork Institute of California
WPCF	Water Pollution Control Federation
WRI	Wire Reinforcement Institute, Inc.
WWPA	Western Wood Products Association

PART 2 - PRODUCTS (NOT USED)

PART 3 - EXECUTION (NOT USED)

END OF SECTION

SECTION 01112 PERMITS

PART 1 - GENERAL

1.01 SCOPE

A. Any applicable engineering permits have been obtained from the Agencies listed below by the CITY. The CONTRACTOR is responsible for compliance with any and all permit conditions. In the event that the CITY must obtain permits in addition to those listed below, the CONTRACTOR shall not have any claim for damages arising from any delay caused by the CITY'S obtaining said additional permits.

1. Broward County Environmental Protection and Growth Management Department
   a. Wastewater License
2. Florida Department of Environmental Protection
   a. Domestic Wastewater Collection/Transmission System

B. The CONTRACTOR shall obtain a Construction/Building and Landscape Permit from the City of Fort Lauderdale.

C. It shall be the CONTRACTOR's responsibility to secure all permits required to initiate and complete the work under this contract. Two copies of all permit applications, including supporting documentation, shall be provided to the CITY. Four copies of approved permits, issued by the approving agency, shall be provided to the CITY. These permits may include, but are not limited to: construction permits from the City of Fort Lauderdale, Broward County Environmental Protection and Growth Management Department (BCEPGMD), Broward County Traffic Engineering Division, as needed.

D. CONTRACTOR shall obtain dewatering permit if dewatering required.

E. The CONTRACTOR shall prepare, submit, implement & maintain necessary documents to comply with the National Pollution Discharge Elimination System permit program, including all permit fees. These documents include but are not limited to, Notice of Intent, Stormwater Pollution Prevention Plans, Notice of Termination, etc., in accordance with the requirements of Florida Department of Environmental Protection.

F. The CONTRACTOR shall have responsibility for acquiring and adhering to the requirements of any other permit required to complete the work for this project. The following list should be considered only as a preliminary guideline:

1. All necessary permits required for traffic control and Maintenance of Traffic.
2. All necessary permits for disposal of excavated material pipe installations.

PART 2 - PRODUCTS (NOT USED)

PART 3 - EXECUTION (NOT USED)

END OF SECTION

SECTION 01200 PROJECT MEETINGS

PART 1 - GENERAL

1.01 DESCRIPTION

A. The CONTRACTOR shall schedule and administer preconstruction meetings, periodic progress meetings, and specially called meetings throughout the progress of work. The CONTRACTOR shall:

1. Prepare agenda for meetings.
2. Make physical arrangements for meetings.
3. Preside at meetings.
4. Record in writing the minutes; include significant proceedings and decisions and submit to ENGINEER for approval prior to distribution.
5. Record the meeting with an audio recording device.
6. Reproduce and distribute copies of minutes within five working days after each meeting:
   a. To participants in the meeting.
   b. To parties affected by decisions made at the meeting.

B. Representatives of CONTRACTOR, subcontractors, and suppliers attending meetings shall be qualified and authorized to act on behalf of the entity each represents.

C. The CONTRACTOR shall attend meetings to assure that work is executed consistent with Contract Documents and construction schedules.

1.02 RELATED SECTIONS

A. Section 01310 - Construction Schedules.

B. Section 01340 - Shop Drawings, Working Drawings, and Samples.

C. Section 01720 - Project Record Documents.

D. Other Sections as applicable.

1.03 PRECONSTRUCTION MEETING

A. Schedule a preconstruction meeting no later than 15 days after date of Notice to Proceed.

B. Location: A central site, convenient for all parties designated by the CITY.

C. Attendance:

1. CITY's Representative.
2. ENGINEER and his Professional Consultants.
3. Resident Project Representative.
4. CONTRACTOR's Superintendent.
5. Major Subcontractors.
6. Major Suppliers.
7. Utilities.
8. Others as appropriate.

D. Suggested Agenda:

1. Distribution and discussion of:
   a. List of major subcontractors and suppliers.

b. Projected Construction Schedule.
2. Critical work sequencing/critical path scheduling.
3. Major equipment deliveries and priorities.
4. Project Coordination.
   a. Designation of responsible personnel.
5. Procedures and processing of:
   a. Field decisions.
   b. Proposal requests.
   c. Submittals.
   d. Change Orders.
   e. Applications for Payments.
6. Adequacy of Distribution of Contract Documents.
7. Procedures for maintaining Record Documents.
8. Use of Premises:
   a. Office, Work and Storage Areas.
   b. CITY's Requirements.
9. Construction facilities, controls, and construction aids.
10. Temporary Utilities.

1.04 PROGRESS MEETINGS

A. Schedule regular periodic meetings.

1. The progress meetings will be held on a monthly basis.

B. Hold called meetings as required by progress of the work.

C. Location of the meetings: Project field office of the CONTRACTOR or ENGINEER.

D. Attendance:

1. ENGINEER and his professional consultants as needed.
2. Subcontractors as appropriate to the agenda.
3. Suppliers as appropriate to the agenda.
4. Others as appropriate.

E. Suggested Agenda:

1. Review, approval of minutes of previous meeting.
2. Review of work progress since previous meeting.
3. Field observations, problems, and conflicts.
4. Problems which impede Construction Schedule.
5. Review of offsite fabrication, delivery schedule.
6. Corrective measures and procedures to regain projected schedule.
7. Revisions to Construction Schedule.
8. Progress, schedule, during succeeding work period.
9. Coordination of schedules.
10. Review submittal schedules; expedite as required.
11. Maintenance of quality standards.
12. Pending changes and substitutions.
13. Review proposed changes for:
    a. Effect on Construction Schedule and on a completion date.
    b. Effect on other contracts of the Project.
14. Other business.
15. Construction schedule.

16. Critical/long lead items.

F. The CONTRACTOR is to attend progress meetings and is to study previous meeting minutes and current agenda items, in order to be prepared to discuss pertinent topics such as deliveries of materials and equipment, progress of work, etc.

G. The CONTRACTOR is to provide a current submittal log at each progress meeting in accordance with Section 01340.

PART 2 - PRODUCTS (NOT USED)

PART 3 - EXECUTION (NOT USED)

END OF SECTION

SECTION 01310 CONSTRUCTION SCHEDULES

PART 1 - GENERAL

1.01 DESCRIPTION

A. Promptly after Award of the Contract and within ten days after the effective date of the Agreement, prepare and submit to the ENGINEER an estimated construction progress schedules for the work, with sub-schedules of related activities which are essential to its progress.

B. Submit revised progress schedules on a monthly basis.

C. No partial payments shall be approved by the ENGINEER until there is an approved up to date construction progress schedule on hand.

D. The CONTRACTOR shall designate an authorized representative of his firm who shall be responsible for development and maintenance of the schedule and of progress and payment reports. This representative of the CONTRACTOR shall have direct project control and complete authority to act on behalf of the CONTRACTOR's schedule.

1.02 RELATED SECTIONS

A. Section 01010 - Summary of Work

B. Section 01200 - Project Meetings

C. Section 01340 - Shop Drawings, Working Drawings and Samples

D. Other Sections as applicable.

1.03 FORM OF SCHEDULES

A. Prepare schedules for submittal each month with pay request. The form of the schedule is to be Microsoft Project or approved equal. The Schedule is to indicate work completed to date and additions to or deletions from the schedule.

1. Provide separate horizontal bar for each trade or operation within each structure or item.
2. Horizontal time scale: In weeks from start of construction and identify the first work day of each month.
3. Scale and spacing: To allow space for notations and future revisions.

B. Format of listings: The chronological order of the start of each item of work for each structure.

C. Identification of listings: By major specification section numbers as applicable and structure.

1.04 CONTENT OF SCHEDULES

A. Construction Progress Schedule:

1. Show the complete sequence of construction by activity broken down by project phase.
2. Show the dates for the beginning of, and completion of, each major element of construction in no more than a two-week increment scale. Specifically list, but not limited to:
   a. Receiving Materials

b. Pipeline Installations
c. Testing
d. Restoration
e. Startup
f. Record Drawings
g. Permit Close-out
h. Punch List
i. CITY Activities, Including Inspections

3. Show projected percentage of completion for each item, as of the first of each month.
4. Show projected dollar cash flow requirements for each month of construction.
5. Use of float suppression techniques such as preferential sequencing or logic, special lead/lag logic restraints, and extended activity times are prohibited and use of float time disclosed or implied by use of alternate float- suppression techniques shall be shared to proportionate benefit of the CITY and CONTRACTOR.
6. Pursuant to above float-sharing requirement, no time extensions will be granted nor delay damages paid until a delay occurs which (i) impacts Project's critical path, (ii) consumes available float or contingency time, and (iii) extends work beyond contract completion date.
7. If the CONTRACTOR provides an accepted schedule with an early completion date, the CITY reserves the right to reduce the duration of the work to match the early completion date by issuing a deductive Change Order at no change in Contract Price.

B. Submittal Schedule for Shop Drawings and Samples in accordance with Section 01340. Must show:

1. The dates for CONTRACTOR's submittals.
2. The date's submittals will be required for owner furnished products, if applicable.
3. The dates approved submittals will be required from the ENGINEER.

C. A list of all long lead items (equipment, materials, etc.).

1.05 PROGRESS REVISIONS

A. Indicate progress of each activity to date of submission.

B. Show changes occurring since previous submission of schedule:

1. Major changes in scope.
2. Activities modified since previous submission.
3. Revised projections of progress and completion.
4. Other identifiable changes.

C. Provide a narrative report as needed to define:

1. Problem areas, anticipated delays, and the impact on the schedule.
2. Corrective action recommended, and its effect.
3. The effect of changes on schedules of other prime contractors.

1.06 SUBMISSIONS

A. Submit initial schedules to the ENGINEER within 10 days after the effective date of the Agreement.

1. The ENGINEER will review schedules and return review copy within 21 days after receipt.
2. If required, resubmit within 7 days after return of review copy.

B. Submit a minimum of five (5) copies of revised monthly progress schedules with that month's application for payment.

1.07 DISTRIBUTION

A. Distribute copies of reviewed schedules to:

1. CITY (Two copies)
2. ENGINEER (Two copies)
3. Job Site File (One copy)
4. Subcontractors (As needed)
5. Other Concerned Parties (As needed)

B. Instruct recipients to report promptly to the CONTRACTOR, in writing, any problems anticipated by the projections shown in the schedule.

PART 2 - PRODUCTS (NOT USED)

PART 3 - EXECUTION (NOT USED)

END OF SECTION

SECTION 01340 SHOP DRAWINGS, WORKING DRAWINGS AND SAMPLES

PART 1 - GENERAL

1.01 DESCRIPTION

A. The contractor shall submit to the ENGINEER for review, such working drawings, shop drawings, test reports and data on materials and equipment (hereinafter in this article called data), and material samples (hereinafter in this article called samples) as are required for the proper control of work, including but not limited to those working drawings, shop drawings, data and samples for materials and equipment specified elsewhere in the Specifications and in the Contract Drawings.

B. The CONTRACTOR shall submit electronic copies as well as three (3) hard copies of shop drawings or other data to the ENGINEER.

C. Within thirty (30) calendar days after the effective date of the Agreement, the CONTRACTOR shall submit to the ENGINEER a complete list of preliminary data for which Shop Drawings are to be submitted. Included in this list shall be the names of all proposed manufacturers furnishing specific items. Review of this list by the ENGINEER shall in no way expressed or implied relieve the CONTRACTOR from submitting complete Shop Drawings and providing materials, equipment, etc., fully in accordance with the Specifications. This procedure is required in order to expedite final review of Shop Drawings.

D. The CONTRACTOR is to maintain an accurate updated submittal log and will bring this log to each scheduled progress meeting with the CITY and ENGINEER. This log should include the following items:

1. Submittal-Description and Number assigned.
2. Date to ENGINEER.
3. Date returned to CONTRACTOR (from ENGINEER).
4. Status of Submittal (Approved/Resubmit/Rejected).
5. Date of Resubmittal and Return (as applicable).
6. Date material released (for fabrication).
7. Projected date of fabrication.
8. Projected date of delivery to site.
9. Status of O & M submittal.

1.02 RELATED SECTIONS

A. Section 01310 - Construction Schedules

B. Section 01720 - Project Record Documents

C. Section 01730 - Operating and Maintenance Data

D. Other Sections as applicable.

1.03 CONTRACTOR'S RESPONSIBILITY

A. It is the duty of the CONTRACTOR to check all drawings, data, and samples prepared by or for him before submitting them to the ENGINEER for review. Each and every copy of the Drawings and data shall bear CONTRACTOR's stamp will be returned to the CONTRACTOR for conformance with this requirement. Shop drawings shall indicate any deviations in the submittal from requirements of the Contract Documents.

B. Determine and verify:

1. Field measurements
2. Field construction criteria
3. Catalog numbers and similar data
4. Conformance and Specifications

C. The CONTRACTOR shall furnish the ENGINEER a schedule of Shop Drawing submittals fixing the respective dates for the submission of shop and working drawings, the beginning of manufacture, testing, and installation of materials, supplies, and equipment. This schedule shall indicate those that are critical to the progress schedule.

D. Designate in the construction schedule, or in a separate coordinated schedule, the dates for submission and the dates that reviewed Shop Drawings, Working Drawings and Samples will be needed.

E. The CONTRACTOR shall not begin any of the work covered by a drawing, data, or a sample returned for correction until a revision or correction thereof has been reviewed and returned to him, approved by the ENGINEER.

F. The CONTRACTOR shall submit to the ENGINEER all shop drawings, working drawings and samples sufficiently in advance of construction requirements and shall account for ENGINEERs Shop Drawing review time accordingly.

G. The CONTRACTOR shall submit two (2) copies of descriptive or product data submittals to complement shop drawings for the ENGINEER plus the number of copies which the CONTRACTOR requires. The ENGINEER will retain two (2) sets. All blueprint shop drawings shall be submitted with one (1) set of reproducible and four (4) sets of print. The ENGINEER will review the drawings and return to the CONTRACTOR the set of marked-up drawings with appropriate review comments.

H. The CONTRACTOR shall be responsible for and bear all cost of damages which may result from the ordering of any material or from proceeding with any part of work prior to the review and Approval by ENGINEER of the necessary Shop Drawings.

1.04 ENGINEER'S REVIEW OF SHOP DRAWINGS

A. The ENGINEER's review of drawings, data and samples submitted by the CONTRACTOR will cover only general conformity to the Specifications, external connections, and dimensions which affect the installation. The ENGINEER's review and exception if any, will not constitute an approval of dimensions, quantities, and details of the material, equipment, device, or item shown.

B. The review of drawings and schedules will be general, and shall not be construed:

1. as permitting any departure from the Contract requirements;
2. as relieving the CONTRACTOR of responsibility for any errors, including details, dimensions, and materials;
3. as approving departures from details furnished by the ENGINEER, except as otherwise provided herein.

C. If the drawings or schedule as submitted describe variations and/or show a departure from the Contract requirements which ENGINEERs finds to be in the interest of the CITY and to be minor as not to involve a change in the Contract Price or time for performance, the ENGINEER may return the reviewed drawings without noting an exception.

D. When reviewed by the ENGINEER, each of the Shop Drawings will be identified as having received such review being so stamped and dated. Shop Drawings stamped "REJECTED" and with required corrections shown will be returned to the CONTRACTOR for correction and resubmittal.

E. Resubmittals will be handled in the same manner as the first submittals. On resubmittals, the CONTRACTOR shall direct specific attention, in writing or on resubmitted Shop Drawings, to revisions other than the corrections requested by the ENGINEER on previous submissions. The CONTRACTOR shall make any corrections required by the ENGINEER.

F. If the CONTRACTOR considers any correction indicated on the drawings to constitute a change to the Contract Drawings or Specifications, the CONTRACTOR shall give written notice thereof to the ENGINEER.

G. The ENGINEER will review one submittal and one re-submittal after which cost of review will be borne by the CONTRACTOR. The cost of engineering shall be equal to the ENGINEER's charges to the CITY under the terms of the ENGINEER's agreement with the CITY.

H. When the Shop Drawings have been completed to the satisfaction of the ENGINEER, the CONTRACTOR shall carry out the construction in accordance therewith and shall make no further changes therein except upon written instructions from the ENGINEER.

I. No partial submittals will be reviewed. Submittals not complete will be returned to the CONTRACTOR, and will not be considered "Rejected" until resubmitted.

J. The ENGINEER shall return Shop Drawing submittals to the CONTRACTOR within twenty-one (21) days calendar days from the date the ENGINEER receives them.

1.05 SHOP DRAWINGS

A. When used in the Contract Documents, the term "Shop Drawings" shall be considered to mean CONTRACTOR's plans for material and equipment which become an integral part of the Project. These drawings shall be complete and detailed. Shop Drawings shall consist of fabrication, erection and setting drawings and schedule drawings, manufacturer's scale drawings, and wiring and control diagrams. Cuts, catalogs, pamphlets, descriptive literature, and performance and test data, shall be considered only as supportive to required Shop Drawings as defined above.

B. Drawings and schedules shall be checked and coordinated with work of all trades involved, before they are submitted for review by the ENGINEER and shall bear the CONTRACTOR's stamp of approval as evidence of such checking and coordination. Drawings or schedules submitted without this stamp of approval shall be returned to the CONTRACTOR for resubmission.

C. Each Shop Drawing, shall have a blank area 3 1/2 inches by 3 1/2 inches, located adjacent to the title block. The title block shall display the following:

1. Number and title of the drawing.
2. Date of drawing or revision.
3. Name of project building or facility.
4. Name of CONTRACTOR and subcontractor submitting drawing.
5. Clear identification of contents and location of work.
6. Specification title and number.

D. If drawings show variations from Contract requirements because of standard shop practice

or for other reasons, the CONTRACTOR shall describe such variations in his letter of transmittal. If acceptable, proper adjustment in the Contract shall be implemented where appropriate. If the CONTRACTOR fails to describe such variations he shall not be relieved of the responsibility for executing the work in accordance with the Contract, even though such drawings have been reviewed.

E. Data on materials and equipment include, without limitation, materials and equipment lists, catalog data sheets, cuts, performance curves, diagrams, materials of construction and similar descriptive material. Materials and equipment lists shall give, for each item thereon, the name and location of the supplier or manufacturer, trade name, catalog reference, size, finish, and all other pertinent data.

F. For all mechanical and electrical equipment furnished, the CONTRACTOR shall provide a list including the equipment name, address and telephone number of the manufacturer's representative and service company so that service and spare parts can be readily obtained. In addition, a maintenance and lubrication schedule for each piece of equipment shall be submitted along with each shop drawing submittal.

G. All manufacturers or equipment supplier who proposes to furnish equipment or products under Divisions 11, 12, 13, 14, 15 and 16 shall submit an installation list to the ENGINEER along with the required shop drawings. The installation list shall include at least five installations where identical equipment has been installed and has been in operation for a period of at least five (5) years.

H. Only the ENGINEER will utilize the color "red" in marking Shop Drawing submittals.

I. Before final payment is made, the CONTRACTOR shall furnish to ENGINEER two (2) sets of record shop drawings all clearly revised, complete and up to date showing the permanent construction as actually made for all reinforcing and structural steel, miscellaneous metals, process and mechanical equipment, piping, electrical system and instrumentation system.

1.06 WORKING DRAWINGS

A. When used in the Contract Documents, the term "working drawings" shall be considered to mean the CONTRACTOR's plans for temporary structures such as temporary bulkheads, support of open cut excavation, support of utilities, ground water control systems, forming and false-work; for underpinning; and for such other work as may be required for construction, but does not become an integral part of the project.

B. Copies of working drawings as noted in subparagraph 1.06A above, shall be submitted to the ENGINEER where required by the Contract Documents or requested by the ENGINEER, and shall be submitted at least thirty (30) calendar days (unless otherwise specified by the ENGINEER) in advance of their being required for work.

C. Working drawings shall be signed by a Registered Professional Engineer, currently licensed to practice in the State of Florida and shall convey, or be accompanied by, calculation or other sufficient information to completely explain the structure, machine, or system described and its intended manner of use. Prior to commencing such work, working drawings must have been reviewed without specific exceptions by the ENGINEER, which review will be for general conformance and will not relieve the Contractor in any way from his responsibility with regard to the fulfillment of the terms of the Contract. The Contractor assumes all risks of error; the CITY and ENGINEER shall have no responsibility therefore.

1.07 SAMPLES

A. The Contractor shall furnish, for the approval of the ENGINEER, samples required by the

Contract Documents or requested by the ENGINEER. Samples shall be delivered to the ENGINEER as specified or directed. The Contractor shall prepay all shipping charges on samples. Materials or equipment for which samples are required shall not be used in work until approved by the ENGINEER.

B. Samples shall be of sufficient size and quantity to clearly illustrate:

1. Functional characteristics of the product, with integrally related parts and attachment devices.
2. Full range of color, texture, and pattern.
3. A minimum of two samples of each item shall be submitted.

C. Each sample shall have a label indicating

1. Name of Project
2. Name of Contractor and Subcontractor
3. Material or Equipment Represented
4. Place of Origin
5. Name of Producer and Brand (if any)
6. Location in Project

(Samples of finished materials shall have additional marking that will identify them under the finished schedules.)

D. The Contractor shall prepare a transmittal letter in triplicate for each shipment of samples containing the information required in subparagraph 1.07B above. He shall enclose a copy of this letter with the shipment and send a copy of this letter to the ENGINEER. Approval of a sample shall be only for the characteristics or use named in such approval and shall not be construed to change or modify any Contract requirements.

E. Approved samples not destroyed in testing shall be sent to the ENGINEER or stored at the site of the work. Approved samples of the hardware in good condition will be marked for identification and may be used in the work. Materials and equipment incorporated in work shall match the approved samples. Samples which failed testing or were not approved will be returned to the Contractor at his expense, if so requested at time of submission.

PART 2 - PRODUCTS (NOT USED)

PART 3 - EXECUTION (NOT USED)

END OF SECTION

SECTION 01370 SCHEDULE OF VALUES

PART 1 - GENERAL

1.01 DESCRIPTION

A. Submit to the ENGINEER a Schedule of Values allocated to the various portions of the WORK, within 10 days after the effective date of the Agreement.

B. Upon request of the ENGINEER, support the values with data which will substantiate their correctness.

C. Once approved, the Schedule of Values shall be used as the basis for the CONTRACTOR's Applications for Payment.

1.02 RELATED SECTIONS

A. Other Sections as applicable.

1.03 FORM AND CONTENT OF SCHEDULE OF VALUES

A. Present schedule on an 8-1/2 inch x 11 inch white paper; CONTRACTOR's standard forms and automated printout will be considered for approval by the ENGINEER upon CONTRACTOR's request. Identify schedule with:

1. Title of Project and location
2. Engineer and Project number
3. Name and Address of Contractor
4. Contract designation
5. Date of submission

B. Schedule shall list the installed value of the component parts to include individual equipment, piping, electrical, paving, of the WORK (as required) in sufficient detail to serve as a basis for computing values for progress payments during construction and for additions and deletions to the WORK.

C. For the various portions of the WORK:

1. Each item shall include a directly proportional amount of the CONTRACTOR's overhead and profit.

D. The sum of all values listed in the schedule shall equal the total Contract Sum.

E. Schedules are subject to ENGINEER's approval wherein additional line item detail may be required.

PART 2 - PRODUCTS (NOT USED)

PART 3 - PRODUCTS (NOT USED)

END OF SECTION

SECTION 01380 CONSTRUCTION PHOTOGRAPHS

PART 1 - GENERAL

1.01 DESCRIPTION

A. The CONTRACTOR shall employ a professional photographer to take digital construction record photographs for pre-construction conditions periodically during course of WORK and post-construction.

1.02 RELATED SECTIONS

A. Section 01012 – Measurement and Payment

B. Section 01720 - Project Record Documents

C. Other Sections as applicable.

1.03 PHOTOGRAPHY REQUIRED

A. View and Quantities Required:

1. Take a minimum of 24 images of the site and adjacent property at the following intervals:
   a. Pre-construction
   b. Monthly or other interval, at the cut-off date in accordance with Applications for Payment.
   c. At construction events or discoveries as directed by the CITY or ENGINEER.
   d. At post-construction.

B. Aerial photography shall be required in addition to ground level images for items out of sight of ground level photography.

C. Photograph from locations to adequately illustrate condition of construction and state of progress.

D. At successive periods of photography, take at least one photograph from the same overall view as previously.

E. Consult with the CITY and ENGINEER at each period of photography for instructions concerning views required.

PART 2 - PRODUCTS

2.01 CAMERA REQUIREMENT

A. A Digital Single Lens Reflex (DLSR) is required.

B. Point and shoot, mobile phones and disposal cameras are not acceptable.

2.02 PHOTOGRAPHS

A. The minimum file size is 6.0 megapixels per image.

B. All images shall be color and in RGB format.

C. Acceptable file formats include:

1. Tagged Information File Format (TIFF)
2. Joint Photographic Experts Group 2000 (JPEG2000)

3. Digital Negative (DGN)

D. Unacceptable file formats include:

1. Bitmap (BMP)
2. Graphics Interchange Format (GIFF)
3. Portable Network Graphic (PNG)
4. RAW format.

2.03 METADATA

A. Each image must contain descriptive metadata as follows:

a. Name of Project
b. Orientation of View
c. Date and time of image
d. Name and address of photographer
e. Photographer's numbered identification of image.
f. Meaningful and descriptive filenames unique to each image.

2.04 COPYRIGHT

A. No copyrighted photographs will be accepted.

2.05 EDITING

A. Images shall not be edited in any way.

2.06 TECHNIQUE

A. Factual presentation

B. Magnification commensurate with the level of detail required.

C. Correct image and focus

1. High resolution and sharpness
2. Maximum depth-of-field
3. Minimum distortion

2.07 DELIVERY OF IMAGES

A. Deliver electronic image file to the CITY and ENGINEER to accompany each Application for Payment or as directed.

B. Electronic file storage media shall be a durable, commercial quality USB memory device of sufficient capacity to store the intended contents.

C. Electronic file storage media shall be labeled and identified by project title and project number.

D. The photographer shall keep electronic copies for a minimum of two years from CITY acceptance.

PART 3 - EXECUTION (NOT USED)

END OF SECTION

SECTION 01381 AUDIO/VIDEO PRE-CONSTRUCTION RECORD

PART 1 - GENERAL

1.01 DESCRIPTION

A. The CONTRACTOR shall provide a continuous color video with audio of the entire project prior to construction and at CITY acceptance.

1.02 RELATED SECTIONS

A. As applicable.

1.03 SCHEDULE REQUIRED

A. Video recordings shall not be made more than 30 days prior to construction. No construction shall begin prior to review and approval of the videos by the ENGINEER and the CITY.

B. Videos not conforming to the Specifications shall be resubmitted at no additional charge.

1.04 PROFESSIONAL VIDEOGRAPHERS

A. The CONTRACTOR shall engage the services of a professional videographer. The color audio-visual tapes shall be prepared by a responsible commercial firm known to be skilled and regularly engaged in the business of pre-construction color audio-visual documentation.

PART 2 - PRODUCTS

2.01 GENERAL

A. The finished product shall be a bright, sharp, clear picture free of distortion and show in sufficient detail acceptable to the CITY and ENGINEER.

B. All videos shall be color and in RGB format.

C. The CONTRACTOR shall furnish to the ENGINEER and the CITY two (2) copies each of the electronic file, which becomes a project record document.

D. Electronic file storage media shall be a durable, commercial quality USB memory device or compact disc of sufficient capacity to store the intended contents.

E. Electronic file storage media shall be labeled and identified by project title and project number.

F. The videographer shall keep electronic copies for a minimum of two years from CITY acceptance.

2.02 METADATA

A. Each video must contain descriptive metadata as follows:

a. Name of Project

b. Direction and road names

c. Date and time of image

d. Name and address of videographer

e. Meaningful and descriptive filenames unique to each image.

2.03 COPYRIGHT

A. No copyrighted videos will be accepted.

2.04 EDITING

A. Videos shall not be edited in any way.

PART 3 - EXECUTION

A. The video recording shall show all surface features located within the construction zone. These features shall include, but not be limited to, roadways, sidewalks, outside of houses (front and sides), driveways, culverts, walls, fences, and landscaping. Recording shall zoom and or have high enough definition to clearly show any existing damage, cracking, deterioration, etc.

B. Where station numbering is used, coverage shall begin at the lowest station number and be continuous until the highest station number is reached. Otherwise, the entire length of the project shall be documented including each plan sheet.

C. Provide magnification (zoom) where appropriate to properly display details germane to the subject matter.

D. Maintain camera speed slow enough to achieve detail acceptable to the CITY and ENGINEER.

1. Videos with unacceptable camera speed will not be accepted.
2. Videographer shall be responsible to meet all traffic laws at the time of video including all necessary and appropriate safety measures.

END OF SECTION

SECTION 01400 QUALITY CONTROL

PART 1 - GENERAL

1.01 DESCRIPTION

A. This Section describes the CONTRACTOR's minimum responsibilities in meeting the quality requirements of the Contract Documents.

1.02 RELATED SECTIONS

A. Section 01050 – Field Engineering and Surveying

B. Section 01410 – Materials and Installation Testing

C. Other Sections as applicable.

1.03 OBSERVATION AT PLACE OF MANUFACTURE

A. Unless otherwise specified, all products, materials, and time and equipment shall be subject to observation by the CITY and the ENGINEER at the place of manufacture.

B. The presence of the CITY and/or the ENGINEER at the place of manufacture however, shall not relieve the CONTRACTOR of the responsibility for furnishing products, materials, and equipment which comply with all requirements of the Contract Documents. Compliance is a duty of the CONTRACTOR.

C. The CONTRACTOR shall advise the CITY and ENGINEER promptly upon placing orders for materials and equipment so that arrangements may be made, if desired, for observation before shipment from the place of manufacture.

D. The ENGINEER may require the CONTRACTOR to provide statements or certificates from the manufacturers and fabricators that the materials and equipment provided by them are manufactured or fabricated in full accordance with the standard specifications for quality and workmanship indicated in the Contractor Documents. All costs of this testing and providing statements and certificates shall be a subsidiary obligation of the CONTRACTOR, and no extra charge to the CITY shall be allowed on account of such testing and certification.

1.04 SAMPLING AND TESTING

A. Unless otherwise specified, all sampling and testing shall be in accordance with the methods prescribed in the current standards of the ASTM, as applicable to the class and nature of the article or materials considered.

B. The CITY and the ENGINEER reserve the right to use any generally accepted system of sampling and testing which will insure the quality of the workmanship is in full accord with the Contract Documents.

C. Any waiver by the CITY or ENGINEER of any specific testing or other quality assurance measures, whether or not such waiver is accompanied by a guarantee of substantial performance as a relief from the specified testing or other quality assurance requirements as originally specified, and whether or not such guarantee is accompanied by a performance bond to assure execution of any necessary corrective or remedial WORK, shall not be construed as a waiver of any requirements.

D. The CITY and ENGINEER reserve the right to make independent investigations and tests at any time

E. Failure of any portion of the WORK to meet any of the requirements of the Contract Document shall be reasonable cause for the CITY or ENGINEER to require the removal or correction and reconstruction of any such WORK at the cost of the CONTRACTOR.

1.05 SITE INVESTIGATION AND CONTROL

A. The CONTRACTOR shall verify all dimensions in the field and shall check field conditions continuously during construction. The CONTRACTOR shall be solely responsible for any inaccuracies built into the WORK due to its failure to comply with this requirement.

B. The CONTRACTOR shall inspect related and appurtenant work, and shall report in writing to the CITY and ENGINEER any conditions that will prevent proper completion of the WORK. Failure to report any such conditions shall constitute acceptance of all site conditions, and any required removal, repair, or replacement caused by unsuitable conditions shall be performed by the CONTRACTOR at its cost.

1.06 OBSERVATION AND TESTING

A. The WORK or actions of the testing laboratory shall in no way relieve the CONTRACTOR of its obligations under the Contract. The laboratory testing work will include such observations and testing required by the CITY or ENGINEER. The testing laboratory will have no authority to change the requirements of the Contract Documents, nor perform, accept or approve any of the CONTRACTOR's WORK.

B. The CONTRACTOR shall allow the CITY and ENGINEER ample time and opportunity for field observation and testing materials and equipment to be used in the WORK.

C. The CONTRACTOR shall at all times furnish the CITY and the ENGINEER facilities, including labor, and allow proper time for inspecting and testing materials, equipment, and workmanship.

D. The CONTRACTOR must anticipate that possible delays may occur in the execution of its WORK due to the necessity of materials and equipment being inspected and accepted for use.

E. The CONTRACTOR shall furnish, at its own expense, all samples of materials required by the CITY or ENGINEER for testing, and shall make its own arrangements for providing water, electric power, or fuel for the various observations and tests of structures and equipment.

1.07 RIGHT OF REJECTION

A. The CITY and ENGINEER, shall have the right, at all times and places, to reject any articles or materials to be furnished hereunder which, in any respect, fail to meet the requirements of the Design Criteria Package, regardless of whether the defects in such articles or materials are detected at the point of manufacture or after completion of the WORK at the site.

B. If the CITY or its representative, through an oversight or otherwise, has accepted materials or work which is defective or which is contrary to the Contract Documents, such materials, no matter in what stage or condition of manufacture, delivery, or erection, may be subsequently rejected.

C. The CONTRACTOR shall promptly remove rejected articles or materials from the site of the WORK after notification of rejection. All costs of removal and replacement of rejected articles or materials as specified herein shall be borne by the CONTRACTOR.

PART 2 - PRODUCTS (NOT USED)

PART 3 - EXECUTION

3.01 BUOYANCY

A. The CONTRACTOR shall be completely responsible for any tanks, pipelines, manholes, foundations or similar improvements that may become buoyant during the construction operations due to groundwater levels. Should there be any possibility of buoyancy, the CONTRACTOR shall take the necessary steps to prevent damage due to floating or flooding, and shall repair or replace said improvements at no additional cost.

3.02 DEVIATION FROM SPECIFICATIONS

A. If any part of a submittal deviates from the plans and specifications, it is up to the CONTRACTOR to indicate such deviation—in writing—to the ENGINEER, for determination as to acceptance of the deviation. If no deviation is submitted, it is assumed that the CONTRACTOR has fully and completely followed the plans and specifications, and that any discrepancy discovered during construction shall be corrected completely at the expense of the CONTRACTOR.

3.03 AMERICANS WITH DISABILITIES ACT (ADA)

A. The CONTRACTOR shall make every effort to ensure all concrete work including, but not limited to accessible sidewalks, routes, ramps and curb ramps is compliant with the ADA and Florida Building Code Accessibility.

B. Prior to and during concrete placement, the CONTRACTOR shall verify the formwork for compliance. Any and all concrete work which is not compliant shall be removed and replaced at no cost to the CITY.

END OF SECTION

SECTION 01410 MATERIALS AND INSTALLATION TESTING

PART 1 - GENERAL

1.01 DESCRIPTION

A. The CONTRACTOR shall employ and pay for the services of an independent testing laboratory, approved by the ENGINEER, to perform materials and installation testing of the type and frequency specified in the Contract Documents including, but not limited to, Geotechnical Testing Services and concrete testing.

B. Geotechnical Testing Services shall include, but not be limited to, periodic site inspections, soil proctor tests, soil classification tests and soil densities or compaction tests.

C. The ENGINEER may, at any time, elect to have materials and equipment tested for conformity with the Contract Documents.

D. The CONTRACTOR shall include cost of testing in the Contract Price.

E. Piping pressure test and bacteriological testing shall be in accordance with the applicable Section.

1.02 RELATED SECTIONS

A. Section 01050 – Field Engineering

B. Other Sections as applicable.

1.03 REFERENCES

A. FDOT Design Standards.

B. FDOT Standard Specifications for Road and Bridge Construction.

C. Broward County Traffic Engineering Division (BCTED) Minimum Standards and the BCTED Pavement Markings & Signs Detail Sheet.

1.04 LIMITATIONS OF AUTHORITY OF TESTING LABORATORY

A. Laboratory is not authorized to:

1. Release, revoke, alter or enlarge on requirements of Contract Documents
2. Approve or accept any portion of the WORK
3. Perform any duties of the CONTRACTOR

PART 2 - PRODUCTS (NOT USED)

PART 3 - EXECUTION

3.01 CONTRACTOR'S RESPONSIBILITIES

A. Provide all testing required by the Contract Documents as well as laws, ordinances, rules, regulations, orders, or approvals of public authorities.

B. Employment of the laboratory shall in no way relieve CONTRACTOR's obligations to perform the WORK of the Contract.

C. Cooperate with laboratory personnel, and provide access to WORK and to Manufacturer's operations.

D. Secure and deliver to the laboratory adequate quantities of representational samples of materials proposed to be used and which require testing.

E. Provide to the laboratory the preliminary design mix proposed to be used for concrete and other materials mixes which require control by the testing laboratory.

F. Furnish incidental labor and facilities:

1. To provide access to WORK to be tested
2. To obtain and handle samples at the Project site or at the source of the product to be tested
3. To facilitate inspections and tests
4. For storage and curing of test samples

G. Notify laboratory sufficiently in advance of operations to allow for laboratory assignment of personnel and scheduling of tests.

1. When tests or inspections cannot be performed after such notice, reimburse CITY for laboratory personnel and travel expenses incurred due to CONTRACTOR's negligence.

H. Employ and pay for the services of the same or a separate, equally qualified independent testing laboratory to perform additional inspections, sampling, and testing required for the CONTRACTOR's convenience.

I. If the CITY requests tests in addition to those specified in the contract, and if the test results indicate the material or equipment complies with the Contract Documents, the CITY shall pay for the cost of the testing laboratory. If the tests and any subsequent retests indicate the materials and equipment fail to meet the requirements of the Contract Documents, the CONTRACTOR may pay for the laboratory costs directly to the testing firm or the total of such costs shall be deducted from any payments due the CONTRACTOR.

J. The CONTRACTOR shall pay costs for additional trips to the project by the agency when scheduled times for tests and inspections are canceled and agency is not notified sufficiently in advance of cancellation to avoid the trip.

3.02 TESTING

A. The following types of tests and test frequencies are required. Copies of all reports are to be sent to the ENGINEER immediately upon availability.

1. Density tests for trench backfill at a minimum rate of one (1) test per 6” lift per 100 feet of trench, unless otherwise directed by the ENGINEER.
2. Density tests for subgrade compaction at a minimum rate of three (3) tests per 100 feet of roadway, unless otherwise directed by the ENGINEER.
3. Density tests for limerock base at a minimum rate of three (3) tests per day on each course of completed compacted base, unless otherwise directed by the ENGINEER.
4. Density tests for roadway crossings at the rate of one test per lane per lift of compacted material, beginning one foot above the normal water table.

B. If in the opinion of the ENGINEER, suitable compaction has not been achieved around structures, density tests may be required.

C. Concrete compressive strength at the rate of three (3) cylinders per the lesser of 50 cubic yards or per day.

D. Should the above test results indicate deficiencies, the ENGINEER may order additional tests at the CONTRACTOR's expense, and all reworked areas shall be retested at the CONTRACTOR's expense.

E. Testing in the County or State right-of-way shall meet the requirements of the Florida Department of Transportation.

END OF SECTION

SECTION 01505 CONTROL OF WORK

PART 1 - GENERAL

1.01 DESCRIPTION

A. The CONTRACTOR shall furnish personnel and equipment which will be efficient, appropriate and a quantity large enough to secure a satisfactory quality of work and a rate of progress which will insure the completion of the work within the time stipulated. If at any time such personnel appear to the ENGINEER to be inefficient, inappropriate, or insufficient for securing the quality of work required or for producing the rate of progress aforesaid, he may order the CONTRACTOR to increase the efficiency, change the character or increase the personnel and equipment, and the CONTRACTOR shall conform to such order. Failure of the ENGINEER to give such order shall in no way relieve the CONTRACTOR of his obligations to secure the quality of the work and rate of progress required.

1.02 RELATED SECTIONS

A. Section 01010 – Summary of Work

B. Section 01011 – Special Project Procedures

C. Section 01015 – General Requirements

D. Other Sections as applicable.

1.03 PIPE LOCATIONS

A. Pipeline shall be located substantially as indicated on the DRAWINGS, but the ENGINEER reserves the right to make such modifications in locations as may be found desirable to avoid interference with existing structures or for other reasons.

1.04 OBSTRUCTIONS

A. The attention of the CONTRACTOR is drawn to the fact that during digging at the Project site, the possibility exists of the CONTRACTOR encountering various water, sewer, gas, telephone, electrical, or other lines not shown on the DRAWINGS. The CONTRACTOR shall exercise extreme care before and during digging to locate and flag these lines so as to avoid damage to the existing lines. Should damage occur to an existing line, The CONTRACTOR shall repair the line at no cost to the CITY.

B. The CONTRACTOR shall protect all existing utilities and improvements not designated for removal and shall restore damaged or temporarily relocated utilities and improvements to a condition equal to or better than they were prior to such damage or temporary relocation, all in accordance with requirements of the Contract Documents.

C. The CONTRACTOR shall verify the exact locations and depths of all utilities shown and the CONTRACTOR shall make exploratory excavations of all utilities that may interfere with the WORK. All such exploratory excavations shall be performed as soon as practicable after award of the contract and, in any event, a sufficient time in advance of construction to avoid possible delays to the CONTRACTOR's WORK. When such exploratory excavations show the utility location as shown to be in error, the CONTRACTOR shall so notify the ENGINEER.

D. The number of exploratory excavations required shall be that number which is sufficient to determine the alignment and grade of the utility. Test pits shall be dug at the CONTRACTOR's expense, as directed.

E. The CONTRACTOR shall protect all Underground Utilities and other improvements which may be impaired during construction operations. It shall be the CONTRACTOR's responsibility to ascertain the actual location of all existing utilities and other improvements that will be encountered in its construction operations, and to see that such utilities or other improvements are adequately protected from damage due to such operations. The CONTRACTOR shall take all possible precautions for the protection of unforeseen utility lines to provide for uninterrupted service and to provide such special protection as may be necessary.

F. In case it shall be necessary to move the property of any public utility or franchise holder, such utility company or franchise holder will, upon request of the CONTRACTOR, be notified by the CITY to move such property within a specified reasonable time. When utility lines that are to be removed are encountered within the area of operations, the CONTRACTOR shall notify the ENGINEER a sufficient time in advance for the necessary measures to be taken to prevent interruption of service.

G. Where the proper completion of the WORK requires the temporary or permanent removal and/or relocation of an existing utility or other improvement which is indicated, the CONTRACTOR shall remove and, without unnecessary delay, temporarily replace or relocate such utility or improvement in a manner satisfactory to the ENGINEER and the CITY of the facility. In all cases of such temporary removal or relocation, restoration to former location shall be accomplished by the CONTRACTOR in a manner that will restore or replace the utility or improvement as nearly as possible to its former locations and to as good or better condition than found prior to removal.

H. Existing utility lines that are indicated or the locations of which are made known to the CONTRACTOR prior to excavation and that are to be retained, and all utility lines that are constructed during excavation operations shall be protected from damage during excavation and backfilling and, if damaged, shall be immediately repaired or replaced by the CONTRACTOR at the CONTRACTOR's expense. Sewer laterals are included.

I. All repairs to a damaged utility or improvement are subject to inspection and approval by an authorized representative of the utility or improvement owner before being concealed by backfill or other WORK.

J. All power, telephone or the communication cable ducts, gas and water mains, irrigation lines, sewer lines, storm drain lines, poles, and overhead power and communication wires and any other cables encountered along the line of the WORK shall remain continuously in service during all the operations under the Contract, unless other arrangements satisfactory to the ENGINEER are made with the owner of said pipelines, duct, main, irrigation line, sewer, storm drain, pole, or wire or cable. The CONTRACTOR shall be responsible for and shall repair all damage due to its operations, and the provisions of this Section shall not be abated even in the event such damage occurs after backfilling or is not discovered until after completion of the backfilling.

1.05 OPEN EXCAVATIONS

A. All open excavations shall be adequately safeguarded by providing temporary barricades, caution signs, lights, and other means to prevent accidents to persons, and damage to property. The CONTRACTOR shall, at his own expense, provide suitable and safe bridges and other crossings for accommodating travel by pedestrians and workmen. Bridges provided for access to private property during construction shall be removed when no

longer required. The length of open trench will be controlled by the particular surrounding conditions, but shall always be confined to the limits prescribed by the ENGINEER. If the excavation becomes a hazard, or if it excessively restricts traffic at any point, the ENGINEER may require special construction procedures such a limiting the length of open trench or prohibiting stacking excavated material in the street, and requiring that the trenches shall not remain open overnight.

B. The CONTRACTOR shall take precautions to prevent injury to the public due to open trenches. All trenches, excavated material, equipment, or other obstacles which could be dangerous to the public shall be well lit at night.

1.06 TEST PITS

A. Test pits for the purpose of locating underground pipeline or structures in advance of the construction shall be excavated and backfilled by the CONTRACTOR at his cost at the direction of the ENGINEER. Test pits shall be backfilled immediately after their purpose has been satisfied and the surface restored and maintained in a manner satisfactory to the ENGINEERs.

1.07 UTILITY CROSSINGS

A. It is intended that wherever existing utilities such as service lines must be crossed, deflection of the pipe within recommended limits and cover shall be used to satisfactorily clear the obstruction unless otherwise indicated on the DRAWINGS. However, when in the opinion of the ENGINEER or the CITY this procedure is not feasible he may direct the use of fittings.

1.08 SANITATION

A. Toilet Facilities - Fixed or portable chemical toilets shall be provided wherever needed for the use of employees. Toilets at construction job sites shall conform to the requirements of Part 1926 of the OSHA Standards for Construction.

B. Sanitary and Other Organic Wastes - The CONTRACTOR shall establish a regular daily collection of all sanitary and organic wastes. All wastes and refuse from sanitary facilities provided by the CONTRACTOR or organic material wastes from any other source related to the CONTRACTOR's operations shall be disposed of away from the site in a manner satisfactory to the ENGINEER and in accordance with all laws and regulations pertaining thereto.

1.09 RELOCATIONS

A. The CONTRACTOR shall be responsible for the relocation of structures, including but not limited to light poles, signs, sign poles, fences, piping, conduits, and drains that interfere with the positioning of the WORK as set out on the DRAWINGS. The cost of all such relocations shall be included in the bid for the project and shall not result in any additional cost to the CITY.

PART 2 - PRODUCTS (NOT USED)

PART 3 - EXECUTION

3.01 COOPERATION WITHIN THIS CONTRACT

A. All firms or persons authorized to perform any WORK under this Contract shall cooperate with the General Contractor and his subcontractors or trades, and shall assist in

incorporating the WORK of other trades where necessary or required.

B. Cutting and patching, drilling and fitting shall be carried out where required by the trade or subcontractor having jurisdiction, unless otherwise indicated herein or directed by the ENGINEER.

3.02 PROTECTION OF CONSTRUCTION AND EQUIPMENT

A. All newly constructed work shall be carefully protected from injury in any way. No wheeling or walking or placing of heavy loads on it shall be allowed and all portions injured shall be reconstructed by the CONTRACTOR at his own expense.

B. Further, the CONTRACTOR shall take all necessary precaution to prevent damage to any structure due to water pressure during and after construction and until such structure is accepted and taken over by the CITY.

3.03 PRIVATE LAND

A. The CONTRACTOR shall not enter or occupy private land outside of easements, except by written permission of the land owner.

3.04 RESTORATION

A. Temporary restoration shall be completed within five days of pipe installation. Temporary restoration shall include all driveways, sidewalks, and roadways. They shall be swept clean and be maintained free of dirt and dust. All areas disturbed by the construction activities shall be restored to proper grade, cleaned up, including the removal of debris, trash, and deleterious materials. All construction materials, supplies, or equipment, including piles of debris shall be removed from the area. All temporarily restored areas shall be maintained by the CONTRACTOR. These areas shall be kept clean and neat, free of dust and dirt, until final restoration operations are completed. The CONTRACTOR is responsible to utilize dust abatement operations in the temporarily restored areas as required, to the satisfaction of the ENGINEER.

B. Wherever sidewalks or private roads have been removed for purposes of construction, the CONTRACTOR shall place suitable temporary sidewalks or roadways promptly after backfilling and shall maintain them in satisfactory condition for the period of time fixed by the authorities having jurisdiction over the affected portions before proceeding with the final restoration or, if no such period of times is so fixed, the CONTRACTOR shall maintain said temporary sidewalks or roadways until the final restoration thereof has been made.

C. Final restoration shall be completed within thirty days of pipe acceptance. Final restoration shall include the completion of all required pavement replacement of roadways, driveways, curbs, gutters, sidewalks and other existing improvements disturbed by the construction; final grading, placement of sod, pavement marking, etc., all complete and finished, acceptable to the ENGINEER.

D. In order to obtain a satisfactory junction with adjacent surfaces, the CONTRACTOR shall saw cut back and trim the edge so as to provide a clean, sound, vertical joint before permanent replacement of an excavated or damaged portion of pavement. Damaged edges of pavement along excavations and elsewhere shall be trimmed back by saw cutting in straight lines. All pavement restoration and other facilities restoration shall be constructed to finish grades compatible with the adjacent undisturbed pavement.

E. The CONTRACTOR shall test an installed section of pipeline within five calendar days from completion of the pipeline. A section of pipe is defined as a pipe section which can be isolated by valves for appurtenances is satisfactorily completed, the CONTRACTOR shall provide the ENGINEER with a "Schedule of Existing Facilities Restoration" which will be

reviewed and be acceptable to the ENGINEER. The schedule shall show the existing facilities to be restored and schedule of beginning and completion dates for each item of restoration. The work for completing the final restoration of existing facilities for a tested section of work shall be completed within 30 days of acceptance of the pipeline testing.

END OF SECTION

SECTION 01510 TEMPORARY UTILITIES

PART 1 - GENERAL

1.01 DESCRIPTION

A. Furnish, install and maintain temporary utilities required for construction, remove on completion of WORK.

B. Pay all fees associated with temporary utilities including water consumption charges.

1.02 RELATED SECTIONS

A. Section 01010 - Summary of Work

B. Other Sections as applicable.

1.03 REQUIREMENTS OF REGULATORY AGENCIES

A. Comply with National Electric Code.

B. Comply with Federal, State and Local codes and regulations and with utility company requirements.

C. Comply with County Health Department and Environmental Regulations.

PART 2 - PRODUCTS

2.01 MATERIALS

A. Materials may be new or used, but must be adequate in capacity for the required usage, must not create unsafe conditions, and must not violate requirements of applicable codes and standards.

2.02 TEMPORARY ELECTRICITY AND LIGHTING

A. Arrange with utility company, provide service required for power and lighting, and pay all costs for service and for power used in the construction, testing, and trial operation prior to final acceptance of the WORK by the CITY.

B. Install circuit and branch wiring, with the area distribution boxes located so that power and lighting is available throughout the construction by the use of construction type power cords.

C. Provide adequate artificial lighting for all areas of WORK when natural light is not adequate to WORK, and all areas accessible to the public.

2.03 TEMPORARY WATER

A. Arrange with the water utility provider to provide water for construction purposes.

B. Install branch piping with taps located so that water is available throughout the construction by the use of hoses.

C. Install at each and every connection to the CITY water supply a backflow preventer meeting the requirements of ANSI A40.6 and AWWA C511. The CONTRACTOR shall be required to meter and pay for all water used.

2.04 TEMPORARY SANITARY FACILITIES

A. Provide sanitary facilities in compliance with laws and regulations.

B. Service, clean and maintain facilities and enclosures.

PART 3 - EXECUTION

3.01 GENERAL

A. Maintain and operate systems to assure continuous service.

B. Modify and extend systems as work progress requires.

3.02 REMOVAL

A. Completely remove temporary materials and equipment when their use is no longer required.

B. Clean and repair damage caused by temporary installations or use of temporary facilities.

C. Restore permanent facilities used for temporary services to specified condition.

END OF SECTION

SECTION 01530 EXISTING UTILITIES

PART 1 - GENERAL

1.01 DESCRIPTION

A. This Section provides for specifications related to construction in the vicinity of existing utilities.

1.02 RELATED SECTIONS

A. Section 01010 – Summary of Work

B. Section 01015 – General Requirements

C. Section 01011 – Special Project Procedures

D. Other Sections as applicable.

1.03 CONTRACTOR RESPONSIBILITIES

A. The term existing utilities shall be deemed to refer to both publicly-owned and privately-owned utilities including, but not limited to, electric power and lighting, telephone, water, gas, storm drains, process lines, sanitary sewers, and all appurtenant structures.

B. Prior to underground construction, the CONTRACTOR is required by the Underground Facility Damage Prevention and Safety Act, Chapter 556 FS to contact Sunshine 811, for the location of underground utilities.

C. Where existing utilities and structures are indicated in the Contract Documents, it shall be understood that all of the existing utilities and structures affecting the WORK may not be shown and that the locations of those shown are approximate only. It shall be the responsibility of the CONTRACTOR to ascertain the actual extent and exact location of existing utilities and structures. In every instance, the CONTRACTOR shall notify the proper authority having jurisdiction and obtain all necessary directions and approvals before performing any WORK in the vicinity of existing utilities.

1.04 NOTIFICATION OF UTILITY OWNER

A. Prior to any excavation in the vicinity of any existing underground facilities, including all water, sewer, storm drain, gas, petroleum products, or other pipelines; all buried electric power, communications, or television cables; all traffic signal and street lighting facilities; and all roadway and state highway rights-of-way the CONTRACTOR shall notify the respective authorities representing the CITY's or agencies responsible for such facilities not less than three days nor more than seven days prior to excavation so that a representative may be present during such excavation.

PART 2 - PRODUCTS (NOT USED)

PART 3 - EXECUTION

3.01 TEMPORARY CONNECTIONS

A. The WORK shall be carried out in a manner to prevent disruption of existing services and to avoid damage to the existing utilities. Temporary connections shall be provided, as required, to insure no interruption of existing services. Any damage resulting from the WORK of this Contract shall be promptly repaired by the CONTRACTOR at his own expense

in a manner approved by the ENGINEER and further subject to the requirements of any authority having jurisdiction. Where it is required by the authority having jurisdiction that they perform their own repairs or have them done by others, the CONTRACTOR shall be responsible for all costs thereof.

3.02 UTILITY SUPPORT

A. Where excavations by the CONTRACTOR require any utility lines or appurtenant structures to be temporarily supported and otherwise protected during the construction work, such support and protection shall be provided by the CONTRACTOR. All such WORK shall be performed in a manner satisfactory to the respective authority having jurisdiction over such WORK.

3.03 UTILITY CROSSINGS

A. It is intended that wherever existing utilities such as water, chemical, electrical, or other service lines must be crossed, deflection of the pipe within limits recommended by the pipe manufacturer and the required minimum cover shall be used to satisfactorily clear the obstruction unless otherwise indicated on the DRAWINGS. However, when, in the opinion of the CITY or ENGINEER, this procedure is not feasible the ENGINEER may direct the use of fittings for a utility crossing as detailed on the DRAWINGS. All existing utilities shall be pothole located prior to construction of conflicting piping.

3.04 ADVANCE INVESTIGATIONS

A. The CONTRACTOR shall be responsible for uncovering and exposing existing utilities sufficiently in advance of pipe laying operations to confirm elevation, size, material, and clearance separation(s). If, upon excavation, an existing utility is found to be in conflict with the proposed construction or be of a size or material different from what is shown on the plans, the CONTRACTOR shall immediately notify the ENGINEER, who will in turn prepare a recommendation. Failure of the CONTRACTOR to perform the advance investigation shall not relieve it of any claims for delay or damages.

3.05 UNFORESEEN UTILITIES

A. The attention of the CONTRACTOR is drawn to the fact that during excavation, the possibility exists of encountering water, sewer, petroleum, gas, telephone, electrical, or other utilities not shown on the DRAWINGS. The CONTRACTOR is responsible for obtaining utility locations from the utility owners or utility locating company. The CONTRACTOR shall exercise extreme care before and during digging to locate and flag these lines so as to avoid damage to the existing lines. Should damage occur to an existing line, the CONTRACTOR shall repair the line at the no cost to the CITY.

3.06 CONNECTIONS TO EXISTING SYSTEMS

A. The CONTRACTOR shall perform all WORK necessary to locate, excavate, and prepare for connections to the terminus of the existing mains all as shown on the DRAWINGS or where directed by the CITY. The cost of this WORK and the cost for the actual connection to the existing mains shall be included in the bid price as a separate item and shall not result in any additional cost to the CITY.

3.07 MAINTENANCE OF EXISTING STORM WATER FACILITIES OPERATION

A. The CONTRACTOR shall take notice that existing storm water pump station is operated in the construction area. It is the responsibility of the CONTRACTOR to contact the CITY's utility operator and ascertain the extent of any specific service area.

B. The CONTRACTOR shall fully cooperate at all times with the CITY in order to maintain the operation of the existing facilities with the least amount of interference and interruption possible. Continuous service, public health, and safety considerations shall exceed all others and the CONTRACTOR's schedule, plans, and WORK shall at all times be subject to alteration and revision, if necessary, for the above considerations.

C. The ENGINEER and CITY reserve the right to require the CONTRACTOR to work 24 hours per day in all cases where, in their opinion, interference with operation of the system may result.

D. In no case will the CONTRACTOR be permitted to interfere with the existing system until all materials, supplies, equipment, tools, and incidentals necessary to complete the interfering portion of the WORK are on the site, or a temporary by=pass system is effectively in place. All existing utilities shall be pothole located prior to construction of conflicting piping.

E. The CONTRACTOR shall provide emergency storm drainage pumping as specified in the Contract Documents.

3.08 RESTORATION OF PAVEMENT

A. General: All paved areas including concrete, asphaltic concrete, berms cut or damaged during construction shall be replaced with similar materials and of equal thickness to match the existing adjacent undisturbed areas, except where specific resurfacing requirements have been called for in the Contract Documents. All pavements which are subject to partial removal shall be neatly saw-cut in straight lines.

B. Temporary Resurfacing: Wherever required by the public authorities having jurisdiction, the CONTRACTOR shall place temporary surfacing promptly after backfilling and shall maintain such surfacing for the period of time fixed by said authorities before proceeding with the final restoration of improvements.

C. Permanent Resurfacing: In order to obtain a satisfactory junction with adjacent surfaces, the CONTRACTOR shall saw-cut back and trim the edge so as to provide a clean, sound, vertical joint before permanent replacement of an excavated or damaged portion of pavement. Damaged edges of pavement along excavations and elsewhere shall be trimmed back by saw cutting in straight lines. All pavement restoration and other facilities restoration shall be constructed to finish grades compatible with adjacent undisturbed pavement.

END OF SECTION

SECTION 01531 PROTECTION OF EXISTING PROPERTY

PART 1 - GENERAL

1.01 DESCRIPTION

A. The CONTRACTOR shall be responsible for the preservation and protection of property adjacent to the work site against damage or injury as a result of his operations under this project. Any damage or injury occurring on account of any act, omission or neglect on the part of the CONTRACTOR shall be restored in a proper and satisfactory manner or replaced by and at the expense of the CONTRACTOR to an equal or superior condition than previously existed.

B. In the event of any claims for damage or alleged damage to property as a result of WORK, the CONTRACTOR shall be responsible for all costs in connection with the settlement of or defense against such claims. Prior to commencement of WORK in the vicinity of property adjacent to the work site, the CONTRACTOR, at his own expense, shall take such surveys as may be necessary to establish the existing condition of the property. Before final payment can be made, the CONTRACTOR shall furnish satisfactory evidence that all claims for damage have been legally settled or sufficient funds to cover such claims have been placed in escrow, or that an adequate bond to cover such claims has been obtained.

1.02 RELATED SECTIONS

A. Section 01011 – Special Project Procedures

B. Section 01015 – General Requirements

C. Section 01570 – Traffic Regulation

D. Other Sections as applicable.

1.03 BARRICADES, WARNING SIGNS AND LIGHTS

A. In addition to the requirements of Section 01570 – Traffic Regulation, the CONTRACTOR shall provide, erect, and maintain as necessary, strong and suitable barricades, danger signs, and warning lights for the preservation and protection of property adjacent to the work site. All barricades and obstructions along public roads shall be illuminated at night and all lights for this purpose shall be kept burning from sunset to sunrise.

1.04 TREES AND LANDSCAPING PROTECTION

A. General: The CONTRACTOR shall exercise all necessary precautions so as not to damage or destroy any trees or landscaping in or near the project site, and shall not trim or remove any trees or landscaping unless such trees or landscaping have been approved for trimming or removal by the jurisdictional agency or CITY. All existing trees or landscaping which are damaged during construction shall be replaced by the CONTRACTOR or a certified tree/landscaping company to the satisfaction of the CITY.

B. Replacement: The CONTRACTOR shall immediately notify the jurisdictional agency or CITY if any tree or landscaping is damaged by the CONTRACTOR's operations. If, in the opinion of the jurisdictional agency or CITY, the damage is such that replacement is necessary, the CONTRACTOR shall replace the tree or landscaping at its own expense. The tree or landscaping shall be of a like size and variety as the tree or landscaping damaged, or, if of a smaller size, the CONTRACTOR shall pay any compensatory payment.

C. All permit fees associated with the removal and replacement of trees and landscaping damaged or destroyed shall be the responsibility of the CONTRACTOR.

PART 2 - PRODUCTS (NOT USED)

PART 3 - EXECUTION (NOT USED)

END OF SECTION

SECTION 01540 SECURITY

PART 1 - GENERAL

1.01 DESCRIPTION

A. This Section provides for requirements of security, entry control, personnel identification and miscellaneous restrictions.

1.02 RELATED SECTIONS

A. Section 01010 - Summary of WORK

B. Other Sections as applicable.

1.03 SECURITY PROGRAM

A. Protect WORK, existing premises and CITY's operations from theft, vandalism, and unauthorized entry.

B. Initiate program in coordination with CITY's existing security system at job mobilization.

C. Maintain program throughout construction period until CITY occupancy as directed by ENGINEER.

1.04 ENTRY CONTROL

A. Restrict entrance of persons and vehicles into project site and existing facilities.

B. Allow entrance only to authorized persons with proper identification.

C. Maintain log of workmen and visitors, make available to CITY on request.

D. Coordinate access of CITY's personnel to site in coordination with CITY's security forces.

1.05 PERSONNEL IDENTIFICATION

A. All personnel shall wear clothing bearing the company information of which they are employed.

B. Provide additional security as required by the CITY.

C. Become familiar with CITY and ENGINEER representatives and restrict access to job site to these representatives.

PART 2 - PRODUCTS (NOT USED)

PART 3 - EXECUTION (NOT USED)

END OF SECTION

SECTION 01550 SITE ACCESS AND STORAGE

PART 1 - GENERAL

1.01 GENERAL

A. This section provides general specifications for the CONTRACTORs' mobilization, de-mobilization, access to the site and limitations on storage or lay-down area.

B. Mobilization shall include the obtaining of all permits and cost of permits excluding the reimbursable permit fees as specified in Section 01012; moving onto the site of all equipment and other construction facilities; and implementing security requirements; all as required for the proper performance and completion of the WORK. Mobilization shall include the following principal items:

1. Moving on to the site of all CONTRACTOR's equipment required for first month operations.
2. Installing temporary construction power, wiring, and lighting facilities.
3. Developing construction water supply.
4. Providing all on-site communication facilities, including telephones and radio pagers.
5. Providing on-site sanitary facilities, potable water facilities, and solid waste disposal; including a waste management firm.
6. Obtaining all required permits, bonds, and insurance.
7. Having all OSHA required notices and establishment of safety programs.
8. Submitting initial submittals (as indicated in Section 01340), and construction of the project information sign.
9. Audio-Visual preconstruction record as described in Section 01381.
10. Arranging for and erection of CONTRACTOR's WORK and storage yard.
11. Having the CONTRACTOR's superintendent at the job site full time.
12. Site Security / Site Maintenance.
13. Furnish and install miscellaneous barriers and protective devices other than Maintenance of Traffic.
14. Prepare, submit, implement & maintain necessary documents to comply with the National Pollution Discharge Elimination System permit program, including all permit fees. These documents include but are not limited to, Notice of Intent, Stormwater Pollution Prevention Plans, Notice of Termination, etc., in accordance with the requirements of Florida Department of Environmental Protection.

1.02 RELATED SECTIONS

A. Section 01011 – Special Project Procedures

B. Section 01015 – General Requirements

C. Section 01505 – Control of Work

D. Section 01580 – Project Identification Signs

E. Section 01600 – Material and Equipment

F. Other Sections as applicable.

1.03 REFERENCES

A. FDOT Standard Specifications for Road and Bridge Construction

B. FDOT Design Standards

C. Broward County Traffic Engineering Division (BCTED) Minimum Standards

D. Standards and Specifications of the allocable local municipality

E. The requirements of the CITY

1.04 HIGHWAY LIMITATIONS

A. The CONTRACTOR shall make his own investigation of the condition of available public and private roads and of clearances, restrictions, bridge load limits, and other limitations affecting transportation and ingress and egress to the site of the work.

1.05 CONTRACTOR'S WORK AND STORAGE AREA

A. CONTRACTOR's work and storage area plan shall be submitted for CITY's approval no later than 30 days after NTP. NTP will not be issued until the final approval is obtained.

1. CITY approval of the WORK are and storage plan is required prior to commencement.
2. The limits of the CONTRACTOR's staging area and other applicable restrictions shall be subject to the local municipality.

B. The CONTRACTOR shall make his own arrangements and pay for any necessary off-site storage or shop areas necessary for the proper execution of the WORK.

C. Storage and staging facilities are permitted on private property subject to the review and approval of the City's Planning and Zoning Department and issuance of a permit under the provisions of Section 47-19.2 of the Unified Land Development Regulations.

D. The staging area sign shall be limited to overall dimensions of 4'x4'.

PART 2 - PRODUCTS (NOT USED)

PART 3 - EXECUTION

3.01 GENERAL

A. The CONTRACTOR shall set up construction facilities in a neat and orderly manner within designated areas and shall confine operations to work and storage areas.

3.02 RESTORATION

A. All areas disturbed by the construction activities shall be restored to proper grade, cleaned up, including the removal of debris, trash, and deleterious materials.

B. Temporary restoration shall include all driveways, sidewalks, and roadways. They shall be swept clean and be maintained free of dirt and dust

C. All construction materials, supplies, or equipment, including piles of debris shall be removed from the area.

D. All temporarily restored areas shall be maintained by the CONTRACTOR. These areas shall be kept clean and neat, free of dust and dirt, until final restoration operations are completed.

E. Temporary restoration shall be completed within five days of pipe installation or as specified.

F. The CONTRACTOR is responsible to utilize dust abatement operations in the temporarily restored areas as required, to the satisfaction of the ENGINEER.

G. Final restoration shall be completed within thirty days of pipe acceptance. Final restoration shall include the completion of all required pavement replacement of roadways, driveways, curbs, gutters, sidewalks and other existing improvements disturbed by the construction; final grading, placement of sod, pavement marking, etc., all complete and finished, acceptable to the ENGINEER.

H. In order to obtain a satisfactory junction with adjacent surfaces, the CONTRACTOR shall saw cut back and trim the edge so as to provide a clean, sound, vertical joint before permanent replacement of an excavated or damaged portion of pavement. Damaged edges of pavement along excavations and elsewhere shall be trimmed back by saw cutting in straight lines. All pavement restoration and other facilities restoration shall be constructed to finish grades compatible with the adjacent undisturbed pavement.

3.03 DEMOBILIZATION

A. At the completion of WORK the CONTRACTOR shall remove its personnel, equipment, and temporary facilities from the site in a timely manner. The CONTRACTOR shall also be responsible for transporting all unused materials belonging to the CITY to a place of storage on site designated by the CITY and for removing from the site and disposing of all other materials and debris resulting from the construction. It shall then return all areas used for its activities to a condition as recorded in the pre- construction video or better.

END OF SECTION

SECTION 01570 TRAFFIC REGULATION

PART 1 - GENERAL

1.01 DESCRIPTION

A. The WORK to be performed under this section shall include furnishing all materials and labor necessary to regulate vehicular and pedestrian traffic.

B. Provide, operate, and maintain equipment, services, and personnel, with traffic control and protective devices, as required to expedite vehicular traffic flow around the construction area.

C. Remove temporary equipment and facilities when no longer required, restore grounds to original, or to specified conditions.

1.02 RELATED SECTIONS

A. Section 01011 – Special Project Procedures

B. Section 01015 – General Requirements

C. Section 01505 – Control of Work

D. Other Sections as applicable.

1.03 REFERENCES

A. The WORK under this Contract shall be in strict accordance with the following codes and standards.

1. The City of Fort Lauderdale
2. Florida Department of Transportation Design Standards and Specifications
3. OSHA Safety and Health Standards for Construction.
4. Federal Highway Administration Manual of Uniform Traffic Control Devices for Streets and Highways (MUTCD)
5. Federal Highway Administration Traffic Controls for Street and Highway Construction and Maintenance Operations

PART 2 - PRODUCTS (NOT USED)

PART 3 - EXECUTION

3.01 MAINTENANCE OF TRAFFIC

A. For the maintenance and protection of vehicular and pedestrian traffic in public or private streets and ways, the CONTRACTOR shall provide, place, and maintain all necessary barricades, traffic cones, warning signs, lights and other safety devices in accordance with the requirements of the "Manual of Uniform Traffic Control Devices, Part VI - Traffic Controls for Street and Highway Construction and Maintenance Operations," published by U.S. Department of Transportation, Federal Highway Administration (ANSI D6.1).

B. The CONTRACTOR shall provide a Maintenance of Traffic Plan, sealed by a Professional Engineer registered in the State of Florida holding a current FDOT MOT certificate. The plan, and subsequent revisions, must be approved by the Broward County or the Florida

Department of Transportation and the applicable local municipality.

C. The CONTRACTOR shall take all necessary precautions for the protection of the WORK and the safety of the public. All barricades and obstructions shall be illuminated at night, and all lights shall be kept burning from sunset until sunrise. The CONTRACTOR shall station such guards or flaggers and shall conform to such special safety regulations relating to traffic control as may be required by the public authorities within their respective jurisdictions. All signs, signals, and barricades shall conform to the requirements of OSHA and Subpart G, Part 1926, of the OSHA Safety and Health Standards for Construction.

D. The CONTRACTOR shall remove traffic control devices when no longer needed, shall repair all damage caused by installation of the devices, and shall remove post settings and backfill the resulting holes to match grade.

3.02 CORRECTIONS

A. Upon notification by the CITY either verbally or in writing, the CONTRACTOR shall correct any noted deficiencies within one hour.

B. Inspection of all traffic control items shall be accomplished at least twice per day. One of these inspections shall be at the end of the WORK day or at night.

3.03 TRAFFIC AND VEHICULAR ACCESS:

A. Emergency Vehicles: No single family residence, multi-family residence, apartment, commercial building, or place of employment shall be without access to emergency vehicles for a period longer than three hours.

B. The CONTRACTOR shall notify in writing the ENGINEER, the police, fire, hospitals and other emergency departments and agencies when and where WORK is to be accomplished that will affect their operations at least two days in advance of such WORK.

C. Commercial Properties: Access to commercial property shall not be blocked for a period of more than 30 minutes during the time such properties are open for business.

D. Residential Property: Access to residential property shall not be blocked for a period of more than 4 hours.

3.04 ROAD CLOSURE

A. No roads shall be blocked to traffic without adequate detour facilities for a period of more than 30 minutes or as directed by the governing authority.

B. At least 14 days prior to a proposed road closure, the CONTRACTOR shall submit to the City Engineer a complete traffic control plan. This plan shall include the following minimum information:

1. Sketch of WORK site and all area roads, streets and mark driveways.
2. Proposed detour route.
3. Evidence of coordination with the police, fire, hospitals and other emergency departments and agencies.
4. All necessary traffic control devices to be used.
5. Emergency contractor contact person name and phone to be available 24 hours a day.
6. Estimated times/dates of road closure.
7. Refer to Contract drawings for additional notes and requirements.

3.05 CONSTRUCTION IN OTHER THAN STATE HIGHWAY RIGHT-OF-WAY:

A. Construction within right-of-way other than State highway shall be made in full compliance with all requirements of the Florida Department of Transportation and to the satisfaction of the City of Fort Lauderdale. All necessary barricades, detours, lights and other protective measures shall be provided for the protection of both pedestrian and vehicular traffic.

B. The CONTRACTOR shall provide and maintain such other warning signs and barricades in areas of and around their respective WORK as may be required for the safety of all those employed in the WORK or those visiting the site.

3.06 FLAGGER

A. Provide qualified and suitably equipped flagger when construction operations encroach on traffic lanes, as required for regulation of traffic.

3.07 FLARES AND LIGHTS

A. Provide lights as required to clearly delineate traffic lanes and to guide traffic as required.

B. Provide lights for use by flagger in directing traffic.

C. Provide illumination of critical traffic and parking areas as required.

3.08 CONSTRUCTION PARKING CONTROL

A. Control vehicular parking to preclude interference with public traffic or parking, access by emergency vehicles, CITY's operations, or construction operations.

B. Monitor parking of construction personnel's private vehicles.

C. Maintain free vehicular access to and through parking areas and driveways.

D. Prohibit parking on or adjacent to access roads, or in non-designated areas.

END OF SECTION

SECTION 01580 PROJECT IDENTIFICATION SIGNS

PART 1 - GENERAL

1.01 REQUIREMENTS INCLUDED

A. Furnish, install, and maintain one project identification sign.

B. Remove sign upon completion of construction.

C. Allow no other signs to be displayed without approval of the CITY.

1.02 PROJECT IDENTIFICATION SIGN

A. One painted or printed sign of size, design, and lettering as shown on sample provided by the CITY (below is a sample not specific to the project).

1.03 QUALITY ASSURANCE

A. Provide one electronic proof for the CITY approval prior to release for printing or painting.

PART 2 - PRODUCTS

2.01 SIGN MATERIALS

A. Structure and framing shall be pressure treated (2) 4"x4"x10' posts.

B. Foundation shall be two eighty pound bags of concrete per post.

C. Sign surfaces shall be exterior grade plywood 8 feet wide by 4 feet high with a minimum thickness of 5/8 inch.

D. Rough Hardware: Galvanized

E. Finishes and painting shall be adequate to resist weathering and fading for scheduled construction period.

PART 3 - EXECUTION

3.01 PROJECT IDENTIFICATION SIGN

A. Paint exposed surfaces of supports, framing and surface material; one coat of primer and one coat of exterior paint.

B. Paint graphics in styles, sizes, and colors as provided by the CITY during the preconstruction meeting.

C. Lettering shall be as noted.

D. Logo shall be shown as directed by the CITY.

E. Background shall be white.

3.02 SIGN LOCATION

A. Sign shall be located within the rights-of-way or in an area approved by the CITY.

3.03 MAINTENANCE

A. Maintain sign and supports in a neat, clean condition; repair damages to structure, framing or sign.

B. Relocate sign as required by progress of the WORK.

3.04 REMOVAL

A. Remove sign, framing, supports, and foundations at completion of project or at direction of the CITY.

END OF SECTION

SECTION 01600 MATERIAL AND EQUIPMENT

PART 1 - GENERAL

1.01 DESCRIPTION

A. Material and equipment incorporated into the WORK.

1. Conform to applicable specifications and standards.
2. Comply with size, make, and type and qualify specified, or as specifically approved in writing by the ENGINEER.
3. Manufactured and Fabricated Products.
   a. Design, fabricate, and assemble in accord with the best Engineering and shop practices.
   b. Manufacture like part of duplicate units to standard sizes and gauges, to be interchangeable.
   c. Two or more items of the same kind shall be identical, by the same manufacturer.
   d. Products shall be suitable for service conditions.
   e. Equipment capacities, sizes, and dimensions shown or specified shall be adhered to unless variations are specifically approved in writing.
4. Do not use material or equipment for any purpose other than that for which it is designed or is specified.

1.02 RELATED SECTIONS

A. Section 01011 - Special Project Procedures

B. Section 01340 - Shop Drawings, Working Drawings, and Samples

C. Section 01630 - Substitutions

D. Section 01720 - Project Record Documents

E. Other Sections as applicable.

1.03 APPROVAL OF MATERIALS

A. Only new materials and equipment shall be incorporated in the WORK. All materials and equipment furnished by the CONTRACTOR shall be subject to the inspection and approval of the ENGINEER. No material shall be delivered to the WORK without prior approval of the ENGINEER.

B. Within 30 days after the effective date of the Agreement, the CONTRACTOR shall submit to the ENGINEER, data relating to materials and equipment he proposes to furnish for the WORK. Such data shall be in sufficient detail to enable the ENGINEER to identify the particular product and to form an opinion as to its conformity to the specifications.

C. Facilities and labor for handling and inspection of all materials and equipment shall be furnished by the CONTRACTOR. If the ENGINEER requires, either prior to beginning or during progress of the WORK, the CONTRACTOR shall submit samples of materials for such special tests as may be necessary to demonstrate that they conform to the specifications. Such samples shall be furnished, stored, packed, and shipped as directed at the CONTRACTOR's expense. Except as otherwise noted, the CITY will make arrangements for and pay for the tests.

D. The CONTRACTOR shall submit data and samples sufficiently early to permit WORK. Any delay of approval resulting from the CONTRACTOR's failure to submit samples or data promptly shall not be used as a basis of claim against the CITY or the ENGINEER.

E. In order to demonstrate the proficiency of workmen or to facilitate the choice among several textures, types, finishes, and surfaces, the CONTRACTOR shall provide such samples of workmanship or finish as may be required.

F. The materials and equipment used on the WORK shall correspond to the approved samples or other data.

1.04 MANUFACTURER'S INSTRUCTIONS FOR INSTALLATION

A. When Contract Documents require that installation of WORK shall comply with manufacturer's printed instruction, obtain, and distribute copies of such instructions to parties involved in the installation, including copies to the ENGINEER.

1. Maintain one set of complete instructions at the job site during installation and until completion.

B. Handle, install, connect, clean, condition, and adjust products in strict accord with such instructions and in conformity with specified requirements.

1. Should job conditions or specified requirements conflict with manufacturer's instructions, consult with the ENGINEER for further instructions.
2. Do not proceed with WORK without clear instructions.

C. Perform WORK in accord with manufacturer's instructions. Do not omit any preparatory step or installation procedure unless specifically modified or exempted by Contract Documents.

1.05 TRANSPORTATION AND HANDLING

A. Arrange deliveries of Products in accord with construction schedules; coordinate to avoid conflict with WORK and conditions at the site.

1. Deliver Products in undamaged condition, in manufacturer's original containers or packaging, with identifying labels intact and legible.
2. Immediately upon delivery, inspect shipments to assure compliance with requirements of Contract Documents and approved submittals, and that Products are properly protected and undamaged.

B. Provide equipment and personnel to handle Products by methods to prevent soiling or damage to Products or packaging.

1.06 STORAGE AND PROTECTION

A. The CONTRACTOR shall furnish a covered, weather-protected storage structure, providing a clean, dry, noncorrosive environment for all mechanical equipment, valves, electrical and instrumentation equipment, and special equipment to be incorporated into this project. Storage of equipment shall be performed to allow easy access and be in strict accordance with the "instructions for storage" of each equipment supplier and manufacturer including weather/humidity protection, connection of heaters, placing of storage lubricants in equipment, blocking, or skid

storage, etc. Corroded, damaged, or deteriorated equipment and parts shall be replaced before acceptance of the project.

B. Store Products in accord with manufacturer's instructions, with seals and labels intact and legible.

1. Store products subject to damage by the elements in weather-tight enclosures.
2. Maintain temperature and humidity within the ranges required by manufacturer's instructions.
3. Store fabricated products above the ground, on blocking or skids, to prevent soiling or staining. Cover products which are subject to deterioration with impervious sheet coverings. Provide adequate ventilation to avoid condensation.
4. Store loose granular materials in a well-drained area on solid surfaces to prevent mixing with foreign matter.

C. All materials and equipment to be incorporated in the WORK shall be handled and stored by the CONTRACTOR before, during, and after shipment in a manner to prevent warping, twisting, bending, breaking, chipping, rusting, and any injury, theft or damage of any kind whatsoever to the material or equipment.

D. Cement, sand, and lime shall be stored under a roof, off the ground, and shall be kept completely dry at all times. All structural and miscellaneous steel and reinforcing steel shall be stored off the ground, or otherwise, to prevent accumulations of dirt or grease, and to minimize rusting. Brick, block, and similar masonry products shall be handled and stored in a manner to reduce breakage, chipping, cracking, and spalling to a minimum.

E. Moving parts shall be rotated a minimum of once weekly to insure proper lubrications, and to avoid metal-to-metal "welding". Upon installation of the equipment, the CONTRACTOR shall start the equipment, at least half-load, once weekly, for an adequate period of time to insure that the equipment does not deteriorate from lack of use. All materials which, in the opinion of the ENGINEER, have become so damaged as to be unfit for the use intended or specified, shall be promptly removed from the site of the WORK, and the CONTRACTOR shall receive no compensation for the damaged material or its removal.

F. Arrange storage in a manner to provide easy access for inspection. Make periodic inspections of stored Products to assure that Products are maintained under specific conditions, and free from damage or deterioration.

G. The CONTRACTOR shall be responsible for protection after installation by providing substantial coverings as necessary to protect installed products from damage from traffic and subsequent construction operations.

H. The CONTRACTOR shall be responsible for all materials, equipment, and supplies sold and delivered to the CITY under this Contract, until final inspection of the WORK and acceptance thereof by the CITY. In the event any such material, equipment, and supplies are lost, stolen, damaged, or destroyed prior to final inspection and acceptance, the CONTRACTOR shall replace same without additional cost to the CITY. Should the CONTRACTOR fail to take proper action on storage and handling of equipment supplied under this Contract within seven days after written notice to do so has been given, the CITY retains the right to correct all deficiencies

noted in previously transmitted written notice and deduct the cost associated with these corrections from the CONTRACTOR's Contract. These costs may be comprised of expenditures for labor, equipment usage, administrative, clerical, Engineering, and any other costs associated with making the necessary corrections.

I. SPECIAL TOOLS

1. Manufacturers of equipment and machinery shall furnish any special tools (including grease guns or other lubricating devices) required for normal adjustment, operations and maintenance, together with instructions for their use. The CONTRACTOR shall preserve and deliver to the CITY these tools and instructions in good order no later than upon completion of the Contract.

1.07 STORAGE AND HANDLING OF EQUIPMENT ON SITE

A. Because of the long period allowed for construction, special attention shall be given to the storage and handling of equipment on site. As a minimum, the procedure outlined below shall be followed.

1. Equipment shall not be shipped until approved by the ENGINEER. The intent of this requirement is to reduce on-site storage time prior to installation and/or operation. Under no circumstances shall equipment be delivered to the site more than one month prior to installation without written authorization from the ENGINEER, unless upon arrival it is to be stored as specified in Paragraph 1.06. Operation and maintenance data, as described in Paragraph 1.08 of Section 01730 shall be submitted to the ENGINEER for review prior to shipment of equipment.
2. All equipment having moving parts, such as gears, electric motors, etc. and/or instruments, shall be stored in a temperature and humidity controlled building approved by the ENGINEER, until such time as the equipment is to be installed.
3. All equipment shall be stored fully lubricated with oil, grease, etc. unless otherwise instructed by the manufacturer.
4. Manufacturer's storage instructions shall be carefully studied by the CONTRACTOR and reviewed with the ENGINEER by him. These instructions shall be carefully followed and a written record of this kept by the CONTRACTOR.
5. Moving parts shall be rotated a minimum of once weekly to insure proper lubrication, and to avoid metal-to-metal "welding". Upon installation of the equipment, the CONTRACTOR shall start the equipment, at least half-load, once weekly for an adequate period of time to insure that the equipment does not deteriorate from lack of use.
6. Lubricants shall be changed upon completion of installation and as frequently as required thereafter during the period between installation and acceptance. Mechanical equipment to be used in the WORK, if stored for longer than ninety (90) days, shall have the bearings cleaned, flushed, and lubricated prior to testing and start up, at no extra cost to the CITY.
7. Prior to acceptance of the equipment, the CONTRACTOR shall have the manufacturer inspect the equipment and certify that its condition has not been detrimentally affected by the long storage period. Such certifications by the manufacturer shall be deemed to mean that the equipment is judged

by the manufacturer to be in a condition equal to that of equipment that has been shipped, installed, tested, and accepted in a minimum time period. As such, the manufacturer will guarantee the equipment equally in both instances. If such a certification is not given, the equipment shall be judged to be defective. It shall be removed and replaced at the CONTRACTOR's expense.

1.08 WARRANTY

A. For all major pieces of equipment, submit a warranty from the equipment manufacturer as specified in Section 01740.

1.09 SPARE PARTS

A. Spare parts for certain equipment provided under Division 11 through 16 have been specified in the pertinent sections of the Specifications. The CONTRACTOR shall collect and store all spare parts so required in an area to be designated by the ENGINEER. In addition, the CONTRACTOR shall furnish to the ENGINEER an inventory listing all spare parts, the equipment they are associated with, the name and address of the supplier, and the delivered cost of each item. Copies of actual invoices for each item shall be furnished with the inventory to substantiate the delivered cost.

1.10 LUBRICANTS

A. During testing and prior to acceptance, the CONTRACTOR shall furnish all lubricants necessary for the proper lubrication of all equipment furnished under this Contract.

1.11 GREASE, OIL AND FUEL

A. All grease, oil, and fuel required for testing of equipment shall be furnished with the respective equipment. The CITY shall be furnished with a year's supply of required lubricants including grease and oil of the type recommended by the manufacturer with each item of the equipment supplied under Division 11 through 16.

B. The CONTRACTOR shall be responsible for changing the oil in all drives and intermediate drives of each mechanical equipment after initial break-in of the equipment, which in no event shall be any longer than three weeks of operation.

1.12 PROTECTION AGAINST ELECTROLYSIS

A. Where dissimilar metals are used in conjunction with each other, suitable insulation shall be provided between adjoining surfaces so as to eliminate direct contact and any resultant electrolysis. The insulation shall be bituminous impregnated felt, heavy bituminous coatings, nonmetallic separators or washers, or other acceptable materials.

1.13 FASTENERS

A. All necessary bolts, anchor bolts, nuts, washers, plates and bolt sleeves shall be furnished by the CONTRACTOR. Bolts shall have suitable washers and, where so required, their nuts shall be hexagonal.

B. All bolts, anchor bolts, nuts, washers, plates, and bolt sleeves shall be Type 316 stainless steel unless otherwise specifically indicated or specified.

C. Unless otherwise specified, stud, tap, and machine bolts shall be of the best quality

refined bar iron. Hexagonal nuts of the same quality of metal as the bolts shall be used.

PART 2 - PRODUCTS (NOT USED)

PART 3 - EXECUTION (NOT USED)

END OF SECTION

SECTION 01630 SUBSTITUTIONS

PART 1 - GENERAL

1.01 DESCRIPTION

A. Furnish and install products specified and named in their respective Specifications or on the DRAWINGS unless substitution is allowed.

B. For products specified only by reference standard, select product meeting that standard, by any manufacturer.

C. For products specified by naming several products or manufacturers, select any one of those products and manufacturers names which complies with their respective Specifications.

D. For products specified by naming only one or more products or manufacturers and stating "or equal", submit a request as for substitutions, for any product or manufacturer which is not specifically named.

E. Requests for any substitutions not submitted in accordance with the instructions herein will be denied.

1.02 RELATED SECTIONS

A. Section 01340 – Shop Drawings, Working Drawings and Samples

B. Other Sections as Applicable.

1.03 PRODUCTS LIST

A. Submit to ENGINEER five copies of complete list of major Products which are proposed for installation.

B. Product selection is governed by the Contract Documents and governing regulations, not by previous project experience.

1. Where a single or multiple products or manufacturers are named, provide one of the products indicated or submit a request for substitution for any product or manufacturer not named unless no substitutions are permitted.
2. Where the Specifications only require compliance with performance requirements, an imposed code, standard or regulation, select a product that complies with the requirements, standards, codes or regulations specified.
3. Manufacturers named in a Specification section are those manufacturers considered capable of manufacturing products conforming to the specified requirements. The naming of a particular manufacturer does not imply acceptance or approval of just any standard product of that manufacturer.

C. Tabulate Products by specification section number and title.

D. For products specified only by reference standards, list for each such Product:

1. Name and address of manufacturer.
2. Trade Name.
3. Model or catalog designation.
4. Manufacturer's data:
   a. Reference standards.
   b. Performance test data.

1.04 SUBSTITUTION SUBMITTAL REQUIREMENTS

A. For convenience in designation in the Contract Documents, materials to be incorporated in the WORK may be designated under a trade name or the name of a manufacturer and its catalog information. The use of alternative material which is equal in quality and of the required characteristics for the purpose intended will be permitted, subject to the following requirements:

1. The burden of proof as to the quality and suitability of such alternative equipment, products, or other materials shall be upon the CONTRACTOR.

2. The ENGINEER will be the sole judge as to the comparative quality and suitability of such alternative equipment, products, or other materials and its decisions shall be final.

3. Base Bid requirements outlined in the Bid Form.

B. The CONTRACTOR may offer any material, process, or equipment which it considers equivalent to that indicated. Unless otherwise authorized in writing by the ENGINEER, the substantiation of offers of equivalency must be submitted prior to 10 days before the bid opening date. The CONTRACTOR, at its sole expense, shall furnish data concerning items it has offered as equivalent to those specified. The CONTRACTOR shall have the material as required by the ENGINEER to determine that the quality, strength, physical, chemical, or other characteristics, including durability, finish, efficiency, dimensions, service, and suitability are such that the items will fulfill its intended function. Installation and use of a substitute item shall not be made until accepted by the ENGINEER. If a substitute offered by the CONTRACTOR is found to be not equal to the specified material, the CONTRACTOR shall furnish and install the specified material.

C. The CONTRACTOR's attention is further directed to the requirement that failure to submit data substantiating a request for the substitution of an "or equal" item within said period shall be deemed to mean that the CONTRACTOR intends to furnish one of the specific brand-named products named in the specification, and the CONTRACTOR does hereby waive all rights to offer or use substitute products in each such case. Wherever a proposed substitute product has not been submitted within said period, or wherever the submission of a proposed substitute product fails to meet the requirements of the specifications and an acceptable resubmittal is not received by the ENGINEER within said period, the CONTRACTOR shall furnish only one of the products originally-named in the Contract Documents.

D. After award of the Contract, ENGINEER will consider formal requests from the CONTRACTOR for substitution of specified products.

E. After the end of that period, the request will be considered only in case of product unavailability or other conditions beyond the control of the CONTRACTOR.

F. Submit a separate request for each substitution. Support each request with:

1. Complete data substantiating compliance of the proposed substitution with requirements stated in the Contract Documents:
   a. Product identification, including manufacturer's name and address.
   b. Manufacturer's literature; identify:
      1) Product description.
      2) Reference standards.
      3) Performance and test data.

c. Samples, as applicable.
d. Name and address of similar projects on which product has been used, and the date of each installation.

2. Itemized comparison of the proposed substitution with product specified; List significant variations.
3. Comparison of the qualities of the proposed substitution with that specified.
4. Changes required in other elements of the WORK because of the substitution.
5. Availability of maintenance service, and source of replacement materials.
6. Data relating to changes in the construction schedule.
7. Any effect of the substitution on separate contracts.
8. List of changes required in other WORK or products.
9. Accurate cost data comparing proposed substitution with product specified.
10. Designation of required license fees or royalties.
11. Designation of availability of maintenance services, and sources of replacement materials.
12. Cost data is complete and includes related costs under his Contract, but not:
    a. Cost data comparing the proposed substitution with the product specified
    b. Any required license fees or royalties
    c. ENGINEER's costs of redesign or revision of Contract Documents.
13. Substitute products shall not be ordered or installed without written acceptance of ENGINEER.

G. Do not imply or indicate substitutions on shop drawings or product data submittals without a separate formal request.

H. Only one request for substitution for each product will be considered. If not accepted, the CONTRACTOR shall provide specified product.

1.05 SUBSTITUTIONS WILL NOT BE CONSIDERED FOR ACCEPTANCE WHEN:

A. They are indicated or implied on Shop Drawings or product data submittals without a formal request from the CONTRACTOR.

B. The manufacture of the product substitution does not meet the Qualifications as stated in the specifications as determined by the ENGINEER.

C. They are requested directly by a subcontractor or supplier.

D. No data is provided relating to changes in construction schedule.

E. There is any effect of substitution on separate contracts.

F. Changes are required in other WORK or products.

G. There is no accurate cost data comparing proposed substitution with product specified.

H. There are required license fees or royalties above and beyond the specified vendor.

I. Availability of maintenance services, sources of replacement materials does not equal that provided by the specified vendor.

J. Acceptance will require substantial revision of Contract Documents.

1.06 CONTRACTOR'S REPRESENTATION

A. A request for a substitution constitutes a representation that the CONTRACTOR:

1. Has investigated proposed product and has determined that it is equal to or

superior in all respects to that specified.

2. Will provide the same warranties or bonds for substitution as for product specified.
3. Will coordinate installation of accepted substitution into the WORK, and will make such changes as may be required for the WORK to be complete in all respects.
4. Waives claims for additional costs caused by substitution which may subsequently become apparent.
5. ENGINEER DUTIES

B. Review CONTRACTOR's requests for substitutions in accordance the Shop Drawing review requirements.

C. Notify CONTRACTOR, in writing, of decision to accept or reject requested substitution.

D. The ENGINEER shall be the judge of the acceptability of the proposed substitution.

1.07 SUBSTITUTION SUBMITTAL REQUIREMENTS – "NO SUBSTITUTIONS PERMITTED"

A. CONTRACTOR may <u>not</u> request a substitute item or vendor/manufacturer for which the specifications indicate "No Substitutions Permitted".

PART 2 - PRODUCTS (NOT USED)

PART 3 - EXECUTION (NOT USED)

END OF SECTION

SECTION 01700 CONTRACT CLOSEOUT

PART 1 - GENERAL

1.01 DESCRIPTION

A. Administrative and procedural requirements for project closeout.

1. Inspection procedures.
2. Project Record Document submittal.
3. Final cleaning.

B. Warranty and bond submittal.

C. Closeout submittals, warranties, and bonds required for specific products of WORK.

1.02 RELATED SECTIONS

A. Section 01310 - Construction Schedules

B. Section 01370 - Schedule of Values

C. Section 01380 - Construction Photographs

D. Section 01710 - Cleaning

E. Section 01720 - Project Record Documents

F. Section 01740 – Warranties and Bonds

G. Other Sections as applicable.

1.03 SUBSTANTIAL COMPLETION

A. Before requesting inspection for certification of Substantial Completion, complete the following. List exceptions in the request.

1. If 100 percent completion cannot be shown, include a list of incomplete items, the value of incomplete construction, and reasons the WORK is not complete.
2. Advise CITY of pending insurance change-over requirements.
3. Submit specific warranties, workmanship bonds, maintenance agreements, final certifications, and similar documents.
4. Obtain and submit releases enabling the CITY unrestricted use of the WORK and access to services and utilities; include occupancy permits, operating certificates, and similar releases.
5. Submit record drawings, maintenance manuals, and similar final record information.
6. Complete start-up testing of systems, and instruction of the CITY's operating and maintenance personnel. Discontinue or change over and remove temporary facilities from the site, along with construction tools, mock-ups, and similar elements.

B. When the CONTRACTOR considers the WORK to be substantially complete, he shall submit a written notice to the ENGINEER that the WORK, or designated portion of the WORK, is complete and ready for inspection.

C. Within a reasonable time of receipt of a request for inspection, the ENGINEER will either proceed with inspection or advise the CONTRACTOR of unfulfilled requirements. When the ENGINEER and CITY concur that the WORK, or designated portion of the WORK, is

substantially complete, the ENGINEER will prepare the Certificate of Substantial Completion following inspection.

D. Should the ENGINEER determine that the WORK is not substantially complete, he will advise the CONTRACTOR of construction that must be completed or corrected before the certificate will be issued.

1. The ENGINEER will repeat inspection when requested and assured that the WORK has been substantially completed.
2. Results of the completed inspection will form the basis of requirements for final acceptance.

1.04 FINAL COMPLETION

A. When CONTRACTOR considers the WORK to be complete, he shall submit written certification to the ENGINEER that the WORK is completed and ready for final inspect- ion. Include the following:

1. Submit the final payment request with releases and supporting documentation not previously submitted and accepted. Include certificates of insurance for products and completed operations where required.
2. Submit an updated final statement, accounting for final additional changes to the Contract Sum.
3. Submit a certified copy of the ENGINEER's final inspection list of items to be completed or corrected, stating that each item has been completed or otherwise resolved for acceptance, the list has been endorsed and dated by the ENGINEER.
4. Submit final meter readings for utilities, a measured record of stored fuel, and similar data as of the date of Substantial Completion, or when the CITY took possession of and responsibility for corresponding elements of the WORK.
5. Submit consent of surety to final payment.
6. Submit evidence of final, continuing insurance coverage complying with insurance requirements.

B. The ENGINEER will inspect the WORK upon receipt of notice that the WORK, including inspection list items from earlier inspections, has been completed, except items whose completion has been delayed because of circumstances acceptable to the - ENGINEER.

1. Upon completion of inspection, the ENGINEER will prepare a certificate of final acceptance or advice the CONTRACTOR of WORK that is incomplete, or of obligations that have not been fulfilled but are required for final acceptance.
2. If necessary, re-inspection process will be repeated.

C. RECORD DOCUMENT SUBMITTALS (refer to Section 01720 - Project Record Documents).

PART 2 - PRODUCTS (NOT USED)

PART 3 - EXECUTION (NOT USED)

END OF SECTION

SECTION 01710 CLEANING

PART 1 - GENERAL

1.01 DESCRIPTION

A. Execute cleaning, during progress of the WORK, and at completion of the WORK, as required by General Conditions.

1.02 RELATED SECTIONS

A. Section 01010 – Summary of WORK

B. Section 01505 – Control of WORK

C. Section 01550 – Site Access and Storage

D. Other Sections as applicable.

1.03 DISPOSAL REQUIREMENTS

A. Do not dispose of any unsuitable fill, hazardous or organic material onsite. All such material shall be disposed of in a legal manner by the CONTRACTOR, the cost of which shall be included in the Bid.

B. Conduct cleaning and disposal operations to comply with applicable codes, ordinances, regulations, and anti-pollution laws.

PART 2 - PRODUCTS

2.01 MATERIALS

A. Use only those cleaning materials which will not create hazards to health or property and which will not damage surfaces.

B. Use only those cleaning materials and methods recommended by manufacturer of the surface material to be cleaned.

C. Use cleaning materials only on surfaces recommended by cleaning material manufacturer.

PART 3 - EXECUTION

3.01 DURING CONSTRUCTION

A. The CONTRACTOR shall keep the area of the WORK and other areas utilized or impacted by construction in a neat and clean condition, free from any accumulation of rubbish. The CONTRACTOR shall dispose of all rubbish and waste materials of any nature occurring at the WORK site, and shall establish regular intervals of collection and disposal of such materials and waste. The CONTRACTOR shall also keep its haul roads free from dirt, rubbish, and unnecessary obstructions resulting from its operations.

B. Disposal of all rubbish and surplus materials shall be off the site of construction in accordance with local codes and ordinances governing locations and methods of disposal, and in conformance with all applicable safety laws, and to the particular requirements of Part 1926 of the OSHA Safety and Health Standards for Construction.

C. Provide on-site containers for the collection of waste materials, debris, and rubbish as required.

3.02 DUST ABATEMENT

A. The CONTRACTOR shall furnish all labor, equipment, and means required and shall carry out effective measures wherever and as often as necessary to prevent its operation from producing dust in amounts damaging to property, cultivated vegetation, or domestic animals, or causing a nuisance to persons living in or occupying buildings in the vicinity. Means for the control of dust shall include, but not be limited to, sweeping and water trucks. The CONTRACTOR shall be responsible for any damage resulting from any dust originating from its operations. The dust abatement measures shall be continued until the CONTRACTOR is relieved of further responsibility by the ENGINEER.

3.03 FINAL CLEANING

A. Remove temporary protection and facilities installed for protection of the WORK during construction.

B. Comply with regulations of authorities having jurisdiction and safety standards for cleaning. Do not burn waste materials. Do not bury debris or excess materials on the CITY's property. Do not discharge volatile, harmful, or dangerous materials into drainage systems. Remove waste materials from the site and dispose of in a lawful manner.

C. Where extra materials of value remaining after completion of associated WORK have become the CITY's property, arrange for disposition of these materials as directed.

END OF SECTION

SECTION 01720 PROJECT RECORD DOCUMENTS

PART 1 - GENERAL

1.01 DESCRIPTION

A. This Section includes the requirements for maintaining, recording and submitting Project Record Documents including, but not limited to,

1. Record Drawings or As-Built Drawings
2. Record Specifications and other Contract Documents
3. Record Samples, Shop Drawings or Record Product Data

1.02 RELATED SECTIONS

A. Section 01050 - Field Engineering

B. Section 01340 - Shop Drawings, Working Drawings and Samples

C. Section 01700 – Project Closeout

D. Other Sections as applicable.

1.03 MAINTENANCE OF DOCUMENTS AND SAMPLES

A. Maintain at the site for the CITY and ENGINEER's review one record copy of:

1. DRAWINGS
2. Specifications
3. Addenda
4. Change Orders and other Modifications to the Contract
5. ENGINEER's Field Orders or Written Instructions
6. Approved Shop Drawings, Working Drawings, and Samples
7. Field Test Reports
8. Construction Photographs

B. Store Record Documents in the CONTRACTOR's field office apart from documents used for construction.

C. File Record Documents in accordance with the CSI format number system utilized in the Contract Documents.

D. Maintain Record Documents in a clean, dry, legible condition and in good order. Do not use Record Documents for construction purposes.

E. Make Record Documents available at all times for inspection by the ENGINEER.

F. As a prerequisite for monthly progress payments, the CONTRACTOR is to exhibit the currently updated Record Documents for review by the ENGINEER and the CITY.

1.04 RECORDING

A. Record Drawings:

1. Maintain a clean, undamaged set of prints of Contract Drawings to serve as the project Record Drawings.
2. Label each sheet "RECORD DRAWING" in neat large printed letters with red erasable pencil; use other colors to distinguish between variations in separate categories of the WORK.
3. The Record Drawings shall be presented at the same scale as the Contract Drawings.
4. The Record Drawings shall correctly and accurately show all changes from the Contract Drawings made during construction.

5. All information shall be verified and certified by an independent Professional Surveyor and Mapper registered in the State of Florida.
6. All vertical information shall be provided in the datum indicated in the Contract Drawings.
7. Horizontal and vertical locations referenced to base-line or permanent surface improvements.
8. Mark whichever drawing is most capable of showing conditions fully and accurately; where Shop Drawings are used, record a cross reference at the corresponding location on the Record Drawings.
9. Give particular attention to concealed elements that would be difficult to measure and record at a later date.
10. Mark new information that was not shown on Contract Drawings or Shop Drawings.
11. Note related Change Order numbers where applicable.
12. Organize Record Drawing sheets into manageable sets, bind with durable paper cover sheets, and print suitable titles, dates, and other identification on the cover of each set.
13. Do not use Record Drawings for construction purposes.
14. Record information concurrently with construction progress.

B. The Record Drawings shall be neat and legible including the following:

1. Above ground piping and equipment:
   a. All equipment locations, dimensions, and elevations as indicated in the Contract Drawings.
   b. All building and tank locations, dimensions, and elevations as indicated in the Contract Drawings.
   c. All above ground piping size, material, class, lengths, dimensions, and elevations as indicated in the Contract Drawings.
   d. Horizontal locations of piping, fittings, valves and appurtenances.
   e. Elevations of the top of pipe, fittings, valves and appurtenances.as indicated in the Contract Drawings and at 50' maximum increments
   f. All changes from the original design.
2. Underground pressure pipe including potable water mains sanitary sewer force mains, drainage force mains and the like:
   a. All piping size, material, class, lengths, dimensions, buried depth, and elevations as indicated in the Contract Drawings.
   b. Horizontal locations of piping, fittings, valves and appurtenances.
   c. Elevations of the top of pipe, fittings, valves, and appurtenances.
   d. Elevations as indicated in the Contract Drawings and at 50' maximum increments
   e. Lengths of restrained pipe.
   f. Water service locations.
   g. Meter sizes.
   h. All changes from the original design.
3. Gravity sanitary sewer:
   a. All piping size, material, class, lengths, slopes, dimensions, and elevations as indicated in the Contract Drawings.
   b. Horizontal locations of manholes.
   c. Rim, invert, and size of all manholes.
   d. Service terminal end locations.
   e. Wet well construction including diameter, bottom, invert, and float elevations.

f. All changes to piping from the original design.

4. Stormwater Drainage:
   a. All piping size, material, class, lengths, dimensions, and elevations as indicated in the Contract Drawings.
   b. Horizontal locations of manholes and catch basins.
   c. Rim, invert, bottom elevations, and size of all manholes and catch basins.
   d. All surface elevations indicated on the Contract Drawings including, but not limited to, swales, berms, yards, sidewalks, and the like.
   e. Horizontal location and elevation of all storm water retention or detention areas.
   f. All changes from the original design.
5. Limerock base:
   a. Upon completion of all underground utilities and limerock base, and before placement of asphalt, provide the following for ENGINEER review:
   1) Finished limerock base elevations taken at the location of finished asphalt elevations as indicated in the Contract Drawings.
   2) Additional elevations as required by the ENGINEER, including, but not limited to:
      (a) Finished limerock base at centerline, edge of median and edge of pavement.
      (b) Back of sidewalk or right of way.
      (c) Bottom of swale or flow line of gutter.
      (d) Top of curb.
      (e) High points, low points and grade breaks.
      (f) Intersections.
6. Electrical, instrumentation and controls
   a. Horizontal location of all electrical equipment and control cabinetry.
   b. Elevations of the bottom of all electrical and control panels.
   c. Horizontal location and elevation of all conduits including conduit size, route and wire size.
   d. Horizontal location of all light poles and junction boxes.
7. Miscellaneous:
   a. Horizontal location and elevation of all concrete slabs.
   b. Horizontal location, size, and material of all fencing.
   c. Location size and material of all existing utilities whether indicated on the Contract Drawings or not.
   d. Location of internal utilities and appurtenances concealed in the construction, referenced to visible and accessible features of the structure.
   e. Depths of various elements of foundation in relation to finish first floor datum.
   f. Field changes of dimensions and details.
   g. Details not on original contract drawings.

C. Record Specifications: Maintain one complete copy of the Project Manual, including addenda, and one copy of other written construction documents such as Change Orders and modifications issued in printed form during construction.
   1. Mark these documents to show substantial variations in actual WORK performed in comparison with the text of the Specifications and modifications.
   2. Give particular attention to substitutions, selection of options and similar information on elements that are concealed or cannot otherwise be readily discerned later by direct observation.

3. Note related record drawing information and Product Data.
4. Manufacturer, trade name, catalog number, and supplier of each product and item of equipment actually installed.
5. Changes made by field order or by Change Order.

D. Record Product Data (Shop Drawings): Maintain one copy of each Product Data submittal.

1. Mark these documents to show significant variations in actual WORK performed in comparison with information submitted. Include variations in products delivered to the site, and from the manufacturer's installation instructions and recommendations.
2. Give particular attention to concealed products and portions of the WORK which cannot otherwise be readily discerned later by direct observation.
3. Note related Change Orders and mark-up of record drawings and Specifications.

E. Record Sample Submitted: Immediately prior to the date or dates of Substantial Completion, the CONTRACTOR will meet at the site with the ENGINEER and the CITY to determine which of the submitted Samples that have been maintained during progress of the WORK are to be transmitted to the CITY for record purposes. Comply with delivery to the CITY's Sample storage area.

F. Miscellaneous Record Submittals: Refer to other Specification Sections for requirements of miscellaneous record-keeping and submittals in connection with actual performance of the WORK.

1.05 SUBMITTAL

A. Project Record Documents, demonstrating construction progress, shall be submitted with each Application for Payment.

B. Interim Project Record Drawings shall be submitted at significant project milestones including:

1. Construction of wet well or other structures.
2. Construction of catch basins, manholes, pipes, and appurtenances.
3. As required by the ENGINEER.

C. Project Record Documents, demonstrating construction completion shall be submitted with the balance of Closeout documents at the conclusion of construction including:

1. Three sets of signed and sealed sets of prints.
2. One compact disc copy of record drawings in AutoCAD format and PDF format.

D. Accompany submittals with transmittal letter in duplicate, containing:

1. Date
2. Project Title and Number
3. CONTRACTOR's Name and Address
4. Title and Number of each Record Document
5. Signature of CONTRACTOR or his Authorized Representative

PART 2 - PRODUCTS (NOT USED)

PART 3 - EXECUTION (NOT USED)

END OF SECTION

SECTION 01730 OPERATING AND MAINTENANCE DATA

PART 1 - GENERAL

1.01 DESCRIPTION

A. Compile product data and related information appropriate for CITY's maintenance and operation of products furnished under Contract.

1. Prepare operating and maintenance data as specified in this Section and as referenced in other pertinent sections of Specifications.

B. Instruct CITY's personnel in maintenance of products and in operation of equipment and systems.

1.02 RELATED SECTIONS

A. Section 01011 – Special Project Procedures

B. Section 01340 – Shop Drawings, Working Drawings and Samples

C. Section 01700 – Contract Closeout

D. Section 01720 – Project Record Documents

E. Section 01740 – Warranties & Bonds

F. Other Sections as applicable.

1.03 QUALITY ASSURANCE

A. Preparation of data shall be done by personnel:
1. Trained and experienced in maintenance and operation of described products.
2. Familiar with requirements of this Section.
3. Skilled as technical writers to the extent required to communicate essential data.
4. Skilled as draftsman competent to prepare required DRAWINGS.

1.04 FORM OF SUBMITTALS

A. Prepare data in form of an instructional manual for use by CITY's personnel.

B. Format

1. Size: 8 1/2 inches x 11 inches
2. Paper: 20 pound minimum, white, for typed pages.
3. Text: Manufacturer's printed data, or neatly typewritten.
4. DRAWINGS:
   a. Provide reinforced punched binder tab, bind in with text.
   b. Reduce larger drawings and fold to size of text pages, but not larger than 11 inches x 17 inches.
5. Provide fly-leaf for each separate product, or each piece of operating equipment.
   a. Provide types description of product, and major component parts of equipment.
   b. Provide indexed tabs.
6. Cover: Identify each volume with typed or printed title "OPERATING AND MAINTENANCE INSTRUCTIONS". List:
   a. Title of Project
   b. Identity of separate structure as applicable.
   c. Identity of general subject matter covered in this manual.

C. Binders

1. Commercial quality three-ring binders with durable and cleanable plastic covers.
2. Maximum ring diameter shall be 2 inches.
3. When multiple binders are used, correlate the data into related consistent groupings.

1.05 CONTENT OF MANUAL

A. Neatly typewritten Table of Contents for each volume, arranged in systematic order.

1. CONTRACTOR, name of responsible principal, address, and telephone number.
2. A list of each product required to be included, indexed to content of the volume.
3. List, with each product, name, address, and telephone number of:
   a. Subcontractor of installer
   b. Maintenance contractor, as appropriate
   c. Identify area of responsibility of each
   d. Local source of supply for parts and replacement.
4. Identify each product name and other identifying symbols as set forth in Contract Documents.

B. Product Data

1. Include only those sheets which are pertinent to the specific product.
2. Annotate each sheet to:
   a. Clearly identify specific product or part installed.
   b. Clearly identify data applicable to installation.
   c. Delete references to inapplicable information.

C. DRAWINGS

1. Supplement product date with DRAWINGS as necessary to clearly illustrate:
   a. Relations of component parts of equipment and systems.
   b. Control and flow diagrams.
2. Coordinate DRAWINGS with information in Project Record Documents to assure correct illustration of completed installation.
3. Do not use Project Record Documents as maintenance drawing.

D. Written text, as required to supplement product date for the particular installation:

1. Organize in consistent format under separate headings for different procedures.
2. Provide logical sequence of instructions of each procedure.

E. Copy of each warranty, bond, and service contract issued:

1. Provide information sheet for CITY's personnel, give:
   a. Proper procedures in event of failure.
   b. Instances which might affect validity of warranties or bonds

1.06 MANUAL FOR MATERIALS AND FINISHES

A. Submit five copies of complete manual in final form.

B. Content for architectural products, applied materials and finishes

1. Manufacturer's data, giving full information on products.
   a. Catalog number, size, and composition.
   b. Color and texture designations.

c. Information required for re-ordering special-manufactured products.

2. Instructions for care and maintenance.
   a. Manufacturer's recommendation for types of cleaning agents and methods.
   b. Cautions against cleaning agents and methods which are detrimental to product.
   c. Recommended schedule for cleaning and maintenance.

C. Content, for moisture-protection and weather-exposed products

1. Manufacturer's data, giving full information on products
   a. Applicable standards.
   b. Chemical composition.
   c. Details of installation.
2. Instructions for inspection, maintenance, and repair.

D. Additional requirements for maintenance data: Respective sections of Specifications.

E. Provide complete information for products specified.

1.07 MANUAL FOR EQUIPMENT AND SYSTEMS

A. Submit five copies of complete manual in final form.

B. Content, for each unit of equipment and system, as appropriate:

1. Description of unit and component parts.
   a. Function, normal operating characteristics and limiting conditions
   b. Performance curves, Engineering data and tests
   c. Complete nomenclature and commercial number of replaceable parts
2. Operating procedures
   a. Start-up, break-in, routine and normal operating instructions
   b. Regulation, control, stopping, shut-down and emergency instructions
   c. Summer and winter operating instructions
   d. Special operating instructions
3. Maintenance Procedures
   a. Routine operations
   b. Guide to "trouble-shooting"
   c. Disassembly, repair and reassembly
   d. Alignment, adjusting and checking
4. Servicing and lubrication schedule
   a. List of lubricants required
5. Manufacturer's printed operating and maintenance instructions
6. Description of sequence of operation by control manufacturer
7. Original manufacturer's parts list, illustrations, assembly drawings and diagrams required for maintenance
   a. Predicted list of parts subject to wear
   b. Items recommended to be stocked as spare parts
8. As-installed control diagrams by controls manufacturer
9. Each CONTRACTOR's coordination drawings
   a. As-installed color coded piping diagrams
10. Charts of valve tag numbers, with location and function of each valve
11. List of original manufacturer's spare parts, manufacturer's current prices and recommended quantities to be maintained in storage
12. Other data as required under pertinent sections of specifications

C. Contents, for each electric and electronic system, as appropriate

1. Description of system and component parts
   a. Function, normal operating characteristics, and limiting conditions
   b. Performance curves, Engineering data and tests
   c. Complete nomenclature and commercial number of replaceable parts
2. Circuit directories of panel-boards
   a. Electrical service
   b. Controls
3. As-installed color coded wiring diagrams
4. Operating procedures:
   a. Routine and normal operating instructions
   b. Sequences required
   c. Special operating instructions
5. Maintenance procedures
   a. Routine operations
   b. Guide to "trouble-shooting"
   c. Disassembly, repair and reassembly
   d. Adjustment and checking
6. Manufacturer's printed operating and maintenance instructions
7. List of original manufacturer's spare parts, manufacturer's current prices, and recommended quantities to be maintained in storage.
8. Other data as required under pertinent sections of specifications

D. Prepare and include additional data when the need for such data becomes apparent during instruction of CITY's personnel.

E. Additional requirements for operating and maintenance data: Respective sections of Specifications.

F. Provide complete information for product specified.

G. Provide factory calibration documentation.

1.08 SUBMITTAL SCHEDULE

A. Submit two copies of preliminary draft of proposed formats and outlines of contents of Operation and Maintenance Manuals within 30 days after Notice to Proceed.

1. The ENGINEER will review the preliminary draft and return one copy with comments.

B. Submit two copies of completed data in final form no later than 30 days following the ENGINEER's review of the last shop drawing and submittal specified under Section 01340.

1. One copy will be returned with comments to be incorporated into final copies.

C. Submit specified number of copies of approved data in final form directly to the offices of the ENGINEER, Hazen and Sawyer, PA, within 30 calendar days of product shipment to the project site and preferably within 30 days after the reviewed copy is received.

D. Submit six copies of addendum to the operation and maintenance manuals as applicable and certificates as specified in paragraph 1.01B of Section 01011 within 30 days after final inspection and plant start-up test.

E. Final Operation and Maintenance submittals shall be in large three-ring binders organized by specification Section and plainly marked per paragraph 1.04Ca.

1.09 INSTRUCTION OF CITY'S PERSONNEL

A. Prior to final inspection or acceptance, fully instruct CITY's designated operating and maintenance personnel in operation, adjustment, and maintenance of products, equipment, and systems.

B. Operating and maintenance manual shall constitute the basis of instruction.

1. Review contents of manual with personnel in full detail to explain all aspects of operations and maintenance.

1.10 ENGINEER'S O & M CHECKLIST

A. The ENGINEER will review Operation and Maintenance Manuals submittals on operating equipment for conformance with the requirements of this Section. The review will generally be based upon the O&M Review Checklist (presented on the pages at the end of this section for the benefit of the CONTRACTOR and his suppliers).

PART 2 - PRODUCTS (NOT USED)

PART 3 - EXECUTION (NOT USED)

O & M REVIEW CHECKLIST

EQUIPMENT SUBMITTED _____ DATE OF SUBMITTAL _____

MANUFACTURER _____ DEGREE OF APPROVAL _____

SPECIFICATION SECTION _____ DRAWING NUMBER _____

_____ Is the submittal correct for model/series/configuration originally submitted with shop drawings?

_____ Is the binding correct with assigned color/printing etc.? (Pertains to final three volumes)

_____ Is the submittal properly indexed?

_____ Does the submittal pertain only to equipment being furnished?

_____ Is the submittal easily understood and instructively arranged?

_____ Does the submittal include start-up, shutdown and troubleshooting procedures?

_____ Are sufficient DRAWINGS and schematics included to supplement written descriptions?

_____ Is the listing of name plate data for each piece of supplied equipment provided and attached?

_____ Are all submitted "C" and "D" size drawings printed on paper that is 11 inches high and folded to 8 1/2 inches wide?

_____ Is proper and complete instruction for servicing included?

_____ Is there a suggested operating log sheet for equipment?

_____ Is schedule for lubrication provided?

_____ Is there a recommended preventative maintenance schedule?

_____ Are necessary safety precautions clearly indicated where they relate to the equipment?

_____ Is the Area Representative information provided, i.e., Name, Address, Telephone Number?

_____ Are specified spare parts indicated and listed?

The following are the points of rejection requiring resubmittal by CONTRACTOR:

_____

_____

_____

END OF SECTION

SECTION 01740 WARRANTIES AND BONDS

PART 1 - GENERAL

1.01 DESCRIPTION

A. Compile warranties and bonds as specified in the Contract Documents.

B. Co-execute submittals when so specified.

C. Review submittals to verify compliance with Contract Documents.

D. Submit to the ENGINEER for review and transmittal to the CITY.

1.02 RELATED SECTIONS

A. Section 01011 - Special Project Procedures

B. Section 01700 - Contract Closeout

C. Other Sections as applicable.

1.03 SUBMITTAL REQUIREMENTS

A. Assemble warranties, bond, and service and maintenance contracts, executed by each of the respective manufacturers, suppliers, and subcontractors.

B. Number of original signed copies required: two (2) each.

C. Table of Contents: neatly typed, in orderly sequence. Provide complete information for each item.
   1. Product or work item
   2. Firm, with name of principal, address and telephone number
   3. Scope
   4. Date of beginning of Warranty, bond or service and maintenance contract
   5. Duration of warranty, bond or service maintenance contract
   6. Provide information for CITY's personnel:
      a. Proper procedure in case of failure
      b. Instances which might affect the validity of warranty or bond
   7. CONTRACTOR, name of responsible principal, address and telephone number

1.04 FORM OF SUBMITTALS

A. Prepare in duplicate packets

B. Format:
   1. Size 8 1/2 inches x 11 inches, punch sheets for standard 3-post binder
   2. Cover: Identify each packet with typed or printed title "WARRANTIES AND BONDS". List:
      a. Title of Project
      b. Name of CONTRACTOR

C. Binders: Commercial quality, three-post (3) binder, with durable and cleanable plastic covers and maximum post width of 2 inches.

1.05 WARRANTY SUBMITTAL REQUIREMENTS

A. For all equipment, submit a one-year warranty from the equipment manufacturer, unless otherwise specified. The manufacturer's warranty period shall be concurrent with the CONTRACTOR's for one year commencing at the time of acceptance by the CITY.

B. The CONTRACTOR shall be responsible for obtaining certificates for equipment warranty for all major equipment and which has a 1 HP motor or which lists for more than $1,000. The ENGINEER reserves the right to request warranties for equipment not classified as major. The CONTRACTOR shall still warrant equipment not considered to be "major" in the CONTRACTOR's one-year warranty period even though certificates of warranty may not be required.

C. In the event that the equipment manufacturer or supplier is unwilling to provide a one-year warranty commencing at the time of CITY acceptance, the CONTRACTOR shall obtain from the manufacturer a two (2) year warranty commencing at the time of equipment delivery to the job site. This two-year (2) warranty from the manufacturer shall not relieve the CONTRACTOR of the one-year warranty starting at the time of CITY acceptance of the equipment.

PART 2 - PRODUCTS (NOT USED)

PART 3 - EXECUTION (NOT USED)

END OF SECTION

SECTION 02050 DEMOLITION

PART 1 - GENERAL

1.01 WORK INCLUDED

A. Demolish designated structures.

B. Remove materials from site.

C. Remove foundations as applicable.

D. Remove designated underground tanks and piping, unless noted otherwise.

E. Disconnect, cap, remove and identify utilities as necessary to complete the WORK.

1.02 RELATED SECTIONS

A. Section 01340 – Shop Drawings, Working Drawings and Samples

B. Section 01700 - Contract Closeout

1.03 SUBMITTALS

A. Submit demolition and removal procedures and schedule under provisions of Section 01340 entitled "Shop Drawings, Product Data and Samples".

1.04 EXISTING CONDITIONS

A. Conduct demolition to minimize interference with adjacent structures.

B. Provide, erect, and maintain temporary barriers and security devices.

C. Conduct operations with minimum interference to public or private thoroughfares. Maintain protected egress and access at all times.

PART 2 - PRODUCTS (NOT USED)

PART 3 - EXECUTION

3.01 PREPARATION

A. Prevent movement or settlement of adjacent structures. Provide bracing and shoring.

B. Protect existing landscaping materials, appurtenances, structures, which are not to be demolished.

C. Disconnect, remove and cap designated utility lines within demolition areas.

D. Mark location of disconnected utilities. Identify utilities and indicate capping locations on Project Record Documents.

3.02 EXECUTION

A. Demolish indicated structures and appurtenances in an orderly and careful manner, and in accordance with staging requirements.

B. Cease operations and notify Consultant immediately if adjacent structures appear to be endangered. Do not resume operations until corrective measures have been taken.

C. Except where noted otherwise, immediately remove demolished material from site.

D. Remove materials to be re-installed or retained in manner to prevent damage. Store and protect under provisions of Section 01600 entitled "Material and Equipment".

E. Remove, store, and protect for re-installation the following materials and equipment:

1. Traffic signalization structures as designated by the CITY under separate construction drawings.
2. Aboveground utility structures designated by Florida Power and Light, Broward County, Bell South, Adelphia, other pertinent utility companies, or the CITY as indicated on the DRAWINGS.

F. Remove the following material and equipment to be retained by the CITY. Deliver to Water Treatment Plant:

1. Not Applicable

G. Remove and promptly dispose of contaminated, vermin infested, or dangerous materials encountered.

H. Do not burn or bury materials on site.

I. Remove foundation walls and footings to a minimum two feet below finished grade.

J. Remove concrete slabs on grade.

K. Pump out buried tanks located within demolition area. Fill tanks with sand or fine gravel and cover with fill; remove piping.

L. Keep WORK sprinkled to minimize dust. Provide hoses and watermain or hydrant connections for this purpose.

M. Backfill areas excavated, open pits and holes caused as a result of demolition.

N. Rough grade and compact areas affected by demolition to maintain site grades and contours.

O. Remove demolished materials from site as WORK progresses. Leave site in clean condition.

END OF SECTION

SECTION 02100 SITE PREPARATION

PART 1 - GENERAL

1.01 DESCRIPTION

A. Section covers clearing, grubbing, stripping and demucking of the construction site, complete as specified herein.

B. Clear and demuck the area within the limits of construction as required, including drainage easements.

1.02 RELATED SECTIONS

A. Section 02221 - Trenching, Bedding & Backfill for Pipe

B. Section 02513 - Asphaltic Concrete Paving

C. Other Sections as applicable.

PART 2 - PRODUCTS (NOT USED)

PART 3 - EXECUTION

3.01 CLEARING

A. The surface of the ground, for the area to be cleared and grubbed shall be completely cleared of all timber, brush, stumps, roots, grass, weeds, rubbish and all other objectionable obstructions resting on or protruding through the surface of the ground. However, those trees which are designated by the ENGINEER shall be preserved as hereinafter specified. Clearing operations shall be conducted so as to prevent damage to existing structures and installations, and to those under construction, so as to provide for the safety of employees and others. Clearing for structures shall consist of topsoil and vegetation removal. Clearing for pipelines shall consist of vegetation removal.

3.02 GRUBBING

A. Grubbing shall consist of the complete removal of all stumps, roots larger than $1^1/_2$ inches in diameter, matted roots, brush, timber, logs and any other organic or metallic debris resting on, under or protruding through the surface of the ground to a depth of 18 inches below the subgrade. All depressions excavated below the original ground surface for or by the removal of such objects, shall be refilled with suitable materials and compacted to a density conforming to the surrounding ground surface.

3.03 STRIPPING

A. In areas so designated, top soil, not muck shall be stockpiled. Topsoil stockpiled shall be protected until it is placed as specified. Any topsoil remaining after all WORK is in place shall be disposed of by the CONTRACTOR.

3.04 DEMUCKING

A. When encountered, organic material (muck) shall be excavated and removed. This material may be stockpiled temporarily, but must be disposed of as directed by the ENGINEER or the CITY. Refer to Appendix A of the Contract documents and the Contract drawings for additional direction regarding demucking.

3.05 DISPOSAL OF CLEARED AND GRUBBED MATERIAL

A. The CONTRACTOR shall dispose of all material and debris from the clearing and grubbing operation by shipping such material and debris and disposing such material to a suitable location as required by the ENGINEER or the governmental agencies. Disposal by deep burial will not be permitted. The cost of disposal of material (including hauling) shall be considered a subsidiary obligation of the CONTRACTOR, the cost of which shall be included in the contract prices.

3.06 PRESERVATION OF TREES

A. Those trees which are designated by the ENGINEER or as shown on the DRAWINGS for preservation shall be carefully protected from damage. The CONTRACTOR shall erect such barricades, guards, and enclosures as may be considered necessary by him for the protection of the trees during all construction operations.

3.07 PRESERVATION OF DEVELOPED PRIVATE PROPERTY

A. The CONTRACTOR shall exercise extreme care to avoid necessary disturbance of developed private property as applicable. Trees, shrubbery, gardens, lawn and other landscaping, which in the opinion of the ENGINEER must be removed, shall be replaced and replanted to restore the construction easement to the condition existing prior to construction.

B. All soil preparation procedures and replanting operations shall be under the supervision of nurseryman experienced in such operations.

C. Improvements to the land such as fences, walls, outbuildings, etc., which of necessity must be removed shall be replaced with equal quality materials and workmanship.

D. The CONTRACTOR shall clean up the construction site across developed private property directly after construction is complete upon approval of the ENGINEER.

3.08 PRESERVATION OF PUBLIC PROPERTY

A. The appropriate paragraphs of Articles 3.06 and 3.07, of these specifications shall apply to the preservation and restoration of all damaged areas of public lands, rights-of-way, easements, etc.

END OF SECTION

SECTION 02210 SUBSURFACE INVESTIGATION

PART 1 - GENERAL

1.01 RELATED DOCUMENTS

A. All applicable provisions of the bidding and Contract Requirements, and Division 1 - General Requirements shall govern the WORK under this section.

1.02 WORK INCLUDED

A. Provide all labor, materials, necessary equipment and services to complete the subsurface investigation WORK, as indicated on the DRAWINGS, as specified herein or both, except as for items specifically indicated as "NIC ITEMS".

B. The subsurface investigation for conditions of the project site is the sole responsibility of the CONTRACTOR. In preparing the Bid, the CONTRACTOR shall make all subsurface or surface investigations necessary to provide proper background and knowledge to determine the nature and extent of WORK required.

C. The CITY or ENGINEER will provide minimal subsurface information upon request, and makes no warranties or guarantees concerning the nature of materials to be encountered on the site.

1.03 RELATED WORK

A. Section 02230 - Site Clearing.

B. Section 02300 - Earthwork.

1.04 MEASUREMENT AND PAYMENT

A. There shall be no special measurement or payment for the WORK under this section, it shall be included in the lump sum price for bid item – Mobilization.

PART 2 - PRODUCTS (NOT USED)

PART 3 - EXECUTION (NOT USED)

END OF SECTION

SECTION 02221 TRENCHING, BEDDING, AND BACKFILL FOR PIPE

PART 1 - GENERAL

1.01 DESCRIPTION

A. Furnish labor, materials, equipment, and incidentals necessary to perform all excavation, backfill, fill, grading, and slope protection required to complete the piping work shown on the DRAWINGS and specified herein. The WORK shall include, but not necessarily be limited to, manholes, vaults, duct conduit, pipe, roadways, paving, bedding, backfilling, fill, required borrow; grading, disposal of surplus and unsuitable materials, and all related WORK such as sheeting, bracing, and dewatering

1.02 RELATED SECTIONS

A. Section 01340 – Shop Drawings, Working Drawings and Samples

B. Section 02100 - Site Preparation

C. Other Sections as applicable.

1.03 REFERENCES

A. FDOT Standard Specifications for Road and Bridge Construction

B. FDOT Design Standards

C. ASTM D2487 - Standard Practice for Classification of Soils for Engineering Purposes (Unified Soil Classification System)

D. AASHTO M-145 - Standard Specification for Classification of Soils and Soil-Aggregate Mixtures for Highway Construction Purposes

1.04 JOB CONDITIONS

A. The CONTRACTOR shall examine the site and review the available test borings or undertake his own soil borings prior to submitting his bid, taking into consideration all conditions that may affect his WORK. The CITY and ENGINEER will not assume responsibility for variations of sub-soil quality or conditions at locations other than places shown and at the time the available test borings were made.

B. Existing Utilities: Locate existing underground utilities in the areas of WORK. If utilities are to remain in place, provide adequate means of protection during earthwork operations.

1. Should uncharted, or incorrectly charted, piping or other utilities be encountered during excavation, consult the ENGINEER and the CITY of such piping or utility immediately for directions.
2. Cooperate with CITY and utility companies in keeping respective services and facilities in operation. Repair damaged utilities to satisfaction of utility owner.
3. Demolish and completely remove from site existing underground utilities indicated on the DRAWINGS to be removed.

C. Protection of Persons and Property: CONTRACTOR shall barricade open excavations occurring as part of this WORK and post with warning lights. Operate warning lights as recommended by authorities having jurisdiction.

1. Protect structures, utilities, sidewalks, pavements, and other facilities from damage caused by settlement, lateral movement, undermining, washout, and other hazards created by earthwork operations.

1.05 SUBMITTALS

A. The CONTRACTOR shall furnish the ENGINEER, for approval, a certificate of origin and compliance with specifications for any fill material obtained from off-site sources.

B. At the discretion of the ENGINEER, the CONTRACTOR shall furnish the ENGINEER, for approval, a representative sample of fill material obtained from on-site sources weighing approximately 50 pounds, at least ten calendar days prior to the date of anticipated use of such material.

C. At the discretion of the ENGINEER, for each material obtained from off-site sources, the CONTRACTOR shall notify the ENGINEER of the source of the material and shall furnish the ENGINEER, for approval, a representative sample weighing approximately 50 pounds, at least ten calendar days prior to the date of anticipated use of such material.

PART 2 - PRODUCTS

2.01 MATERIALS

A. Satisfactory Soil Materials: ASTM D2487 soil classification groups GW, GP, SW, and SP.

B. Unsatisfactory Soil Materials: ASTM D2487 soil classification groups GM, GC, SM, SC, CL, ML, OL, CH, MH, OH and PT.

C. Satisfactory and unsatisfactory soil materials for roadway embankment, including pipe trench backfill under roadways, shall meet the requirements as defined in AASHTO M-145 soil classification groups and FDOT index 505.

D. Satisfactory materials encountered during excavation, may be stored in segregated stockpiles for reuse. All material which, in the opinion of the ENGINEER, is not suitable for reuse shall be spoiled as specified herein for legal disposal, at the cost of the CONTRACTOR, as unsuitable materials.

E. Sub-base material:

1. Refer to roadway section and/or specifications.

F. Select or Structural Fill or backfill:

1. Select or structural fill material shall be a satisfactory soil material, well graded, consisting of a minimum of 60 percent clean medium fine grain sized quartz sand, free of organic, deleterious and/or compressible percent clean medium fine grain sized quartz sand, free of organic, deleterious and/or compressed material. Rock in excess of 1 inch in diameter shall not be permitted.

G. Common Fill:

1. Common fill material shall be a satisfactory soil material containing no more than 20 percent by weight finer than No. 200 mesh sieve. It shall be free from organic matter, muck, marl, and rock exceeding 2 1/2 inches in diameter.

H. Course Aggregate:

1. Course aggregate, or gravel, shall be used for rock bedding, drainage rock or as otherwise depicted in the DRAWINGS. Unless otherwise noted, course aggregate shall consist of washed and graded crushed limerock meeting FDOT specification 901, size number 57 or approved equal.

I. Sand

1. Where specified, sand, clean sand, silica sand or other nomenclature shall refer to silica sand meeting FDOT specification 902-2.

J. Satisfactory soil materials shall free of muck, clay, rock or gravel larger than 2-1/2 inches in any dimension, debris, trash, waste, frozen materials, broken concrete, masonry, rubble, vegetable or other similar materials or deleterious matter. Materials of this nature encountered during the excavation which, in the opinion of the ENGINEER, is not suitable for reuse shall be stockpiled for disposal as unsuitable materials.

K. Material substitutions may be permitted if accompanied by a geotechnical engineers report substantiating the proposed substitution which is approved by the ENGINEER and is at no cost to the CITY.

PART 3 - EXECUTION

3.01 GENERAL

A. All excavation, backfill and grading necessary to complete the WORK shall be made by the CONTRACTOR and the cost thereof shall be included in the Contract price.

B. Material shall be furnished as required from off-site sources and hauled to site.

C. The CONTRACTOR shall take all necessary precautions to maintain the WORK area in a safe and workable condition.

D. The CONTRACTOR shall protect his WORK at all times by flagging, marking, lighting and barricading. It shall also be the CONTRACTOR's responsibility to preserve and protect all above and underground structures, pipe lines, conduits, cables, drains, or utilities which are existing at the time he encounters them. Failure of the DRAWINGS to show the existence of these obstructions shall not relieve the CONTRACTOR from this responsibility. The cost of repair of damage which occurs to these obstructions during or as a result of construction shall be borne by the CONTRACTOR without additional cost to the CITY.

3.02 DEWATERING

A. The bottom of the excavations shall be firm and dry and in all respects acceptable to the ENGINEER.

B. Prevent surface water and sub-surface or ground water from flowing into excavations. Do not allow water to accumulate in excavations.

C. Provide and maintain pumps, well points, sumps, suction and discharge lines, and other dewatering system components necessary to convey water away from excavations.

D. The CONTRACTOR shall obtain all dewatering permits as required from agencies having jurisdiction

3.03 TRENCH EXCAVATION

A. Excavation for all trenches required for the installation of pipes shall be made to the depths indicated on the DRAWINGS. Excavate trench to provide minimum of 30-inch clear cover over the pipe bell unless otherwise noted on the DRAWINGS. Excavate in such manner and to such widths as will give suitable room for laying the pipe within the trenches, for bracing and supporting and for pumping and drainage facilities. The trench width at the top of the pipe shall not exceed the allowable as determined by the depth of cut and indicated on the DRAWINGS.

B. Rock shall be removed to a minimum 8-inches clearance around the bottom and sides of all the pipe or ducts being laid.

C. Where pipe is to be laid in limerock bedding or encased in concrete, the trench may be excavated by machinery to or just below the designated subgrade provided that the material remaining in the bottom of the trench remains undisturbed.

D. Where the pipes or ducts are to be laid directly on the trench bottom the lower part of the trenches shall not be excavated to the trench bottom by machinery. The last of the material being excavated shall be done manually in such a manner that will give a flat bottom true to grade so that pipe can evenly and uniformly supported along its entire length on undisturbed material or bedding rock. Bell holes shall be made as required manually so that there is no bearing surface on the bells and pipes are supported along the barrel only.

E. The bottom of the excavations shall be firm and dry and in all respects acceptable to the ENGINEER. Excavate any organic soil material from the bottom of the trench and replace with rock bedding, at least 6 inches thick.

3.04 TRENCH PROTECTION

A. The CONTRACTOR shall perform trench excavations in accordance with applicable trench safety standards and is responsible to determine any safety or safety related standards that apply to the Project. The CITY and ENGINEER are not responsible to review and/or assess safety precautions, programs and costs, and the means, methods, techniques or technique adequacy, reasonableness of cost, sequences and procedures of any safety precaution, including, but not limited to, compliance with any and all requirements of Florida Trench Safety Act.

B. The CONTRACTOR shall construct and maintain sheeting and bracing as required to support the sides of excavations, to prevent any movement which could in any way diminish the width of the excavation below that necessary for proper construction, and to protect adjacent structures, existing piping, and foundation material from disturbance, undermining, or other damage. Care shall be taken to prevent voids outside of the sheeting, but if voids form, they shall be immediately filled and compacted.

C. For pipe trench sheeting, no sheeting is to be withdrawn if driven below mid-diameter of any pipe, and no wood sheeting shall be cut off at a level lower than 1 foot above the top of any pipe unless otherwise directed by the ENGINEER. If during the progress of the WORK the ENGINEER decides that additional wood sheeting should be left in place, he may direct the CONTRACTOR in writing. If steel sheeting is used for trench sheeting, removal shall be as specified above, unless written approval is given by the ENGINEER for an alternate method of removal.

D. All sheeting and bracing not left in place, shall be carefully removed in such a manner as not to endanger the construction or other structures, utilities, existing piping, or property. All voids left or caused by withdrawal of sheeting shall immediately be refilled with sand or rammed with tools especially adapted to that purpose, by watering or otherwise as may be directed.

E. The right of the ENGINEER to order sheeting and bracing left in place shall not be construed as creating any obligation on his part to issue such orders, and his failure to exercise his right to do so shall not relieve the CONTRACTOR from liability for damages to persons or property occurring from or upon the WORK occasioned by negligence or otherwise growing out of a failure on the part of the CONTRACTOR to leave in place sufficient sheeting and bracing to prevent any caving or moving of the ground.

3.05 PIPE INTERFERENCES AND ENCASEMENT

A. The CONTRACTOR shall abide by the following schedule of criteria concerning interferences with other utilities.

1. In no case shall there be less than 0.5 feet between any two pipe lines and structures.
2. Class I Concrete Encasement: Wherever there is more than 0.5 foot, but not less than 1.5 foot clearance between water mains or water services, then a concrete encasement shall be provided in accordance with the typical detail as shown on the DRAWINGS.
3. Class II Concrete Encasement: Wherever there is more than 0.5 foot, but less than 1.0 foot clearance between any two pipe lines, or between pipe lines and structures, then a concrete encasement shall be provided in accordance with the typical detail as shown on the DRAWINGS.

B. The ENGINEER shall have full authority to direct the placement of the various pipes and structures in order to facilitate construction, expedite completion and to avoid conflicts.

3.06 BACKFILLING

A. Do not backfill trenches until tests and inspections have been made and backfilling authorized by the ENGINEER.

B. Perform backfill in lifts and compact as specified in the DRAWINGS.

C. Backfilling over pipes shall begin as soon as practical after the pipe has been laid, jointed, and inspected and the trench filled with suitable compacted material to the mid-diameter of the pipe.

D. Backfilling over ducts shall begin not less than three days after placing concrete encasement.

E. All backfilling shall be prosecuted expeditiously as detailed on the DRAWINGS.

F. Any space remaining between the pipe and sides of the trench shall be packed full by hand shovel with selected earth and thoroughly compacted with a tamper as fast as placed, up to a level of one foot above the top of pipe.

G. The filling shall be carried up evenly on both sides with at least one man tamping for each man shoveling material into the trench.

H. The CONTRACTOR shall take all precautions necessary to maintain the bedding in a compacted state and to prevent washing, erosion or loosening of this bed.

I. In areas where unsuitable soil is discovered in the pipe bedding, the unsuitable soil shall be removed and stockpiled for disposal by the CONTRACTOR. Suitable soils shall be substituted at a depth as directed by the ENGINEER. If gravel is required by the ENGINEER as suitable bedding, the gravel shall be wrapped in filter fabric prior to backfill operations.

J. Gravel bedding shall not be used under any circumstances as a drain for ground water.

K. In locations where pipes pass through building walls, the CONTRACTOR shall take the following precautions to consolidate the refill up to an elevation of at least 1 foot above the bottom of the pipes:

1. Place structural fill in such areas for a distance of not less than 3 feet either side of the centerline of the pipe in level layers not exceeding 6-inches in depth.

2. Wet each layer to the extent directed and thoroughly compact each layer with a power tamper to the satisfaction of the ENGINEER.

3.07 COMPACTION

A. Perform compaction and compaction tests as specified in the DRAWINGS.

B. Hydraulic compaction shall be permitted if accompanied by a geotechnical engineers report substantiating the proposed methods. The geotechnical engineers report shall be submitted to the ENGINEER prior to any WORK and shall be at no cost to the CITY.

3.08 GRADING

A. Grading shall be performed at such places as are indicated on the DRAWINGS, to the lines, grades and elevations shown or as directed by the ENGINEER and shall be made in such manner that the requirements for formation of embankments can be followed. All unacceptable material encountered, of whatever nature within the limits indicated, shall be removed and disposed of as directed. During the process of excavation, the grade shall be maintained in such condition that it will be well drained at all times. When directed, temporary drains and drainage ditches shall be installed to intercept or divert surface water which may affect the prosecution or condition of the WORK.

B. If at the time of excavation it is not possible to place any material in its proper section of the permanent structure, it shall be stockpiled in approved areas for later use. No extras will be considered for the stockpiling or double handling of excavated material.

C. The right is reserved to make minute adjustments or revisions in lines or grades if found necessary as the WORK progresses, due to discrepancies on the DRAWINGS or in order to obtain satisfactory construction.

D. Stones or rock fragments larger than 2 1/2 inches in their greatest dimensions will not be permitted in the top 6 inches of the subgrade line of all fills or embankments.

E. All fill slopes shall be uniformly dressed to the slope, cross-section and alignment shown on the DRAWINGS, or as directed by the ENGINEER.

F. In cut, all loose or protruding rocks on the back slopes shall be barred loose or otherwise removed to line or finished grade of slope. All cut and fill slopes shall be uniformly dressed to the slope, cross-section and alignment shown on the DRAWINGS or as specified by the ENGINEER.

G. No grading is to be done in areas where there are existing pipe lines that may be uncovered or damaged until such lines which must be maintained are relocated, or where lines are to be abandoned, all required valves are closed and drains plugged at manholes.

H. The CONTRACTOR shall replace all pavement cut or otherwise damaged during the progress of the WORK as specified elsewhere herein or as shown on the DRAWINGS.

3.09 DISPOSAL OF UNSUITABLE AND SURPLUS MATERIAL

A. All surplus and unsuitable excavated material shall be disposed of at the CONTRACTOR's cost in one of the following ways as directed by the ENGINEER.

1. Transport to soil storage area on CITY's property and stockpile or spread as directed by the ENGINEER.
2. Transport from CITY's property and legally dispose of. Any permit required for the hauling and disposing of this material beyond CITY's property shall be obtained prior to commencing hauling operations. Copies of all required permits shall be provided to the ENGINEER.

B. Suitable excavated material may be used for fill if it meets the specifications for common fill and is approved by the ENGINEER. Excavated material so approved may be neatly stockpiled at the site where designated by the ENGINEER provided there is an area available where it will not interfere with the operation of the facility nor inconvenience traffic or adjoining property owners.

END OF SECTION

SECTION 02240 DEWATERING

PART 1 - GENERAL (NOT USED)

PART 2 - PRODUCTS (NOT USED)

PART 3 - EXECUTION

3.01 GENERAL

A. The CONTRACTOR shall be responsible for design, permitting, installation, and operation of a dewatering system to dewater specified excavations.

1. The dewatering system shall be designed in accordance with the Best Management Practices (BMP's) adopted by FDEP.

2. Inspection and control of dewatering system operations will be in accordance with the FDEP guidelines established in the Florida Erosion and Sediment Control Inspector's Manual (current edition).

B. Continuously manage and control excavation water recharge in order to facilitate and not impede construction activities at all times, including weekends, holidays, and during periods of work stoppages, and furnish and install, and operate, a contingency backup dewatering system to maintain control of excavation water levels to facilitate construction (i.e.; no construction delays).

3.02 SUBMITTALS

A. Provide name, address, and phone numbers of all subcontractors.

B. The CONTRACTOR shall submit a Dewatering Best Management Practices (BMP) Plan prior to the start of excavation expected to include dewatering operations. The Plan shall provide detailed descriptions of dewatering procedures to be utilized to meet the requirements of this Section. Methodologies to control dewatering discharge contamination include, but are not limited to:

1. Holding tanks of adequate size and volume.
2. Well point systems.
3. Sump pumping systems.
4. Chemical precipitation of particulates.
5. Filter systems and siltation controls.
6. Outfall booms.

C. The CONTRACTOR shall provide a Site Health and Safety Plan and Activity Hazard Analysis (AHA) for contaminated soil as specified in Section 02250, Affected Soil and Liquid Disposal, and/or groundwater as specified in this Section, to include the following:

1. A written description of the proposed method for temporary stockpiling, transportation, and disposal of all wastes.
2. Copy of permits of disposal facilities.
3. Certification of disposal of all wastes.
4. Directions to the nearest hospital and phone number.
5. Emergency contact phone numbers.
6. Laboratory analyses and sampling plan required for transportation and disposal of all wastes in accordance with applicable federal, state, and local requirements.

D. Upon Completion of Remediation Activities, the Following shall be Provided:

1. Copy of manifests for all wastes leaving the site.
2. Copy of the laboratory analyses results from all sampling activities.
3. Copy of closure reports that may be required.

3.03 SURFACE WATER CONTROL

A. Remove surface runoff controls when no longer needed.

B. Seal off or berm catch basins in the area of construction to prevent discharge of untreated dewatering effluent or runoff from unstabilized construction areas into storm drains.

C. All drain inlets or catch basins used for dewatering discharge shall be provided with silt and sediment removal barriers as approved by the ENGINEER.

1. All barriers shall be cleaned regularly to avoid sediment discharge into the storm drain system.
2. Construction activities will be stopped at no cost to the CITY until sediment controls are properly maintained, installed, and in compliance with the dewatering permit.
3. All barriers shall be removed upon issuance of a hurricane warning.

3.04 DEWATERING SYSTEMS

A. Design, permit, furnish, and install, operate, and maintain a dewatering system of sufficient size and capacity to permit excavation and subsequent construction activities in water-free conditions, and to lower and maintain the excavation area groundwater level a minimum of 2 feet below the lowest point of excavation. The dewatering system shall be designed and operated such that the system continuously maintains excavations water levels so as to maintain the excavation water level in order to allow for the initiation and completion of excavation backfill compaction and restoration activities.

B. Dewatering systems shall include, but is not limited to, furnishing and installing wells or well points, and or other equipment and appurtenances as may be necessary, including system components or equipment, installed outside the outermost perimeter of the excavation limits, and sufficiently below lowest point of excavation, to maintain the specified or required groundwater elevation.

C. Open trench pumping maybe permitted upon the approval of the ENGINEER.

D. Design and Operate Dewatering Systems:

1. To prevent loss of ground as water is removed.
2. To avoid inducing settlement or damage to existing facilities, completed WORK, or adjacent property.
3. Avoid surface water pollution or discharge of sediment to storm drain systems or waterways.

E. Provide supplemental ditches and sumps only as necessary to collect water from local seeps. Do not use ditches and sumps as primary means of dewatering. The CONTRACTOR shall not direct any flow of water over pavement surfaces. Discharge of water shall be conducted as approved by the local, state, and federal agencies and the ENGINEER.

F. Provide controls to prevent surface water from entering excavation pits, trenches, or stockpiled materials.

3.05 PIPELINES CONSTRUCTED UNDER WATER

A. In the event that it is found that the water in a trench cannot be lowered by ordinary means, i.e., well points and pumps, an alternate construction method may be proposed by the CONTRACTOR. Complete details, specifications, manufacturer's descriptive literature, installation lists, and any other pertinent data regarding the proposed alternate method shall be submitted as an alternate by the CONTRACTOR to the ENGINEER within 5 calendar days of the time that the CONTRACTOR anticipates using such alternate method.

B. If the ENGINEER approves the alternate method in writing, it may be used, so long as the WORK is performed in a manner which, in the opinion of the ENGINEER, conforms to the method and procedure as set forth in the information supplied by the CONTRACTOR in his original application for use of an alternate method. The ENGINEER may revoke approval of the alternate method if at any time, in his opinion, the WORK is not conforming to any applicable portion of these Specifications.

C. No pipeline shall be laid under water without approval of the ENGINEER.

D. If the dewatering system is eliminated or the effort reduced, and the pipe is laid underwater, additional pipe zone material will be required as backfill to the water table elevation, or to the level it was reduced to.

3.06 DISPOSAL OF WATER

A. All water generated, pumped, or removed from excavations as a result of excavation dewatering activities shall be collected, containerized, and managed prior to discharge and or treatment at an approved discharge point or facility, in accordance with Broward County Code of Regulation, Sections 27-27, 27-193(a), 27-193(b)(3)a and 27-196. The CONTRACTOR shall secure, obtain, and pay for all necessary local, state, and federal permits, licenses, fees, and or approvals to discharge water or perform onsite or offsite treatment and disposal. Treat water collected by dewatering operations as required by regulatory agencies, prior to discharge.

B. Discharge water as permitted, and in regulatory compliance with the CONTRACTOR obtained discharge permits/licenses.

1. All discharge activities shall be performed so as to prevent silt and sediment discharge and eliminate any soil erosion or flooding, or otherwise damage existing facilities, completed WORK, or adjacent property.
2. Maximum allowable turbidity of discharges to surface waters or storm drains will be 10 NTU's.
3. Sump discharges cannot be discharged directly to storm drains or surface waters without treatment.

C. Affected storm sewer outfalls shall be protected with floating silt booms as approved by the Broward County Department of Environmental Planning and Protection (BCDPEP) and the ENGINEER. All accumulated debris resulting from the dewatering discharge collecting in the boom shall be removed on a daily basis.

D. Visible silt plumes emanating from the area around the outfalls will be considered a failure of the silt and sediment removal measures and may result in a Notice of Violation issued by BCDPEP. The CONTRACTOR will be responsible for all fines associated with the violation of the dewatering permit conditions issued to the CONTRACTOR.

E. Failure to control dewatering discharges as described above and as detailed in the Florida

Erosion and Sediment Control Inspector's Manual, may result in an order to cease dewatering operations until the discharge problems are corrected. No claims will be accepted for costs or delays associated with unacceptable dewatering discharge practices.

3.07 WELL POINT REMOVAL

A. Well point holes shall be filled with sand which shall be washed into the hole.

B. Well point holes located within asphalt pavement surfaces or concrete pavements, shall be filled with sand to the subgrade. The remaining hole shall be filled with non-shrink grout.

3.08 CONTAMINATED GROUNDWATER AND DISPOSAL REQUIREMENTS

A. If the CONTRACTOR suspects, witnesses, or identifies groundwater contamination at any time during the performance of the WORK, the CONTRACTOR shall notify the ENGINEER immediately. The CONTRACTOR shall be responsible for sample collection and laboratory analysis.

B. If analytical testing (by CONTRACTOR) documents and indicates elevated concentrations above FDEP action levels (Chapter 62-777, Florida Administrative Code) dewatering operations will be suspended until appropriate treatment and or construction measures can be implemented. The CONTRACTOR shall not resume operations until notified to do so in writing by Broward County. There shall be no delay or mobilization claim. In addition, the local agency will be immediately notified via telephone and in writing by the ENGINEER. Dewatering activities in the area will not proceed until review of the matter with the local agency is resolved and written authorization is issued.

C. Treatment of the groundwater will include three options depending on the magnitude of the contamination in the trench or as determined by the CONTRACTOR in conjunction with Broward County: Granular Activated Carbon (GAC) Treatment Vessels**,** Mobile Air Stripping Units, or Vacuum Truck Removal and Disposal or other method as approved by the County. The CONTRACTOR will provide a submittal list of all qualified groundwater remediation subcontractors for GAC vessel treatment/portable air stripping unit and vacuum truck disposal including phone numbers, contact names, and addresses prior to start of construction. The selected groundwater treatment/recycling facility for hauling contaminated groundwater shall also be identified.

D. If contaminated groundwater in the dewatering trench is encountered, the remediation operations will begin once local agency approval is obtained.

E. Effluent water from the treatment system will be analyzed by the CONTRACTOR to confirm that concentrations are below regulatory limits.

F. A Dewatering Plan describing the dewatering approach, groundwater monitoring, and remediation alternative shall be provided by the CONTRACTOR.

END OF SECTION

SECTION 02250 AFFECTED SOIL AND LIQUID DISPOSAL

PART 1 - GENERAL

1.1 WORK INCLUDED

A. This Section covers the WORK necessary to remove, transport, and properly dispose of the following wastes:

1. Liquid petroleum product.
2. Affected soil.
3. Free petroleum product.

1.2 DEFINITIONS

A. Liquid petroleum product (product) is fluid petroleum product partly or entirely composed of diesel fuel or gasoline.

B. Affected soil is defined herein.

C. Free petroleum product is defined as a liquid which forms a separate floating phase distinct from the groundwater.

1.3 SUBMITTALS

A. The CONTRACTOR Shall Provide the Following Submittals:

1. A written description of the proposed method for temporary stockpiling, transportation, and disposal of all wastes.
2. Copy of permits of disposal facilities.
3. Certification of disposal of all wastes.
4. Copy of manifests for all wastes leaving the site.
5. Copy of the laboratory analyses required for transportation and disposal of all wastes in accordance with applicable federal, state, and local requirements.
6. Provide name, address, and phone number of all subcontractors.

PART 2 - PRODUCTS (NOT USED)

PART 3 - EXECUTION

3.1 LIQUID PETROLEUM PRODUCT

A. Classification of liquid petroleum product shall be made by the ENGINEER.

B. The CONTRACTOR shall remove all liquid petroleum product if discovered in the trench during dewatering operations.

C. If the petroleum product is discovered, the product will be disposed as described herein.

D. If contamination is discovered and it is determined that it must be removed, the CONTRACTOR shall commence remediation activities as determined by the County. There shall be no delay or mobilization claim associated.

3.2 AFFECTED SOIL

A. The soil may be contaminated with petroleum product which may be partly or entirely diesel fuel, gasoline, or chlorinated solvents.

B. Classification of affected soil for disposal purposes will be determined by the CONTRACTOR using an Organic Vapor Monitor (OVM) with photo ionization detector or equivalent. Soils with vapor readings higher than 10 parts per million (ppm) for diesel as defined in Chapter 62-770 of the Florida Administrative Code, are excessively contaminated and will be identified by the CONTRACTOR for treatment and disposal. Affected soil must be placed on an impermeable barrier when temporarily stockpiled. All stockpile leachate or runoff must be collected for disposal in accordance with applicable federal, state, and local regulations. Soils designated for removal and disposal shall be prepared for shipment, transported, and disposed of in accordance with the requirements of this Section.

C. Affected soils shall be transported and disposed of in accordance with federal, state, and local regulations. The CONTRACTOR shall be responsible for all soil analyses required for transportation and disposal. It shall be the responsibility of the CONTRACTOR to provide the manifests for the proper disposal of the contaminated material, and provide copies to the ENGINEER.

3.3 FREE PETROLEUM PRODUCT

A. Some free petroleum products which may be partly or entirely diesel fuel or gasoline may be encountered during excavation activities. The CONTRACTOR shall remove free petroleum product, if necessary, when a separate floating phase greater than 0.10-inch thick is present as required by health and safety considerations. The free petroleum product shall be removed by skimming, pumping to an oil/water separator, or other approved methods.

B. Free petroleum products shall be transported and disposed by the CONTRACTOR in accordance with federal, state, and local regulations. The CONTRACTOR is responsible for any laboratory analyses required for disposal of the free petroleum products.

3.4 TRANSPORT AND DISPOSAL

A. Transport Regulations: The CONTRACTOR shall be responsible for the loading, labeling, placarding, marking, weighing, and transporting of all waste materials in accordance with the Florida Department of Transportation Regulations, and U.S. Department of Transportation Regulations. The CONTRACTOR shall use only transporters that are licensed and competent to haul these wastes.

3.5 WASTE CONTAINERS

A. Each transport container of waste shall be visually inspected by the CONTRACTOR for leaks, drips, or container damage prior to being loaded. Containers which are found to be leaking or damaged shall not be loaded until the damage is repaired. The CONTRACTOR shall prepare the transport container to prevent spillage or contamination. The CONTRACTOR shall notify the ENGINEER 2 hours before any loaded transport leaves the site.

B. All transport containers leaving the site shall be inspected by the CONTRACTOR to ensure that no waste material adheres to the wheels or undercarriage.

C. All vehicles on which waste is adhering shall be cleaned by sweeping tires and undercarriage or by other dry methods prior to leaving the site.

3.6 SHIPPING RECORDS

A. The CONTRACTOR shall prepare accurate shipping records for any wastes leaving the site in accordance with applicable federal and state regulations. The CONTRACTOR shall be responsible for providing copies of the records to the ENGINEER and shall immediately

notify the ENGINEER of any problems in completing shipments and disposal of wastes.

1. The CONTRACTOR shall: Be responsible for appropriate measurement of unit quantity (weight or volume) of waste material removed from the site.
2. Coordinate vehicle inspection and recording of quantities leaving the site with the ENGINEER. These quantities shall be compared to recorded quantities received at the treatment or disposal facilities. The CONTRACTOR shall resolve any discrepancies occurring immediately, determining the probable cause for the discrepancy.
3. Be solely responsible for any and all actions necessary to remedy situations involving waste spiked in transit.

B. The CONTRACTOR shall ensure that a copy of the manifest is returned to the ENGINEER by the designated treatment or disposal facility within 14 days of receipt of the material to be disposed.

3.7 COORDINATION

A. The CONTRACTOR shall at any time provide the ENGINEER with safe access to the WORK whenever it is in preparation or progress for the purposes of conducting inspections or collecting samples. The CONTRACTOR may conduct concurrent sampling and analyses, if desired. Results of any such sampling and analysis shall be furnished to the ENGINEER at no cost.

PART 4 - PAYMENT

4.1 GENERAL

A. Payment for WORK in this Section shall be included in the General Conditions, Bid Item No. 1. The CONTRACTOR shall be responsible for appropriate measurement of unit quantity (volume or weight) of waste material removed from the site, and for verification of those quantities with receipt records from the disposal site.

END OF SECTION

SECTION 02276 STORMWATER POLLUTION PREVENTION

PART 1 - GENERAL

1.01 DESCRIPTION

A. Implementation of a Stormwater Pollution Prevention Plan as required by law and specified herein.

B. Permitting as required through the Florida Department of Environmental Protection (FDEP) - Florida's National Pollutant Discharge Elimination System (NPDES) program for construction activities.

C. Designing, providing, maintaining, and removing temporary erosion and sedimentation controls and/or Best Management Practices as necessary.

D. Temporary erosion controls may include, but are not limited to, mulching, netting, and watering, on site surfaces and spoil and borrow area surfaces and providing interceptor ditches at ends of berms and at those locations that will ensure erosion during construction will be either eliminated or maintained within acceptable limits as established by the CITY.

E. Temporary sedimentation controls include, but are not limited to, silt dams, traps, barriers, booms/curtains, and appurtenances at the foot of sloped surfaces and other areas that will ensure sedimentation pollution will be either eliminated or maintained within acceptable limits as established by the CITY.

1.02 RELATED SECTIONS

A. Section 01010 – Summary of Work

B. Section 01015 – General Requirements

C. Section 01030 – Special Project Procedures

D. Other Sections as applicable.

1.03 REQUIREMENTS

E. Obtain a Generic Permit for Stormwater Discharge from Large and Small Construction Activities (CGP). From the Florida Department of Environmental Protection (FDEP) for all construction disturbances in size greater than one (1) acre.

1. Disturbance includes clearing, grading, and excavating.
2. Projects which disturb less than one (1) acre will not require a CGP but will require the appropriate Best Management Practices and directed by the CITY, ENGINEER or governing authorities.

F. Implement and maintain a Stormwater Pollution Prevention Plan (SWPPP).

1. The CONTRACTOR is the entity that owns and operates the project and has authority to ensure compliance and is therefore considered the "Operator".
2. Neither the CITY nor the ENGINEER is responsible to specify, implement, or maintain the SWPPP plan.

G. Submit a CGP Notice of Intent (NOI) and the commencement of Construction.

H. Submit reporting forms throughout the duration of Construction.

I. Submit a CGP Notice of Termination (NOT) to discontinue permit coverage. An NOT may be submitted only when the site meets the eligibility requirements for termination specified in the CGP.

J. For additional information on the NPDES Stormwater Program including all regulations and forms cited in the brochure visit: www.dep.state.fl.us/water/stormwater/npdes/.

PART 2 - PRODUCTS

2.01 EROSION CONTROL

A. Mulch: FDOT type per Section 981-3.2, Green Mulch

B. Netting: Fabricated of material acceptable to the CITY.

2.02 SEDIMENTATION CONTROL

A. Bales: Clean, seed free cereal hay type

B. Netting: Fabricated of material acceptable to the CITY

C. Filter stone: Crushed stone conforming to Florida Department of Transportation specifications.

PART 3 - EXECUTION

3.01 EROSION CONTROL

A. Minimum procedures for mulching and netting are:

1. Apply mulch loosely to a thickness of between 3/4 inch and 1 1/2 inches.
2. Apply netting over mulched areas on sloped surfaces.

3.02 SEDIMENTATION CONTROL

A. Install and maintain silt dams, traps and barriers, and booms/curtains as shown on the approved schedule. Hay bales and fabric that deteriorates and filter stone that becomes dislodged shall be replaced as required.

3.03 PERFORMANCE

A. Should any of the temporary erosion and sediment control measures employed by the CONTRACTOR fail to produce results that comply with the requirements of the CITY, CONTRACTOR shall immediately take any and all necessary steps to correct the deficiency at his own expense.

END OF SECTION

SECTION 02300 EARTHWORK

PART 1 - GENERAL

1.01 RELATED DOCUMENTS

A. All applicable provisions of the Bidding and Contract Requirements, and Division 1 - General Requirements shall govern the WORK under this Section.

1.02 WORK INCLUDED

A. Provide all labor, materials, necessary equipment and services to complete the Earthwork, as indicated on the DRAWINGS, as specified herein or both, except as for items specifically indicated as "NIC ITEMS".

B. Including but not necessarily limited to the following:
   1. Excavation, including demucking.
   2. Backfilling.
   3. Filling.
   4. Grading, general site and building pads.
   5. Compaction.
   6. Coordination with ENGINEER for offsite disposal of all excess materials and stock piling of suitable materials to be used as fill or backfill.

C. Cutting, proof rolling, filling and grading to required lines, dimensions, contours and elevations for proposed improvements as shown and implied on the DRAWINGS and required by these specifications.

D. Scarifying, compaction, moisture content conditioning and control, and removal of unsuitable material to ensure proper preparation of areas for the proposed improvements.

E. Undertake any special construction procedures for the site recommended in the geotechnical report for preparation of building and pavement areas.

F. There shall be no classification of excavation for measurement of payment regardless of materials encountered.

G. The WORK of this Section includes all earthwork required for construction of the WORK. Such earthwork shall include, but not be limited to, the loosening, removing, loading, transporting, depositing, and compacting in its final location of all materials wet and dry, as required for the purposes of completing the WORK specified in the Contract Documents, which shall include, but not be limited to, the furnishing, placing, and removing of sheeting and bracing necessary to safely support the sides of all excavation; all pumping, ditching, draining, and other required measures for the removal or exclusion of water from the excavation; the supporting of structures above and below the ground; all backfilling around structures and all backfilling of trenches and pits; the disposal of excess excavated materials; borrow of materials to makeup deficiencies for fills; and all other incidental earthwork, all in accordance with the requirement of the Contract Documents.

1.03 RELATED WORK

A. Section 02310 - Site Grading.

B. All applicable sections of Technical Specifications.

1.04 REFERENCE SPECIFICATIONS, CODES, AND STANDARDS

A. Codes: All codes, as referenced herein, are specified in Section 01420, "Reference Standards".

B. American Society for Testing and Materials (ASTM) – latest edition

1. ASTM D 422 - Method for Particle-Size Analysis of Soils.
2. ASTM D 698 - Test Methods for Moisture-Density Relations of Soils and Soil-Aggregate Mixtures, using 5.5-lb (2.49-kg) Rammer and 12-in (304.8- mm) Drop.
3. ASTM D 1556 - Test Method for Density of Soil in Place by the Sand Cone Method.
4. ASTM D 1557 - Test Methods for Moisture-Density Relations of Soils and Soil Aggregate Mixtures Using 10-lb (4.54-kg) Rammer and 18-in (457- mm) Drop.
5. ASTM D 1633 - Test Method for Compressive Strength of Molded Soil-Cement Cylinders.
6. ASTM D 2216 - Laboratory Determination of Moisture content of Soil.
7. ASTM D 2419 - Test Method for Sand Equivalent Value of Soils and Fine Aggregate.
8. ASTM D 2487 - Classification of Soils for Engineering Purposes.
9. ASTM D 2901 - Test Method for Cement Content of Freshly-Mixed Soil-Cement.
10. ASTM D 2922 - Test Methods for Density of Soil and Soil-Aggregate in Place by Nuclear Methods (Shallow Depth).
11. ASTM D 3017 - Test for Water Content of Soil and Soil-Aggregate in Place by Nuclear Methods (Shallow Depth)
12. ASTM D 4253 - Test Methods for Maximum Index Density of Soils Using a Vibratory Table.
13. ASTM D 4254 - Test Methods for Minimum Index Density of Soils and Calculation of Relative Density.
14. ASTM D 4318 - Test for Plastic Limit, Liquid Limit, and Plasticity Index of Soils
15. ASTM D 4429 - Standard Test Method for CBR (California Bearing Ratio) of Soils in Place

C. American Association of State Highway and Transportation Officials (AASHTO) - latest edition

1. T 88 Particle Size Analysis of Soils

1.05 SUBSOIL INFORMATION

A. Refer to Section 02210 - Subsurface Investigation.

1.06 SITE INSPECTION

A. The CONTRACTOR shall visit the site and acquaint themselves with all existing conditions. Make their own subsurface investigation to satisfy themselves as to site and subsurface conditions, but such subsurface investigations shall be performed only under time schedules and arrangements approved in advance by the CITY and ENGINEER.

1.07 TOPOGRAPHIC INFORMATION

A. The existing grades shown on the DRAWINGS are approximate only and no representation is made as to their accuracy or consistency. The CONTRACTOR shall verify all existing grades to the extent necessary to insure completion of the job to the proposed grades indicated on the DRAWINGS.

1.08 DISPOSAL OF SURPLUS OR UNSUITABLE MATERIAL

A. Unsuitable material encountered during the course of construction shall be removed from the construction site at the expense of the CONTRACTOR. Unsuitable material shall not be stockpiled on-site. All suitable material shall be stockpiled at areas approved by the ENGINEER.

1.09 BENCHMARKS AND MONUMENTS

A. CONTRACTOR shall employ a registered Professional Surveyor and Mapper to lay out lines and grades as indicated. Benchmarks shall be established by a Professional Surveyor and Mapper registered in the State of Florida. Benchmarks shall be permanent and easily accessible and maintained and replaced if disturbed or destroyed. All benchmarks shall be North American Vertical Datum 1988 (NAVD).

1.10 UTILITIES

A. Before starting site operations, disconnect or arrange for the disconnection of all utility services designated to be removed.

B. Locate all existing active utility lines traversing the site and determine the requirements for their protection. Preserve in operating condition all active utilities adjacent to or traversing the site and/or designated to remain.

C. Observe rules and regulations governing respective utilities in working under requirements of this section. Adequately protect utilities from damage, remove or replace as indicated, specified or required. Remove, plug or cap inactive or abandoned utilities encountered in excavation. Record location of all utilities.

1.11 QUALITY ASSURANCE

A. A geotechnical engineer may be retained by the CITY to observe performance of WORK in connection with excavating, filling, grading, and compaction. This inspection will not relieve the CONTRACTOR from responsibility to complete the WORK in accordance with the DRAWINGS and specifications. The CONTRACTOR shall re-adjust all WORK performed that does not meet technical or design requirements but make no deviations from the Contract documents without specific and written acceptance of the ENGINEER.

B. Visual field confirmation and density testing of subgrade preparation and fill placement procedures shall be performed by the field geotechnical engineer as part of the construction testing requirements. The CONTRACTOR shall be informed as soon as possible of the test results.

C. The ENGINEER shall prepare field reports that indicate compaction test location, elevation data, testing results and acceptability. The CITY and CONTRACTOR shall be provided with written copies of the results within 24 hours of time test was performed.

D. All costs related to reinspection, due to failures, shall be paid for by the CONTRACTOR at no additional expense to the CITY. The CITY reserves the right to direct any inspection that is deemed necessary. CONTRACTOR shall provide free access to site for inspection activities.

E. Where soil material is required to be compacted to a percentage of maximum density, the maximum density at optimum moisture content will be determined in accordance with ASTM D 1557. Where cohesionless, free draining soil material is required to be compacted to a percentage of relative density, the calculation of relative density will be determined in accordance with ASTM D 4253 and D 4254. Field density in-place tests will be performed in accordance with ASTM D 1556, ASTM D 2922, or by such other means acceptable to the ENGINEER.

F. In case the tests of the fill or backfill show non-compliance with the required density, the CONTRACTOR shall accomplish such remedy as may be required to insure compliance. Subsequent testing to show compliance shall be by a testing laboratory selected by the CITY and shall be at the CONTRACTOR's expense.

G. Particle size analysis of soils and aggregates will be performed using ASTM D 422.

H. Determination of sand equivalent value will be performed using ASTM D 2419.

I. Unified Soil Classification System: References in these specifications are to soil classification types and standards set forth in ASTM D 2487. The CONTRACTOR shall be bound by all applicable provisions of said ASTM D 2487 in the interpretation of soil classifications.

J. Comply with requirements of all applicable building codes and other public agencies having jurisdiction upon the WORK.

1.12 SUBMITTALS

A. Within 10 days after award of the contract, the CONTRACTOR shall submit to the CITY, a schedule detailing the sequence, and time of completion of all phases of WORK under this section.

B. At least 2 weeks in advance of imported fill use, the CONTRACTOR shall submit the following laboratory test data to the ENGINEER for each type of imported soil/gravel material to be used as compacted fill.

1. Moisture and Density Relationship - ASTM D1557 or D698 as required by project geotechnical engineering study;
2. Mechanical Analysis - AASHTO T-88; and,
3. Plasticity Index - ASTM D 4318.

C. Together with the above test data, the CONTRACTOR shall submit a 5-pound sample of each type of off-site fill material in an air tight container for the approval of the ENGINEER and CITY.

D. Submit the name of each material supplier and specific type and source of each material. Any change in source or soil type throughout the job requires approval of the CITY and the ENGINEER.

PART 2 - PRODUCTS

2.01 SUITABLE FILL AND BACKFILL MATERIAL REQUIREMENTS

A. General: Fill, backfill, and embankment materials shall be suitable selected or processed clean, fine earth, rock, or sand, free from grass, roots, brush, or other vegetation.

B. Fill and backfill materials to be placed within 6 inches of any structure or pipe shall be free of rocks or unbroken masses of earth materials having a maximum dimension larger than 3 inches.

C. Suitable Materials: Soils not classified as unsuitable as defined in Paragraph entitled, "Unsuitable Material" herein, are defined as suitable materials and may be used in fills, backfilling, and embankment construction subject to the specified limitations. In addition, when acceptable to the ENGINEER, some of the material listed as unsuitable may be used when thoroughly mixed with suitable material to form a stable composite.

D. Suitable materials may be obtained from on-site excavations, may be processed on-site materials, or may be imported. If imported materials are required to meet the requirements of this Section or to meet the quantity requirements of the project the CONTRACTOR shall provide the imported materials at no additional expense to the CITY, unless a unit price item is included for imported materials in the bidding schedule.

E. On-site fill

1. On-site materials for use as fill shall consist of excavated soil from other portions of the site;
2. The CONTRACTOR shall use the on-site soil judiciously to facilitate the construction schedule including the use of the most readily compactable soil for fill in building areas and as fill within 2 feet of pavement subgrade;
3. Topsoil shall not be utilized as engineered fill;
4. Excavated material containing rock, stone or masonry debris smaller than 2 feet in its largest dimension, may be mixed with suitable material and utilized up to 3 feet below proposed subgrade;
5. Excavated material containing rock, stone or masonry debris smaller than 6 inches in its largest dimension may be mixed with suitable material and utilized up to 18 inches below proposed subgrade;
6. No material greater than 2 inches in its largest dimension may be utilized within 18 inches of proposed subgrade;
7. No material greater than 2 inches in its largest dimension may be utilized as backfill for storm drainage or utility trenches.
8. Prior to placement, on-site material to be used as fill shall not contain:
   a. Debris other than crushed concrete and brick meeting the above requirements.
   b. Timber or railroad ties.
   c. Other deleterious materials such as steel rails, rebar, trash, etc.
   d. Hazardous material - Unsuitable and deleterious materials and debris shall be disposed of off-site in accordance with all applicable regulations.

F. Off-site imported fill

1. If necessary, off-site fill shall be obtained and provided by the CONTRACTOR;
2. Fill shall be clean, well graded granular soil which is non-expansive and non-collapsible and shall have less than 20% by weight passing the #200 sieve. The portion passing the
3. #200 shall be non-plastic. Fill with less fines (less than #200) may be required on project specific basis and as required by ENGINEER. Likewise, fill with more than 20% fines may be acceptable on a project specific basis or as identified in a geotechnical engineering study;
4. Imported fill shall be free of all hazardous substances. Certification of compliance and, if requested, test results substantiating compliance shall be furnished to the CITY and ENGINEER by the CONTRACTOR not less than one week prior to its intended use;
5. The CITY reserves the right to test off-site fill material for conformance with these specifications; and,
6. The CONTRACTOR shall be responsible for all permits and regulatory requirements associated with offsite borrow sources.

G. The following types of suitable materials are designated and defined as follows:

1. Type 1 (one inch minus granular backfill): Crushed rock, gravel, or sand with 100 percent passing a 1-inch sieve and a sand equivalent value not less than 50.
2. Type 2 (one half inch minus granular backfill): Crushed rock, gravel, or sand with 100 percent passing a 1/2-inch sieve and a sand equivalent value not less than 50.
3. Type 3 (sand backfill): Sand with 100 percent passing a 3/8-inch sieve, at least 90 percent passing a number 4 sieve, and a sand equivalent value not less than 30.
4. Type 4 (coarse rock backfill): Crushed rock or gravel with 100 percent passing a 1- inch sieve and not more than 10 percent passing a Number 4 sieve.
5. Type 5 (pea gravel backfill - ASTM #89): Crushed rock or gravel with 100 percent passing a 1/2-inch sieve, 90 percent passing a Number 8 sieve and not more than 10 percent passing a Number 4 sieve.
6. Type 6 (coarse drainrock - ASTM #4): Crushed rock or gravel meeting the following gradation requirements:

Sieve Size	Percentage Passing
2-inch	100
1 1/2-inch	90 - 100
1-inch	20 - 55
3/4-inch	0 - 15
No. 200	0-3

7. Type 7 (graded drain rock): Crushed rock or gravel, durable and free from slaking or decomposition under the action of alternate wetting or drying. The material shall be uniformly graded and shall meet the following gradation requirements.

Sieve Size	Percentage Passing
1-inch	100
3/4-inch	90 - 100
3/8-inch	40 - 100
No. 4	25 - 40
No. 8	18 - 33
No. 30	5 - 15
No. 50	0 - 7
No. 200	0 - 3

8. The drain rock shall have a sand equivalent value not less than 75. The finish graded surface of the drain rock immediately beneath hydraulic structures shall be stabilized to provide a firm, smooth surface upon which to construct reinforced concrete floor slabs.
9. Type 8 (Ballast Rock / ¾" Rock): Crushed rock or gravel, durable and free from slaking or decomposition under the action of alternate wetting or drying. The material shall be uniformly graded and shall meet the following gradation requirements.

Sieve Size	Percentage Passing
1-inch	100
3/4-inch	40 - 60
No. 4	0 - 3
No. 8	0 - 3

10. Type 9: (Bedding rock - ASTM #67): Well graded crushed rock or gravel meeting the following gradation:

Sieve Size	Percentage Passing
1-inch	100
3/4-inch	98 - 100
1/2-inch	55 - 70
3/8-inc	30 - 40
No. 4	0 - 6

11. Type 10 (Class I crushed stone - ASTM #57): Manufactured angular, granular crushed stone, rock, or slag, with 100 percent passing a 1-inch sieve and less than 5 percent passing a Number 4 sieve.

12. Type 11 (aggregate base): Crushed rock aggregate base material of such nature that it can be compacted readily by watering and rolling to form a firm, stable base for pavements. At the option of the CONTRACTOR, the grading for either the 1-1/2-inch maximum size or 3/4-inch maximum size shall be used. The sand equivalent value shall be not less than 22, and the material shall meet the following gradation requirements.

Sieve Size	1-1/2-inch Max. 3/4-inch Max.	Percentage Passing
2-inch	100	--
1-1/2-inch	90 – 100	--
1-inch	--	100
3/4-inch	50 - 85	90 - 100
No. 4	25 - 45	35 - 55
No. 30	10 - 25	10 - 30
No. 200	2 - 9	2 - 9

13. Type 12 (aggregate subbase): Crushed rock aggregate subbase material that can be compacted readily by watering and rolling to form a firm stable base. The sand equivalent value shall be not less than 18 and shall meet the following gradation requirements.

Sieve Size	Percentage Passing
3-inch	100
2 1/2-inch	87 - 100
No. 4	35 - 95
No. 200	0 - 29

14. Type 13 (cement-treated backfill): Material which consists of Type 7 material, or any mixture of Types B, C, G and H materials which has been cement-treated so that the cement content of the material is not less than 5 percent by weight when tested in accordance with ASTM D 2901. The ultimate compressive strength at 28 days shall be not less than 400 psi when tested in accordance with ASTM D 1633.
15. Type 14 (topsoil): Stockpiled topsoil material which has been obtained at the site by removing soil to a depth not exceeding 2 feet. Removal of the topsoil shall be done after the area has been stripped of vegetation and debris as specified.
16. Type 15 (trench plug): Low permeable fill material, a nondispersible clay material having a minimum plasticity index of 10.

H. If approved by the ENGINEER, any bituminous concrete on the site shall be milled/removed prior to placing any fill and shall be reused only onsite immediately below the pavement stone base course.

2.02 UNSUITABLE MATERIAL

A. Unsuitable soils for fill material shall include soils which, when classified under ASTM D 2487, fall in the classifications of Pt, OH, CH, MH or OL.

B. In addition, any soil which cannot be compacted sufficiently to achieve the percentage of maximum density specified for the intended use shall be classed as unsuitable material.

2.03 USE OF FILL, BACKFILL, AND EMBANKMENT MATERIAL TYPES

A. The CONTRACTOR shall use the types of materials as designated herein for all required fill, backfill, and embankment construction hereunder.

B. Where these Specifications conflict with the requirements of any local agency having jurisdiction, or with the requirements of a material manufacturer, the ENGINEER shall be immediately notified. In case of conflict therewith, the CONTRACTOR shall use the most stringent requirement, as determined by the ENGINEER.

C. Fill and backfill types shall be used in accordance with the following provisions:

1. Embankment fills shall be constructed of any mixture of Type 1 through Type 11 materials.
2. Pipe zone backfill, as defined under Paragraph 3.15 "Pipe and Utility Trench Backfill" herein, shall consist of the following materials for each pipe material listed below. Where pipelines are installed on grades exceeding 4 percent, and where backfill materials are graded such that there is less than 10 percent passing a Number 4 sieve, trench plugs of Type 13 or 14 materials shall be provided at maximum intervals of 200 feet or as shown on the DRAWINGS.
   a. Mortar coated pipe, concrete pipe, and uncoated ductile iron pipe shall be provided Type 1, 2, 3, 4, 5, 9 or 10 pipe zone backfill materials.
   b. Coal tar enamel coated pipe, polyethylene encased pipe, tape wrapped pipe, and other non-mortar coated pipe shall be backfilled with Type 3 pipe zone backfill material.
   c. Plastic pipe and vitrified clay pipe shall be backfilled with Type 9 or 10 pipe zone backfill material.
3. Trench zone backfill for pipelines as defined under Paragraph 3.15 "Pipe and Utility Trench Backfill" herein, shall be or any of Types 1 through 11 backfill materials or any mixture thereof, except that Type K material may be used for trench zone backfill in agricultural areas unless otherwise shown or specified.
4. Final backfill material for pipelines under paved area, as defined under Paragraph 3.15 "Pipe and Utility Trench Backfill" herein, shall be Type 11 backfill material. Final backfill under areas not paved shall be the same material as that used for trench backfill, except that Type K material shall be used for final backfill in agricultural areas unless otherwise shown or specified.
5. Trench backfill and final backfill for pipelines under structures shall be the same material as used in the pipe zone, except where concrete encasement is required by the Contract Documents.

6. Aggregate base materials under pavements shall be Type 11 material constructed to the thicknesses shown or specified. Where specified or shown, aggregate subbase shall be Type 12 Material.
7. Backfill around structures shall be or Types 1 through Type 11 materials, or any mixture thereof.
8. Backfill materials beneath structures shall be as follows:
9. Drainrock materials under hydraulic structures or other water retaining structure with underdrain systems shall be Type 7 or Type 8 material.
10. Under concrete hydraulic structures or other water retaining structures without underdrain systems, Types 7, 8 or 11 materials shall be used.
11. Under structures where groundwater must be removed to allow placement of concrete, Type 6 material shall be used.
12. Under all other structures, Type 4, 5, 6, 7, 8, 9 or 11 material shall be used.
13. Backfill used to replace pipeline trench over-excavation shall be a layer of Type 6, 7, 8, 9 or 10 materials. This backfill material shall be wrapped with filter fabric to prevent migration of fines for wet trench conditions. The same material as used for the pipe zone backfill may be used if the trench conditions are not wet. Filter fabric shall be Mirafi 140 N, Mirafi 700 X, or equal.
14. The top 6 inches of fill on reservoir roofs, embankment fills around hydraulic structures, and all other embankment fills shall consist of Type 14 material, topsoil.

2.04 EMBANKMENT

A. The maximum sizes of rock which will be permitted in the completed fill areas are as follows:

Depth Below Finish Grade	Maximum Allowable Diameter
Top 4-inches	1-inch
4-inches to 12-inches	3-1/2-inches
12-inches to 2-feet	6-inches
2-feet to 4-feet	12-inches
4-feet to 8-feet	24-inches
Below 8-feet	36-inches

B. Embankments shall be constructed of material containing no muck, stumps, roots, brush, vegetable matter, rubbish or other material that will not compact into a suitable and enduring roadbed, and material designated as undesirable shall be removed from the site. Where embankments are constructed adjacent to bridge end bents or abutments, rock larger than 3-1/2 inches in diameter shall not be placed within three feet of the location of any abutment.

C. Fill material containing debris, sod, biodegradable materials shall not be used as fill in construction areas.

D. Fill material required for the building pads and for pavement subgrade shall be granular fill, free of organic material.

E. Fill material required for pervious and sodded areas shall have a maximum organic component of 10%. CONTRACTOR shall provide, at without any cost to the CITY, organic content test results for approval by the ENGINEER.

2.05 EQUIPMENT

A. Compactor for mass earthwork shall be minimum 3 ton static drum weight vibratory roller or 5 ton static drum weight sheeps footed compactor as appropriate for the type of soil material at the site or other compactor approved by the ENGINEER.

B. Compactor for trenches and where access or maneuverability is limited use, a double drum walk behind roller or vibratory plate compactor or "jumping jack" tampers.

PART 3 - EXECUTION

3.01 GENERAL

A. Prior to bidding of all WORK within this section, the CONTRACTOR shall become thoroughly familiar with the geotechnical engineering study, if available, as well as the site, site conditions, and all portions of the WORK falling within this section.

B. The CONTRACTOR shall refer to the erosion control DRAWINGS, if provided, for staging of earthwork operations and for erosion control measures to be implemented prior to commencement of earthwork.

C. Locate and identify existing utilities that are to remain and protect them from damage.

D. Notify utility companies to allow removal and/or relocation of any utilities that are in conflict with the proposed improvements.

E. Protect fences, structures, sidewalks, paving, curbs, etc. to remain from equipment and vehicular traffic.

F. Protect benchmarks, property corners and all other survey monuments from damage or displacement. If a marker needs to be removed/relocated it shall be referenced by a licensed land surveyor and replaced, as necessary, by the same at no additional cost to the CITY.

G. Remove from the site, material encountered in grading operations that, in opinion of CITY or ENGINEER, is unsuitable or undesirable for backfilling in pavement or building areas as per Paragraph 2.01.

H. Identify required lines, levels, contours and datum to bring site grades to the proposed subgrade conditions inferred from the DRAWINGS.

I. Do not perform any WORK associated with this section prior to completion of all required inspections, tests and approvals.

J. When performing grading operations during periods of prolonged wet or dry weather, provide adequate measures for surface drainage and ground water control, and moisture control of soils (i.e., wetting or drying, scarify and discing) so as to place and compact the soil within the moisture content range a few percentage points of its optimum water content. Any disturbed areas should be proofrolled at the end of each day.

K. Sloping, shoring, bracing, and fencing shall be installed in accordance with Federal OSHA requirements as well as the requirements of all regulatory authorities having jurisdiction.

L. Allow no debris to accumulate on-site. Haul debris away from the site and dispose of at no cost to the CITY.

M. The CONTRACTOR shall remove and dispose of all excess excavated material at a site selected by the CONTRACTOR and reviewed by the ENGINEER.

3.02 JOB CONDITIONS

A. Protection: Use all means necessary to protect existing objects and vegetation. In the event of damage, immediately make all repairs, and replacements necessary to the acceptance of the ENGINEER at no cost to the CITY.

3.03 BACKFILL, FILLING & GRADING

A. Grades:

1. Cut, backfill, fill and grade to proper grade levels indicated. The proposed grades shown on the DRAWINGS are for establishing a finished grade over the site.

B. Filling:

1. Fill material shall be placed in horizontal layers and spread to obtain a uniform thickness.
2. After compaction, layers of fill are not to exceed twelve (12) inches for cohesive soils or eight (8) inches for noncohesive soils.

3.04 STRUCTURE, ROADWAY, AND EMBANKMENT EXCAVATION

A. General: Except when specifically provided to the contrary, excavation shall include the removal of all materials of whatever nature encountered, including all obstructions of any nature that would interfere with the proper execution and completion of the WORK. The removal of said materials shall conform to the lines and grades shown or ordered. Unless otherwise provided, the entire construction site shall be stripped of all vegetation and debris, and such material shall be removed from the site prior to performing any excavation or placing any fill. The CONTRACTOR shall furnish, place, and maintain all supports and shoring that may be required for the sides of the excavations, and all pumping, ditching, or other measure for the removal or exclusion of water, including taking care of storm water, groundwater, and wastewater reaching the site of the WORK from any source so as to prevent damage to the WORK or adjoining property. Excavations shall be sloped or otherwise supported in a safe manner in accordance with applicable State safety requirements and the requirements of OSHA Safety and Health Standards for Construction (29CFR1926).

B. Excavation Beneath Structures and Embankments: Except where otherwise specified for a particular structure or ordered by the ENGINEER, excavation shall be carried to the grade of the bottom of the footing or slab. Where shown or ordered, areas beneath structures or fills shall be over-excavated. The subgrade areas beneath embankments shall be excavated to remove not less than the top 6 inches of native material and where such subgrade is sloped, the native material shall be benched. When such over excavation is shown, both over-excavation and subsequent backfill to the required grade shall be performed by the CONTRACTOR. When such over-excavation is not shown but is ordered by the ENGINEER, such over- excavation and

any resulting backfill will be paid for under a separate unit price bid item if such bid item has been established; otherwise payment will be made in accordance with a negotiated price. After the required excavation or over-excavation has been completed, the exposed surface shall be scarified to a depth of 6 inches, brought to optimum moisture content, and rolled with heavy compaction equipment to obtain 98 percent of maximum density.

C. Excavation Beneath Paved Areas: Excavation under areas to be paved shall extend to the bottom of the aggregate base or subbase, if such base is called for; otherwise it shall extend to the paving thickness. After the required excavation has been completed, the top 12 inches of exposed surface shall be scarified, brought to optimum moisture content, and rolled with heavy compaction equipment to obtain 98 percent of maximum density. The finished subgrade shall be even, self-draining, and in conformance with the slope of the finished pavement. Areas that could accumulate standing water shall be regraded to provide a self-draining subgrade.

D. Notification of ENGINEER: The CONTRACTOR shall notify the ENGINEER at least 3 days in advance of completion of any structure excavation and shall allow the ENGINEER a review period of at least one day before the exposed foundation is scarified and compacted or is covered with backfill or with any construction materials.

3.05 PIPELINE AND UTILITY TRENCH EXCAVATION

A. General: Unless otherwise shown or ordered, excavation for pipelines and utilities shall be open-cut trenches. Trench widths shall be kept as narrow as is practical for the method of pipe zone densification selected by the CONTRACTOR, but shall have a minimum width at the bottom of the trench equal to the outside diameter of the pipe plus 24 inches for mechanical compaction methods and 18 inches for water consolidation methods. The maximum width at the top of the trench shall be equal to the outside diameter of the pipe plus 36 inches for pipe diameters 18 inches and larger and to the outside diameter of the pipe plus 24 inches for pipe diameters less than 18 inches, or as shown on the DRAWINGS.

B. Trench Bottom: Except when pipe bedding is required, the bottom of the trench shall be excavated uniformly to the grade of the bottom of the pipe. The trench bottom shall be given a final trim, using a string line for establishing grade, such that each pipe section when first laid will be continually in contact with the ground along the extreme bottom of the pipe. Rounding out the trench to form a cradle for the pipe will not be required. Excavations for pipe bells and welding shall be made as required.

C. Open Trench: The maximum amount of open trench permitted in any one location shall be determined by FDOT MOT approvals. All trenches shall be fully backfilled at the end of each day. The above requirements for backfilling will be waived in cases where the trench is located further than 100 feet from any traveled roadway or occupied structure. In such cases, however, barricades meeting OSHA requirements shall be provided and maintained. Requirements of Section 01550, paragraph 1.02B shall also apply.

D. Trench Over-Excavation: Where the DRAWINGS indicate that trenches shall be over-excavated, they shall be excavated to the depth shown, and then backfilled to the grade of the bottom of the pipe.

E. Over-Excavation: When ordered by the ENGINEER, whether indicated on the DRAWINGS or not, trenches shall be over-excavated beyond the depth shown. Such over-excavation shall be to the depth ordered. The trench shall then be backfilled to the grade of the bottom of the pipe. All WORK specified in this Section shall be performed by the CONTRACTOR when the over-excavation ordered by the ENGINEER is less than 6 inches below the limits shown.

When the over-excavation ordered by the ENGINEER is 6 inches or greater below the limits shown, additional payment will be made to the CONTRACTOR for that portion of the WORK which is located below said 6-inch distance. Said additional payment will be made under separate unit price bid items for over-excavation and bedding if such bid items have been established; otherwise payment will be made in accordance with a negotiated price.

F. Where pipelines are to be installed in embankment or structure fills, the fill shall be constructed to a level at least one foot above the top of the pipe before the trench is excavated.

3.06 OVER-EXCAVATION NOT ORDERED, SPECIFIED, OR SHOWN

A. Any over-excavation carried below the grade ordered, specified, or shown, shall be backfilled to the required grade with the specified material and compaction. Such WORK shall be performed by the CONTRACTOR at its own expense.

3.07 EXCAVATION IN LAWN AREAS

A. Where excavation occurs in lawn areas, the sod shall be carefully removed, kept damp, and stockpiled to preserve it for replacement. Excavated material may be placed on the lawn; provided that a drop cloth or other suitable method is employed to protect the lawn from damage. The lawn shall not remain covered for more than 72 hours. Immediately after completion of backfilling and testing of the pipeline, the sod shall be replaced and lightly rolled in a manner so as to restore the lawn as near as possible to its original condition. CONTRACTOR shall provide new sod if stockpiled sod has not been replaced within 72 hours.

3.08 EXCAVATION IN VICINITY OF TREES

A. Except where trees are shown to be removed, trees shall be protected from injury during construction operations. No tree roots over 2 inches in diameter shall be cut without express permission of the ENGINEER. Trees shall be supported during excavation by any means previously reviewed and approved by the ENGINEER.

3.09 ROCK EXCAVATION

A. Rock is defined as follows:

1. Rock shall be classified as material having a blow count in excess of 30 blows per foot from a Standard Penetration Test (ASTM D-1586) and exceeding 1000 psi from an Unconfined Compression Strength Test (ASTM D-2938); and,
2. General Excavation - Any material that cannot be excavated with a single-toothed ripper drawn by a crawler tractor having a minimum draw bar pull rated at not less than 71,000 pounds. (Caterpillar D9N or equivalent), and occupying an original volume of at least 2 cubic yards or more; and,
3. Trench Excavation - Any material that cannot be excavated with a backhoe having a break out force rated at not less than 44,000 pounds. (Caterpillar

235D or equivalent), and occupying an original volume of at least 2 cubic yards.

B. Rock excavation shall include removal and disposal of the following: (1) all boulders measuring 1/3 of a cubic yard or more in volume; (2) all rock material in ledges, bedding deposits, and unstratified masses which cannot be removed without systematic drilling and blasting; (3) concrete or masonry structures which have been abandoned; and (4) conglomerate deposits which are so firmly cemented that they possess the characteristics of rock as described in Paragraph 3.09(A).

C. Said rock excavation shall be performed by the CONTRACTOR; provided, that should the quantity of rock excavation be affected by any change in the scope of the WORK, an appropriate adjustment of the contract price will be made under a separate bid item if such bid item has been established; otherwise payment will be made in accordance with a negotiated price.

D. Explosives and Blasting: Blasting will not be permitted, except by express permission of the ENGINEER on a case-by-case basis. The use of explosives will be subject to the approval and regulations of all agencies having jurisdiction. If blasting is utilized at the site of the WORK, the CONTRACTOR shall take all precautions and provide all protective measures necessary to prevent damage to property and structures or injury to person. Prior to blasting, the CONTRACTOR shall secure all permits required by law for blasting operations and shall provide any additional hazard insurance required by the CITY. The CONTRACTOR shall have a fully qualified and experienced blasting supervisor in charge of all blasting operations.

E. The CONTRACTOR will be held responsible for all and shall make good any damage caused by blasting or resulting from its possession or use of explosives on the WORK.

F. All operations involving the handling, storage, and use of explosives shall be conducted in accordance with the requirements of the OSHA Standards for Construction, and in accordance with all local laws and regulations.

3.10 DISPOSAL OF UNSUITABLE EXCAVATED MATERIAL

A. The CONTRACTOR shall remove and dispose of all unsuitable excavated material. This shall include muck, tree roots, rocks, garbage, debris, or any other material designated as unsuitable by Part 2 of this Section. Disposal shall be at a site selected by the CONTRACTOR that is designated as an approved disposal site for the unsuitable material.

3.11 BACKFILL - GENERAL

A. Backfill shall not be dropped directly upon any structure or pipe. Backfill shall not be placed around or upon any structure until the concrete has attained sufficient strength to withstand the loads imposed. Backfill around water retaining structures shall not be placed until the structures have been tested, and the structures shall be full of water while backfill is being placed.

B. Except for drainrock materials being placed in over-excavated areas or trenches, backfill shall be placed after all water is removed from the excavation.

3.12 PLACING AND SPREADING OF BACKFILL MATERIALS

A. Backfill materials shall be placed and spread evenly in layers. When compaction is achieved using mechanical equipment the layers shall be evenly spread so that when

compacted each layer shall not exceed 6 inches in thickness.

B. During spreading each layer shall be thoroughly mixed as necessary to promote uniformity of material in each layer. Pipe zone backfill materials shall be manually spread, tamped, and haunched around the pipe so that when compacted the pipe zone backfill will provide uniform bearing and side support.

C. Where the backfill material moisture content is below the optimum moisture content water shall be added before or during spreading until the proper moisture content is achieved.

D. Where the backfill material moisture content is too high to permit the specified degree of compaction the material shall be dried until the moisture content is satisfactory.

3.13 COMPACTION - GENERAL

A. Compact each layer of fill in designated areas with approved equipment to achieve a maximum density at optimum moisture, AASHTO T 180 - latest edition.

1. Building Pads: compaction shall be to 98% of maximum density, unless otherwise shown on the DRAWINGS or specifications. Building pads shall be within plus or minus one-tenth (0.1) of a foot of the elevations shown on the plans.
2. Refer to Sections 02741 Asphaltic Concrete Paving and 02751 Portland Cement Concrete Paving for compaction requirements in the affected areas.
3. Under landscaped area, compaction shall be to 85% of maximum density, unless otherwise shown on the DRAWINGS.

B. No backfill shall be placed against any masonry or other exposed building surface until permission has been given by the ENGINEER and in no case until the masonry has been in place seven days.

C. Heavy construction equipment will not be permitted within ten (10) feet of any masonry or other exposed building surface.

D. Compaction in limited areas shall be obtained by the use of mechanical tampers or approved hand tampers. When hand tampers are used, the materials shall be deposited in layers not more than four inches thick. The hand tampers used shall be suitable for this purpose and shall have a face area of not more than 100 square inches. Special precautions shall be taken to prevent any wedging action against masonry, or other exposed building surfaces.

3.14 COMPACTION OF FILL, BACKFILL, AND EMBANKMENT MATERIALS

A. Each layer of Types 1, 2, 3, 7, 8, and 14 backfill materials as defined herein, where the material is graded such that at least 10% passes a No. 4 sieve, shall be mechanically compacted to the specified percentage of maximum density. Equipment that is consistently capable of achieving the required degree of compaction shall be used and each layer shall be compacted over its entire area while the material is at the required moisture content.

B. Each layer of Type 4, 5, 6, and 13 backfill materials shall be compacted by means of at least 2 passes from a flat plate vibratory compactor. When such materials are used for pipe zone backfill, vibratory compaction shall be used at the top of the pipe zone or at vertical intervals of 24 inches, whichever is the least distance from the

subgrade.

C. Type 9 and 10 material requires mechanical spreading and placement to fill voids but does not require mechanical compaction or vibration. Tamping shall be used in pipe zone areas.

D. Fill on structure roof slabs shall be deposited at least 30 days after the concrete roof slab has been placed. Equipment weighing more than 10,000 pounds when loaded shall not be used on a roof. A roller weighing not more than 8,000 pounds shall be used to compact fill on a roof.

E. Flooding, ponding, or jetting shall not be used for fill on roofs, backfill around structures, backfill around reservoir walls, for final backfill materials, or aggregate base materials.

F. Pipe zone backfill materials that are granular may be compacted by a combination of flooding and vibration using concrete vibrators or by jetting, when acceptable to the ENGINEER. Tamping shall be used to ensure adequate bedding in the pipe zone.

G. Pipeline trench zone backfill materials, containing 5% or less of material passing a No. 200 sieve, may be compacted using flooding and jetting or vibration if the CONTRACTOR uses effective procedures that yield the specified compaction test results. Flooding and jetting shall not be done in such a manner that the pipe or nearby utilities are damaged, in areas of poorly draining or expansive soils, or where the use of the procedure is prohibited by any agency having jurisdiction over the street or right-of-way. Approved jet pipes or immersible vibrators shall be used so that each backfill layer is saturated and consolidated to its full depth before the next layer is placed. Jet pipes shall be kept at least 6 inches away from the pipe where the backfills being consolidated and 2 feet away from other pipes or utilities.

H. Equipment weighing more than 10,000 pounds shall not be used closer to walls than a horizontal distance equal to the fill at that time. Hand operated power compaction equipment shall be used where use of heavier equipment is impractical or restricted due to weight limitations.

I. Compaction Requirements: The following compaction test requirements shall be in accordance with AASHTO T-180, T-99-C or ASTM D 2487 as applicable. Where agency or utility company requirements govern, the highest compaction standards shall apply.

Location or Use of Fill	**Percentage of Maximum Density AASHTO T-180**	**Testing Frequency 1 per lift per**
Pipe zone backfill portion above bedding for flexible pipe.	100	150 LF
Pipe zone backfill bedding and over-excavated zones under bedding/pipe for flexible pipe, including trench plugs.	100	150 LF
Pipe zone backfill portion above bedding for rigid pipe.	100	150 LF
Pipe zone backfill bedding and over-excavated zones under bedding/pipe for rigid pipe.	100	150 LF

Final backfill, beneath paved areas or structures.	100	10,000 SF
Final backfill, not beneath paved areas or structures.	95	20,000 SF
Trench zone backfill, not beneath paved areas or structures, including trench plugs.	95	150 LF

Location or Use of Fill	**Percentage of Maximum Density AASHTO T-180**	**Testing Frequency 1 per lift per**
Embankments.	98	20,000 LF
Embankments, beneath paved areas or structures.	100	10,000 SF
Backfill beneath structures, hydraulic structures.	100	100 SF
Backfill around structures.	98	100 SF
Topsoil (type 14 material)	85	20,000 SF
Aggregate base or subbase (type 11or 12 material)	100	10,000 SF

J. Trench Backfill Requirements: the pipe has been structurally designed based upon the trench configuration specified herein.

K. The CONTRACTOR shall maintain the indicated trench cross section up to a horizontal plane lying 6 inches above the top of the pipe.

L. If, at any location under said horizontal plane, the CONTRACTOR slopes the trench walls or exceeds the maximum trench widths indicated in the Contract Documents, the pipe zone backfill shall be "improved" or the pipe class increased as specified herein, at no additional cost to the CITY. "Improved" backfill shall mean sand-cement backfill or other equivalent materials acceptable to the ENGINEER.

M. If the allowable deflection specified for the pipe is exceeded, the CONTRACTOR shall expose and reround or replace the pipe, repair all damaged lining and coating, and reinstall the pipe zone material and trench backfill as specified at no additional expense to the CITY.

3.15 PIPE AND UTILITY TRENCH BACKFILL

A. Pipe Zone Backfill: The pipe zone is defined as that portion of the vertical trench cross-section lying between a plane 6 inches below the bottom surface of the pipe, i.e., the trench subgrade, and a plane at a point 6 inches above the top surface of the pipe. The bedding for flexible pipe is defined as that portion of pipe zone backfill material between the trench subgrade and the bottom of the pipe. The bedding for rigid pipe is defined as that portion of the pipe zone backfill material between the trench subgrade and a level line which varies from the bottom of the pipe to the springline as shown.

B. Bedding shall be provided for all sewers, drainage pipelines, and other gravity flow pipelines. Unless otherwise specified or shown, for other pipelines the bedding may be omitted if all the following conditions exist.

1. The pipe bears on firm, undisturbed native soil which contains only particles that will pass a one-inch sieve.
2. The excavation is not through rock or stones.

3. The trench subgrade soils are classified as suitable fill and backfill materials per Paragraph 2.01.
4. The trench subgrade soils have, as a maximum, a moisture content that allows compaction.

C. Where bedding is required, after compacting the bedding the CONTRACTOR shall perform a final trim using a stringline for establishing grade, such that each pipe section when first laid will be continually in contact with the bedding along the extreme bottom of the pipe. Excavation for pipe bells and welding shall be made as required.

D. The pipe zone shall be backfilled with the specified backfill material. The pipe zone shall be well tamped per manufacturer's recommendation to prevent sags or settlement of the pipe. The CONTRACTOR shall exercise care to prevent damage to the pipeline coating, cathodic bonds, or the pipe itself during the installation and backfill operations.

E. Trench Zone Backfill: After the pipe zone backfill has been placed as specified above, and after all excess water has completely drained from the trench, backfilling of the trench zone may proceed. The trench zone is defined as that portion of the vertical trench cross-section lying between a plane 6 inches above the top surface of the pipe and a plane at a point 18 inches below the finished surface grade, or if the trench is under pavement, 18 inches below the roadway subgrade. If flooding, ponding, or jetting is used the pipe shall be filled with water to prevent flotation.

F. Final Backfill: Final backfill is all backfill in the trench cross-sectional area within 18 inches of finished grade, of if the trench is under pavement, all backfill within 18 inches of the roadway subgrade.

3.16 EMBANKMENT CONSTRUCTION

A. The area where an embankment is to be constructed shall be cleared of all vegetation, roots and foreign material. Following this, the surface shall be moistened, scarified to a depth of 6 inches, and rolled or otherwise mechanically compacted. Embankment fill material shall be placed and spread evenly in approximately horizontal layers. Each layer shall be moistened or aerated, as necessary. Unless otherwise approved by the ENGINEER, each layer shall not exceed 6 inches of compacted thickness. The embankment fill and the scarified layer of underlying ground shall be compacted to 95% of maximum density under structures and paved areas, and 90% of maximum density elsewhere.

B. When an embankment fill is to be made and compacted against hillsides or fill slopes steeper than 4:1, the slopes of hillsides or fills shall be horizontally benched to key the embankment fill to the underlying ground. A minimum of 12 inches normal to the slope of the hillside or fill shall be removed and recompacted as the embankment fill is brought up in layers. Material thus cut shall be recompacted along with the new fill material at the CONTRACTOR's expense. Hillside of fill slopes 4:1 or flatter shall be prepared in accordance with Paragraph A, above.

C. Where embankment or structure fills are constructed over pipelines, the first 4 feet of fill over the pipe shall be constructed using light placement and compaction equipment that does not damage the pipe. Heavy construction equipment shall maintain a minimum distance from the edge of the trench equal to the depth of the trench until at least 4 feet of fill over the pipe has been completed.

3.17 COMPACTION OF SUBGRADE SURFACES

A. Any soft areas exhibiting excessive weaving or unsatisfactory material identified during excavation, fill placement, compaction and proof testing shall be removed, replaced with suitable fill, and compacted as specified.

B. Prior to preparing the subgrade in low lying areas, perform the following procedures:

1. Drain standing water by gravity or with a pump. Water should not be discharged directly to a storm drain system;
2. After drainage of low area is complete, remove mulch, mud, debris, and other unsuitable material using equipment and methods that will minimize disturbance to the underlying soils;
3. Thoroughly compact subgrade as specified.
4. If proposed for fill, all muck, mud and other materials removed from above low areas shall be dried on-site by spreading in thin layers for observation by the CITY or the CITY's representative. If, after observation by the CITY material is found to be unsuitable, it shall be removed from the site.

3.18 UNDERCUT EXCAVATION

A. When approved by the CITY and recommended by the ENGINEER, the CONTRACTOR may be required to remove natural soil materials in areas where fills are to be placed when determined to be undesirable in their location or condition. The CONTRACTOR shall be required to remove the undesirable material and backfill with approved material properly compacted.

B. At locations where unstable soil is shown on the DRAWINGS or identified within the geotechnical engineering study, the removal and replacement of such soil shall be as directed on the DRAWINGS or as directed by the ENGINEER and the CITY.

C. At locations where soil is wet of optimum moisture, the CONTRACTOR shall provide a “good faith” effort in drying and discing these areas prior to completing undercut excavation as approved by the ENGINEER and CITY.

D. Where undercutting is required adjacent or beneath the location of the proposed drainage structure, undercut and backfill shall be done over a sufficient distance adjacent to the installation to prevent future operations from disturbing the completed drainage structure.

E. All material removed in the WORK of undercut excavation will be classified by the geotechnical engineer and CITY as either suitable for other use without excessive manipulation and utilized by the CONTRACTOR elsewhere in the WORK, or unsuitable for future use and disposed of by the CONTRACTOR as directed by the ENGINEER.

F. The CONTRACTOR shall conduct undercut operations in such a way that the necessary measurements can be taken before any backfill is placed.

G. Backfill in undercut areas shall be placed as a continuous operation along with the undercutting operation. No backfill material shall be placed in water unless otherwise permitted by the ENGINEER.

3.19 EXCAVATION, FILL, AND SUBGRADE PREPARATION

A. General

1. The building limits shall be as identified on the construction DRAWINGS. The building subgrade shall be constructed to include a minimum of 10 feet beyond the building limits, or as directed by the CITY;
2. Structures include buildings, footings, foundations, retaining walls, embankment berms for storm water detention basins, slabs, tanks, curbs, mechanical and electrical appurtenances or other human-made stationary features constructed above or below the ground surface;
3. The building pad subgrade shall be prepared in strict accordance with the geotechnical engineering study and these specifications, whichever is more stringent; and,
4. The CONTRACTOR shall cut or fill to the proposed subgrade elevations based on finished grades and the pavement thicknesses as shown on the DRAWINGS. Subgrade elevations shall be constructed to within 0 to minus ½ inch of the proposed grades specified.

B. Excavation

1. Where existing grades are above proposed subgrade elevation, excavate materials in the building areas to line and grade as shown in the DRAWINGS being careful not to over excavate beyond the elevations needed for building subgrades;
2. Excavate organic soils from within the building area. Excavated on-site organic soils, which are unsuitable for building fill, may be used in landscaped areas. Otherwise this material shall be disposed of off-site;
3. Unsuitable material, such as wood and any other deleterious materials determined to be unsuitable by the geotechnical engineer for use as on-site fill, shall be disposed of offsite.

C. Subgrade Preparation for Fill

1. Existing grades below building areas shall be leveled prior to fill placement. The CONTRACTOR shall remove existing lawn and top soil in these areas prior to placement of any fill; and,
2. All existing grades below building areas shall be proofrolled and compacted per this section.

D. Fill Placement

1. No fill material shall be placed in areas of standing water, in areas of frozen or thawing ground, or in areas that have not been approved by the ENGINEER;
2. No fill materials shall be placed during unfavorable weather conditions. When WORK is interrupted by heavy rains, fill operations shall not be resumed until all saturated surficial soils are returned to satisfactory moisture content as determined by the ENGINEER;
3. Fill lift surfaces shall be made smooth and free from ruts or indentations at the end of any workday when precipitation is forecast to prevent saturation of surficial fill material. Fill surfaces shall be graded to drain and sealed with a smooth drum roller at the completion of each work day;
4. The fill shall be placed in uniform loose lifts not exceeding 12 inches and compacted in systemic method to achieve at least 6 passes of the compactor. Larger lift thickness, but no greater than 2 feet shall be permitted if broken rock is utilized and placed at least 6 feet below of finished grade;
5. Shot rock may be utilized as engineered fill as approved by the ENGINEER;

6. Each lift shall be compacted to the minimum densities listed in this section as appropriate for the project and as specified in the geotechnical engineering study;
7. The CONTRACTOR shall adjust the water content by aeration or adding water to achieve the required density. Assist drying by discing, harrowing or pulverizing until moisture content is reduced to achieve proper compaction and facilitate the construction schedule;
8. Wet, saturated material shall be air dried as necessary to achieve the field densities specified in this Section. Removal and replacement shall not occur without prior approval or CITY. Removal and replacement shall be used if necessary to facilitate the construction schedule;
9. Remove areas of finished subgrade found to have insufficient compaction density of depth necessary and replace with suitable compacted fill as approved by the CITY or ENGINEER. Surface of subgrade after compaction shall be hard, uniform, smooth, stable, and true to grade and cross-section; and,
10. Fill placed on slopes greater than 1 vertical to 3 horizontal shall have each lift benched onto the slope at least 3 feet.

3.20 PROOFROLLING

A. The WORK covered by this subsection consists of furnishing and operating, proofrolling equipment at the direction of the ENGINEER.

B. Proofrolling shall be under the observation of the geotechnical engineer as described herein and under the following schedule:

1. Immediately following the completion of excavation to proposed subgrades in cut areas, proofrolling shall be performed as specified; and,
2. Immediately prior to and following stone base course placement, in pavement and building pad areas for final floor slab preparation, all subgrade and stone base areas shall be proofrolled. Any areas which deflect, rut or pump under the loaded dump truck shall be undercut and replaced with compacted fill material or stone base course as directed by the ENGINEER and approved by the CITY, at no additional cost to the CITY.

C. Proofrolling shall be done with 1 pass of a fully loaded tandem dump truck equal to or exceeding 50,000 pounds or other construction equipment if approved by the ENGINEER.

D. Construction methods shall be as follows:

1. After the subgrade or stone base course has been completed the subgrade or stone base course shall then be proofrolled. The coverage areas and methods will be identified by the ENGINEER;
2. The equipment shall be operated at a speed that the ENGINEER can comfortably and slowly walk alongside the equipment;
3. If it becomes necessary to take corrective action, such as but not limited to underdrain installation, undercut and backfill of an unsuitable material, and aeration of excessively wet material in areas that have been proofrolled, see Paragraph 3.18. These areas shall be proofrolled again following the completion of the necessary corrections. If the corrections are necessary due to the negligence of the CONTRACTOR, the corrective WORK and additional

proofrolling shall be performed by the CONTRACTOR at no cost to the CITY;

4. The CONTRACTOR shall protect all structural facilities on the project, such as but not limited to box culverts, pipe culverts, and utilities, from damage by the proofrolling equipment.

3.21 MAINTENANCE OF SUBGRADE

A. Finished subgrades shall be verified by the CONTRACTOR to ensure proper elevation and conditions for construction above subgrade.

B. Protect subgrade from excessive construction traffic and wheel loading including concrete and dump trucks.

C. Remove areas of finished subgrade judged to be unsatisfactory to the depth necessary and replace in a manner that will comply with compaction requirements by use of material equal to or better than the best subgrade material on site. Surface of subgrade after compaction shall be hard, uniform, smooth, stable, and true to grade and cross-section.

3.22 CORRECTION OF GRADE

A. Bring to required grade levels areas where settlement, erosion or other grade changes occur.

3.23 MAINTENANCE AND PROTECTION OF WORK

A. While construction is in progress adequate drainage for the roadbed shall be maintained at all times.

B. The CONTRACTOR shall maintain all earthwork construction throughout the life of the contract, unless otherwise provided, and shall take all reasonable precautions to prevent loss of material from the roadway due to the action of wind or water. The CONTRACTOR shall repair without any additional expense to the CITY, except as otherwise provided herein, any slides, washouts, settlement, subsidence, or other mishap which may occur prior to final acceptance of the WORK.

C. All channels excavated as a part of the contract WORK shall be maintained against natural shoaling or other encroachments to the lines, grades, and cross sections shown on the plans, until final acceptance of the project.

3.24 AS-BUILT SURVEY

A. At the completion of the WORK and prior to final inspection of the area, the CONTRACTOR shall provide the ENGINEER with an as-built topographic survey made by a registered Professional Surveyor & Mapper, of the State of Florida.

B. The Professional Surveyor & Mapper is to certify on the survey whether or not the as-built conditions conform to the elevations shown on the DRAWINGS to within plus or minus one- tenth (0.1) of a foot.

3.25 MEASUREMENT AND PAYMENT

A. There shall be no special measurement or payment for the WORK under this section, it shall be included in the associated bid item for this WORK.

END OF SECTION

SECTION 02501 PIPING, GENERAL

PART 1 - GENERAL

1.01 RELATED DOCUMENTS

A. All applicable provisions of the Bidding and Contract Requirements, and Division 1 - General Requirements shall govern the WORK under this Section.

1.02 WORK INCLUDED

A. The CONTRACTOR shall furnish and install all piping systems shown and specified, in accordance with the requirements of the Contract Documents. Each system shall be complete with all necessary fittings, hangers, supports, anchors, expansion joints, flexible connectors, valves, accessories, heat tracing, insulation, lining and coating, testing, disinfection, excavation, backfill and encasement, to provide a functional installation.

B. The piping shown is intended to define the general layout, configuration, routing, method of support, pipe size, and pipe type. The mechanical DRAWINGS are not pipe construction or fabrication DRAWINGS. It is the CONTRACTOR's responsibility to develop the details necessary to construct all mechanical piping systems to accommodate the specific equipment provided, and to provide and install all spools, spacers, adapters, connectors, etc., for a complete and functional system.

1.03 RELATED WORK

A. Section 02221 - Trenching, Bedding, And Backfill For Pipe

B. Section 02300 - Earthwork.

C. Section 02504 - Valves, General.

D. Other Sections as applicable.

1.04 REFERENCE STANDARDS

A. Codes: All codes, as referenced herein are specified in Section 01420, "Reference Standards".

B. Commercial Standards:

1. ANSI/ASME B1.20.1 - Pipe Threads, General Purpose (inch).
2. ANSI B16.5 - Pipe Flanges and Flanged Fittings, Steel Nickel Alloy and other Special Alloys.
3. ANSI/AWWA C207 - Steel Pipe Flanges for Water Works Service, Sizes 4 in through 144 in
4. ANSI/AWWA C606 - Grooved and Shouldered Joints.
5. ANSI/AWS D1.1 - Structural Welding Code.
6. ASTM A 307 - Specification for Carbon Steel Bolts and Studs, 6,000 psi Tensile.
7. ASTM A 325 - Specification for High-Strength Bolts for Structural Steel Joints.
8. ASTM D 792 - Test Methods for Specific Gravity and Density of Plastics by Displacement.
9. ASTM D 2000 - Classification System for Rubber Products in Automotive Applications.

1.04 SUBMITTALS

A. The CONTRACTOR shall submit complete shop DRAWINGS and certificates, test reports, affidavits of compliance, of all piping systems, in accordance with the requirements in Section 01340 - Shop Drawings, Working Drawings and Samples, and as specified in the individual sections. The shop DRAWINGS shall include all necessary dimensions and details on pipe joints, fittings, fitting specials, valves, appurtenances, design calculations, and material lists. The submittals shall include detailed layout, spool, or fabrication DRAWINGS which show all pipe spools, spacers, adapters, connectors, fittings, and pipe supports necessary to accommodate the equipment and valves provided in a complete and functional system.

B. All expenses incurred in making samples for certification of tests shall be borne by the CONTRACTOR.

C. The CONTRACTOR shall submit as part of the shop DRAWINGS a certification from the pipe fabricator stating that all pipes will be fabricated subject to a recognized Quality Control Program. An outline of the program shall be submitted to the ENGINEER for review prior to the fabrication of any pipe

1.06 QUALITY ASSURANCE

A. Inspection: All pipe shall be subject to inspection at the place of manufacture. During the manufacture of the pipe, the ENGINEER shall be given access to all areas where manufacturing is in progress and shall be permitted to make all inspections necessary to confirm compliance with the Specifications.

B. Tests: Except where otherwise specified, all materials used in the manufacture of the pipe shall be tested in accordance with the applicable Specifications and Standards. The CONTRACTOR shall perform all tests at no additional cost to the CITY.

C. Welding Requirements: All welding procedures used to fabricate pipe shall be pre-qualified under the provisions of ANSI/AWS D1.1. Welding procedures shall be required for, but not necessarily limited to, longitudinal and girth or spiral welds for pipe cylinders, spigot and bell ring attachments, reinforcing plates and ring flange welds, and plates for lug connections.

D. Welder Qualifications: All welding shall be done by skilled welders, welding operators, and tackers who have had adequate experience in the methods and materials to be used. Welders shall be qualified under the provisions of ANSI/AWS D1.1 by an independent local, approved testing agency not more than 6 months prior to commencing WORK on the pipeline. Machines and electrodes similar to those used in the WORK shall be used in qualification tests.

E. The CONTRACTOR shall furnish all material and bear the expense of qualifying welders.

1.07 MANUFACTURER'S SERVICE REPRESENTATIVE

A. Where the assistance of a manufacturer's service representative is advisable, in order to obtain perfect pipe joints, supports, or special connections, the CONTRACTOR shall furnish such assistance at no additional cost to the CITY

1.08 MATERIAL DELIVERY, STORAGE, AND HANDLING

A. All piping materials, fittings, valves, and accessories shall be delivered in a clean and undamaged condition and stored off the ground, to provide protection against

oxidation caused by ground contact. All defective or damaged materials shall be replaced with new materials.

1.09 CLEANUP

A. After completion of the WORK, all remaining pipe cuttings, joining and wrapping materials, and other scattered debris, shall be removed from the site. The entire piping system shall be handed over in a clean and functional condition.

PART 2 - PRODUCTS

2.01 GENERAL

A. All pipes, fittings, and appurtenances shall be furnished in accordance with the requirements of the applicable Sections of Division 2 and as specified herein.

B. Lining: All requirements pertaining to thickness, application, and curing of pipe lining, are in accordance with the requirements of the applicable Sections of Division 2, unless otherwise specified.

C. Coating: All requirements pertaining to thickness, application, and curing of pipe coating, are in accordance with the requirements of the applicable Sections of Division 2, unless otherwise specified. Pipes above ground or in structures shall be field-painted as directed by the ENGINEER.

D. Grooved Piping Systems: Piping systems with grooved joints and fittings may be provided in lieu of screwed, flanged, welded, or mechanical joint systems for ductile iron yard piping. (All piping above and below ground within the property limits of treatment plants, pump stations, and similar installations). All grooved couplings on buried piping must be bonded. To assure uniform and compatible piping components, all grooved fittings, couplings, and valves shall be from the same manufacturer. The CONTRACTOR shall make the coupling manufacturer responsible for the selection of the correct style of coupling and gasket for each individual location.

2.02 PIPE FLANGES

A. Flanges: Where the design pressure is 150 psi or less, flanges shall conform to either ANSI/AWWA C207 Class D or ANSI B16.5 150 pound class. Where the design pressure is greater than 150 psi, up to a maximum of 275 psi, flanges shall conform to either ANSI/AWWA C207 Class E, Class F, or ANSI B16.5 150 pound class. However, AWWA flanges shall not be exposed to test pressure greater than 125% of rated capacity. For higher test pressures, the next higher rated AWWA flange or an ANSI-rated flange shall be selected. Where the design pressure is greater than 275 psi up to a maximum of 700 psi, flanges shall conform to ANSI B16.5 300 pound class. Flanges shall have flat faces and shall be attached with bolt holes straddling the vertical axis of the pipe unless otherwise shown. Attachment of the flanges to the pipe shall conform to the applicable requirements of ANSI/AWWA C207. Flanges for miscellaneous small pipes shall be in accordance with the standards specified for these pipes.

B. Blind Flanges: Blind flanges shall be in accordance with ANSI/AWWA C207, or with the standards for miscellaneous small pipes. All blind flanges for pipe sizes 12 inches and over shall be provided with lifting eyes in form of welded or screwed eye bolts.

C. Flange Coating: All machined faces of metal blind flanges and pipe flanges shall be coated with a temporary rust-inhibitive coating to protect the metal until the installation is completed.

D. Flange Bolts: All bolts and nuts shall conform to pipe manufacturers recommendations. Studs and bolts shall extend through the nuts a minimum of 1/4-inch. All-thread studs shall be used on all valve flange connections, where space restrictions preclude the use of regular bolts.

E. Insulating Flanges: Insulated flanges shall have bolt holes 1/4-inch diameter greater than the bolt diameter.

F. Insulating Flange Sets: Insulating flange sets shall be provided where shown. Each insulating flange set shall consist of an insulating gasket, insulating sleeves and washers and a steel washer. Insulating sleeves and washers shall be one piece when flange bolt diameter is 1-1/2-inch or smaller and shall be made of acetal resin. For bolt diameters, larger than 1-1/2-inch, insulating sleeves and washers shall be 2-piece and shall be made of polyethylene or phenolic. Steel washers shall be in accordance with ASTM A 325. Insulating gaskets shall be full-face.

G. Insulating Flange Manufacturers, or Equal:

1. JM Red Devil, Type E;
2. Maloney Pipeline Products Co., Houston;
3. PSI Products, Inc., Burbank, California.

H. Flange Gaskets: Gaskets for flanged joints shall be full-faced, 1/16-inch thick compressed sheets of aramid fiber base, with nitrile binder and non-stick coating, suitable for temperatures to 700 degrees F, a pH of one to eleven, and pressures to 1000 psig. Blind flanges shall have gaskets covering the entire inside face of the blind flange and shall be cemented to the blind flange. Ring gaskets shall not be permitted.

I. Flange Gasket Manufacturers, or Equal:

1. John Crane, style 2160;
2. Garlock, style 3000.

2.03 THREADED INSULATING CONNECTIONS

A. General: Threaded insulating bushings, unions, or couplings, as appropriate, shall be used for joining threaded pipes of dissimilar metals and for piping systems where corrosion control and cathodic protection are involved.

B. Materials: Threaded insulating connections shall be of nylon, Teflon, polycarbonate, polyethylene, or other non-conductive materials, and shall have ratings and properties to suit the service and loading conditions.

2.04 MECHANICAL-TYPE COUPLINGS (GROOVED OR BANDED PIPE)

A. General: Cast mechanical-type couplings shall be provided where shown. The couplings shall conform to the requirements of ANSI/AWWA C606. All gaskets for mechanical-type couplings shall be compatible with the piping service and fluid utilized, in accordance with the coupling manufacturer's recommendations. The wall thickness of all grooved piping shall conform with the coupling manufacturer's recommendations to suit the highest expected pressure. To avoid stress on equipment, all equipment connections shall have rigid-grooved couplings, or harness sets in sizes where rigid couplings are not available, unless thrust restraint is

provided by other means. The CONTRACTOR shall have the coupling Manufacturer's service representative verify the correct choice and application of all couplings and gaskets, and the workers, to assure a correct installation.

B. Couplings for Steel Pipe, Manufacturers, or Equal:

1. Gustin-Bacon (banded or grooved);
2. Victaulic Style 41 or 44 (banded, flexible);
3. Victaulic Style 77 or 07 (grooved).

C. Ductile Iron Pipe Couplings, Manufacturers, or Equal:

1. Gustin-Bacon;
2. Victaulic Style 31.

Note: Ductile iron pipe couplings shall be furnished with flush seal gaskets.

2.05 SLEEVE-TYPE COUPLINGS

A. Construction: Sleeve-type couplings shall be provided where shown, in accordance with ANSI/AWWA C219 unless otherwise specified, and shall be of steel with steel bolts, without pipe stop, and shall be of sizes to fit the pipe and fittings shown. The middle ring shall be not less than 1/4-inch in thickness and shall be either 5 or 7 inches long for sizes up to and including 30 inches and 10 inches long for sizes greater than 30 inches, for standard steel couplings, and 16 inches long for long-sleeve couplings. The followers shall be single-piece contoured mill section welded and cold-expanded as required for the middle rings. They shall be of sufficient strength to accommodate the number of bolts necessary to obtain adequate gasket pressures without excessive rolling. The shape of the follower shall be of such design as to provide positive confinement of the gasket. Buried sleeve-type couplings shall be epoxy-coated at the factory as specified.

B. Pipe Preparation: The ends of the pipe, where specified or shown, shall be prepared for flexible steel couplings. Plain ends for use with couplings shall be smooth and round for a distance of 12 inches from the ends of the pipe, with outside diameter not more than 1/64-inch smaller than the nominal outside diameter of the pipe. The middle ring shall be tested by cold-expanding a minimum of one percent beyond the yield point, to proof-test the weld to the strength of the parent metal. The weld of the middle ring shall be subjected to air test for porosity.

C. Gaskets: Gaskets for sleeve-type couplings shall be rubber-compound material that will not deteriorate from age or exposure to air under normal storage or use conditions. Gaskets for wastewater and sewerage applications shall be Buna "N," grade 60, or equivalent suitable elastomer.

1. The rubber in the gasket shall meet the following specifications:
   a. Color - Jet Black
   b. Surface - Non-blooming
   c. Durometer Hardness - 74±5
   d. Tensile Strength - 1000 psi Minimum
   e. Elongation - 175% Minimum
2. The gaskets shall be immune to attack by impurities normally found in water or wastewater. All gaskets shall meet the requirements of ASTM D 2000, AA709Z, meeting Suffix B13 Grade 3, except as noted above. All gaskets shall be compatible with the piping service and fluid utilized.

D. Insulating Couplings: Where insulating couplings are required, both ends of the coupling shall have a wedge-shaped gasket which assembles over a rubber sleeve of an insulating compound in order to obtain insulation of all coupling metal parts from the pipe.

E. Restrained Joints: All sleeve-type couplings on pressure lines shall be harnessed unless thrust restraint is provided by other means. Harnesses shall be in accordance with the requirements of the appropriate reference standard, or as shown.

F. Manufacturers or Equal:

1. Dresser, Style 38;
2. Ford Meter Box Co., Inc., Style FC1 or FC3;
3. Smith-Blair, Style 411.

2.06 FLEXIBLE CONNECTORS

A. Flexible connectors shall be installed in all piping connections to engines, blowers, compressors, and other vibrating equipment, and where shown. Flexible connectors for service temperatures up to 180 degrees F shall be flanged, reinforced Neoprene or Butyl spools, rated for a working pressure of 40 to 150 psi, or reinforced, flanged duck and rubber, as best suited for the application. Flexible connectors for service temperatures above 180 degrees F shall be flanged, braided stainless steel spools with inner, annular, corrugated stainless steel hose, rated for minimum 150 psi working pressure, unless otherwise shown. The connectors shall be 9 inches long, face-to-face flanges, unless otherwise shown. The final material selection shall be approved by the manufacturer. The CONTRACTOR shall submit manufacturer's shop DRAWINGS and calculations.

2.07 EXPANSION JOINTS

A. All piping subject to expansion and contraction shall be provided with sufficient means to compensate for such movement, without exertion of undue forces to equipment or structures. This may be accomplished with expansion loops, bellow-type expansion joints, or sliding-type expansion joints. Expansion joints shall be of stainless steel, monel, rubber, or other materials, best suited for each individual service. The CONTRACTOR shall submit detailed calculations and manufacturer's shop DRAWINGS, guaranteeing satisfactory performance of all proposed expansion joints, piping layouts showing all anchors and guides, and information on materials, temperature and pressure ratings.

2.08 PIPE THREADS

A. All pipe threads shall be in accordance with ANSI/ASME B1.20.

PART 3 - EXECUTION

3.01 GENERAL

A. All pipes, fittings, and appurtenances shall be installed in accordance with the requirements of the applicable Section of Divisions 2. The lining manufacturer shall take full responsibility for the complete, final product and its application. All pipe ends and joints at screwed flanges shall be epoxy-coated, to assure continuous protection.

B. Where core drilling is required for pipes passing through existing concrete, core drilling locations shall be determined by radiograph of concrete construction to avoid damage to embedded raceways and rebars.

C. All exposed piping shall be painted. All piping to be painted shall be color coded in accordance with CITY's standard color code. Color samples shall be submitted to ENGINEER for final color selection.

END OF SECTION

SECTION 02502 DUCTILE IRON PIPE AND FITTINGS

PART 1 - GENERAL

1.01 SECTION INCLUDES

A. Ductile iron pipe and fittings piping shall be installed in those locations and depths as shown on the DRAWINGS.

B. The equipment and materials specified herein is intended to be standard and ductile iron pipe and fittings used in transporting water and wastewater.

1.02 RELATED SECTIONS

A. Section 01340 – Shop Drawings, Working Drawings and Samples

B. Section 02501 – Piping, General

C. Section 02503 – Pipeline Testing

D. Section 02503 - Valves, General

E. Other Sections as Applicable.

1.03 REFERENCES

A. ASTM A307 Grade B: Low-Carbon Steel Bolts for Flanged Pipe.

B. ANSI/AWWA C104/A21.4: American National Standard for Cement-Mortar Lining for Ductile Iron and Gray Iron Pipe and Fittings for Water.

C. ANSI/AWWA C105/A21.5: American National Standard for Polyethylene Encasement for Ductile Iron Piping for Water and Other Liquids.

D. ANSI/AWWA C110/A21.10: American National Standard for ductile iron and gray iron fittings 3 inch through 48 inch for Water and Other Liquids.

E. ANSI/AWWA C110/A21.10: American National Standard for ductile iron and gray iron fittings 3 inch through 48 inch for Water and Other Liquids.

F. ANSI/AWWA C150/A21.50: American National Standard for Thickness Design of Ductile Iron Pipe.

G. ANSI/AWWA C151/A21.51: American National Standard for Ductile Iron Pipe, Centrifugally Cast.

H. ANSI/AWWA C153/A21.53: American National Standard for ductile iron compact and gray iron fittings 3 inch through 16 inch for Water and Other Liquids.

I. ANSI/AWWA C600: American Water Works Association Standard for Installation of Ductile Iron Water Mains and Their Appurtenances.

J. ASME/ANSI B16.1: Cast Iron Pipe Flanges and Flanged Fittings, Class 125.

K. ASME/ANSI B16.5: Pipe Flanges and Flanged Fittings, Class 150 (Flat Face Flange).

L. ASME/ANSI B16.42: Ductile Iron Pipe flanges and Flanged Fittings, Class 150 (Flat Face Flange).

M. Ductile Iron Pipe Research Association: Thrust Restraint Design for Ductile Iron Pipe.

1.04 SUBMITTALS

A. Submit a list of materials to be furnished, with the names of the suppliers and the date of delivery.

B. Submit sworn certificates of foundry material and strength tests, and their results. In addition, all ductile iron pipe and fittings may be inspected at the foundry for compliance with the Specifications by an independent testing laboratory selected by the CITY. The manufacturer's cooperation shall be required in these inspections. The cost of foundry inspections requested by the CITY will be borne by the CONTRACTOR.

C. Waiving of the inspection privileges shall not relieve the CONTRACTOR or manufacturer of the responsibility of furnishing pipe and fittings meeting the Specification.

D. Shop Drawings shall be submitted in accordance with Section 01340 and shall include dimensioning, methods and location of supports and all other pertinent technical specifications for all pipe and fittings to be furnished. Shop drawings shall be prepared by the pipe and fittings manufacturer.

E. Manufacturer shall furnish a laying schedule providing a location, type and size of all pipe joints.

PART 2 - PRODUCTS

2.01 ACCEPTABLE MANUFACTURERS

A. Ductile iron pipe and fittings shall be furnished by manufacturers who are fully experienced, reputable, and qualified in the manufacture of the materials. The pipe and fittings shall be designed, constructed, and installed in accordance with the best practices and methods and shall comply with the Specifications in all respects. Acceptable manufacturers include:

1. American Cast Iron Pipe Company
2. Atlantic States Cast Iron Pipe Company
3. Clow Water Systems Company
4. Griffin Pipe Products Company
5. McWane Cast Iron Pipe Company
6. Pacific States Cast Iron Pipe Company
7. United States Pipe and Foundry Company

2.02 COMPRESSION JOINT PIPE AND FITTINGS

A. Pipe shall conform to ANSI/AWWA C151/A21.51 and C150/A21.50.

B. Fittings shall conform to ANSI/AWWA C110/A21.10 & C153/A21.53.

C. Rubber gaskets shall conform to ANSI/AWWA C111/A21.11.

D. Thickness shall be minimum pressure Class 350 through 12" and pressure Class 300 in sizes 14" and larger.

E. Install compression joint pipe below ground. Provide sufficient quantities of lubricant and gaskets.

2.03 MECHANICAL JOINT PIPE AND FITTINGS

A. Pipe shall conform to ANSI/AWWA A21.50/C151 and C150/A21.50.

B. Fittings shall conform to ANSI/AWWA C110/A21.10 & C153/A21.53.

C. Thickness shall be minimum pressure Class 350 through 12" and pressure Class 300 in sizes 14" and larger.

D. Rubber gaskets shall conform to ANSI/AWWA C111/A21.11.

E. Bolts for mechanical joint pipe shall be tee-head design. Nuts and bolts shall be high-strength low alloy steel.

F. Mechanical joint pipe shall be installed below ground.

G. Furnish with sufficient supply of accessories, i.e., gaskets, bolts, and glands, as required for each joint.

2.04 FLANGED JOINT PIPE AND FITTINGS

A. Pipe and fittings shall conform to ANSI/AWWA C115/A21.15.

B. Thickness shall be minimum pressure Class 350 through 12" and pressure Class 300 in sizes 14" and larger.

C. Flanges and flanged fittings shall be flat face conforming to ANSI/AWWA C110/A21.10. Full face 1/8 inch thick rubber ring gaskets shall conform to ANSI/AWWA C110/A21.10.

D. Flanges shall be ductile iron. Cast iron flanges will not be allowed.

E. Flanged ductile iron pipe shall have factory applied screwed long hub flanges. Flanges shall be faced and drilled after being screwed on the pipe, with flanges true to 90 degrees with the pipe axis and shall be flush with end of pipe conforming to ANSI B16.1 Class 125.

F. Bolts for flange pipe shall be low-carbon steel conforming to ASTM A307 Grade B.

G. Flanged joints shall be used for above ground piping and exposed piping in vaults and in indoor pipe galleries.

2.05 GROOVED END PIPE AND FITTINGS

A. Grooved end pipe and fittings shall be acceptable for above-ground installation.

B. Pipe shall conform to ANSI/AWWA C606.

C. Grooved end pipe shall be minimum thickness to conform to former Class 53.

D. Grooved end joints shall be flexible type, radius cut grooved, conforming to AWWA C606.

E. Grooved end fittings shall be ANSI B16.1, radius cut grooved, rigid joint, as manufactured by Victaulic Company, Gustin-Bacon, or approved equal.

F. Grooved end pipe adapter flanges shall be ductile iron, ASTM A536, Victaulic, Gustin-Bacon, or approved equal.

G. Bolts shall be manufactured standard.

H. Gaskets for grooved end joints shall be manufacturer's flush-seal type specifically designed for cast surfaces. Properties shall be as designated in ASTM D 2000. Dimensions shall conform to AWWA C606. Lubricant shall be manufacturer's standard.

I. Install in accordance with manufacturer's printed instructions. Dress cut ends of pipe for couplings and adapters as recommended.

2.06 LININGS AND COATINGS

A. Pipe and fittings for potable water service shall be double thickness cement mortar lining in accordance with ANSI/AWWA C104/A21.4. Cement lining shall be Type 2 Portland Cement, a sulfate resistant cement.

B. Pipe and fittings for wastewater service shall be ceramic epoxy lined with “PROTECTO 401”, or PERMITE 9043 Type 2, or Permox CTF. The lining must be factory applied and warrantied by the pipe manufacturer.

C. Below ground pipe and fittings shall receive a manufacturer's standard bituminous coating per AWWA C151 for ductile iron pipe, AWWA C115 for flange pipe and AWWA C110 for fittings.

D. Pipe and fittings exposed to view in the finished WORK shall not receive the standard bituminous or asphalt coat on the outside surfaces, but shall be shop primed on the outside with one coat of a rust inhibitive primer. Should portions of the pipe inadvertently be given the outside coating of coal tar enamel instead of the rust inhibitive primer as required for exposed piping, the surfaces shall be sealed with a non-bleeding sealer coat. Sealer shall be a part of the WORK of this Section.

E. Pipe and fitting installations in corrosive earth between the limits shown on the DRAWINGS or as required by the ENGINEER shall be fully encased in an 8 mil polyethylene sleeve in accordance with ANSI A21.5 Method "A".

2.07 SPECIAL PIPE AND FITTING

A. Long span flange pipe shall be minimum pressure Class 350. Gaskets shall be Toruseal type with O-ring or equal.

B. Wall castings shall be of the size and types shown on the DRAWINGS and bituminous coated.

C. Flexible joint (ball joint or river crossing) type pipe shall comply with ANSI/AWWA C151/A21.51 and ANSI/AWWA C110/A21.10. Pipe shall provide a variable deflection of up to 15 degrees. The spherical threaded socket shall be manufactured in conformance with AWWA C110 and ANSI B2.1.

2.08 RESTRAINED JOINTS

A. The location and number of restrained joints are shown on the DRAWINGS and details.

B. Joints shall be the standard design of the pipe and fitting manufacturer and shall provide a 2:1 safety factor.

C. Restrained joints shall be designed for a pressure class rating of 350 psi in sizes 4 inch through 12 inch and 300 psi for 14 inch through 64 inch unless shown otherwise on the DRAWINGS.

D. Bolts and nuts for restrained joints shall be low alloy, high strength steel.

E. Restrained joints are to meet the applicable requirements of ANSI/AWWA C110/A21.10 and shall be manufacturer’s standard, Mega lug by EBAA Iron Inc. or approved equal.

PART 3 - EXECUTION

3.01 HANDLING PIPE AND FITTINGS

A. Care shall be taken in loading, transporting and unloading to prevent injury to the pipe or coatings. Pipe or fittings shall not be dropped. All pipe or fittings shall be examined before laying. No piece shall be installed which is found to be defective. Any damage to the pipe coatings shall be required as directed by the ENGINEER.

All pipe and fittings shall be subjected to a careful inspection prior to being laid or installed.

B. If any defective pipe is discovered after it has been laid, it shall be removed and replaced with a sound pipe in a satisfactory manner at no additional expense to the CITY. All pipe and fittings shall be thoroughly cleaned before laying, shall be kept clean until they are used in the WORK, and when installed or until they are used in the WORK, and when installed or laid, shall conform to the lines and grades required.

3.02 LAYING PIPE AND FITTINGS

A. Ductile iron pipe and fittings shall be installed in accordance with requirements of ANSI/AWWA C600 except as otherwise provided herein.

B. All pipe shall be sound and clean before laying. When laying is not in progress, including lunchtime, the open ends of the pipe shall be closed by watertight plugs or other approved means.

C. Suitable excavations shall be made in the trench bottom to receive pipe with raised bells.

D. As soon as the excavation is completed to the normal grade of the bottom of the trench, immediately place screen gravel or crushed stone (where applicable) bedding in the trench, and then the pipe shall be firmly bedded in this material to conform accurately to the line and grade indicated on the DRAWINGS. Blocking under the pipe will not be permitted. Bedding shall conform with Type 2 condition unless otherwise specified.

E. When cutting pipe is required, the cutting shall be done by machine, leaving a smooth cut at right angles to the axis of the pipe. Cut ends of pipe to be used with a "Tyton" type bell shall be beveled to conform to the manufactured spigot end. The lining shall remain undamaged.

3.03 JOINTS

A. Push-on joints shall be made in strict accordance with the manufacturer's instructions. Pipe shall be laid with bell ends looking ahead. A rubber gasket shall be inserted in the groove of the bell end of the pipe, and the joint surfaces cleaned and lubricated. The plain end of the pipe is to be aligned with the bell of the pipe to which it is to be joined, and pushed home with a jack or by other means. After joining the pipe, a metal feeler shall be used to make certain that the rubber gasket is correctly located.

B. Mechanical joints at valves, fittings, and where designated on the DRAWINGS and as specified, shall be in accordance with the "Notes on Method of Installation" under ANSI A21.11 and the instructions of the manufacturer. To assemble the joints in the field, thoroughly clean the joint surfaces and rubber gasket with soapy water before tightening bolts. Bolts shall be tight to the specified torques. Under no condition shall extension wrenches, pipe over handle or ordinary ratchet wrenches be used to secure greater leverage.

C. Ball joints, where designated on the DRAWINGS and as specified, shall be installed in strict accordance with the manufacturer's instructions. Where ball joint assemblies occur at the face of structures or tanks, the socket end shall be at the structure or tank and the ball end assembled to the socket.

D. Flanged joints shall be in accordance with ANSI A21.15 including its Appendix "A" and the instructions of the manufacturer. Flanged joints shall be fitted so that the contact faces bear uniformly on the gasket and then are made up with relatively uniform bolt stress.

E. All valves, hydrants, fittings and other appurtenances needed upon the pipe lines shall be set and jointed as indicated on the DRAWINGS or as required by the manufacturer.

F. Unless otherwise noted, underground piping shall be push-on joint or mechanical joint with restraints as needed and above ground or exposed piping shall be flanged.

G. Deflected bell pipe shown on the DRAWINGS is shown only to assistance in illustrating a preferred means of installation in specific locations, and is not intended to indicate all deflected bell pipe necessary to effect the installation as shown in plan and profile views. The cost of all such deflections shall be included within the bid price for furnishing and installing the pipe.

H. When it is necessary to deflect pipe from a straight line in either the vertical or horizontal plane, or where long radius curves are permitted, the amount of deflection shall not exceed 50% of the maximum deflection allowed by manufacturer.

3.04 RESTRAINED JOINTS

A. Section of piping designated on the DRAWINGS as having restrained joints or those requiring restrained joints shall be constructed using mechanical or compression joint pipe and fittings with restraining devices.

B. Restrained pipe joints that achieve restraint by incorporating cut out sections in the wall of the pipe shall have a minimum wall thickness at the point of cut out that corresponds with the minimum specified wall thickness for the rest of the pipe.

C. The minimum number of restrained joints required for resisting forces at fittings and changes in direction of pipe shall be determined from the length of restrained pipe on each side of fittings and changes in direction necessary to develop adequate resisting friction with the soil. This shall be determined in accordance with the requirements of the Ductile Iron Pipe Research Association: Thrust Restraint Design for Ductile Iron Pipe.

3.05 PIPE THRUST BLOCKS

A. Concrete thrust blocks are not an acceptable alternative to restrained joints. Concrete thrust blocks may only be used on a case-by-case basis as approved by the ENGINEER.

3.06 CLEANING AND FLUSHING

A. The pipe shall be thoroughly cleaned of all foreign matter before installation. It is the CONTRACTOR's responsibility to insure cleanliness of the pipe during installation and backfilling. At the conclusion of the WORK, the CONTRACTOR shall thoroughly clean the entire pipe by flushing with water or other materials which may have entered during the construction period. Debris cleaned from the lines shall be removed from the lowest outlet. If, after this cleaning, obstructions remain, they shall be removed. After the pipe is cleaned, the ENGINEER will examine the pipe for leaks. If defective pipes or joints are discovered at this time, they shall be repaired by the CONTRACTOR.

B. The method required for use is the passage of a sufficient number of "pigs" through the pipeline to effect the cleaning of the system.

C. Passage of the cleaning "pigs" through the system shall be constantly monitored, controlled. Pigs entered into the system shall be individually parked and identified so that their exiting from the system can be confirmed.

D. The CONTRACTOR must demonstrate to the satisfaction of the proper authority(s) that this WORK will be performed by experienced and knowledgeable supervision and personnel who have properly, safely and effectively provided for the cleaning of comparable systems in other applications. These personnel will be required to provide acceptable procedures prior to the WORK being initiated, that will clearly illustrate they are capable

and have the means on hand to resolve potential or real problems that may occur with the cleaning pigs in the system. The CONTRACTOR shall provide evidence of qualification by providing copies of his/her state certification or license to perform such WORK as herein describe. Such documentation shall be included as part of the submittal process.

E. Report Completion: The CONTRACTOR shall provide a written report upon completion of line cleaning to outline and detail information acquired during the cleaning process about the system or to confirm existing information.

F. Cost of pigging the pipelines shall be included in the unit price for furnishing and installing the pipe and fittings. No additional cost for pigging will be allowed.

3.07 PRESSURE & LEAKAGE TESTS

A. Hydrostatic pressure and leakage test shall conform to AWWA C600, with the exception that the CONTRACTOR shall furnish all gauges, meters, pressure pumps and other equipment needed to test the line.

B. The pressure required for the field hydrostatic pressure test shall be minimum 150 psi. The CONTRACTOR shall provide temporary plugs and blocking necessary to maintain the required test pressure. Corporation cocks at least 3/4 inches in diameter, pipe riser and angle globe valves shall be provided at each pipe dead-end in order to bleed air from the line. Duration of pressure test shall be at least two (2) hours. The cost of these items shall be included as a part of testing and is included in the cost to furnish and install pipe and fittings.

C. The leakage test shall be a concurrent test, at the maximum operating pressure as determined by the ENGINEER, with the pressure test and shall be not less than two hours in duration. All leaks evident at the surface shall be repaired and leakage eliminated regardless of total leakage as shown by test. Lines which fail to meet tests shall be repaired and retested as necessary until test requirements are compiled with. Defective materials, pipes, valves and accessories shall be removed and replaced. The pipe lines shall be tested in such sections as may be directed by the ENGINEER by shutting valves or installing temporary plugs as required. The pipe shall be filled with water, all air removed and the test pressure maintained in the pipe for the entire test period by means of a force pump to be furnished by the CONTRACTOR. Accurate means shall be provided for measuring the water required at this pressure. The amount of water required is a measure of the leakage.

D. The amount of leakage which will be permitted shall be in accordance with AWWA C600 for all pressure lines.

E. The CONTRACTOR must submit his plan for testing to the ENGINEER for review at least ten (10) days before starting the test. The CONTRACTOR shall remove and adequately dispose of all blocking material and equipment after completion and acceptance of the field hydrostatic test, unless otherwise directed by the ENGINEER. Any damage to the pipe coating shall be repaired by the CONTRACTOR. Lines shall be totally free and clean prior to final acceptance.

3.08 DISINFECTING

A. Before being placed in service, all potable water pipelines shall be chlorinated in accordance with AWWA C651, "Standard Procedure for Disinfecting Water Mains." The procedure shall be approved by the ENGINEER. The location of the chlorination and sampling points will be

determined by the ENGINEER in the field. Taps for chlorination and sampling shall be uncovered and backfilled by the CONTRACTOR as required.

B. The general procedure for chlorination shall be first to flush all dirty or discolored water from the lines, and then introduce chlorine in approved dosages through a tap at one end, while water is being withdrawn at the other end of the line. The chlorine solution shall remain in the pipeline for at least 24 hours.

C. Following the chlorination period, all treated water shall be flushed from the lines at their extremities and replaced with water from the distribution system. Bacteriological sampling and analysis of the replacement water shall then be made by the ENGINEER in full accordance with AWWA C651. The CONTRACTOR will be required to re-chlorinate, if necessary. The line shall not be placed in service until the requirements of the State and County Public Health Department are met.

D. Special disinfecting procedures shall be used in connections to existing mains, and where the method outlined above is not practical.

E. The CONTRACTOR shall make all arrangements necessary with the County Health Department for the collection and examination of samples of water from disinfected water mains. These samples shall be examined for compliance with Department of Health and Rehabilitative Services requirements. Sampling shall be made daily and continuously until two successive examinations are found satisfactory. If unsatisfactory, the line shall be flushed and disinfected again. The cost of sampling, flushing and disinfecting shall be included in the contract price and no additional charge shall be made to the CITY for this WORK.

END OF SECTION

SECTION 02503 PIPELINE TESTING

PART 1 - GENERAL

1.01 REQUIREMENTS INCLUDED

A. The CONTRACTOR shall perform flushing and testing of all pipelines and appurtenant piping, complete, including conveyance of test water from CITY-designated source to point of use and all disposal thereof, all in accordance with the requirements of the Contract Documents.

B. Perform specified services with CONTRACTOR's qualified personnel, or employ and pay for a qualified organization to perform specified services.

C. Pressure and Piping Systems.

1.02 DESCRIPTION

A. Perform testing of piping systems in accordance with the latest edition of AWWA and as specified below.

B. Provide instrument required for testing of piping systems.

1. Make instruments available to the ENGINEER to facilitate spot checks during testing.
2. Retain possession of instruments; remove from site at completion of services.

C. Provide all water required for flushing and testing. The CONTRACTOR shall obtain a construction meter from the CITY at current rates and pay for meter rental and all water used.

D. Provide all necessary pumping equipment and other equipment, materials and facilities required for proper completion of the flushing and testing specified.

E. Source and quality of water, procedure, and test equipment shall be acceptable to the ENGINEER. Length of tested line shall not exceed 2,000 feet.

F. All tests shall be made in the presence of the ENGINEER. Notify ENGINEER at least 48 hours before any WORK is to be inspected or tested.

G. If inspection or test shows defects, the piping system(s) shall be repaired or replaced and inspection repeated, until such piping is acceptable to the ENGINEER.

H. All pipe, fittings, valves, and joints shall be carefully examined during test. Leaky joints shall be tightened by remaking the joint.

I. Sections of the system may be tested separately. It shall be distinctly understood that any defect which may subsequently develop in section already tested and accepted shall promptly be corrected and that section retested.

J. Disposal of the water used for testing shall be subject to the approval of the ENGINEER.

1.03 QUALITY ASSURANCE

A. The organization which performs the testing shall, prior to testing, provide their qualifications and demonstrate their ability to perform the services to the satisfaction of the ENGINEER.

1.04 SUBMITTALS

A. Preliminary

1. Submit three copies of documentation to confirm compliance with Quality Assurance provisions:
   a. Organization supervisor and personnel training and qualifications.
   b. Specimen copy of each of the report forms proposed for use.

B. At least fifteen days prior to CONTRACTOR's request for final inspection, submit three copies of final reports on applicable reporting forms, for review.

1. Each individual final reporting form must bear the signature of the person who recorded data and that of the supervisor of the reporting organization.
2. Identify instruments of all types which were used and last date of calibration of each.

1.05 JOB CONDITIONS

A. Prior to start of testing of piping systems, verify that required "Job Conditions" are met:

1. System or system element installation is complete.
2. All required materials, water, instruments, etc. are on hand.
3. All other preparations are completed.

1.06 TESTING PROCEDURES

A. Domestic and Small Diameter Process Systems Test: Not Used.

B. Interior Drainage System: Not Used.

C. Gravity Sewer System:

1. Deflection Testing
   a. PVC pipe shall be tested for excessive deflection by means of a "Go, No-Go" mandrel or sewer ball. A 7 1/2% Deflection Mandrel shall be pulled through each manhole section to determine if excessive deflection has taken place. If the mandrel fails to be pulled through the sewer pipe, the CONTRACTOR shall attempt to pull the mandrel through from the other end of the manhole section. If the mandrel fails to be pulled through, again, the CONTRACTOR shall repair or replace that portion of the sewer main which has exceeded the 7 1/2% allowable pipe deflection.
   b. The Deflection Mandrel to be used for testing shall be submitted to the ENGINEER for approval prior to use. Each mandrel shall be constructed and utilized in accordance with the Uni-Bell Handbook of P.V.C. Pipe and the North American Pipe Corporation.
   c. Deflection Testing shall not take place until thirty days following the final backfilling over the pipe. This will allow time for settlement of all the backfill material. The ENGINEER's representative shall be present at all deflection tests.
   d. As an alternative to Deflection Mandrel testing, deflection testing may be performed by lamping if approved by the CITY and ENGINEER. Sewer lamping shall be witnessed by the ENGINEER and a representative from the CITY.
2. Exfiltration and Infiltration Testing
   a. Leakage tests by exfiltration and infiltration, as described below, will be

made on all pipe. The ENGINEER shall have the option of determining which test(s) shall be employed. Generally, if the groundwater table is below the bottom of the pipe an exfiltration test shall be used. All other pipe shall be tested for infiltration.

b. Exfiltration Test

1) Exfiltration tests will be made on the pipe before or after backfilling at the discretion of the ENGINEER. The length of the sewer to be tested shall be such that the head over the crown of the upstream end is not less than 2 feet and the head over the downstream crown is not more than 6 feet unless directed otherwise by the ENGINEER. The sewer shall be plugged by pneumatic bags or mechanical plugs in such a manner that the air can be released from the sewer while it is being filled with water. The test shall be continued for one hour and provisions shall be made for measuring the amount of water required to maintain the water at a constant level during this period. If test results are unsatisfactory, the ENGINEER may direct that additional tests are made on any or all of the pipe.

2) If any joint shows an appreciable amount of leakage, the jointing material shall be removed and joint remade. If any pipe is defective, it shall be removed and replaced. No amount of leakage will be accepted. If the amount of leakage indicates defective joints or broken pipes, they shall be corrected by the CONTRACTOR.

c. Infiltration Test

1) Pipe shall be tested for infiltration after the backfill has been placed. Infiltration tests shall be made under the supervision of the ENGINEER, and the length of line to be tested shall be as directed by the ENGINEER. There shall be no allowable leakage.

2) Manhole exfiltration leakage shall not exceed 4 gallons per day per unit.

3) Sewer pipe exfiltration leakage shall not exceed 10 gallons per day per inch diameter per mile in a two hour test period for any length of section tested.

4) Visible manhole or sewer pipe infiltration leakage shall not be acceptable.

5) Rates of infiltration shall be determined by means of a V- notch weir to be provided and installed by the CONTRACTOR in an approved manner, and at such times and locations as may be directed by the ENGINEER.

6) If an inspection of the completed sewer or any part thereof shows any manholes, pipes, or joints which allow the infiltration of water in a noticeable stream or jet, the defective WORK or material shall be replaced or repaired as directed.

7) All water used in testing and flushing shall be furnished at the CONTRACTOR's expense.

3. The sanitary sewer system shall be televised prior to final acceptance by the ENGINEER or the CITY. Video recording and reporting shall be reviewed. The CONTRACTOR shall be responsible for correcting any deficiencies prior to acceptance by the CITY or submittal to any permitting agency. Testing and corrections shall be at the CONTRACTOR's expense.

D. Exterior and Interior Piping Systems:

1. Exterior and interior piping shall pass a hydrostatic pressure test and a leakage test as defined below before acceptance. The pressure and leakage test shall be made after all jointing operations are completed and after backfilling is completed. All concrete reaction blocks, or other bracing and restraining facilities, shall be in place at least 14 days before the initial filling of the line.
2. The pressure and leakage tests may be applied to an individual section of line isolated between the existing line valves, or may be applied to shorter sections of line at the CONTRACTOR's option. If shorter sections are tested, test plugs or bulkheads as required at the ends of the test section shall be furnished and installed by the CONTRACTOR at his expense, together with all anchors, braces, and other devices required to withstand the hydrostatic pressure on such plug or plugs, without imposing any hydraulic thrust on the pipe line or any part thereof. The CONTRACTOR shall be solely responsible for any and all damage to the pipe line, and/or to any other facility, which may result from the failure of test plugs furnished by him or supports therefore, in any case.
3. Hydrostatic Tests:
   a. The section of line to be tested shall be slowly filled with water and all air expelled from the pipe. Care shall be taken that all air valves are installed and open in the section being filled, and that the rate of filling does not exceed the venting capacity of the airvalves.
   b. Hydrostatic test pressure shall be as follows:

System	Testing
Wastewater Force Main	150 PSI
Potable Water	150 PSI
Other Pressure Pipe	1.5x Max Operation Pressure

   c. After the pipe has been laid, all newly laid pipe of any valved section thereof shall be subjected to a hydrostatic pressure test.
      1) Test pressure shall:
         i. Not exceed pipe or thrust-restraint design pressures.
         ii. Be of at least 2-hour duration.
         iii. Not vary by more than ±5 psi (0.35 Bar) for the duration of the test.
         iv. Not exceed twice the rated pressure of the valves or hydrants when the pressure boundary of the test section includes closed gate valves or hydrants. NOTE: Valves shall not be operated in either direction at differential pressures exceeding the rated pressures.
         v. Not exceed the rated pressure of the valves when the pressure boundary of the test section includes closed valves.
      2) Each valved section of pipe shall be filled with water slowly and the specified test pressure based on the elevation of the lowest point of the line or section under test and corrected to the elevation of the test gauge shall be applied by means of a pump connected to the pipe in a manner satisfactory to the ENGINEER. Valves shall not be operated in either the opening or closing direction at differential pressures above the rated pressure. The system shall be allowed to stabilize at the test pressure before conducting the leakage test.

d. Examination. Any exposed pipe, fittings, valves, hydrants, and joints shall be examined carefully during the test. Any damaged or defective pipe fittings, valves, or hydrants that are discovered following the pressure test shall be repaired or replaced with sound material and the test shall be repeated until it is satisfactory to the ENGINEER.

1) Leakage Test

i. A leakage test shall be conducted concurrently with the pressure test. Leakage shall be defined as the quantity of water that must be supplied into the newly laid pipe, or valved section thereof, to maintain pressure within 5 psi (0.35 Bar) of the specified test pressure after the air in the pipeline has been expelled and the pipe has been filled with water. Leakage SHALL NOT BE MEASURED BY A DROP IN PRESSURE IN A TEST SECTION OVER A PERIOD OF TIME.

ii. No pipe installation will be accepted if the leakage is greater than that determined by the following formula:

$$L = \frac{SD * P^{1/2}}{148{,}000}$$

In which L is the allowable leakage, in gallons per hour; S is the length of pipe tested in feet; D is the nominal diameter of the pipe in inches; and P is the average test pressure during the leakage test in pounds per square inch.

(a) To obtain leakage in liter/hour, multiply the values in the table by 3.785.

(b) When testing against closed metal-seated valves, an additional leakage per closed valve of 0.0078 gal/h/in (0.0012 L/h/mm) of nominal valve size shall be allowed.

(c) When hydrants are in the test section, the test shall be made against the closed hydrant.

(d) Acceptance shall be determined on the basis of allowable leakage. If any test of pipe laid discloses leakage greater than that specified in Section “b” above, CONTRACTOR shall, at his own expense, locate and make repairs as necessary until the leakage is within the specified allowance.

(e) All visible leaks are to be repaired regardless of the amount of leakage.

PART 2 – PRODUCTS

2.01 MATERIALS REQUIREMENTS

A. All test equipment, temporary valves or bulkheads, temporary vents or drains, or other water control equipment and materials shall be determined and furnished by the CONTRACTOR subject to the CONSULTANT & CITY'S review. No materials shall be used which would be injurious to the construction or its future function.

PART 3 - EXECUTION

3.01 GENERAL

A. Prior to testing, pig and flush all piping systems with water to remove all debris in the system. Pigging of lines 12" and smaller is not required unless the line becomes contaminated.

B. For testing refer to the Testing Procedures above.

C. No separate payment for testing shall be made.

END OF SECTION

SECTION 02504 VALVES, GENERAL

PART 1 – GENERAL

1.01 THE REQUIREMENT

A. The CONTRACTOR shall furnish and install, complete with all assemblies and accessories, all valves shown on the DRAWINGS and specified herein including all fittings, appurtenances and transition pieces required for a complete and operable installation.

B. The provisions of this Section shall apply to all valves and valve operators specified in the various Sections of these Specifications except where otherwise specified in the Contract Documents. Valves and operators in particular locations may require a combination of units, sensors, limit switches, and controls specified in other sections of these Specifications.

C. The equipment shall include the following:

1. Air Release Valves
2. Backflow Prevention Assembly
3. Butterfly Valves
4. Detector Tape
5. Flanged Coupling Adapters
6. Flexible Connectors
7. Link Seals and Wall Sleeves
8. Plug Valves
9. Pressure Gauge Assembly
10. Resilient Seat Ball Valves
11. Retainer Glands
12. Strainers
13. Service Connections
14. Tapping Sleeves
15. Unions
16. Valve Boxes
17. Dresser Couplings

1.02 RELATED SECTIONS

A. Section 02221 – Trenching Bedding Backfill for Pipe

B. Section 02501 – Piping, General

C. Section 02502 – Ductile Iron Pipe and Fittings

1.03 REFERENCES

A. ASME B16.1 - Cast Iron Pipe Flanges and Flanged Fittings, Class 25, 125, 250, and 800.

B. ANSI B16.5 - Pipe Flanges and Flanged Fittings, Steel Nickel Alloy and Other Special Alloys.

C. ANSI/ASME Bl.20.1 - General Purpose Pipe Threads (Inch).

D. ANSI/ASME B31.1 - Power Piping.

E. ASTM A 36 - Specification for Structural Steel.

F. ASTM A 48 - Specification for Gray Iron Castings.

G. ASTM A 126 - Specification for Gray Iron Castings for Valves, Flanges, and Pipe Fittings.

H. ASTM A 536 - Specification for Ductile Iron Castings.

I. ASTM B 61 - Specification for Steam or Valve Bronze Castings.

J. ASTM B 62 - Specification for Composition Bronze or Ounce Metal Castings.

K. ASTM B 148 - Specification for Aluminum Bronze Castings.

L. ASTM B 584 - Specification for Copper Alloy Sand Castings for General Applications.

M. ANSI/AWWA C500 - Gate Valves for Water and Sewerage Systems.

N. ANSI/AWWA C504 - Rubber Seated Butterfly Valves.

O. AWWA C508 - Swing Check Valves for Waterworks Service, 2 Inches through 24 Inches NPS.

P. ANSI/AWWA C509 - Resilient Seated Gate Valves, 3 through 12 NPS, for Water and Sewage Systems.

Q. AWWA C550 - Protective Interior Coatings for Valves and Hydrants.

R. ANSI/AWWA C900 - Polyvinyl Chloride (PVC) Pressure Pipe and Fabricated Fittings, 4 in. through 12 in. (100 mm through 300 mm), for Water Transmission and Distribution.

S. ANSI/AWWA C905 - Polyvinyl Chloride (PVC) Pressure Pipe and Fabricated Fittings, 14 in. through 48 in. (350 mm through 1200 mm), for Water Transmission and Distribution.

T. ANSI/AWWA C906 – AWWA C906 Polyethylene (PE) Pressure Pipe & Fittings - 4 Inch through 63 Inch for Water Distribution

U. Manufactures Standardization Society (MSS) for the Valve and Fitting Industry

V. Other references as stated below.

1.04 QUALIFICATIONS

A. Valves and appurtenances shall be products of well-established reputable firms who are fully experienced, and qualified in the manufacture of the particular equipment to be furnished in the business of manufacturing of the specific product for a minimum of ten (10) years. The equipment shall be designed, constructed, and installed in accordance with the best practices and methods and shall comply with these specifications, as applicable.

1.05 SUBMITTALS

A. Shop Drawings: Shop Drawings conforming to the requirements of Section 01340 – Shop Drawings, Working Drawings and Sample, are required for all valves, and accessories. Submittals shall include all layout dimensions, size and materials of construction for all components, information on support and anchoring where necessary, pneumatic and hydraulic characteristics and complete descriptive information to demonstrate full compliance with the Documents. Shop Drawings for electrically operated/controlled valves shall include all details, notes, and diagrams which clearly identify required coordination with the electrical power supply and remote status and alarm indicating devices. Electrical control schematic diagrams shall be submitted with the Shop Drawings for all electrical controls. Diagrams shall be drawn using a ladder-type format in accordance with JIC standards. Shop Drawings for pneumatically operated/controlled valves shall include all details, notes, and diagrams which clearly identify required coordination with the compressed air (service air) system and electrical controls.

B. Operation and Maintenance Manuals: Operation and maintenance manuals and installation instructions shall be submitted for all valves and accessories in accordance with the

Specifications. The manufacturer(s) shall delete all information which does not apply to the equipment being furnished.

C. Valve Labeling: The CONTRACTOR shall submit a schedule of valves to be labeled indicating in each case the valve location and the proposed wording for the label.

1.06 TOOLS

A. Special tools, handles, or wrenches, if required for normal operation and maintenance of the specified valves, shall be supplied with the equipment furnished.

1.07 SUBSTITUTIONS

A. Substitutions are not permitted unless otherwise stated.

B. All valves and appurtenances shall be of the size of the valve being replaced and all similar valves shall be from one manufacturer.

C. Valves and appurtenances shall have the name of the manufacturer and the working pressure for which they are designed cast in raised letters upon some appropriate part of the body.

PART 2 - PRODUCTS

2.01 AIR RELEASE VALVES

A. Sewer Force Main Air Release Valves – System shall be a combination of one sewage air release valve and one sewage air/vacuum valve with dual isolation plug valves.

Valve bodies and covers shall be of cast iron construction in accordance with ASTM A126-B. All internal parts shall be of stainless steel, ASTM A240 - Type 304 and ASTM A276 - Type 303. The venting orifice shall be 5/16" in diameter with stainless steel seat. The inlet openings shall be a minimum of 2" NPT screwed connection for both valves. The valves shall be fully capable of operation in sewage force main. Both valves shall include a back-flushing feature for periodic cleaning of the internal mechanism. The overall height shall not exceed 22 inches. Valves shall be manufactured by Val-Matic Corporation, or approved equal.

B. Water Main Air Release Valves – Valve body and cover shall be of cast iron construction, per ASTM A126-B. All internal parts shall be of stainless steel, ASTM A240 – Type 304 for the float, and ASTM A296 – Type 316 for the linkage. The venting orifice shall be 3/16" diameter with brass seat. The inlet opening shall be a 2" NPT screwed connection. The overall height shall not exceed 13 inches. Valves shall be manufactured by Valve and Primer Corporation, model number APCO 200A, or approved equal.

2.02 BACKFLOW PREVENTION ASSEMBLY

A. The assembly shall conform to the latest revision of ANSI/AWWA C510 and shall be capable of withstanding a working pressure of at least 150 psi without damage to working parts or impairment of function. It shall consist of two internally loaded, independently operating check valves, located between two tightly closing resilient- seated shut off valves, with four properly placed resilient-seated test cocks.

2.03 BUTTERFLY VALVES

A. Butterfly valves and operators shall conform to the latest revision of ANSI/AWWA C504 standard for rubber-seated butterfly valves. Valves shall be Class 150 A or B, and shall be Mueller, Pratt, Clow, DeZurik, or approved equal.

2.04 DETECTOR TAPE

A. Detector tape shall be 3" wide, blue tape for water mains, green tape for force mains, with a metallized foil core laminated between 2 layers of plastic film. The words "CAUTION WATER LINE BURIED BELOW" or "CAUTION FORCE MAIN BURIED BELOW" shall be printed at 30" intervals along the tape. Tape shall be placed 18" below grade above all PVC mains and services, or as recommended by manufacturer. Non-metallic tape shall be used above ductile iron pipe.

2.05 FLANGED COUPLING ADAPTERS

2.06 Coupling adapters shall be Smith-Blair Model No. 912. Body and follower flange shall be iron. Bolt circle sizes and spacing shall conform to ASA 125 flange. Gasket shall be Smith-Blair Grade 30 or 60. O-Rings shall be Grade 60. Cross and tee bolts shall conform to ANSI A21.11.FLEXIBLE CONNECTOR

A. Flexible connectors or rubber expansion joints shall be spool type containing elastomers woven with nylon fabric and nylon tire core cord reinforced with wire.

B. Elastomers shall be nitrile (BUNA-N) unless otherwise depicted on the DRAWINGS.

C. All elastomers design for exterior applications shall have a factory applied UV coating.

D. Backing plates and hardware shall be 316L stainless steel.

E. Flexible connectors shall be manufactured by Proco series 230 or Approved Equal.

2.10 LINK SEALS & WALL SLEEVES

A. The pipe-to-wall penetration closures shall be "Link-Seal" as manufactured by Thunderline Corp., Belleville, MI 48111. Seals shall be modular mechanical type, consisting of interlocking synthetic rubber links shaped to fill continuously the annular space between the pipe and wall opening. Links shall be loosely assembled with bolts to form a continuous rubber belt around the pipe with a pressure plate under each bolt head and nut. Seals shall be installed such that bolt heads are facing the inside of the structure and shall be accessible from grade without the need for excavation. After the seal assembly is positioned in the wall sleeve, tightening of the bolts shall cause the rubber sealing elements to expand and provide an absolutely water-tight seal between the pipe and wall opening. The seal shall be constructed so as to provide electrical insulation between the pipe and wall, thus reducing chances of cathodic reaction between these two members.

B. The CONTRACTOR shall determine the required inside diameter of each individual wall sleeve before ordering, fabricating or installing. The inside diameter of each wall sleeve shall be sized as recommended by the manufacturer to fit the pipe and Link- Seal to assure a water-tight joint.

C. Wall sleeve shall be specially designed to mate with the Link-Seal. The wall sleeve shall be heavy wall welded or seamless steel pipe. The sleeve shall have a full-circle continuously-welded water stop plate on the sleeve O.D. which acts as the sleeve anchor and water stop. Wall sleeve shall be model WS by Thunderline Corp.

2.11 PLUG VALVES

A. Plug valves shall be non-lubricated eccentric type with resilient faced plugs, and shall be furnished with end connections as shown on the plans. Flanged valves shall be faced and drilled in conformance with ANSI B16.1 Class 125 standard. Mechanical joint ends shall be in conformance with AWWA C111. Bell ends shall be in conformance with AWWA C100 Class B.

B. Unless otherwise specified on the plans, port areas for all valves shall be min. 80% of full pipe area.

C. Valve bodies shall be of ASTM A126 Class B cast iron in compliance with AWWA Standard C507 Section 5.1 and AWWA Standard C504. All exposed nuts, bolts, springs, washers, etc. shall be zinc plated. Resilient plug facings shall be Neoprene or Buna-N, on a single piece plug. The plug shall be of sufficient construction so that no strengthening member is required opposite the face.

D. Valves shall be furnished with corrosion resistant seats which comply with AWWA Standard C507 Section 7 paragraph 7.2 and with AWWA Standard C504 Section 3.5. The seat shall be in the body only. Seat ring shall be adjustable and replaceable.

E. Valves shall be furnished with replaceable, sleeve-type bearings in the upper and lower journals. These bearings shall comply with AWWA Standard C507 Section 8 paragraphs 8.1, 8.3 and 8.5 and with AWWA Standard C504 Section 3.6.

F. Valve shaft seals or packing shall be adjustable and replaceable without removing the valve from service or interrupting service with flow in either direction. Shaft seals shall comply with AWWA Standard C507 Section 10 and with AWWA C507 Section 111.

G. Valve pressure ratings shall be as follows and shall be established by hydrostatic tests as specified by ANSI Standard B16.1. Pressure ratings shall be 175 psi for valves through 12", 150 psi for valves in sizes 14" through 36" and 125 psi for valves in sizes 42" through 54". Valves shall be capable of providing drip-tight shutoff up to the full valve rating with pressure in either direction.

H. All valves 8 inches and larger shall be equipped with gear actuators. All gearing shall be enclosed and suitable for running in oil, with seals provided on all shafts to prevent entry of dirt and water into the actuator. All shaft bearings shall be furnished with permanently lubricated bronze bearing bushings. Actuator shall clearly indicate valve position. An adjustable stop shall be provided. Construction of actuator housing shall be cast iron or steel.

I. Plug valves installed such that actuators are 6 feet or more above the floor shall have chain-wheels and chains provided.

J. For plug valves with extended shafts and actuators, the actuators shall be mounted on floor stands where indicated on the DRAWINGS or shall have removable hand- wheels where floor stands are not called for. Six inch sleeves shall be provided for extended shafts in all floors. Where necessary, covers shall be provided. Shafts shall be of adequate strength to operate the valve. Floor stands and covers, where called for, shall be cast iron. Floor stands shall be equipped with valve position indicators and a lock for the hand-wheel.

K. All plug valves shall be installed so that the direction of flow through the valve is in accordance with the manufacturer's recommendations.

L. Valves and actuators shall be as manufactured by DeZurik.

2.12 PRESSURE GAUGE ASSEMBLY

A. Pressure gauge shall be direct-mounted with a minimum 4-1/2 inch diameter dial with a clear glass crystal window constructed to the following standards:

1. Accuracy – 1% full scale grade A ASME B40, 100

2. Weather Protection – Dry Case International Protection Rating (IP) IP54

3. Fill - Glycerin filled, hermetically sealed IP65
4. Case type – Open front 304 stainless steel case
5. Dial – Aluminum dial, brushed aluminum background, black figures and graduations.
6. Bourdon Tube and Socket – 316L/316L Stainless steel
7. Scale and range – As depicted on DRAWINGS.
8. Manufacture – ISO 9001 registered.
9. Pressure gauge shall be manufactured by Ashcroft Type 1009 or Approved Equal

B. All pressure gauges for wastewater applications shall be mounted to a Pressure Sensor.

1. Pressure Sensors shall be of the wafer type, designed to fit between standard ANSI B16.1 Class125/ANSI B16.5 Class 150 pipeline flanges. The face-to-face of the entire sensor shall be no longer than specifications for butterfly valves - MSS-SP67.
2. Pressure Sensors shall be flow through design with a nitrile (BUNA-N) elastomer sensing ring around the full circumference. There shall be no dead ends or crevices, and flow passage shall make the sensor self-cleaning.
3. The sensing ring shall have a cavity behind the ring filled with ethylene glycol fluid to transfer pressure to the gauge.
4. Pressure Sensor shall be manufactured by Red Valve Series 48 or Approved Equal

C. Pressure gauge assembly shall include ½" brass fittings, ball valves, snubbers or gauge guards as depicted on the DRAWINGS.

2.13 RESILIENT SEAT BALL VALVE

A. Ball valve shall be tight closing, shaft-mounted complying with Fed. Spec. WW-V-35, Type II, Class C, Style 3. Valve design shall eliminate metal-to-metal contact or wedging in the sealing action. Design pressure rating shall be greater than 150 psi.

B. Valve body shall be one- or two-piece stainless steel ASTM A351. Ball shall be stainless steel ASTM A276. Seat ring shall be reinforced TFE.

C. Valve shall have a stainless steel 1/4 turn lever arm. Ends shall be threaded. Ball valve shall be Figure No. T-580-S6-R-66 as manufactured by Nibco, Inc. or equal.

2.14 RETAINER GLANDS

A. Retainer glands shall conform to the latest revision of ANSI/AWWA C111/A21.11. All glands shall be manufactured from ductile iron as listed by Underwriters

Laboratories for 250 psi minimum water pressure rating, manufactured by Clow Corporation, EBAA Iron, or approved equal.

2.15 STRAINERS

A. Strainers shall be of the "Y" type, shall have bronze bodies with a removable bronze screen, and shall be as manufactured by Watts Regulator Company, Lawrence, MA.

2.16 SERVICE CONNECTIONS

A. Service saddles shall be Ductile Iron, epoxy or nylon coated, with double stainless steel straps, or a single wide strap. Saddles shall conform to the latest revisions of ANSI/AWWA C111/21.11 and ASTM A588.

B. Service lines shall be polyethylene (PE) tubing as described in ANSI/AWWA C901, latest revision, with a working pressure of 200 psi (DR 9). Pipe joints shall be of the compression type, with totally confined grip seal and coupling nut. Polyethylene shall be extruded from PE 3408 high molecular weight materials and must conform to ASTM D2737.

C. Corporation stops shall be manufactured of brass alloy in accordance with ASTM B62 with threaded ends and shall be Ford or approved equal.

D. Meter stops shall be the 90 degree lockwing type and shall be of bronze construction in accordance with ASTM B62. Meter stops shall be closed button design, with a resilient "O" ring, sealed against external leakage at the top. Stops shall be equipped with a meter coupling nut on the outlet side, as manufactured by Mueller, Ford or approved equal.

E. All meters (2 1/2" and smaller) and meter boxes will be supplied and installed by the CITY at the CITY's expense. Meters larger than 2 ½ inches will have special installation requirements.

2.17 TAPPING SLEEVES

A. Tapping sleeves shall be ductile iron or stainless steel, mechanical or joint, as stated on the DRAWINGS, manufactured by Clow, or approved equal.

2.18 UNIONS

A. Unions on ferrous pipe, 2 inch diameter and smaller, shall be 150 lb malleable iron, and zinc-coated. Unions on water piping, 2 1/2 inch diameter and larger, shall be 125 lb pound flange pattern, and zinc-coated. Gaskets for flanged unions shall be of the best quality fiber or plastic. Unions shall not be concealed in walls, ceilings, or partitions.

2.19 VALVE BOXES

A. Valve boxes for water mains and sewer force mains shall be U.S. Foundry Model 7500, marked "Water" or "Sewer", or approved equal.

B. Valve boxes for blow-off assembly shall be U.S. Foundry Model 7630 (No. 3) or approved equal.

2.20 PIPE COUPLINGS

A. Pipe couplings shall be style 38 all 316L stainless steel by Piping Specialties Dresser, Inc.

PART 3 - EXECUTION

3.01 INSTALLATION

A. Valves and appurtenances shall be installed in the locations shown, true to alignment and rigidly supported. Any damage to the above items shall be repaired to the satisfaction of the ENGINEER before they are installed.

B. Install floor boxes, brackets, extension rods, guides, and the various types of operators and appurtenances that are in masonry floors or walls, and install concrete inserts for hangers and supports as soon as forms are erected and before concrete is poured. Before setting these items, the CONTRACTOR shall check all plans and figures having direct bearing on the locations of the valves and appurtenances, and he shall be responsible for the proper location of these items during the construction of the structures.

C. Flanged joints shall be made with hot-dipped galvanized bolts, nuts and washers. Mechanical joints shall be made with mild corrosion-resistant alloy steel bolts and nuts. All

exposed bolts shall be painted the same color as the pipe. All buried bolts and nuts shall be heavily coated with two (2) coats of bituminous paint.

D. Prior to assembly of split couplings, the grooves and other parts shall be thoroughly cleaned. The ends of the pipes and the outsides of the gaskets shall be moderately coated with petroleum jelly, cup grease, soft soap or graphite paste, and the gasket shall be slipped over one pipe end. After the other pipe has been brought to the correct position, the gasket shall be centered properly over the pipe ends with the lips against the pipes. The housing sections shall then be placed. After the bolts have been inserted, the nuts shall be tightened until the housing sections are firmly in contact, metal-to-metal, without excessive bolt tension.

E. Prior to the installation of sleeve-type couplings, the pipe ends shall be cleaned thoroughly. Soapy water may be used as a gasket lubricant. A follower and gasket, in that order, shall be slipped over each pipe to a distance of about 6 inches from the end, and the middle ring shall be placed on the already laid pipe end until it is properly centered over the joint. The other pipe end shall be inserted into the middle pipe already laid. The gaskets and followers shall then be pressed evenly and firmly into the middle ring flares. After the bolts have been inserted and all nuts have been made up fingertight, diametrically opposite nuts shall be progressively and uniformly tightened all around the joint, preferably by use of a torque wrench of the appropriate size and torque for the bolts.

3.02 SHOP PAINTING

A. Ferrous surfaces of valves and appurtenances shall receive an exterior coating of rust-inhibitive primer. Interior coatings shall be the manufacturer's standard except that valves for potable water lines shall be coated with paints approved by EPA, FDA and AWWA for potable water service. All pipe connection openings shall be capped after shop painting to prevent the entry of foreign matter prior to installation.

3.03 FIELD PAINTING

A. All above ground valves and appurtenances shall be painted in accordance with DRAWINGS.

3.04 INSPECTION AND TESTING

A. Completed pipe shall be subjected to hydrostatic pressure test for 2 hours at 150% full working pressure. All leaks shall be repaired and lines retested until approved by the ENGINEER.

END OF SECTION

SECTION 02505 – AWWA C900/C905 PIPE

PART 1 – GENERAL

1.01 THE REQUIREMENT

A. The CONTRACTOR shall furnish and install 4-inch to 48-inch polyvinyl chloride (PVC pressure pipeline, complete in place, all in accordance with the requirements of the Contract Documents.

1.02 RELATED WORK SPECIFIED ELSEWHERE

A. Section 2501 - Piping, General

B. Section 2503 - Pipeline Testing

1.03 REFERENCED SPECIFICATIONS, CODES, AND STANDARDS

A. Commercial Standards:

ANSI/AWWA C104/A21	Cement Mortar Lining for Ductile Iron Pipe and Fittings for Water
ANSI/AWWA C110/A21	Ductile Iron and Gray Iron Fittings 3-inch through 48-inch for Water and other Liquids
ANSI/AWWA C111/A2	Rubber Gasket Joints for Ductile Iron and Gray Iron Pressure Pipe and Fittings
ANSI/AWWA C600	Installation of Ductile Iron Water Mains and Appurtenances
ANSI/AWWA C900	Polyvinyl Chloride (PVC) Pressure Pipe 4-inch through 12-inch for Water
ANSI/AWWA C905	Polyvinyl Chloride (PVC) Pressure Pipe 14-inch through 48-inch for Water
ASTM D 2584	Test Method for Ignition Loss of Cured Reinforced Resins
PPI Technical Report TR ¾	Policies and Procedures for Developing Recommended Hydrostatic Design Stresses for Thermoplastic
AWWA Manual M23	PVC Pipe – Design and Installation

1.04 SUBMITTALS

A. Shop Drawings: The CONTRACTOR shall submit Shop Drawings of pipe and fittings and appurtenances in accordance with the requirements in the Section 01340 - Shop Drawings, Working Drawings and Samples.

B. Certifications

1. The CONTRACTOR shall furnish a certified affidavit of compliance for all pipe and other products or materials furnished under this Section of the Specifications, as specified in the referenced standards.
2. All expenses incurred in making samples for certification of tests shall be borne by the CONTRACTOR

1.05 QUALITY ASSURANCE

A. Tests: Except as modified herein, all materials used in the manufacture of the pipe shall be tested in accordance with the requirements of this Section of the Specifications, as specified in the referenced standards, as applicable.

B. In addition to those tests specifically required, the ENGINEER may request additional samples of any material for testing by the CITY. The additional samples shall be furnished at no additional cost to the CITY.

PART 2 – PRODUCTS

2.01 GENERAL

A. Approved PVC pipe manufacturers are:

1. Diamond Plastic
2. Freedom Plastic
3. Griffico
4. JM Eagle
5. IPEX
6. National
7. Napco
8. Or equal

B. PVC pressure pipe (4-inch through 12-inch) shall conform to the applicable requirements of ANSI/AWWA C900 and subject to additional requirements specified herein.

C. PVC pressure pipe (14-inch through 48-inch) shall conform to the applicable requirements of ANSI/AWWA C905 and subject to additional requirements specified herein.

2.02 PIPE

A. The pipe shall be of the diameter and pressure class specified or shown, shall be furnished complete with rubber gaskets, and all specials and fittings shall be provided as required in the Contract Documents. The dimensions and pressure classes for Dimension Ratios for large PVC pressure pipe with Cast-Iron Pipe Equivalent O.D.'s shall conform to the requirements of AWWA.

B. Unless otherwise provided in alternate qualification procedures of PPI-TR3, compounds which have a Hydrostatic Design Basis (HDB) of 4000 psi at 73.4 degrees F for water shall not contain additives and fillers that exceed the recommended values in Table 1, Part Y of PPI-TR3 (e.g., allowable content range for calcium carbonate is 0.0-5.0 parts per hundred of resin). If requested by the ENGINEER, the additive and filter content shall be determined using the prolysis method as specified in ASTM D 2584.

C. Joints: All joints for the buried PVC pipe shall be either an integral bell manufactured on the pipe or a separate coupling both employing a rubber ring joint. The bell and coupling shall be the same thickness as of the pipe barrel, or greater thickness. The sealing ring groove in the coupling shall be of the same design as the groove in cast iron fittings and valves available from local water works supply distributors. Where required, restrained joint retainer glands shall be used and

shall be cast from 60-42-10 ductile iron and shall have a sufficient number of ductile tie bolts to restrain working and test pressures as required. The retainer clamp shall be of two piece construction with serrations on the I.D. sufficient to hold the required pressures with a safety factor of 2:1. The retainers shall be Series 1500 or 6500 as manufactured by EBAA, Iron, Inc.

D. Joint Deflection: Deflection at the joint shall not exceed 1.5 degrees or one half the maximum deflection recommended by the manufacturer. No deflection of the joint shall be allowed for joints which are overbelled or not belled to the stop mark.

2.03 FITTINGS

A. Fittings in the pipe shall be ductile iron and shall conform to the requirements of AWWA C110, Class 250. PVC pipe fittings shall be restrained joint.

B. All fittings shall be lined and coated in accordance with the requirements of Section 02502 Ductile Iron Pipe and Fittings and Section 02501 Piping, General.

C. Each fitting shall be clearly labeled to identify its size and pressure class.

D. Mechanical joint restraint shall be incorporated in the design of the follower gland. The restraint mechanism shall consist of a plurality of individually activated gripping surfaces to maximize restraint capability. Glands shall be manufactured of ductile iron conforming to ASTM A536-80. The gland shall be such that it can replace the standardized mechanical joint gland and can be used with the standardized mechanical joint bell conforming to ANSI/AWWA A21.11/C111 and ANSI/AWWA A21.53/C153 of latest revision. Twist-off nuts, sized same as tee-head bolts, shall be used to insure proper actuating of restraining devices. The restraining glands shall have a pressure rating equal to that of the PVC pipe on which it is used and shall be Megalug Series 2000 PV or 2000SV as manufactured by EBAA, Iron Inc., or equal.

PART 3 – EXECUTION

3.01 GENERAL

A. All laying, jointing, testing for defects and for leakage shall be performed in the presence of the ENGINEER, and shall be subject to acceptance by the ENGINEER. All material found during the progress to have defects will be rejected and the CONTRACTOR shall promptly remove such defective materials from the site of the work.

B. Installation shall conform to the requirements of AWWA M23, instructions furnished by the pipe manufacturer, and to the supplementary requirements or modifications specified herein. Wherever the provisions of this Section and the aforementioned requirements are in conflict, the more stringent provision shall apply.

3.02 HANDLING AND STORAGE

A. Handling

1. Pipe, fittings and accessories shall be carefully inspected before and after installation and those found defective shall be rejected. Pipe and fittings shall be free from fins and burrs. Before being placed in position, pipe, fittings, and accessories shall be cleaned, and shall be maintained in a clean

condition. Proper facilities shall be provided for lowering sections of pipe into trenches. Under no circumstances shall pipe, fittings or any other material be dropped or dumped into trenches.

B. Storage

1. Pipe should be stored, if possible at the job site in unit packages provided by the manufacturer. Caution should be exercised to avoid compression damage or deformation to bell ends of pipe. Pipe should be stored in such a way as to prevent sagging or bending and protected from exposure to direct sunlight by covering with an opaque material while permitting adequate air circulation above and around the pipe. Gaskets should be stored in a cool, dark place out of the direct rays of the sun, in the original packaging.

3.03 TRENCHING AND BACKFILL

A. Trench excavation and backfill shall conform to the requirements of Section 02221 Trenching, Bedding, and Backfill for Pipe and as specified herein.

3.04 INSTALLATION

A. Bell and spigot pipe shall be laid with the bell end pointing in the direction of laying. Pipe shall be graded in straight lines, taking care to avoid the formation of any dips or low points. Pipe shall not be laid when the conditions of trench or weather are unsuitable. At the end of each day's work, open ends of pipe shall be closed temporarily with wood blocks or bulkheads.

B. Pipe shall be supported at its proper elevation and grade, care being taken to secure firm and uniform support. Wood support blocking will not be permitted. The full length of each section of pipe and fittings shall rest solidly on the pipe bed, with recessed excavation to accommodate bells, joints and couplings. Anchors and supports shall be provided where necessary and where indicated on the DRAWINGS for fastening work into place. Fittings shall be independently supported.

C. Short lengths of pipe shall be used in and out of each rigid joint or rigid structure. Piping that does not allow sufficient space for proper installation of jointing material shall be replaced by one of proper dimensions. Blocking or wedging between bells and spigots will not be permitted.

D. Joints shall be installed according to manufacturer's recommendations. Trenches shall be kept free of water until joints have been properly made. The maximum combined deflection at any coupling shall be in accordance with the manufacturer's recommendations.

E. Pipe shall be cut by means of saws, power driven abrasive wheels or pipe cutters, which will produce a square cut. No wedge-type roller cutters will be permitted. After cutting, the end of the pipe shall be beveled using a beveling took, portable type sander or abrasive disc.

3.05 FIELD TESTING AND DISINFECTION

A. Field testing and disinfection of water mains shall conform to the requirements of Section 02503 Pipeline Testing.

3.06 TRACER WIRE

A. All non-ferrous pipe (PVC AND HDPE) shall be furnished and installed with tracer wire. Special care in handling shall be exercised during delivery, distribution, and storage of tracer wire to avoid damage and unnecessary stresses. Damaged tracer wire will be rejected and shall be replaced at the CONTRACTOR's expense. The tracer wire shall have water-blocking characteristics, be corrosive resistant, and have UV protection. The tracer wire shall be copper or copper clad steel with polyethylene insulation and core material of woven polyester and water blocking polyester yarns. The wire shall have an outer jacket of high-density polyethylene. The wire shall be HDD-CCS PE45 as manufactured by Pro Trace; or Soloshot EHS by Copperhead Industries. Manufacturer/distributor furnished water-blocking connectors and locate clip shall be used as needed. Refer to DRAWINGS standard details for additional information.

END OF SECTION

SECTION 02513 ASPHALTIC CONCRETE PAVING

PART 1 - GENERAL

1.01 DESCRIPTION

A. Furnish all labor, materials, equipment and incidentals required and place asphaltic concrete pavement in accordance with the grades and typical sections shown on the DRAWINGS and as specified herein.

1.02 RELATED SECTIONS

A. Section 02100: Site Preparation

B. Other Sections as applicable.

1.03 REFERENCES

A. The WORK under this Contract shall be in strict accordance with the following codes and standards.

1. The applicable municipality
2. Broward County Traffic Engineering Division
3. Florida Department of Transportation Specifications (FDOT)
4. OSHA Safety and Health Standards for Construction.

1.04 SUBMITTALS

A. Submit mix design for concurrence.

PART 2 - PRODUCTS

2.01 MATERIALS

A. The limerock base shall consist of limerock as specified by the FDOT Standard Specification 200.

B. The material used for the prime coat shall conform to FDOT Standard Specification 300.

C. Bituminous material for tack coat shall be trackless and meet the FDOT Standard Specifications 300.

D. The materials of the asphaltic concrete surface shall conform with applicable sections of FDOT Standard Specifications for Asphaltic Concrete with the following exception:

1. Recycled asphalt may not be used for the final course.

PART 3 - EXECUTION

3.01 INSTALLATION

A. All soft and yielding material and other portions of the subgrade which will not compact readily shall be removed and replaced with suitable material and the whole subgrade brought to line and grade and to a foundation of uniform compaction and supporting power. The cost of removing and replacing unsuitable material shall be included in the bid for the paving.

B. Where specified, stabilizing shall conform to FDOT Standard Specification 160.

C. The subgrade, in both cut and fill sections, shall be compacted to a density of not less than 98 percent of the maximum dry density as determined by the AASHTO Method T-180. If shown on the DRAWINGS, compact subgrade to a Florida Bearing Value of 75 psi. Unless the subgrade material at the time of compacting contains sufficient moisture to permit proper compaction it shall be moistened as necessary and then compacted. Subgrade material containing excess moisture shall be permitted to dry to the proper consistency before being compacted. The subgrade shall be shaped prior to making the density tests. The required density shall be maintained until the base or pavement has been laid or until the aggregate materials for the base or pavement course have been spread in place.

D. The minimum compacted thickness of the limerock base shall be as depicted in the detail DRAWINGS applied in four-inch maximum layers of equal depth unless otherwise depicted in the DRAWINGS. The width of the limerock base shall be wider than the pavement as depicted in the detail DRAWINGS.

E. Before the prime coat is applied, all loose material, dust, dirt or other foreign material which might prevent bond with existing surface shall be moved to the shoulders to the full width of the base by means of revolving brooms, mechanical sweepers, blowers, supplemented by hand sweeping or other approved methods. The glazed finish shall have been removed from the base. The prime coat shall be applied by a pressure distributor so that approximately 0.1 gallons per square yard is applied uniformly and thoroughly to a clean surface.

F. Prior to the application of the surface course, all loose material, dust, dirt and all foreign material which might prevent proper bond with the existing surface shall be removed to the full width of the repair by means of approved mechanical sweepers and supplemented by hand sweeping if required.

G. Apply bituminous tack coat at a rate between 0.02 and 0.10 gallons per square yard. Bituminous material shall be heated as per manufacturers' recommendations.

H. All manhole castings, valve boxes or other utility castings within the area to be surfaced shall be adjusted to the proposed surface elevation by the CONTRACTOR. The WORK shall be accomplished in such a manner as to leave the casting fixed permanently in its correct position.

3.02 PAVEMENT REPAIR

A. All damage to pavement as a result of the WORK (construction or maintenance) under this contract shall be repaired according to the plans and specifications at the CONTRACTOR's cost. Pavement shall be repaired to match the original surface material and original grade; however, the asphalt concrete thickness shall not be less than 1 inch. The repair shall include the preparation of the subgrade, the placing and compacting of the limerock base, the preparation and priming of the base, the placing and maintaining of the surface treatment, all as specified herein and as shown on the DRAWINGS.

B. The width of all repairs shall extend at least 12 inches beyond the limit of the damage or as shown on the DRAWINGS. The edge of the pavement to be left in place shall be saw cut to a true edge and should provide a clean edge to abut the repair. The line of the repair shall be reasonably uniform with no unnecessary irregularities.

3.03 TESTING

A. The CONTRACTOR shall have and pay for density, soil bearing, materials, and such other tests performed as it may deem necessary. The CONTRACTOR shall fully cooperate with the testing agency. Should any test indicate that any portion of the materials or workmanship

does not comply with these Specifications; a retest shall be performed at the CONTRACTOR's expense. If the retest confirms the first test, that portion of the WORK shall be removed and replaced or reworked at no additional cost to the CITY until satisfactory compliance is attained.

END OF SECTION

SECTION 02580 PAVEMENT MARKINGS AND SIGNING

PART 1 - GENERAL

1.01 DESCRIPTION

A. The CONTRACTOR shall supply all labor, equipment, materials, and incidentals necessary to install pavement markings and signing in accordance with the plans and the following specifications.

1.02 RELATED SECTIONS

A. Section 01340 – Shop Drawings, Work Drawings and Samples.

B. Other Sections as applicable.

1.03 REFERENCED SPECIFICATIONS, CODES AND STANDARDS

A. The American Association of State Highway and Transportation Officials (AASHTO)

B. Federal Highway Administration - Manual of Uniform Control Devices (MUTCD)

C. FDOT Design Standards.

D. FDOT Standard Specifications for Road and Bridge Construction.

E. Broward County Traffic Engineering Division (BCTED) Minimum Standards and the BCTED Pavement Markings & Signs Detail Sheet.

F. Other standards references in the Plans.

PART 2 - PRODUCTS

2.01 MATERIALS

A. All pavement markings shall be thermoplastic unless otherwise noted. Thermoplastic pavement markings shall be fully reflectorized and meet the requirements of AASHTO M249 and the FDOT Standard Specifications for Road and Bridge Construction.

B. Traffic paint shall be fully reflectorized and meet the requirements of the FDOT Standard Specifications for Road and Bridge Construction and shall be Sherwin- Williams "Pro-Mar" Traffic Marking Paint, series B29 or Glidden Traffic paint #63228. Provide two (2) coats of paint, 5 mil minimum wet film thickness each.

C. Pavement markings on brick or concrete pavers shall be 3M 5730/31 tape applied with contact cement per manufacturers specifications.

D. All signs in Broward County right of way shall have type XI prismatic sheeting.

PART 3 - EXECUTION

A. All pavement marking and signing shall be applied in accordance with Broward County Traffic Engineering Division (BCTED) Minimum Standards and the BCTED Pavement Markings & Signs Detail Sheet as applicable to the Municipality in which the WORK resides.

B. All pavement markings shall be temporarily applied as paint upon completion of construction of asphalt paving. All such temporary paint shall be replaced with thermoplastic at least 90 days, but no later than 120 days, after paving.

C. Precast concrete bumpers (wheel stops) are required for all parking stall unless specifically stated in the DRAWINGS. Wheel stops are to be pinned using (2) - 24" #4 bar. Wheel stops are to be painted as directed by the CITY.

D. Parking stalls shall be marked in accordance with the typical pattern indicated on the DRAWINGS. Stall width and depth, and drive widths indicated are minimum and must not be reduced.

E. An FDOT approved sealer must be applied to concrete surfaces prior to application of pavement markings.

F. Paint concrete base and base plate at all parking lot lighting standards.

G. Blue/blue RPM's are to be placed next to fire hydrants. The location shall be the center of the adjacent lane or as directed by the utility owner.

H. The CONTRACTOR shall refurbish pavement marking and signs damaged during construction at no additional cost.

I. All signs and sign supports intended for removal shall be removed completely and disposed of properly.

J. All signs to be relocated shall be properly installed in a temporary location with applicable viability and not interfere with construction prior to proper installation in the proposed location.

END OF SECTION

SECTION 02919 TOPSOIL

PART 1 - GENERAL

1.01 RELATED DOCUMENTS

A. All applicable provisions of the Bidding and Contract Requirements, and Division 1 - General Requirements shall govern the WORK under this Section.

1.02 WORK INCLUDED

A. Provide all labor, materials, necessary equipment and services to complete the WORK, as indicated on the DRAWINGS, as specified herein or both.

B. Including but not necessarily limited to the following:

1. Topsoil Stripping.
2. Topsoil Mixing and Spreading.

C. There shall be no classification of excavation for measurement of payment regardless of materials encountered.

1.03 RELATED WORK

A. Section 02230 - Site Clearing.

B. Section 02300 - Earthwork.

C. Section 02310 - Site Grading.

PART 2 - PRODUCTS

2.01 TOPSOIL

A. Topsoil shall be obtained from any previously established stockpile on site, to the extent that suitable material is available.

B. Additional topsoil, if required, shall be obtained by mixing existing on-site sandy fill with imported muck or compost.

C. Topsoil, whether obtained from stockpile, or mixed as described in "B" above, shall be sandy loam, and shall have the following characteristics:

1. 95% of topsoil shall pass a ¼ inch sieve.
2. Topsoil shall be free of stones 1 inch in longest dimensions, earth clods, plant parts, and debris.
3. Organic matter content shall be 4% to 12% of total dry weight.
4. pH and nutrient content shall be adjusted as necessary to conform with recommendations made by testing laboratory. (See 2.01 (D))

D. Samples shall be submitted to CITY for testing. Test shall indicate compliance with the specifications and recommendations as to the type and quantity of soil additives required to bring the nutrient content and pH to satisfactory levels for planting specified plant material. Tests shall be required at a rate of one per 500 cubic yards of material placed, for the first 5,000 cubic yards of material, and may be reduced at the ENGINEER's discretion thereafter. Sampling shall be done in the presence of the ENGINEER. The CONTRACTOR shall be responsible for the cost of testing.

PART 3 - EXECUTION

3.01 JOB CONDITIONS

A. Protection: Use all means necessary to protect existing objects and vegetation. In the event of damage, immediately make all repairs and replacements necessary to the acceptance of the ENGINEER.

3.02 FILLING AND GRADING:

A. Topsoil shall be spread in a uniform 2 inches layer after compaction, over all sodded and pervious areas, and finished to grades shown on the plans, making allowance, where necessary, for sod. Grades shown include 2 inches for thickness of sod in all sodded areas.

END OF SECTION

SECTION 02922 SODDING

PART 1 - GENERAL

1.01 RELATED DOCUMENTS

A. All applicable provisions of the Bidding and Contract Requirements, and Division 1 - General Requirements shall govern the WORK under this Section.

1.02 WORK INCLUDED

A. The WORK included in this section consists of furnishing all labor, supplies, equipment and materials necessary to complete the installation of sod and associated materials herein after listed and as shown on the plans.

1.03 RELATED WORK

A. Section 02300 - Earthwork.

B. Section 02310 - Site Grading.

C. Section 02900 - Landscape Work.

D. Section 02919 - Top Soil.

1.04 QUALITY ASSURANCE

A. Sodding WORK shall be performed by a firm specializing in sodding.

B. Substitutions: Do not make substitutions. If specified sod is not obtainable, submit proof of non- availability to ENGINEER, together with proposal for use of equivalent material.

C. Analysis and Standards: Package standard products with supplier's certified analysis. For other materials, provide analysis by recognized laboratory made in accordance with methods established by the Association of Official Agriculture Chemists, wherever applicable.

1.05 SUBMITTALS

A. Submit the following in accordance with Conditions of Contract and Division 1 Specification Sections.

B. Plant and Material Certifications:

1. Certificate of inspection as required by governmental authorities.
2. Manufacturer's or vendor's certified analysis for soil amendments or fertilizer materials.

1.06 DELIVERY, STORAGE AND HANDLING

A. Packaged Materials: Deliver packaged materials in containers showing weight, analysis, and name of manufacturer. Protect materials from deterioration during delivery, and while stored at site.

B. Sod: Time delivery so that sod will be placed within 24 hours after stripping. Protect sod against drying.

C. Transporting:

1. Sod transported to the project in open vehicles shall be covered with

tarpaulin or other suitable covers securely fastened to the body of the vehicle to prevent injury to the sod material. Closed vehicles shall be adequately ventilated to prevent overheating of the sod. Evidence of inadequate protection against drying out in transit shall be cause for rejection.

2. Sod shall be kept moist, fresh and protected at all times. Such protection shall encompass the entire period during which the sod is in transit, being handled, or in temporary storage.
3. Upon arrival at the temporary storage location or the site of WORK, sod shall be inspected for proper shipping procedures. Should the roots be dried out and sod is brown, the ENGINEER will reject the sod. When sod has been rejected, the CONTRACTOR shall remove it at once from the area of the WORK and replace it.
4. Unless otherwise authorized by the ENGINEER, the CONTRACTOR shall notify the ENGINEER at least 48 hours in advance of the anticipated delivery date of sod material. A legible copy of the invoice, showing species and variety of sod included for each shipment shall be submitted to the ENGINEER. Certificate of Inspection must accompany each sod shipment.

1.07 JOB CONDITIONS

A. Begin installation of sod after preceding related WORK is accepted.

B. Environmental Requirements:

1. Install sod during months acceptable to the ENGINEER.
2. Do not install sod on saturated soil.

C. Protection: Erect signs and barriers to control vehicular traffic.

D. Utilities: Determine location of underground utilities and perform WORK in a manner which will avoid possible damage. Hand excavate, as required. Maintain grade stakes set by others until removal is mutually agreed upon by parties concerned.

1.08 SEQUENCING AND SCHEDULING

A. Correlate planting with specified maintenance periods to provide maintenance from date of Substantial Completion.

B. Coordination with sodding: Plant trees, palms and shrubs after final grades are established and prior to planting of sod, unless otherwise acceptable to ENGINEER. If planting of trees, palms and shrubs occurs after sod WORK, protect sod areas and promptly repair damage to lawns resulting from planting operations.

1.09 SPECIAL PROJECT WARRANTY

A. Warranty sod through specified lawn maintenance period, and until Final Certification.

PART 2 - PRODUCTS

2.01 PLANTING SOIL

A. Provide new planting soil that is fertile, friable, natural loam, surface soil, reasonably free of subsoil, clay lumps, brush, weeds and other litter, and free of roots, stumps,

stones larger than 1 inch in any dimension, and other extraneous or toxic matter harmful to plant growth.

B. Obtain planting soil from local sources or from areas having similar soil characteristics to that found at project site.

C. Refer to the "FDOT Standard Specifications for Road and Bridge Construction" for planting soil specifications.

2.02 COMMERCIAL FERTILIZER

A. For sod, provide fertilizer with percentage of nitrogen required to provide not less than 1 pound of actual nitrogen per 1,000 sq. ft. of lawn area and not less than 4% phosphoric acid and 2% potassium. Provide nitrogen in a form that will be available to sod during initial period of growth; at least 50% of nitrogen to be organic form.

2.03 SOD

A. Provide strongly rooted sod, not less than 2 years old, free of weeds and undesirable native grasses, and machine cut to pad thickness of 1-1/2 inch (plus or minus 1/4 inch), excluding top growth and thatch. Provide only sod capable of vigorous growth and development when planted (viable, not dormant).

B. Provide sod uniform pad sizes with maximum 5% deviation in either length or width. Broken pads with uneven ends will not be acceptable. Sod pads incapable of supporting their own weight when suspended vertically with a firm grasp on upper 10% of pad will be rejected.

C. Provide sod as indicated on the plans and composed of the following:

1. St. Augustine Floritam;
2. Argentine Bahia Grass.

D. Sod shall be nursery grown on cultivated mineral agricultural soils. Sod shall have been mowed regularly and carefully maintained from planting to harvest.

E. American Sod Producers Association (ASPA) Grade: Nursery Grown or Approved. Field grown sod is not acceptable.

F. Furnished in pads:

1. Size
a. Length: 24 inches (±)5%
b. Width: 18 inches (±)5%
c. Thickness: ½ inches excluding top growth and thatch
2. Not stretched, broken or torn.

G. Uniformly mowed height when harvested: 2 inches.

H. Thatch: Maximum 1/2 inch uncompressed.

I. Inspected and found free of disease, nematodes, pests, and pest larvae, by entomologist of State Department of Agriculture.

J. Weeds:

1. Free of Bermuda grass, nut grass or other objectionable weeds.

K. Uniform in color, leaf texture, and density.

2.04 WATER

A. Water shall be potable, from municipal water supplies or other sources which are approved by a public health department.

2.05 FERTILIZER

A. FS O-F-241c(1), Grade A or B.

B. The chemical designation shall be 1-8-8, with at least 50% of the nitrogen from a non-water-soluble organic source.

2.06 HERBICIDES

A. As recommended by the State Department of Agriculture.

2.07 STAKES

A. Softwood, ¾ inch diameter, 8 inch length.

PART 3 - EXECUTION

3.01 PREPARATION OF GROUND SURFACE

A. Before mixing, clean planting soil of roots, plants, sods, stones, clay lumps, and other extraneous material harmful or toxic to plant growth.

B. Mix specified fertilizers with planting soil as necessary at rates specified. Delay mixing fertilizer if planting will not allow placing of planting soil within a few days.

C. For sod, mix planting soil either prior to planting or apply on surface of topsoil and mix thoroughly before planting.

3.02 PREPARATION OF PLANTING BEDS

A. Loosen subgrade of lawn areas to a minimum depth of 4 inches. Remove stones measuring over 1 1/2 inches in any dimension. Remove sticks, stones, rubbish, and other extraneous matter. Limit preparation to areas which will be planted promptly after preparation.

B. Spread planting soil to minimum depth of 2 inches or as required to meet lines, grades, and elevations shown, after light rolling and natural settlement. Add specified fertilizer and mix thoroughly into upper 4 inches of topsoil.

C. Place approximately 1/2 of total amount of top soil required. Work into top of loosened subgrade to create a transition layer and then place remainder of planting soil. Add specified soil amendments and mix thoroughly into upper 4 inches.

D. Where sod is to be planted in areas that have not been altered or disturbed by excavating, grading, or stripping operations, prepare soil for lawn planting as follows: Till to a depth of not less than 6 inches. Apply fertilizers as specified. Remove high areas and fill in depressions. Till soil to a homogenous mixture of fine texture, free of lumps, clods, stones, roots and other extraneous matter.

E. Prior to preparation of unchanged areas, remove existing grass, vegetation and turf. Dispose of such material outside of CITY's property. Do not turn existing vegetation over into soil being prepared for lawns.

F. Allow for sod thickness in areas to be sodded.

G. Apply specified commercial fertilizer at rates specified and thoroughly mix into upper 2 inches of topsoil. Delay application of fertilizer if lawn planting will not follow within a few days.

H. Fine grade sod areas to smooth, even surface with loose, uniformly fine texture. Roll, rake, and drag lawn areas, remove ridges and fill depressions, as required to meet finish grades. Limit fine grading to areas which can be planted immediately after grading.

I. Moisten prepared sod areas before planting if soil is dry. Water thoroughly and allow surface to dry before planting lawns. Do not create a muddy soil condition.

J. Restore sod areas to specified condition, if eroded or otherwise disturbed, after fine grading and prior to planting.

3.03 SODDING NEW LAWNS

A. Lay sod within 24 hours from time of stripping.

B. Lay sod to form solid mass with tightly fitted joints. Butt ends and sides of sod strips; do not overlap. Stagger strips to offset joints in adjacent courses. Work from boards to avoid damage to subgrade or sod. Tamp or roll lightly to ensure contact with subgrade. Work sifted soil into minor cracks between pieces of sod; remove excess to avoid smothering of adjacent grass.

C. Anchor sod on slopes with wood pegs to prevent slippage.

D. Water sod thoroughly with a fine spray immediately after planting.

3.04 MAINTENANCE

A. Begin maintenance immediately after planting.

B. Maintain lawns for not less than 30 days after Substantial Completion Certification, and longer as required to establish an acceptable lawn.

C. Maintain sod by watering, fertilizing, weeding, mowing, trimming, and other operations such as rolling, regrading and replanting as required to establish a smooth, acceptable lawn, free of eroded or bare areas.

D. Mowing:

1. Whenever grass reaches a height of 3 inches, it shall be cut back to 2 inches with all clippings removed.
2. After two mowings, CONTRACTOR shall topdress the sod with an application of fertilizer at the rate of 1 pound of actual nitrogen per 1,000 square feet.

3.05 CLEANUP AND PROTECTION

A. During sodding WORK, keep pavements clean and WORK area in an orderly condition.

B. Protect sodding WORK and materials from damage due to landscape operations, operations by other contractors and trades, and trespassers. Maintain protection during installation and maintenance periods. Treat, repair, or replace damaged sod WORK as directed.

3.06 INSPECTION AND ACCEPTANCE

A. Sod areas will be accepted when in compliance with all the following conditions:

1. The roots are thoroughly attached to the soil.
2. Absence of visible joints.
3. All areas show a uniform stand of specified grass in healthy condition.
4. At least 30 days have elapsed since the completion of the WORK in this section.

B. When inspected sod WORK does not comply with requirements, replace rejected WORK and continue specified maintenance until reinspected by ENGINEER and found to be acceptable. Remove rejected plants and materials promptly from project site.

C. Procedure:

1. The CONTRACTOR shall submit a request for acceptance in writing to the ENGINEER. Request must be received not less than 10 days before the anticipated date for final inspection.
2. Upon completion of all repairs and/or renewals required by ENGINEER at the inspection, the ENGINEER will verify the completeness of the WORK and then notify the CITY in writing that the WORK is accepted.
3. Upon Final Completion, the CITY will assume maintenance of all sod areas.

END OF SECTION

SECTION 03050 CONCRETE

PART 1 - GENERAL

1.01 RELATED SECTION

A. All applicable provisions of the Bidding and Contract Requirements, and Division 1 – General Requirements shall govern the WORK under this Section.

1.02 WORK INCLUDED

A. Provide all labor, materials, necessary equipment and services to complete the concrete work, as indicated on the DRAWINGS, as specified herein or both.

B. Including but not necessarily limited to the following:

1. Form WORK, shoring, bracing and anchorage.
2. Concrete reinforcement and accessories.
3. Cast-in-place concrete.

1.03 RELATED WORK

A. Section 02513 - Asphaltic Concrete Paving.

B. Section 03300 - Cast-in-Place Concrete

1.04 QUALITY ASSURANCE

A. All WORK shall be in accordance with ACI 301, latest edition, a copy of which shall be maintained on site.

B. Requirements of Regulatory Agencies: perform WORK in accordance with local building and other applicable codes.

C. Installation: Performed only by skilled workers with satisfactory record of performance on completed projects of comparable size and quality.

D. Inspection and Testing:

1. Test Cylinders -As per ASTM C-39.
   a. Minimum of three (3) concrete test cylinders shall be taken for every 75 or less cubic yards of concrete placed each day.
   b. Minimum of one (1) slump test shall be taken during any cold weather concreting, and be cured on job site under same conditions as the concrete it represents.
2. Slump Test -As per ASTM C-143.
   a. Minimum of one (1) slump test shall be taken for each set of test cylinders taken.

1.05 SUBMITTALS

A. Test Reports: Reports of concrete compression, yield, air content and slump tests.

B. Certificates:

1. Manufacturer's certification that materials meet specification requirements.
2. Material content per cubic yards of each class of concrete furnished.
   a. Dry weights of cement.
   b. Saturated surface-dried weights of fine and course aggregate.
   c. Quantities, type and name of all mixtures.

d. Weight of water.

3. Ready-mix delivery tickets as per ASTM C-94.

C. Shop Drawings:

1. Show sizes and dimensions for fabrication and placing of reinforcing steel and bar supports.
2. Indicate reinforcement sizes, spaces, locations and quantities or reinforcing steel, and wire fabric, bending and cutting schedules, splicing and supporting and spacing devices.
3. Indicate formwork dimensioning, materials, arrangement of joints and ties.
4. Shop Drawings shall be prepared under seal of a Professional Structural engineer registered in the State of Florida.

1.06 DELIVERY, STORAGE AND HANDLING

A. Deliver reinforcement to project site in bundles marked with metal tags indicating bar size and length.

B. Handle and store materials to prevent contamination.

1.07 JOB CONDITIONS

A. Allowable concrete temperatures:

1. Hot weather: Maximum 90° F as per ASTM C-94.

B. Do not place concrete during rain, unless protection is provided.

PART 2 - PRODUCTS

2.01 FORM MATERIALS

A. Materials shall conform to ACI 301, latest edition.

B. Plywood forms: Douglas Fir Species, solid one side, form grade, sound undamaged sheets.

C. Lumber: Southern Pine Species, No. 2 Grade, with grade stamp clearly visible.

D. Form Ties: Removable, snap-off metal, of fixed and adjustable length, cone ends.

E. Tubular Column Type: Round, spirally wound laminated fiber material, clearly visible.

2.02 REINFORCING STEEL

A. Reinforcing steel shall conform to ASTM A615, 60 ksi yield grade billet steel reformed bars; uncoated finish.

B. Welded steel wire fabric shall conform to ANSI/ASTM A185, plain type; coiled rolls, uncoated finish.

2.03 CONCRETE MATERIALS

A. Cement: shall conform to ASTM C150, normal Type II Portland, gray color.

B. Fine and coarse aggregate shall conform to ASTM C33.

C. Water: clean and not detrimental to concrete.

2.04 ADMIXTURES

A. Air Entraining: ASTM C-260.

B. Chemical: Type (as required) ASTM C-494.

C. Fly Ash and Pozzolans: ASTM C-618.

2.05 ACCESSORIES

A. Non-shrink grout: pre-mixed compound with non-metallic aggregate, cement, water reducing and plasticing agents; capable of minimum compressive strength of 3500 psi.

B. Construction joints: locate and install construction joints, which are not shown on DRAWINGS, so as not to impair strength and appearance of the structure, as acceptable to the ENGINEER. Place construction joints perpendicular to the main reinforcement, continue reinforcement across construction joints.

C. Expansion joints: shall be a minimum of 3/4 inch thick asphalt impregnated fiberboard as per ASTM D-1751.

D. Form release agent shall be a colorless material which will not stain concrete, absorb moisture or impair natural bonding or color characteristics of coating intended for use on concrete.

E. Water shall be clean and potable.

2.06 CURING MATERIALS

A. Water shall be clean and potable.

B. Absorptive mat shall be burlap fabric of 9 ounces/square yard clean, roll goods complying with AASHTO M182, Class 3.

C. Membrane curing compound shall conform to ASTM C309.

D. Clear Sealer: "Clear Bond" as manufactured by Guardian Chemical Co. or approved equal.

2.07 CONCRETE MIX

A. Mix concrete in accordance with ASTM C94.

B. Concrete:

1. Compressive strength (28 days): 3000 psi.
2. Slump: 4(±) 1 inch.

PART 3 - EXECUTION

3.01 FORMWORK ERECTION

A. Verify lines, levels, and measurement before proceeding with formwork.

B. Hand trim sides and bottom of earth forms; remove loose dirt.

C. Align form joints.

D. Do not apply form release agent where concrete surfaces receive special finishes or applied coatings which may be affected by agent.

E. Coordinate WORK of other sections in forming and setting openings, slots, recesses, chases, sleeves, bolts, anchors and other inserts.

3.02 REINFORCING

A. Place, support and secure reinforcement against displacement.

3.03 PLACING CONCRETE

A. Notify ENGINEER minimum 24-hours prior to commencement of concreting operations.

B. Scratch, float, trowel, broom or belt finish surfaces, as scheduled or indicated on the DRAWINGS.

3.04 TOLERANCES

A. Provide Class B tolerance to floor slabs according to ACI 301. Pitch to drains 1/4 inch per foot.

3.05 FINISHES FOR EXPOSED SURFACES

A. Provide exposed surfaces with finishes as called for on the DRAWINGS.

END OF SECTION

SECTION 03100 CONRETE FORMWORK

PART 1 - GENERAL

1.01 RELATEDDOCUMENTS

A. All applicable provisions of the Bidding and Contract Requirements, and Division 1 – General Requirements shall govern the WORK under this Section.

1.02 WORK INCLUDED

A. Formwork for Cast-In-Place Concrete, with shoring, bracing, and anchorage.

B. Openings for other affected WORK.

C. Form accessories.

D. Stripping forms.

1.03 RELATED WORK

A. Section 03050 - Concrete.

B. Section 03200 - Concrete Reinforcement.

C. Section 03300 - Cast-In-Place Concrete.

1.04 SYSTEM DESCRIPTION

A. Design, engineer and construct formwork, shoring and bracing to meet design code requirements, so that resultant concrete conforms to required shapes, lines, and dimensions.

1.05 QUALITY ASSURANCE

A. Construct and erect concrete formwork in accordance with ACI 301 and 347.

1.06 SUBMITTALS

A. Indicate pertinent dimensions, materials, and arrangement of joints and ties.

B. Prepare shop drawings under seal of Professional Structural Engineer registered in the State of Florida.

C. Manufacturer’s certification that materials meet specification requirements.

1.07 DELIVERY, STORAGE AND HANDLING

A. Deliver, store and handle materials in accordance with manufacturer's recommendations.

B. Deliver form materials in manufacturer's packaging with installation instructions.

C. Store off ground in ventilated and protected area to prevent deterioration from moisture or damage.

D. Remove packaging from void forms.

PART 2 - PRODUCTS

2.01 FORM MATERIALS

A. Plywood: Douglas Fir Species; medium density overlaid one side grade; sound, undamaged sheets with straight edges.

B. Lumber: Southern Pine Species; No. 2 grade; with grade stamp clearly visible.

C. Tubular Column: Round, of spirally wound laminated fiber type; surface treated with release agent; of size required.

2.02 FORMWORK ACCESSORIES

A. Form Ties: Snap-off metal of adjustable length; cone type; 1 1/2 inch break back dimension; free of defects that will leave holes no larger than 1-1/4 inches diameter in concrete surface.

B. Form Release Agent: Colorless material which will not stain concrete, absorb moisture, or impair natural bonding in color characteristics of coating intended for use on concrete.

C. Fillets for Chamfered Corners: Wood strips or rigid PVC plastic in maximum possible lengths.

D. Nails, Spikes, Lag Bolts, Through Bolts, Anchorages: Sized as required; or strength and character to maintain formwork in place while placing concrete.

PART 3 - EXECUTION

3.01 INSPECTION

A. Verify lines, levels, and measurements before proceeding with formwork.

3.02 PREPARATION

A. Hand-trim sides and bottoms of earth forms; remove loose dirt prior to placing concrete.

B. Minimize form joints. Symmetrically align joints and make weathertight to prevent leakage of mortar.

C. Arrange and assemble formwork to permit dismantling, stripping, so that concrete is not damaged during its removal.

D. Arrange forms to allow stripping without removal of principal shores, where required to remain in place.

3.03 ERECTION

A. Provide bracing to ensure stability of formwork. Strengthen formwork liable to be overstressed by construction loads.

B. Camber slabs and beams to achieve ACI 301 tolerances.

C. Provide temporary ports in formwork to facilitate cleaning and inspection. Locate openings at bottom of forms to allow flushing water to drain. Close ports with tight fitting panels, flush with inside face of forms, neatly lifted so that joints will be apparent in exposed concrete surfaces.

D. Provide expansion strips on external corners of beams and columns, where exposed.

E. Install void forms. Protect from moisture before concrete placement. Protect from crushing during concrete placement.

F. Construct formwork to maintain tolerances in accordance with ACI 301.

3.04 APPLICATION OF FORM RELEASE AGENT

A. Apply form release agent on formwork in accordance with manufacturer's instructions. Apply prior to placing reinforcing steel, anchoring devices, and embedded items.

B. Do not apply form release agent where concrete surfaces are scheduled to receive special finishes or applied coverings which may be affected by agent. Soak contact surfaces of untreated forms with clean water. Keep surfaces wet prior to placing concrete.

3.05 INSERTS, EMBEDDED PARTS, AND OPENINGS

A. Provide formed openings where required for WORK embedded in or passing through concrete.

B. Coordinate WORK of other sections in forming and setting openings, slots, recesses, chases, sleeves, bolts, anchors, and other inserts.

C. Install accessories in accordance with manufacturer's instructions, level and plumb. Ensure items are not disturbed during concrete placement.

3.06 FORM REMOVAL

A. Notify ENGINEER prior to removing formwork.

B. Do not remove forms and shoring until concrete has sufficient strength to support its own weight, and construction and design loads which may be imposed upon it. Remove load supporting forms when concrete has attained 75% of required 28-day compressive strength, provided construction is reshored.

C. Formwork not supporting weight of concrete, such as sides of beams, walls, columns, and similar parts of the WORK, may be removed after cumulatively curing at not less than 50° F for 24-hoursafter placing concrete, provided concrete is sufficiently hard to not be damaged by form removal operations, and provided curing and protection operations are maintained.

D. Formwork supporting weight of concrete, such as beam soffits, joints, slabs and other structural elements, may not be removed in less than 14 days and until concrete has attained design minimum compressive strength at 28-days. Determine potential compressive strength of inplace concrete by testing field-cured specimens representative of concrete location of members.

E. Reshore structural members due to design requirements or construction conditions to permit successive construction.

F. Remove formwork progressively so no unbalanced loads are imposed on structure.

G. Do not damage concrete surfaces during form removal.

H. Store reusable forms for exposed architectural concrete to prevent damage to contact surfaces.

I. Remove formwork in same sequence as concrete placement to achieve similar concrete surface coloration.

3.07 CLEANING

A. Clean forms to remove foreign matter as erection proceeds.

B. Ensure that water and debris drain to exterior through clean-out ports.

END OF SECTION

SECTION 03200 CONCRETE REINFORCEMENT

PART 1 – GENERAL

1.01 RELATEDDOCUMENTS

A. All applicable provisions of the Bidding and Contract Requirements, and Division 1 – General Requirements shall govern the WORK under this Section.

1.02 WORK INCLUDED

A. Reinforcing steel bars, welded steel wire fabric, fabricated steel bar or rod mats for cast-in-place concrete.

B. Support chairs, bolsters, bar supports, spaces, for supporting reinforcement.

1.03 RELATED WORK

A. Section 03050 - Concrete.

B. Section 03100 - Concrete Formwork.

C. Section 03300 - Cast-In-Place Concrete.

1.04 QUALITY ASSURANCE

A. Perform concrete reinforcement WORK in accordance with CRSI Manual and Standard Practice, and Documents 63 and 65.

B. Conform to ACI 301.

1.05 SUBMITTALS

A. Indicate sizes, spacings, locations and quantities of reinforcing steel, bending and cutting schedules, splicing, stirrup spacing, supporting and spacing devices.

B. Prepare shop drawings under seal of Professional Structural Engineer registered in the State of Florida.

C. Submit mill test certificates and supplied concrete reinforcing, indicating physical and chemical analysis.

PART 2 - PRODUCTS

2.01 MATERIALS

A. Reinforcing Steel: ASTM A615, 60 ksi yield grade billet-steel, deformed bars, uncoated finish.

B. Welded Steel Wire Fabric: ANSI/ASTM A185 plain type; in coiled rolls; uncoated finish.

C. Stirrup Steel: ANSI/ASTM A82.

2.02 ACCESSORY MATERIALS

A. Tie Wire: Minimum 16 gauge annealed type.

B. Chairs, Bolsters, Bar Supports, Spacers: Sized and shaped for strength and support of reinforcement during installation and placement of concrete, including load bearing pad on bottom to prevent vapor barrier puncture.

C. Chairs, Bolsters, Bar Supports, Spacers Adjacent to Architectural Concrete Surfaces: Plastic coated or stainless steel type; sized and shaped as required.

2.03 FABRICATION

A. Fabricate in accordance with ACI 315, providing concrete cover specified in Section 03300.

B. Locate reinforcing splices not indicated on DRAWINGS at points of minimum stress. Indicate location of splices on shop drawings.

PART 3 - EXECUTION

3.01 INSTALLATION

A. Before placing concrete, clean reinforcement of foreign particles or coatings.

B. Place, support, and secure reinforcement against displacement. Do not deviate from alignment or measurement.

C. Do not dispose or damage vapor barrier required by Section 03300.

END OF SECTION

SECTION 3290 JOINTS IN CONCRETE

PART 1 - GENERAL

1.01 THE REQUIREMENT

A. The CONTRACTOR shall construct all joints in concrete at the locations shown on the DRAWINGS. Joints required in concrete structures are of various types and will be permitted only where shown on the DRAWINGS, unless specifically accepted by the CONSULTANT.

B. Construction joints, expansion joints, contraction joints and control joints shall be provided at the locations shown and formed in accordance with the details shown on the DRAWINGS.

C. Waterstops shall be provided where shown on the DRAWINGS, and in all water bearing joints in hydraulic structures.

D. Provide expansion joint material, joint sealants, expansion joint seals, and contraction joint inserts in accordance with the details shown on the DRAWINGS.

1.02 RELATED WORK SPECIFIED ELSEWHERE

A. Section 03100 - Concrete Formwork

B. Section 03200 - Concrete Reinforcement

C. Section 03300 - Cast-in-Place Concrete.

D. Section 03315 - Grout

E. Section 03350 - Concrete Finishes

F. Section 03370 - Concrete Curing

1.03 REFERENCE SPECIFICATIONS, CODES AND STANDARDS

A. Without limiting the generality of other requirements of these Specifications, all WORK specified herein shall conform to or exceed the applicable requirements of the following documents to the extent that the provisions therein are not in conflict with the requirements of this Section.

1. ACI 301 - Specifications for Structural Concrete for Buildings
2. ACI 318 - Building Code
3. ACI 350 – Code Requirements for Environmental Engineering Concrete Structures
4. Federal Specifications:
   a. TT-S-00227E (3) - Sealing Compound, Elastomeric Type, Multi-component (For Caulking, Sealing, and Glazing Buildings and Other Structures).
5. U.S. Army Corps of Engineers Standard Specifications
   a. CRD-C572
6. 6. Commercial Standards:
   a. ASTM C 920 - Specification for Elastomeric Joint Sealants.
   b. ASTM D 624 - Test Method for Rubber Property -- Tear Resistance.
   c. ASTM D 638 - Test Method for Tensile Properties of Plastics.
   d. ASTM D 746 - Test Method for Brittleness Temperature of Plastics and Elastomers by Impact.
   e. ASTM D 747 - Test Method for Apparent Bending Modules of Plastics by Means of a Cantilever Beam.

f. ASTM D 1752 - Specification for Preformed Sponge Rubber and Cork Expansion Joint Fillers for Concrete Paving and Structural Construction.

g. ASTM D 2240 - Test Method for Rubber Property -- Durometer Hardness.

1.04 TYPES OF JOINTS

A. Construction Joints: Joints between adjacent concrete placements after the initial placement has hardened. Reinforcing is continuous through the joint.

B. Contraction Joints: Contraction joints are similar to construction joints except that the fresh concrete shall not bond to the hardened surface of the first pour, which shall be coated with a bond breaker.

C. Expansion Joints: To allow the concrete to expand freely, a space is provided between the two pours, the joint shall be formed as detailed on the DRAWINGS.

D. Control Joints: Joints formed in concrete to provide a weakened plane in the concrete section to control formation of shrinkage cracks.

1.05 SUBMITTALS

A. Waterstops: Prior to production of the material required under this contract, qualification samples shall be submitted. Samples shall consist of the material to be furnished under this contract. The balance of the material to be used under this contract shall not be produced until after the CONSULTANT has reviewed the qualification samples. The samples shall be delivered to a location on site indicated by the CONSULTANT.

B. Joint Sealant: Prior to ordering the sealant material, the CONTRACTOR shall submit to the CONSULTANT for the CONSULTANT's review, sufficient data to show general compliance with the requirements of the Contract Documents.

C. CONTRACTOR shall submit product data sheets of all materials proposed under this section.

D. Shipping Certification: The CONTRACTOR shall provide written certification from the manufacturer as an integral part of the shipping form, to show that all of the material shipped to this project meets or exceeds the physical property requirements of the Contract Documents. CONTRACTOR certificates are not acceptable.

E. The CONTRACTOR shall submit placement Shop DRAWINGS showing the location and type of all joints for each structure.

F. CONTRACTOR shall submit details of proposed joints in each structure.

1.06 QUALITY ASSURANCE

A. Waterstop

1. Review: It is required that all waterstop field joints shall be subject to review inspection, and no such WORK shall be scheduled or started without having made prior arrangements with the CONSULTANT to provide for the required reviews. Not less than 24 hours' notice shall be provided to the CONSULTANT for scheduling such reviews.

2. All field joints in waterstops will be subject to rigid review for misalignment, bubbles, inadequate bond, porosity, cracks, offsets, and other defects which would reduce the potential resistance of the material to water pressure at any point. All defective joints shall be replaced with material which will pass said review, and all faulty material shall be removed from the site and disposed of by the CONTRACTOR at its own expense.

3. The following defects represent a partial list of defects which shall be grounds for rejection:
   a. Offsets at joints greater than 1/16 inch or 15 percent material thickness, at any point, whichever is less.
   b. Exterior crack at joint, due to incomplete bond, deeper than 1/16 inch or 15 percent of material thickness, at any point, whichever is less.
   c. Any combination of offset or exterior crack which will result in a net reduction in the cross section of the waterstop in excess of 1/16 inch or 15 percent of material thickness at any point, whichever is less.
   d. Misalignment of joint which result in misalignment of the waterstop in excess of 1/2 inch in 10 feet.
   e. Porosity in the welded joint as evidenced by visual inspection.
   f. Bubbles or inadequate bonding which can be detected with pen-knife test. (If, while prodding the entire joint with the point of a pen knife, the knife breaks through the outer portion of the weld into a bubble, the joint shall be considered defective.)

1.07 GUARANTEE

A. The CONTRACTOR shall provide a two-year written guarantee of the entire sealant installation against faulty and/or incompatible materials and quality, together with a statement that it agrees to repair or replace, to the satisfaction of the COUNTY, at no additional cost to the COUNTY, any such defective areas which become evident within said two-year guarantee period.

PART 2 - PRODUCTS

2.01 PVC WATERSTOPS

A. General: Waterstops shall be extruded from an elastomeric polyvinylchloride compound containing the plasticizers, resins, stabilizers, and other materials necessary to meet the requirements of these Specifications. No reclaimed or scrap material shall be used. The CONTRACTOR shall obtain from the waterstop manufacturer and shall furnish to the CONSULTANT for review, current test reports and a written certification of the manufacturer that the material to be shipped to the job meets the physical requirements as outlined in the U.S. Army Corps of Engineers Specification CRD-C572 and listed in Paragraph C. below.

B. Multi-Rib Waterstops: All PVC waterstops shall be of Multi-rib construction. Waterstops for construction joints shall be style 679 by Greenstreak or equal. Waterstops for expansion joints shall be Style 738 by Greenstreak or equal. T type waterstops installed against existing concrete shall be Style 609 for construction joints or Style 667 for expansion joints by Greenstreak, or equal. Compatible batten bars and anchor bolts shall be supplied by the same manufacturer. Prefabricated joint fittings (90º bends and tees) shall be used at all intersections of the ribbed-type waterstops.

C. Waterstop Testing Requirements: When tested in accordance with the specified test standards, the waterstop material shall meet or exceed the following requirement

	Value	ASTM Std.
Tensile Strength-min (psi)	1,750	D-638, Type IV
Ultimate Elongation-min (percent)	350	D-638, Type IV
Low Temp. Brittleness-Max (degrees F)	-35	D-746
Stiffness in Flexure-min (psi)	400	D-747
Accelerated Extraction (CRD-C572)		
Tensile Strength-min (psi)	1,500	D-638, Type IV
Ultimate Elongation-min (percent)	300	D-638, Type IV
Effect of Alkalies (CRD-C572)		
Change in Weight (percent)	+0.25 / -0.10	----
Change in Durometer, Shore A	+5	D-2240
Finish Waterstop		
Tensile Strength-min (psi)	1,400	D-638, Type IV
Ultimate Elongation-min (percent)	280	D-638, Type IV

2.02 CHEMICAL RESISTANT WATERSTOPS

A. General: Where specifically noted on Contract DRAWINGS, chemical resistant waterstops shall be used instead of PVC waterstops. Waterstops shall be manufactured from thermoplastic elastomeric rubber material. The synthetic rubber shall be provided a high resistance to acids, bases, alcohols, oils, solvents or chemicals. No reclaimed material shall be used. The CONTRACTOR shall obtain from the waterstop manufacturer and furnish to the CONSULTANT for review, current test reports and a written certification of the manufacturer that the material to be shipped to the job meets the physical requirements outlined herein. Waterstop connections shall be heat welded. All waterstop corners, intersections, and directional changes shall be miter cut, heat welded, factory fabricated. Only straight butt splices shall be allowed in the field.

B. Multi-Rib Waterstops: All chemical resistant waterstops shall be of multi-rib construction. Waterstops for expansion joints shall be 9”x3/16” ribbed with a center bulb. Waterstops for construction joints shall be 6”x3/16” ribbed with a center bulb. Chemical resistant waterstops shall be Westec Type TPE-R synthetic rubber, manufactured by Westec Barrier Technologies, St. Louis, MO, or equal.

C. Waterstop Physical Properties: When tested in accordance with the specified test standards, the waterstop material shall meet or exceed the following requirements:

Physical Property	Value	ASTM Std.
Tensile Strength	1,800 PSI	D-412
Ultimate Elongation	450%	D-412
100% Modulus	1,000 PSI	D-412
Shore A Hardness	85 units ±5 units	D-2240
Brittle Point	-70° F	D-746
Ozone Resistance	450 pphm passed	D-117D

D. Weathering Performance: When tested in accordance with the specified test standards, the waterstop material shall meet or exceed the following requirements:

Physical Property	Value	ASTM Std.
Tensile Strength (% Retention)	87 %	D-412
Ultimate Elongation (% Retention)	84 %	D-412
Shore A Hardness (units change)	7 units	D-2240

E. Chemical Resistance Properties: When tested in accordance with ASTM D-471 after 166 hours of full immersion at 73.4oF (23oC), the waterstop material shall meet or exceed the following requirements:

Physical Property	Value	ASTM Std.
Sulfuric Acid 98 %	Ultimate Elongation	77% Retention
	Ultimate Tensile	82% Retention
	100% Modulus	108% Retention
	Hardness Change Shore A	-1 Unit
	Weight Change	2.1%
Sodium Hydroxide 50 %	Ultimate Elongation	101% Retention
	Ultimate Tensile	107 % Retention
	100 % Modulus	104 % Retention
	Hardness Change Shore A	-4 Unit
	Weight Change	-0.1 %

2.03 HYPALON RUBBER WATERSTOPS

A. Hypalon rubber waterstops shall be Sikadur Combiflex by Sika Corporation or equal.

2.04 HYDROPHILIC WATERSTOPS

A. Hydrophilic waterstops shall be designed to expand and seal under hydrostatic conditions. At construction joints, the waterstops shall be Adeka Ultraseal MC 2010 M for wall/slab thickness greater than 9 inches, and Adeka Ultraseal KBA-1510FF for wall/slab thickness less than 9 inches or equal. At expansion joints, the waterstops shall be Adeka Ultraseal KM-3030M or equal.

B. Plate fabrications used to plug flow channels for future expansion or otherwise to close wall openings shall be caulked using hydrophilic waterstops designed for the application. Caulking agents shall be Adeka Ultraseal P201 or equal.

2.05 WATERSTOP ADHESIVE

A. Adhesive between waterstops and existing concrete shall be 20+F Contact Cement by Miracle Adhesives Corporation, Neoprene Adhesive 77-198 by JGF Adhesives, Sikadur 31 Hi-Mod Gel by Sika Corporation, DP-605 NS Urethane Adhesive by 3M Adhesive Systems.7 or equal.

2.06 JOINT SEALANT

A. Joint sealant shall comply with Section 07920 – Sealants and Caulking.

2.07 PREFORMED JOINT FILLER

A. Preformed joint filler material shall be of the preformed non-extruding type joint filler constructed of cellular neoprene sponge rubber or polyurethane of firm texture. Bituminous fiber type will not be permitted. All non-extruding and resilient-type preformed expansion joint fillers shall conform to the requirements and tests set forth is ASTM D 1752 for Type I, except as otherwise specified herein.

2.08 BACKER ROD

A. Backer rod shall comply with Section 07920 – Sealants and Caulking.

2.09 BOND BREAKER

A. Bond breaker shall be Super Bond Breaker as manufactured by Burke Company, San Mateo,

B. California; Hunt Process 225-TU as manufactured by Hunt Process Co., Santa Fe Springs, CA;

C. Select Cure CRB as manufactured by Select Products Co., Upland, CA; or equal. It shall contain a fugitive dye so that areas of application will be readily distinguishable.

2.10 CONTRACTION JOINT INSERTS

A. Contraction joint inserts shall be Transverse-Control Joints by Greenstreak Plastic Products or equal.

PART 3 - EXECUTION

3.01 GENERAL

A. Unless otherwise shown on the DRAWINGS, waterstops of the type specified herein shall be embedded in the concrete across joints as shown. All waterstops shall be fully continuous for the extent of the joint. Splices necessary to provide such continuity shall be accomplished in conformance to printed instructions of manufacturer of the waterstops. The CONTRACTOR shall take suitable precautions and means to support and protect the waterstops during the progress of the WORK and shall repair or replace at its own expense any waterstops damaged during the progress of the WORK. All waterstops shall be stored so as to permit free circulation of air around the waterstop material.

B. When any waterstop is installed in the concrete on one side of a joint, while the other half or portion of the waterstop remains exposed to the atmosphere for more than 14 days, suitable precautions shall be taken to shade and protect the exposed waterstop from direct rays of the sun during the entire exposure and until the exposed portion of the waterstop is embedded in concrete.

3.02 CONSTRUCTION JOINTS

A. Construction joints shall be as shown on the DRAWINGS and/or as approved by the CONSULTANT.

B. Unless noted otherwise on the DRAWINGS, construction joints shall be located near the middle of the spans of slabs, beams, and girders unless a beam intersects a girder at this point. In this case, the joints in the girders shall be offset a distance equal to twice the width of the beam. Joints in walls and columns shall be at the underside of floors, slabs, beams, or girders and the top of footings or floor slabs unless noted otherwise on DRAWINGS. Beams, girders, brackets, column capitals, haunches, and drop panels shall be placed at the same time as slabs. Joints shall be perpendicular to the main reinforcement.

C. Maximum distance between horizontal construction joints in slabs and vertical construction joints in walls shall be 45 feet - 0 inches. For exposed walls with fluid or earth on the opposite side, the spacing between vertical and horizontal joints shall be a maximum of 25 feet – 0 inches.

D. All corners shall be part of a continuous placement, and should a construction joint be required, the joint shall not be located closer than five feet from a corner.

E. All reinforcing steel and welded wire fabric shall be continued across construction joints. Keys and inclined dowels shall be provided as shown on the DRAWINGS or as directed by the CONSULTANT. Longitudinal keys shall be provided in all joints in walls and between walls and slabs or footings, except as specifically noted otherwise on the DRAWINGS. Size of keys shall be as shown on the DRAWINGS.

F. All joints in water bearing structures shall have a waterstop. All joints below grade in walls or slabs which enclose an accessible area shall have a waterstop.

3.03 CONTRACTION JOINTS

A. The slab reinforcement shall be stopped 4-1/2 inch from the joint; which is provided with a sleeve-type dowel, to allow shrinkage of the concrete of the second pour. Waterstop and/or sealant groove shall also be provided when specified on the DRAWINGS.

3.04 EXPANSION JOINTS

A. All expansion joints in water-bearing structures shall have a center-bulb type waterstop. All expansion joints below grade in walls or slabs which enclose an accessible area shall have a center-bulb type waterstop. Waterstop shall be as shown on DRAWINGS.

B. B. Preformed joint filler shall be installed with the edge at the indicated distance below or back from finished concrete surface, and shall have a slightly tapered, dressed, and oiled wood strip secured to or placed at the edge thereof during concrete placement, which shall later be removed to form space for sealing material. The space so formed shall be filled with a joint sealant material as specified herein. The joint sealant shall be isolated from the filler using a bond breaker.

3.05 CONTROL JOINTS

A. Contraction joints shall be formed with contraction joint inserts.

B. Sawcutting of contraction joints in lieu of forming will not be allowed unless otherwise noted on the DRAWINGS. Where sawcutting is allowed, joints shall be sawed as soon as the concrete can support foot traffic without leaving any impression, normally the same day as concrete is placed and in no case longer than 24 hours after concrete is placed.

C. Unless noted otherwise on DRAWINGS, depth of contraction joints shall be 1-1/2 inches in reinforced concrete and 1/3 of concrete thickness in unreinforced concrete.

D. The joint shall be filled with joint sealant.

3.06 SPLICES IN PVC WATERSTOPS

A. Splices in waterstops shall be performed by heat sealing the adjacent waterstop sections in accordance with the manufacturer's printed recommendations. It is essential that:

1. The material not be damaged by heat sealing.

2. The splices have a tensile strength of not less than 60 percent of the unspliced materials tensile strength.

3. The continuity of the waterstop ribs and of its tubular center axis be maintained.

B. B. Butt joints of the ends of two identical waterstop sections may be made while the material is in the forms.

C. All joints in waterstop involving more than two ends to be joined together, and all joints which involve an angle cut, alignment change, or the joining of two dissimilar waterstop sections shall be factory fabricated with not less than 24-inch long strips of material beyond the joint. Upon being inspected and accepted, such prefabricated waterstop joint assemblies shall be installed in the forms and the ends of the 24-inch strips shall be butt welded to the straight run portions of waterstop in place in the forms.

3.07 JOINT CONSTRUCTION

A. Setting PVC Waterstops: In order to eliminate faulty installation that may result in joint leakage, particular care shall be taken of the correct positioning of the waterstops during installation. Adequate provisions must be made to support the waterstops during the progress of the WORK and to ensure the proper embedment in the concrete. The symmetrical halves of the waterstops shall be equally divided between the concrete pours at the joints. The center axis of the waterstops shall be coincident with the joint openings. Maximum density and imperviousness of the concrete shall be ensured by thoroughly working it in the vicinity of all joints.

B. In placing PVC waterstops in the forms, means shall be provided to prevent them from being folded over by the concrete as it is placed. Unless otherwise shown, all waterstops shall be held in place with light wire ties on 12-inch centers which shall be passed through the edge of the waterstop and tied to the curtain of reinforcing steel. Horizontal waterstops, with their flat face in a vertical plane, shall be held in place with continuous supports to which the top edge of the waterstop shall be tacked. In placing concrete around horizontal waterstops, with their flat face in a horizontal plane, concrete shall be worked under the waterstops by hand so as to avoid the formation of air and rock pockets.

C. Joint Location: Construction joints, expansion joints, control joints, and contraction joints, shall be provided where shown on the DRAWINGS or as required for construction purposes. The location of all joints, of any type, shall be submitted for approval by the CONSULTANT.

D. Joint Preparation: Special care shall be used in preparing concrete surfaces at joints where bonding between two sections of concrete is required. Unless otherwise shown on the DRAWINGS, such bonding will be required at all horizontal joints in walls. Surfaces shall be prepared in accordance with the requirements of Section 03300 entitled "Cast-in-Place Concrete."

E. Adequate means shall be provided for anchoring the waterstop in concrete. Waterstops shall be positioned so that they are equally embedded in the concrete on each side of the joint.

F. Sealant application shall be in accordance with the manufacturer's printed instructions. The surfaces of the groove for the sealant shall not be coated and shall be clean. Concrete adjacent to waterstops shall be placed in accordance with the requirements of Section 03300 entitled, "Cast-in-Place Concrete."

G. The primer and sealant shall be placed strictly in accordance with the printed recommendations of the manufacturer, taking special care to properly mix the sealant prior to application. Where the finished joint will be visible, masking of the adjoining surfaces shall be carried out to avoid their discoloration. The sealant shall be neatly tooled into place and its finished surface shall present a clean and even appearance. All sealant shall cure at least 7 days before the structure is filled with water.

H. All sealant shall be installed by a competent waterproofing specialty contractor who has a successful record of performance in similar installations. Before WORK is commenced, the crew doing the WORK shall be instructed as to the proper method of application by a representative of the sealant manufacturer.

I. Thorough, uniform mixing of 2-part, catalyst-cured materials is essential; special care shall be taken to properly mix the sealer before its application. Before any sealer is placed, the CONTRACTOR shall arrange to have the crew doing the WORK carefully instructed as to the proper method of mixing and application by a representative of the sealant manufacturer.

J. Any joint sealant which, after the manufacturer's recommended curing time for the job conditions of the WORK hereunder, fails to fully and properly cure shall be completely removed; the groove shall be thoroughly sandblasted to remove all traces of the uncured or partially cured sealant and primer, and shall be re-sealed with the specified joint sealant. All costs of such removal, joint treatment, re-sealing, and appurtenant WORK shall be at the expense of the CONTRACTOR.

END OF SECTION

SECTION 3300 CAST-IN-PLACE CONCRETE

PART 1 – GENERAL

1.01 RELATEDDOCUMENTS

A. All applicable provisions of the Bidding and Contract Requirements, and Division 1 – General Requirements shall govern the WORK under this Section.

1.02 WORK INCLUDED

A. Provide all labor, materials, necessary equipment and services to complete the Cast-In-Place Concrete WORK, as indicated on the DRAWINGS, as specified herein or both except as for items specifically indicated as "NIC ITEMS".

B. Including but not necessarily limited to the following:

1. Cast-In-Place concrete walls, footings, foundation walls, paving, walks, slabs, formwork, reinforcing and all other components as indicated on the DRAWINGS.

1.03 RELATED WORK

A. Section 03050 - Concrete.

B. Section 03100 - Concrete Formwork.

C. Section 03200 - Concrete Reinforcement.

D. Section 03370 - Concrete Curing.

1.04 QUALITY ASSURANCE

A. Applicator Qualifications: Minimum of five years' experience on comparable concrete projects.

B. Requirements of Regulatory Agencies: Perform WORK in accordance with local building codes and/or Broward County Highway Construction and Engineering Division.

C. Allowable Tolerances: Flat WORK true to plane 1/8 inch in 10 feet.

D. Slump tests as per ASTM C-143, and test cylinders as per ASTM C-39.

1.05 TESTS

A. Submit proposed mix design of each class of concrete to appointed firm for review prior to commencement of WORK.

B. Testing firm will take cylinders and perform slump and air entrainment tests in accordance with ACI 301.

C. Tests of cement and aggregates will be performed to ensure conformance with requirements stated herein.

D. Three (3) concrete test cylinders will be taken for every 75 cubic yards or less of each class of concrete placed each day.

E. One (1) slump test will be taken for each set of test cylinders taken.

F. All testing shall be at the expense of the CONTRACTOR.

1.06 SUBMITTALS

A. Provide product data for specified products.

B. Test Reports: Reports of concrete compression, yield, air content, and slump tests.

C. Certificates:

1. Manufacturer's certification that materials meet specification requirements.
2. Material content per cubic yard of each class of concrete furnished.
   a. Dry weights of cement.
   b. Saturated surface-dried weights of fine and coarse aggregate.
   c. Quantities, type and name of admixtures.
   d. Weight of water.
3. Ready-mix delivery tickets, ASTM C-94.

D. Shop Drawings:

1. Show sizes and dimensions for fabrication and placing of reinforcing steel and bar supports.
2. Indicate bar schedules, stirrup spacing, and diagrams of bend bars.
3. Detail items of form systems affecting appearance of architectural concrete surfaces such as joints, tie holes, liners, patterns and textures. Show items in relation to entire form system.

1.07 DELIVERY, STORAGE AND HANDLING

A. Deliver reinforcement to project site in bundles marked with metal tags indicating bar size and length.

B. Handle and store materials to prevent contamination.

1.08 ENVIRONMENTAL REQUIREMENTS

A. Allowable concrete temperatures:

B. Hot Weather: Maximum 90° as per after C-94.

C. Do not place concrete during rain, unless protection is provided.

PART 2 - PRODUCTS

2.01 MATERIALS & MANUFACTURERS

A. Concrete Ready-Mix concrete ASTM C-94.

1. Cement:
   a. ASTM C 150, Type II
2. Admixtures:
   a. Air entraining: ASTM C-260
   b. Chemical: Type (as required) ASTM C-494
   c. Fly ash and pozzolans: ASTM C-618
   d. Vapor Barrier: 6 mil thick film of type recommended for below grade application.
3. Coarse aggregate: Not less than 50% clean, hard, crushed stone conforming to requirements of Table 2, size number 467 ASTM C-33.
4. Slump 4 inch maximum; plus tolerance 0, minus tolerance 1 inch.
5. Air content: 5% + 1%.
6. Mix proportioning:
   a. In accordance with ASTM C-94.
   b. 28 day compressive strength of moist cured laboratory samples 3,000 psi.

c. Use set retarding admixtures during hot weather only when approved by ENGINEER.
d. Minimum cement content 5 sacks/cubic yards.
e. Add air entraining agent to concrete work exposed to exterior.

7. Curing Material: Liquid membrane, ASTM C-309, Type 1.
8. Mixes:
   a. ASTM C-94.
   b. Mix concrete only in quantities for immediate use.
   c. Do not retemper or use set concrete.

B. Bars.

1. Deformed billet steel: ASTM A 615, Grade 60.

C. Wire Fabric:

1. Welded Wire Fabric Steel: ASTM A 185

D. Tie Wire: FS QQ-W-461-G, annealed steel, black 16 gauge. minimum.

E. Bar supports: Conform to "Bar Support Specification," CRSI Manual of Standard Practice.

F. Forms:

1. Conform with ACI 347, Chapter 3, Material and Formwork.
2. Lumber:
   a. Softwood framing lumber: Kiln dried, PS-20.
   b. Boards less than 1 1/2 inch thick and 2 inch wide, used for basic forms and form liners: Kiln dried.
   c. Grade marked by grading rules agency approved by American Lumber Standards Committee.
   d. Light framing or studs for board or plywood forms, 2 inch to 4 inch width and thickness Construction Standard grade.
   e. Boards for basic forms Construction Standard grade.
   f. Board surface: Smooth.
3. Plywood:
   a. Exterior type softwood plywood, PS 1-66.
   b. Each panel stamped or branded indicating veneer grades, species, type and identification.
   c. Wood faced plywood for architectural concrete surfaces.
      1) Panel veneer grades: B - C.
      2) Mill-oiled sides and mill-sealed edges of panels.
4. Ties
   a. Materials: Stainless Steel
   b. Type: Snap Ties
   c. Depth of break back: 1 inch.
   d. Maximum diameter ¼ inch.
5. Form coatings:
   a. Non-staining type.
   b. Agent: Pine oil derivative.

G. Water: Clean and potable.

PART 3 - EXECUTION

3.01 FORMWORK

A. Conform to ACI 347, Chapter 2, Construction; and Article 4.2, architectural Concrete.

B. Framing, Bracing and Plywood Form Liners: APA Form V 345-72.

C. Provide temporary openings in framework for concrete placement.

D. Fill voids of plywood joints with sealant and tool smooth.

E. CONTRACTOR is responsible for the design, construction, removal and complete safety of formwork and shoring.

F. Form construction shall be provided to shape, lines dimensions of members shown; substantial, tight enough to prevent leakage, and properly braced or tied to maintain position and size, form sides and bottoms of members unless specifically excepted.

3.02 REINFORCING

A. Fabrication shall be provided to latest ACI Manual of Practice ACI-315.

B. Reinforcing free from excessive rust, scale or coating reducing bond. Bars bent cold in fabrication plant. Chairs, support bars, and other accessories furnished to carry and provide coverage as required by ACI Manual.

C. Unless otherwise indicated the minimum coverage is 3 inch for footings (slabs to have 3/4 inch minimum). Call any "crowding" of reinforcement to ENGINEER's attention during placing.

D. Splices shall be Mesh 6 inch lap, bars 30 diameter minimum.

E. Conduit or pipes embedded in concrete must have specific approval and be located to avoid cracking or reduction in strength. Provide extra strong pipe sleeves where pipes are allowed to pierce concrete beams or walls.

F. Placement:

1. Bar supports: CRSI 65.
2. Reinforcing bars: CRSI 63.

G. Steel Adjustment:

1. Move within allowable tolerances to avoid interference with other reinforcing steel, conduits, expansion joints, or embedded items.
2. Do not move bars beyond allowable tolerances without concurrence of ENGINEER.
3. Do not heat, bend or cut bars without concurrence of ENGINEER.

H. Splices:

1. Lap splices: Tie securely with wire to prevent displacement of splices during placement of concrete.
2. Splice devices: Install in accordance with manufacturer's written instructions.
3. Welding: Perform in accordance with AWS Standards.
4. Do not splice bars except at locations shown on DRAWINGS without concurrence of ENGINEER.

I. Wire Fabric:

1. Install in longest practicable length.

2. Lap adjoining pieces one full mesh minimum, and lay splices with 16 gauge wire.
3. Offset end laps in adjacent widths to prevent continuous laps.

J. Cleaning: Remove dirt, grease, oil, loose mill scale, excessive rust, and foreign matter that will reduce bond with concrete.

K. Protection During Concreting: Keep reinforcing steel in proper position during concrete placement.

3.03 JOINTS

A. Construction pours shall be continuous pours except where joints are indicated. No additional joints except by special acceptance in writing by the ENGINEER. Allow no construction or interrupted pour joints in any exposed surface, unless treated as part of design.

1. Where indicated and as detailed, provide saw cut type construction joints of sizes as called for on the DRAWINGS.

B. Expansion joints shall be constructed as shown on DRAWINGS.

1. Expansion material shall be ½ inch continuous full depth strips set ½ inch below finish surface with ½ inch x ½ inch joint sealant filler above.

3.04 3.04 BUILT-IN ANCHORING DEVICES, FIXTURES, PIPE SLEEVES AND OTHER INSERTS

A. Build-in and coordinate as required and called for on the DRAWINGS all items to be constructed into concrete such as anchoring devices, fixtures, piping, sleeves and other inserts and items as required for a complete installation.

3.05 INSPECTION

A. Assure that excavation and formwork are completed, with smooth rubbed finish, and that excess water is removed.

B. Check that reinforcement is secured in place.

C. Verify that expansion joint material, anchors, and other embedded items are secured in position.

D. Verify anchors, seats, plates, reinforcement, and other items to be cast into concrete are accurately placed, held securely, and will not cause hardship in placing concrete.

3.06 CONCRETE QUALITY

A. Design of mix shall be a laboratory designed mix to satisfy the following requirements and shall be approved by the ENGINEER.

1. Ready mixed concrete as per ASTM C-94 with 28 day strength 3,000 psi minimum, for all standard grey concrete work.
2. Proportion the concrete to work readily into forms and around reinforcement, without excessive manipulation, segregation or water gain. Approved additives may be used to achieve the above results.
3. Slump shall be maximum 3 inch for footings, and for all other concrete shall be 3 inch to 5 inch.
4. Submit for approval representative test results by independent laboratory to substantiate proposed mix design.

3.07 PREPARATION FOR POURS

A. Notify the ENGINEER and other inspectors at least 36 hours prior to inspection.

B. Equipment forms, and reinforcing shall be clean and wet down, reinforcing firmly secured in place, runways set up and not resting on or displaying reinforcing.

C. Prepare previously placed concrete by cleaning with steel brush and applying bonding agent. Apply bonding agent in accordance with manufacturer's instruction.

D. At locations where new concrete is dowelled to existing WORK, drill holes in existing concrete, insert steel dowels, and pack solid with non-shrink grout.

3.08 PLACING

A. Mixing and conveying shall be as per ASTM C-94 and as follows:

1. Maximum elapsed time from addition of water to placing in forms is 60 minutes, (total mixing time).
2. Concrete handled and placed by methods which keep concrete plastic, prevent separation of materials, and do not displace reinforcement.

B. Deposit as close as possible to final position to avoid segregation of materials. Restrict drop to 3 foot maximum (less for exposed concrete), using tremie if necessary.

1. Compact by mechanical vibration to thoroughly work around reinforcing and eliminate honeycomb.

C. Place concrete in accordance with ACI 301.

D. Hot Weather Placement: ACI 301.

E. Cold Weather Placement: ACI 301.

F. Ensure reinforcement, inserts, embedded parts and formed joints are not disturbed during concrete placement.

G. Maintain concrete cover around reinforcing as follows:

Item	**Coverage**
Beams	1 ½ inch
Supported Slabs	¾ inch
Column Ties	1½ inch
Walls (exposed to weather or backfill)	2 inch
Footings and Concrete Formed Against Earth	3 inch
Slabs on Fill	2 inch

H. Place concrete continuously between predetermined construction and control joints. Do not break or interrupt successive pours such that cold joints occur.

I. Saw cut control joints at an optimum time after finishing. Use 3/16 inch thick blade, cutting 1/3 depth of slab thickness.

J. Separate exterior slabs on fill from vertical surfaces with joint filler. Extend joint filler from bottom of slab to within 1/2 inch of finished slab surface.

K. Excessive honeycomb or embedded debris in concrete is not acceptable. Notify ENGINEER upon discovery.

3.09 CONCRETE CURING

A. Curing for standard grey WORK after finishing, cure concrete by keeping moist for one (1) week after placement. Floors and vertical surfaces may be sprayed with an approved curing compound to retard evaporation of water, if spraying is not objectionable because of future finishing requirements. Begin curing operations as soon as concrete has attained its initial set. Keep exposed concrete surface moist for at least one (1) week.

3.10 CONCRETE FINISHING

A. Unexposed concrete WORK shall be patched and repaired immediately after removal of forms.

1. Cut off metal ties a minimum of 1 inch back from surface of concrete.
2. Moderate honeycomb cut out and prepared for patching. Severe honeycomb with exposed steel reinforcing is to be removed or "united" at the discretion of the ENGINEER.
3. Wet areas for patching and pack carefully with rich mortar rubbed to match surface.

B. Provide concrete surfaces to be left exposed, walls, columns, beams, with smooth rubbed finish.

C. Provide Class B tolerances to floor slabs and toppings according to ACI 301.

D. Pitch to drains 1/4 inch per foot.

E. Exposed concrete work shall be patched and repaired as accepted by ENGINEER after consultation. Patching and rubbing will be kept to a minimum if possible, but when necessary will be done with great care to obtain maximum degree of matching in color and texture to adjacent finished concrete surfaces.

F. Monolithic finish using care to obtain a level surface; floors out of level or with variation greater than 1/8 inch in 10 feet shall be corrected.

G. All finishes shall be as called for on the DRAWINGS.

3.11 SEPARATE FLOOR TOPPINGS

A. Prior to placing, roughen concrete base course and remove foreign materials. Broom and vacuum clean.

B. Place dividers, edge strips, reinforcing and other items to be cast in.

C. Apply bonding agent on base course in accordance with manufacturer's instructions. Apply sand and cement slurry coat on base course immediately prior to placing toppings.

D. Place concrete floor toppings to required lines and levels.

3.12 PATCHING

A. Notify ENGINEER immediately upon removal of forms.

B. Patch imperfections.

3.13 DEFECTIVE CONCRETE

A. Modify or replace concrete not conforming to required levels and lines, details, and elevations.

B. Repair or replace concrete not properly placed or of the specified type.

3.14 FIELD QUALITY CONCRETE

A. Maintain records of placed concrete items. Record date, location of pour, quantity, air temperature, and test samples taken.

3.15 PROTECTION

A. Immediately after placement, protect concrete from premature drying, excessively hot or cold temperatures, and mechanical injury.

B. Maintain concrete with minimal moisture loss at relatively constant temperature for period necessary for hydration of cement and hardening of concrete.

C. During curing period, protect concrete from damaging mechanical disturbances, water flow, loading, shocking, and vibration.

3.16 APPLICATION OF BOND COAT FOR CONCRETE LEVELING COAT FOR PAVERS AND TEXTURED SURFACES

A. Provide installation as per manufacturer's standard printed specifications, instructions and recommendations.

END OF SECTION

SECTION 03315 GROUT

PART 1 - GENERAL

1.01 THE REQUIREMENT

A. The CONTRACTOR shall furnish all materials for grout in accordance with the provisions of this Section and shall form, mix place, cure, repair, finish, and do all other WORK as required to produce finished grout, all in accordance with the requirements of the Contract Documents.

1.02 RELATED WORK SPECIFIED ELSEWHERE

A. Section 03300 - Cast-in-Place Concrete

1.03 REFERENCE SPECIFICATIONS, CODES, AND STANDARDS

A. Specifications, codes, and standards shall be as specified in Section 03300 entitled "Cast-in-Place Concrete," and as referred to herein.

B. Additional Commercial Standards

1. CRD-C 621 - Corps of Engineers Specification for Nonshrink Grout

1.04 SUBMITTALS

A. The CONTRACTOR shall submit certified test results verifying the compressive strength, shrinkage, and expansion requirements specified herein; and manufacturer's literature containing instructions and recommendations on the mixing, handling, placement and appropriate uses for each type of grout used in the WORK.

PART 2 - PRODUCTS

2.01 PREPACKAGED NON-SHRINK CEMENTITIOUS GROUT

A. Nonshrink grout shall be a prepackaged, inorganic, non-gas liberating, nonmetallic, cement-based grout requiring only the addition of water. Manufacturer's instructions shall be printed on each bag or other container in which the materials are packaged. The specific formulation for each class of nonshrink grout specified herein shall be that recommended by the manufacturer for the particular application.

B. Nonshrink grouts shall have a minimum 28 day compressive strength of 5000 psi (ASTM C109, restrained), shall have no shrinkage (0.0 percent) and a maximum 4.0 percent expansion in the plastic state when tested in accordance with ASTM C 827, and shall have no shrinkage (0.0 percent) and a maximum of 0.2 percent expansion in the hardened state when tested in accordance with CRD C 621.

C. Cement based grout shall be Five Star Grout as manufactured by Five Star Products, Inc., Fairfield, Connecticut, or equal.

D. Cementitious non-shrink grout shall be used at locations where there are no dynamic loads, the grout will not come in contact with wastewater or wastewater gases, and where non-shrink grout is identified on the DRAWINGS. Applications include, but are not limited to, structural steel column base plates, gate frames and guides, and precast concrete to cast-in-place concrete joints.

2.02 PREPACKAGED NON-SHRINK EPOXY GROUT

A. Epoxy-based non-shrink grout shall be a three component, 100 percent solids, solvent-free system designed for machinery grouting. Applications include, but are not limited to, anchoring, pump and motor bases, and any other equipment imparting dynamic loads to the support system.

B. When non-shrink grout is identified on the DRAWINGS in submerged (water or wastewater) or under wastewater gas environment, epoxy-based non-shrink grouts shall be used.

C. The epoxy grout shall be delivered to site as prepackaged, three-component systems composing of the resin, hardener, and specially blended aggregates. The components shall be stored as recommended by the manufacturer until use.

D. Non-shrink epoxy grout shall be Five Star DP Epoxy Grout by Five Star Products, Inc., Fairfield, Connecticut, or equal.

2.03 CEMENT GROUT

A. Cement grout shall be composed of Portland cement sand in the proportion specified in the Contract Documents and the minimum amount of water necessary to obtain the desired consistency. If no proportion is indicated, cement grout shall consist of one part Portland cement to three parts sand. Water amount shall be as required to achieve desired consistency without compromising strength requirements. White Portland cement shall be mixed with Portland cement as required to match color of adjacent concrete.

B. The minimum compressive strength at 28 days shall be 4000 psi.

C. For beds thicker than 1-1/2 inch and/or where free passage of grout will not be obstructed by coarse aggregate, 1-1/2 parts of coarse aggregate having a top size of 3/8 inch should be added.

D. Sand shall conform to the requirements of ASTM C144.

2.04 DOWEL/ANCHOR BOLT ADHESIVE SYSTEM

A. When rebar or anchor bolts are specified to be drilled in and grouted on the DRAWINGS, an adhesive system specified in Section 03300 entitled "Cast-in-Place Concrete" shall be used for dowels and an adhesive system specified in Section 05050 entitled "Metal Fastening" shall be used for anchor bolts.

2.05 CURING MATERIALS

A. Curing materials shall be as recommended by the manufacturer.

2.06 CONSISTENCY

A. The consistency of grouts shall be that necessary to completely fill the space to be grouted for the particular application. Dry pack consistency is such that the grout is plastic and moldable but will not flow. Where "dry pack" is called for in the Contract Documents, it shall mean a grout of the above described consistency; the type of grout to be used shall be as specified herein for the particular application.

2.07 MEASUREMENT OF INGREDIENTS

A. Prepackaged grouts shall have ingredients measured by means recommended by the manufacturer.

PART 3 - EXECUTION

3.01 GENERAL

A. All curing, and protection of cement grout shall be as specified in Section 03370 entitled "Concrete Curing" (Methods 1 and 2); or as recommended by manufacturer. The finish of the grout surface shall match that of the adjacent concrete.

B. All mixing, surface preparation, handling, placing, consolidation, and other means of execution for prepackaged grouts shall be done according to the instructions and recommendations of the manufacturer.

3.02 CONSOLIDATION

A. Grout shall be placed in such a manner, for the consistency necessary for each application, so as to assure that the space to be grouted is completely filled.

END OF SECTION

SECTION 09900 PROTECTIVE COATINGS

PART 1 - GENERAL

1.01 WORK INCLUDED

A. This Section covers the WORK required to provide all labor, materials, equipment and incidentals to perform all of the necessary surface preparation and painting required to complete this contract in its entirety.

B. It is the intent of these Specifications to paint all concrete, exposed miscellaneous metal, pipe, fittings, valves, equipment, and all other WORK required to be painted unless otherwise specified. Minor items omitted in the schedule of WORK shall be included in the WORK of this Section where they come within the general intent of the specifications as stated herein.

C. The following surfaces or items are "NOT" required to be coated:

1. Aluminum: gratings, checkered plates, hatches, handrails, toe boards, stairways and walkways
2. Stainless steel, brass, bronze, and aluminum other than exposed tubing
3. Piping buried in the ground or embedded in concrete
4. Ducts, pipes and other miscellaneous items covered with insulation or plastic coated
5. Concealed surfaces of pipe or crawl spaces
6. Finish hardware
7. Nonferrous architectural metals, unless specifically noted otherwise
8. Packing glands and other adjustable parts and nameplates of mechanical equipment
9. Exterior concrete slabs and equipment

1.02 RELATED WORK

A. Individual specification sections.

1.03 ABBREVIATIONS

A. The abbreviations and definitions listed below, when used in this Section, shall have the following meanings:

ANSI	American National Standards Institute
ASTM	American Society of Testing Materials
AWWA	American Water Works Association
DFT	Dry Film Thickness
FPP	Fiberglass Reinforced Plastic
HCI	Hydrochloric Acid
MDFT	Minimum Dry Film Thickness
MDFTPC	Minimum Dry Film Thickness Per Coat mil Thousandths of an Inch
MIL-P	Military Specification - paint
NACE	National Association of Corrosion Engineers
NSF	National Sanitary Foundation
OSHA	Occupational Safety and Health Act
SFPG	Square Feet Per Gallon
SFPGPC	Square Feet Per Gallon Per Coat
SP	Surface Preparation
SSPC	Steel Structures Painting Council

1.04 SUBMITTALS

A. Submittals will be made with the coating system data sheet included at the end of this section.

B. The following shall be submitted for each proposed coating system: manufacturer's specifications, surface prepared details, application procedures, technical data sheets, and dry film thickness or coverage.

C. Unless otherwise specified, hereinafter and before any painting work is started prepare with type of paint and application specified, and on similar substrate, to which paint is to be finally applied, samples not less than 8" in size.

D. Furnish additional samples as required until colors, finishes, and textures are acceptable. Retain accepted samples to be used as the quality standard for final finishes.

E. Before proceeding with the WORK under this Section, finish one complete space, or item of each color scheme required showing selected colors, finishes and textures are acceptable. Retain accepted samples to be used as the quality standard for final finishes.

F. Schedule of Painting Operations: The CONTRACTOR shall submit for review a complete schedule of painting operations 30 days from the notice to proceed.

1.05 QUALITY ASSURANCE

A. The paint manufacturer shall provide a representative to visit the job site at intervals during surface preparation and painting as may be required for product application quality assurance and to determine compliance with manufacturer's instructions and these Specifications, and as may be necessary to resolve field problems attributable to, or

associated with, the manufacturer's products furnished under this Contract.

B. A site visit report shall be prepared and submitted by paint manufacturer's representative documenting compliance with the manufacturer's recommended applications.

1.06 INSPECTION

A. The CONTRACTOR shall give the ENGINEER a minimum of three days advance notice of the completion of any surface preparation work or start of coating application work.

B. Before application of the prime coat and each succeeding coat, all surfaces to be painted shall be inspected by the ENGINEER. Any and all defects of deficiencies shall be corrected by the CONTRACTOR before application of any subsequent coating.

C. Coating applications shall be checked for required MDFT as per these specifications. All coated surfaces failing to meet the MDFT requirements shall be rejected.

D. For all coatings subject to immersion, full cure must be obtained for the completed system. Consult the coatings manufacturer's written instructions for these requirements. The coatings shall not be immersed for any purpose until completion of the curing cycle.

E. Inspection by the ENGINEER of the waiver of inspection of any particular portion of the WORK shall not be construed to relieve the CONTRACTOR of his responsibility to perform the WORK in accordance with these specifications.

1.07 PAINT DELIVERY AND STORAGE

A. All materials shall be new and shall be delivered to the project site in unopened containers

that plainly show, at the time of use, the designated name, date of manufacturer, color, and name of manufacturer. Paints shall be stored in a suitable protected area that is heated or cooled as required to maintain temperatures within the range recommended by the paint manufacturer.

1.08 PROJECT SITE CONDITIONS

A. The location of this project is Broward County, Florida requires observance and conformance with EPA Volatile Organic Compound (VOC) restrictions. EPA limits the content of VOC's in painting materials to 2.5 lb/gallon. Information regarding the VOC content of proposed paints will be required during submittals.

1.09 WARRANTY

A. The CONTRACTOR shall warrant to the CITY and guarantee the WORK under this Section against defective workmanship and materials for a period of two years commencing on the date of Final Acceptance of the Work. This warranty does no alleviate the CONTRACTOR or supplier of implied or other specified or written warranties for long term product quality.

PART 2 - PRODUCTS

2.01 GENERAL

A. Products containing lead will not be allowed. Oil shall be pure boiled linseed oil.

2.02 PAINT MATERIALS

A. Products shall be as manufactured by Tnemec Company, Inc., Kerneos Alumininate Technologies or approved equals.

B. The following paint products are by Tnemec Company, Inc. and Kerneos, as applicable, and are used for the basis of establishing the desired quality expected for the project.

Product Type	Company	Product Name
Coal Tar Epoxy	Tnemec	46H-413
Polyamine Epoxy (Non Potable)	Tnemec	Series 104 H.S. Epoxy
Vinyl Ester	Tnemec	Series 120 Vinester
Polyamide Epoxy	Tnemec	Series 66Hi-Build Epoxoline
Mortar	Kerneos	Supercoat PG

2.03 COLORS

A. Provide as selected by the CITY.

B. Formulate with colorants free of lead, lead compounds, or other materials which might be affected by presence of hydrogen sulfide or other gas likely to be present at the project.

C. Proprietary identification of colors if for identification only. Any authorized manufacturer may supply matches.

2.04 TESTING GAUGES

A. Furnish a magnetic type dry film thickness gauge, to test coating thickness specified in mils, as manufactured by:
   1. Nordson Corp., Anaheim, CA, Mikrotest
   2. Or equal

B. Furnish an electrical holiday detector, low voltage, wet sponge type to test finish coat, except zinc primer, high-build elastomeric coatings, and galvanizing, for holidays and

discontinuities as manufactured by:
1. Tinker and Rasor, San Gabriel, CA, Model M-1
2. Or equal

C. Furnish a high voltage holiday detector for elastomeric coatings in excess of 25 mils dry film thickness. Unit to be as recommended by the coatings manufacturer.

PART 3 - EXECUTION

3.01 PROTECTION OF SURFACES NOT TO BE PAINTED

A. Mask or otherwise protect hardware, lighting fixtures, switch plates, aluminum surfaces, machined surfaces, couplings, shafts, bearings, nameplates, and other surfaces not intended to be painted which cannot be removed.

B. Provide drop cloths to prevent paint materials form falling on or marring adjacent surfaces.

C. Protect working parts of mechanical and electrical equipment from damage during surface preparation and painting processes. Openings in motors shall be masked to prevent paint and other materials from entering motors.

3.02 ENVIRONMENTAL CONDITIONS

A. Coatings shall not be applied in temperature exceeding the manufacturer's recommended maximum and minimum allowable, nor under adverse conditions such as dust, smoke-laden atmosphere, damp or humid weather.

3.03 SAFETY

A. Coating shall be performed in strict accordance with the safety recommendations of the coating manufacturer; with the safety recommendations of the national Association of Corrosion Engineers contained in the publication, Manual for Painter Safety; Federal, state and local agencies having jurisdiction.

B. Ultimate responsibility for safety is CONTRACTOR's.

3.04 PREPARATION OF SURFACES

A. All surfaces to be coated shall be prepared as specified herein and shall be dry and clean before coating. Specific surface preparation shall be specified for the individual coating systems.

B. Steel shall be blasted unless otherwise specified. Blasting shall be done with a centrifugal wheel or compressed air blasting equipment, using proper abrasives to attain an average profile depth of 1.5 mils. Do not re-use sand or flint abrasives. Short abrasives must be thoroughly clean of contamination before re-use. Blow dust and grit from surface with clean, dry air. Coat within 8 hours or before rust contamination occurs.

C. All concrete shall have cured for 28 days.

3.05 COATING SYSTEM INDEX

A. The following is a general index to the coating system description described herein:

System No.	Title
1	Exterior of New Concrete
2	Interior of New Valve Vaults, Air Release Structures
3	Exposed Metal Highly Corrosive
4	Submerged Metal - Domestic Sewage

5	Exposed Metal - Moderate Corrosive Conditions
6	Concrete Lining – Pump Station Wet Well and Manhole
7	Interior and Exterior Concrete

3.06 COATING SYSTEMS

A. System No. 1 Exterior of New Concrete Structures and Valve Vault

Surface Preparation:	All curing oils, form oils, laitance, soluble salts, and loose concrete must be removed. Concrete must be dry and thoroughly clean before coatings.
Prime Coat:	None required.
Top Coat:	Coal tar epoxy at 8.0 mils DFT per coat.
MDFT:	16 mils DFT for two-coat system. Allow minimum of 24 hours drying time between coats.
Color:	First Coat – Red Second Coat – Black

B. System No. 2 – Interior of New Valve Vaults, Air Release Structures

Surface Preparation:	Concrete: All curing oils, form oils, laitance, soluble salts, and loose concrete must be removed. Concrete must be dry and thoroughly clean before coatings. Concrete shall be cured 28 days, brush off blast.
Filler/Surfacer:	Concrete substrate surface with cracks and/or voids greater than ½ : in depth or width or areas where underlying aggregate has been exposed shall be patched with filler and surfacer. Material shall be applied in accordance with the manufacturer's application instructions.
Prime Coat:	Vinyl Ester 12.0 to 18.0 mils DFT or polyamide epoxy, Tnemec Series 66 or 69 Hi-Build, 4 mils DFT.
Top Coat:	Vinyl Ester 12.0 to 18.0 mils DFT or polyamide epoxy, Tnemec Series 66 or 69 Hi-Build, 8 mils DFT.
MDFT:	Minimum 30 mils of DFT for two-coat vinyl ester system or 12 mils MDFT polyamide epoxy system. Time between coats and method of application shall be as per manufacturer's written instructions.
Color:	First Coat – Beige (5002) Second Coat – Gray (5001)

C. System No. 3 – Exposed Metal – Highly Corrosive

Surface Preparation:	Abrasive blast clean to an SSPC-SP10 (near white metal).
Prime Coat:	Polyamine epoxy at 6.0 to 8.0 mils DFT.
Top Coat:	High build acrylic polyurethane at 2.0 to 4.0 mils DFT.
MDFT:	9 mils DFT for two-coat system.
Color:	As selected by CITY from manufacturer's standard available colors.

D. System No. 4 – Submerged Metal – Domestic Sewage, Pump Station Wet Well Piping

Surface Preparation:	Abrasive blast or centrifugal wheel blast, SSPC-SP5. Prime Coat: Polyamide, anti-corrosive, epoxy primer, 1 coat, 2.5 MDFT.
Top Coat:	Coat-tar epoxy, 2 coats, 16 MDFT.
MDFT:	18.5 mils MDFT for system.

E. System No. 5 – Exposed Metal – Moderate Corrosive Conditions, Valve Pit Piping, and Valves

Surface Preparation:	Abrasive blast or centrifugal wheel blast, SSPC-SP10. Prime Coat: Polyamide, anti-corrosive, epoxy primer, 1 coat, 2.5 MDFT.
Top Coat:	Polyamide epoxy, Tnemic Series 66 or 69, 2 coats, 8 MDFT
MDFT:	10.5 mils DFT for three coats.

F. System No. 6 –Concrete Lining – Pump Station Wet Well, and Manholes

Surface Preparation:	All curing oils, form oils, laitance, soluble salts, and loose concrete must be removed. Concrete must be saturated with water prior to application of the lining materials.
Inflow Prevention:	Existing manholes may need rapid setting crystalline enhanced hydraulic cement product specifically formulated for infiltration control that shall be used to stop minor flows. The material shall have the following strength requirements: Compressive Strength (ASTM C597B) 600 psi (24 hours) 1,000 psi (7 days) and Bond Strength (ASTM C321) 30 psi (1 hour), 80 psi (1 day).
Lining:	See Section 02770 Sanitary Sewer Lining.
Curing:	If environment is not moist enough for natural curing, the CONTRACTOR may be required to apply a curing compound per the requirements of ASTM C309.

G. System No. 7 – Interior and Exterior Concrete

Surface Preparation:	Abrasive blast, 4,000 psi
Coating:	3 coats, Polyamide epoxy, Tnemec Series 66 or 69 Hi- Build Epoxoline.
MDFT:	12 mils DFT for three-coat application.

3.07 UNIDENTIFIED SURFACES

A. Any surfaces not specifically named in the schedule and not specifically accepted shall be prepared, primed, and coated in the manner and with material consistent with these Specifications. The ENGINEER shall select which of the manufacturer's products, whether the type is indicated herein or not, shall be used for such unnamed surfaces. The painting shall be done within the scope of the contract.

3.08 WORKMANSHIP

A. On metal surfaces apply each coat of paint at the rate specified by the manufacturer to achieve the minimum dry mil thickness required. If material has thickened or must be diluted for application by spray gun, the coating shall built up to the same film thickness achieved with undiluted material. One gallon of paint as originally furnished by the manufacturer shall not cover a greater area when applied by spray gun than when applied unthinned by the application of an additional coat(s). On masonry, application rates will vary according to surface texture; however, in no case shall the manufacturer's stated coverage rate be exceeded. On porous surfaces, it shall be the painter's responsibility to achieve a protective and decorative finish either by decreasing the coverage rate or applying additional coats of paint.

B. All safety equipment shall be painted in accordance with OSHA Standards as approved.

C. Materials shall be mixed in proper containers of adequate capacity. All materials shall be thoroughly stirred before use and shall be kept stirred while using. No unauthorized thinners or other materials shall be added to any paint.

D. Only skilled painters shall be used on the WORK and specialists shall be employed where required.

E. Steel members, metal castings, mechanical and electrical equipment and other metals which are shop primed before deliver at the site will not require a prime coat on the job. All piping and other bare metals to be painted shall receive one coat of primer before exposure to the weather, and this prime coat shall be the first coat as specified in the painting schedule.

F. Finish surfaces shall not show brush marks or other irregularities. Undercoats shall be thoroughly and uniformly sanded with No. 00 sandpaper or equal to remove defects and provide a smooth, even surface.

G. Before final acceptance of the WORK, all damaged surfaces of coating shall be cleaned and repainted as directed by the ENGINEER.

3.09 APPLICATION SCHEDULE

A. System No. 1 – Exterior of New Concrete– This system shall be used on the exterior of all new pre-cast concrete valve vaults, manholes, and constructed wet well.

B. System No. 2 – Interior of New Valve Vaults and Air Release Structures– This system shall be used in the interior of all new concrete valve vaults. Pre-cast concrete shall be coated prior to installation. Coating shall extend through the pre- cast joints.

C. System No 3 – Exposed Metal – Highly Corrosive– This system shall be used on all metal surfaces exposed to weather including equipment, conduits, piping, exposed metal frames and elsewhere as scheduled. Galvanized piping and aluminum hatches do not require painting.

D. System No. 4 – Submerged Metal – Domestic Sewage, Pump Station Wet Well Piping– This system shall be used for wet well piping, wet well ferrous metals.

E. System No. 5 – Exposed Metal – Moderate Corrosive Conditions, Valve Pit Piping, and Valves– This system shall be used for interior piping, structural steel, and interior dry pit metals.

F. System No. 6 –Concrete Lining – Pump Station Wet Well, and Manholes– This system shall be used in wet well and manholes. Existing manholes to be rehabilitated as specified.

G. System No. 7 – Existing Concrete Exposed– This system shall be used on the headworks structure area as specified in the contract DRAWINGS.

3.10 CLEANUP

A. It shall be the responsibility of the CONTRACTOR to collect and dispose of property, all waste materials from the site in accordance with all requirements of the Federal, state, and local environment protection agencies.

B. At completion of the WORK, remove all paint where it has been spilled, splashed, splattered, sprayed, or smeared on all surfaces, including glass, light fixtures, hardware, equipment, painted and unpainted surfaces.

C. After completion of all paintings, the CONTRACTOR shall remove from the job site all painting equipment, surplus materials and debris resulting from this WORK.

3.11 MANUFACTURER'S SERVICE

A. Furnish paint manufacturer representative to visit job site at intervals during surface preparation and painting as may be required for product application quality assurance, and to determine compliance with manufacturer's instructions and these specifications, and as may be necessary to resolve field problems attributable to, or associated with, manufacturer's products furnished under this Contract.

3.12 COATING SYSTEM DATA SHEET

A. To be included with submittal. See form on next page.

END OF SECTION

SECTION 11311 SUBMERSIBLE WASTEWATER PUMPS

PART 1 - GENERAL

1.01 DESCRIPTION

A. Furnish all labor, materials, equipment and incidentals required to install, complete, and ready for operation, submersible wastewater pumps as shown in the DRAWINGS and specified herein.

B. These Specifications are intended to give a general description of what is required, but do not cover all details that will vary in accordance with the requirements of the equipment as offered. All materials, equipment, and appurtenances for the complete pumping units, whether specifically mentioned in these Specifications or not, shall be included.

C. The pump station shall be comprised of a concrete wet well, concrete valve vault, concrete meter vault, two submersible wastewater pumps with controls, discharge piping and all appurtenances as specified herein and shown on the DRAWINGS. The pump station will pump raw, unscreened, domestic wastewater.

D. It is expected that the equipment as offered incorporate the highest standards for this type of service.

1.02 RELATED SECTIONS

A. Concrete work and installation of anchor bolts is included in Division 3, but anchor bolts shall be furnished under this Section.

B. Piping and Valves are included in Division 15.

C. Other Sections as applicable.

1.03 REFERENCES

A. ANSI/Hydraulic Institute (HI) Standards;

1. ANSI/HI 11.6-2012. Rotodynamic Submersible Pumps: for Hydraulic Performance, Hydrostatic Pressure, Mechanical and Electrical Acceptance Tests

B. ANSI/HI 14.6-2011.Rotodynamic Pumps: for Hydraulic Performance Acceptance Tests

C. ANSI/National Electrical Manufacturers Association (NEMA) American National Standard Motors and Generators MG-1

D. International Organization for Standardization (ISO).

E. Applicable sections of the NEC, IEEE, ANSI and NEMA.

1.04 QUALIFICATIONS

A. To assure unity of responsibility, the pumps, motors, automatic discharge connection system, hatches, control system and all appurtenances shall be furnished by the pump manufacturer and coordinated by the local pump manufacturer's representative. The CONTRACTOR and pump manufacturer shall assume responsibility for the satisfactory installation and operation of the entire pumping system.

B. The pumps covered by these Specifications are intended to be standard pumping equipment of proven ability as manufactured by a reputable manufacturer having a minimum of ten years' experience in the production of such pumps. The pumps furnished shall be new and unused and be designed, constructed, and installed in accordance with the best practice and

methods of the industry. Pumps shall be manufactured in accordance with the Hydraulic Institute Standards.

C. The pumps, motors, control system, and appurtenances shall be furnished by Xylem-Flygt, or approved equal.

1.05 WARRANTY

A. The pump manufacturer shall provide a full, non-prorated, 5-year warranty covering all parts, service, and labor for 5 years from date of CITY acceptance.

B. The pump manufacturer shall provide a full, non-prorated, lifetime warranty covering the pump seals for all parts, service, and labor required to replace failed seals and all consequential pump damage.

1.06 SUBMITTALS

A. Copies of all materials required to establish compliance with the Specifications shall be submitted in accordance with the provisions of the General Conditions. Submittal shall include at least the following:

1. Shop and erection drawings showing all, important details of construction, dimensions, and anchor bolt locations.
2. Descriptive literature, bulletins, and catalogs of the equipment.
3. Data on the characteristics and performance of each pump. Data shall include a certified performance test, based on actual shop tests of the sale units, which show that they meet the specified requirements for head, capacity, efficiency, submergence, and horsepower. Curves shall be submitted on 8½ x 11 sheets, at as large a scale as is practical, including grid-lines. Curves shall be plotted from no flow at shut off head to the maximum flow at the minimum pressure recommended for the proposed pump. Curves also shall include NPSHR, Horsepower, and hydraulic efficiency. Catalog sheets showing a family of curves will not be acceptable. All tests shall be in accordance with ANSI/HI 11.6-2012.
4. Complete master wiring diagrams, elementary or control schematics, including coordination with other electrical control devices operating in conjunction with the pump control system and suitable outline drawings shall be furnished for approval before proceeding with manufacture. Standard pre-printed sheets or drawings simply marked to indicate applicability to this contract will not be acceptable.
5. A scale drawing showing the layout of the pump control panel shall be furnished. The layout shall indicate every device mounted on the door with complete identification.
6. The total weight of the equipment including the weight of the single largest item.
7. A complete, total Bill of Materials for all equipment.
8. A list of the manufacturer's recommended spare parts to be supplied in addition to those specified in paragraph 1.08, with the manufacturer's current price for each item. Include gaskets, seals, etc. on the list. List bearings by the bearing manufacturer's numbers only.
9. All submittal data required by the General Conditions.
10. Complete motor data.

B. In the event that it is impossible to conform to certain details of the Specifications due to different manufacturing techniques, describe completely all non-conforming aspects.

C. Upon receipt of approval of submitted material, provide the number of prints specified in the General Conditions. Provide electronic drawings in AutoCAD format upon request of the

ENGINEER.

1.07 OPERATING AND MAINTENANCE MANUALS

A. Operating and maintenance manuals shall be furnished. The manuals shall be prepared specifically for this installation and shall include all required cuts, drawings, equipment lists, descriptions, etc. that are required to instruct operating and maintenance personnel unfamiliar with such equipment. The number and special requirements shall be as specified in the Contract Documents.

B. A factory representative who has complete knowledge of proper operation and maintenance shall be provided for one day, to instruct representatives of the CITY and the ENGINEER on proper operation and maintenance. If there are difficulties in operation of the equipment due to the manufacturer's equipment or fabrication, additional service shall be provided at no cost to the CITY.

1.08 TOOLS AND SPARE PARTS

A. One set of all special tools required for normal operation and maintenance shall be provided. All such tools shall be furnished in a suitable steel tool chest complete with lock and duplicate keys.

B. The manufacturer shall furnish a complete set of recommended spare parts necessary for the first five years operation of the pumping system, which shall include at least the following for each pump supplied:

1. 1 set of upper bearings
2. 1 set of lower bearings
3. 1 set of upper and lower tandem shaft seals
4. 1 set of "O-Rings" or gaskets required for replacement of bearings and seals
5. 1 impeller wear ring or plate
6. 1 cable cap, if applicable

C. Spare parts shall be properly packaged and labeled for identification without opening the packaging and suitably protected for long term storage.

1.09 PRODUCT HANDLING

A. All parts shall be properly protected so that no damage or deterioration will occur during a prolonged delay from the time of shipment until installation is completed and the units and equipment are ready for operation.

B. All equipment and parts must be properly protected against any damage and weather during a prolonged period at the site.

C. Factory assembled parts and components shall not be dismantled for shipment unless permission is received in writing from the ENGINEER.

D. Finished surfaces of all exposed pump openings shall be protected by wood blanks, strongly built, and securely bolted thereto.

E. Finished iron or steel surfaces not painted shall be properly protected to prevent rust and corrosion.

F. After hydrostatic or other tests, all entrapped water shall be drained prior to shipment, and proper care shall be taken to protect parts from the entrance of water during shipment, storage, and handling.

G. Each box or package shall be properly marked to show its net weight in addition to its content.

PART 2 - PRODUCTS

2.01 MATERIALS AND EQUIPMENT

A. The pumping units required under this section shall be complete including pumps and motors with proper alignment and balancing of the individual units. All parts shall be so designed and proportioned as to have liberal strength, stability, and stiffness and to be especially adapted for the WORK to be done. Ample room shall be provided for inspection, repairs, and adjustments.

B. All necessary fasteners, chain, bolts, plates, nuts, and washers shall be AISI class 316 or greater Stainless Steel.

C. Stainless steel or brass nameplates giving the name of the manufacturer, the rated capacity, head, speed, and all other pertinent data shall be attached to each pump and motor. Nameplates shall include Underwriters Laboratories (UL) or Factory Mutual (FM) approval.

D. The nameplate ratings for the motors shall not be exceeded, nor the design service factor be reduced, when operating at any point on the characteristic curve.

2.02 PUMPS

A. Certification

1. The pump manufacturer must have a Quality Management System certified to ISO 9001.

B. General

1. Provide submersible non clog sewage pumps suitable for continuous duty submerged operation in liquids with a maximum temperature of 104°F without loss of watertight integrity. Pump system design shall include a guide rail system such that the pump will be automatically connected to the discharge piping when lowered into place on the discharge connection. The pump shall be easily removable for inspection or service requiring no bolts, nuts, or other fasteners to be disconnected, or the need for personnel to enter the wet well. The motor and pump shall be designed, manufactured, and assembled by the same manufacturer.

C. Pump and Motor shall conform to the following Specifications

Pump	
Pump Type	Centrifugal, Submersible, Non-clog
Pump Mounting	Stainless Steel Guide Rail(s)
Number of Pump	2
Pump Speed	1755 RPM
Pump Discharge Size	4 inch minimum
Minimum Solids Passage	3 inch diameter

	Operation Points		
	Min	**Design**	**Max**
Flow, GPM	0	693	1100
Pressure, ft. H_20	112	54.4	20

Motor	
HP (Non-overloading)	15
RPM	1755
Voltage	480V
Phase	3
Frequency	60 Hz
Refer to motor construction below	

D. Pump Construction

1. All major pump components shall be cast iron per ASTM A48 Grade 35. Castings shall have smooth surfaces devoid of blow holes and other casting irregularities. All fasteners shall be AISI class 316 stainless steel. All surfaces shall be primed with factory applied zinc phosphate primer and top-coated with either high solids two-part epoxy or polyester resin. The final top coat shall be 7 mils minimum thickness.
2. Impellers:
   The impeller shall be of non-clog (capable of passing a 3 inch diameter sphere), single-suction, semi-open (single-shrouded), radial flow design, incorporating one or two long sweeping vanes with wide flow channel(s) and be constructed of cast iron per ASTM A48 Grade 35. Vortex-type design is not acceptable. Alternative impeller designs may be submitted for consideration given the following conditions:
   a) The proposed alternative impeller design has been in-use for this application and horsepower for a minimum of five years.
   b) The manufacturer can provide a minimum of five references of utility operators for interview by the ENGINEER.
   c) The manufacturer provides an additive or deductive alternate price for the acceptance of the alternate impeller. Such alternate price must not be included in the bid but offered to the CITY after award.

   The impeller shall be dynamic balancing and be capable of handling solids, fibrous materials, heavy sludge, and all other matter normally expected in raw domestic sewage. All fasteners shall be AISI class 316 stainless steel. The pumps shall be furnished with a removable impeller wear ring or plate. The impeller shall be primed with factory applied zinc phosphate primer and top-coated with either high solids two-part epoxy or polyester resin.
3. Shaft Seals
   Two separate mechanical shaft seals shall be provided and arranged in an upper and lower configuration. Seals shall be UL or FM approved for explosion proof motors and may be a Crane Type 21, Sealol Type 42, or a proprietary design. All seals must be silicon carbide. All metal components shall be AISI Class 316 stainless steel. All elastomers shall be Viton or Nitrile (Buna-N).
   Seal systems shall be separated by an oil-filled reservoir. The reservoir shall have

separate oil fill and drain plugs to insure accuracy when measuring lubricant level and for ease of maintenance. The outer seal shall be protected from exposure to solids and foreign matter.

Seal shall require no special maintenance or routine adjustment; however, shall be easily inspected or replaced. No seal damage shall result from operating the pump for short periods of time without liquid.

E. Electric Motor Construction

1. Design

a) All motors shall confirm to the latest HI, NEMA, IEEE, ANSI, and NEC standards and shall have UL and CSA approval on the name plate. The motor shall be continuous duty with the following characteristics:

(1) Submersible motor integrity testing to 15 psi minimum for 5 min duration per HI 11.6.

(2) Housing Materials: ASTM A-48, Grade 35 or greater

(3) Motor Classification: NEMA Design B with torque and starting current in accordance with NEMA MG-1-12.2

(4) Minimum efficiency – In accordance with NEMA MG-1 Table 51.

(5) Service Factor: 1.15 minimum

(6) Explosion class: NFPA 70 (NEC) Class 1 Division 1 Group C or D

(7) Insulation Class: NEMA class F or H moisture resistant insulation

(8) Starting frequency: Minimum of 10 starts per hour

(9) Voltage tolerance: In accordance with NEMA MG-1-14.30

b) The motor shall be designed to continuously operate while in a wholly, partially, or non-submerged condition. If a cooling jacket is proposed to accomplish this, it shall be a non-clogging design.

c) The motor horsepower shall be adequate as to be non-overloading throughout the entire pump performance curve.

2. Rotor

Rotor shall be cast solid and dynamically balanced for vibration free operation. The pump and motor shaft shall be the same unit. The shaft shall be constructed from AISI class 420 or greater stainless steel. The shaft shall be machined for positive placement of bearings. The upper and lower bearing shall be of heavy duty design, capable supporting the shaft and rotor while under maximum radial and thrust loads. The bearings shall be permanently grease lubricated and sealed at the time of installation.

3. Entry Cable Seals

All static seals at water tight mating surfaces shall be of Nitrile O-ring type. Use of auxiliary sealing compounds shall not be required. The power and control cables shall enter the motor through a terminal housing and comply with standard Factory Mutual (FM) design requirements. The entrance shall be sealed with a rubber grommet and clamp set which when compressed longitudinally causes a radial water tight seal. The clamp set shall prevent all slippage and rotation of cables while engaged, yet may be easily removed and reused during routine maintenance.

4. Cables

The pump and electrical cables shall be capable of continuous submergence without the loss of waterproof integrity and comply with standard Factory Mutual (FM) design requirements. Cables shall be of adequate length to accommodate installation for this project.

5. Water Tightness Integrity
   Water-tight integrity of the motor housing and shaft seal shall be tested during manufacture by pressurizing the motor cavity and submerging in water with motor operating in accordance with ANSI/HI 11.6-2012.
6. Thermal Protection
   The motor shall be protected from thermal and moisture damage. Thermal protection shall consist of three separate thermostatic switches embedded into the stator windings. Each switch shall open independently and terminate motor operation if temperature of the protected winding reaches the high temperature set point of 125 degrees F. The thermal sensing devices shall annunciate in the pump control panel per the control specifications.
7. Moisture Protection
   Any moisture in the motor housing shall be detected by a mechanically activated moisture sensing micro-switch. The switch shall be sensitive enough to detect airborne moisture and terminate motor operation before liquid enters the cavity. Use of probes or floats that rely on the presence of liquids to initiate signal shall not be considered acceptable. The moisture sensing devices shall annunciate in the pump control panel per the control specifications.

F. Automatic Discharge Connection System

1. General
   Each pump shall be furnished with an automatic discharge connection system to permit removal and installation of the pump without the necessity of an operator entering the wetwell. The design must insure an automatic, water tight connection of the pump to the discharge piping when lowered into place. The discharge connection system shall consist of a guide rail assembly, a seating flange, a base elbow, and a hoisting system.
   Proper installation and alignment of the automatic discharge connection system shall be as directed by the pump manufacturer including all required dimensions and clearances. Any specific WORK necessary to install these components is to be included whether specifically shown in the contract documents or not. No portion of the pumps shall be supported directly on the bottom of the wetwell, guide rails, or lifting cable.
2. Guide Rail Assembly
   The guide rail assembly shall consist of one or two rails or pipes per pump as determined by the manufacturer and shall be sized in diameter and wall thickness appropriate for the specified pumping equipment or schedule 40, minimum. Support brackets shall be provided to fasten the guide rails to the wetwell wall at the frequency of one set of brackets per 20 linear feet of rails, minimum. The guide rail assembly shall be supplied with an upper support bracket and shall be mounted to the base elbow at the bottom. The guide rail(s), all support brackets, fasteners, and appurtenances shall be AISI class 316 stainless steel.
3. Seating Flange
   The seating flange (slide bracket or guide shoe) is to be provided as part of the discharge flange of the pump. The seating flange shall direct the pump down the vertical guide rails and onto the discharge connection in a simple linear movement. The seating flange shall be designed with integral hooks at the top to transmit full weight of the pump to the discharge base elbow creating a tight seal. When lowered into place, no rotary motion of the pump shall be required for sealing with the base elbow.

4. Base Elbow
A base elbow shall be provided for each pump designed to mate with the pump discharge as stated above and provide a 90 degree bend to an ANSI class 125 flange consistent with the pump size and discharge diameter. The base elbow diameter shall match the pump flange diameter with no reducers necessary.
The base elbow shall be cast iron per ASTM A48 Grade 35. Castings shall have smooth surfaces devoid of blow holes and other casting irregularities. All fasteners shall be AISI class 316 stainless steel. All surfaces shall be primed with factory applied zinc phosphate primer and top-coated with either high solids two-part epoxy or polyester resin. The final top coat shall be 7 mils minimum thickness. Floor fasteners shall be 3/4" minimum diameter.
5. Hoisting System
The pumps shall be supplied with a lifting bail, for proper balance of pump and release from the discharge connection while using a single lift cable. Stainless steel chain (2 feet) plus lifting braided wire lift cable shall be provided for each pump. The chain, braided wire, and fasteners shall be sized by the manufacturer for the total weight of the pump and motor plus a minimum safety factor of two (2.0). A crimped ball end shall be provided at the upper end of this cable for attaching to the wet well access frame. All chain, cable, and fasteners shall be AISI Class 316 stainless steel.
6. Unit Responsibility
To assure unity of responsibility, the Automatic Discharge Connection System shall be considered appurtenant to the pump installation and shall be furnished by the pump manufacturer and coordinated by the local pump manufacturer's representative. The CONTRACTOR and pump manufacturer shall assume responsibility for the satisfactory installation and operation of the entire pumping system.

2.03 ACCESS FRAMES AND GUIDES

A. The pumping station shall be furnished with the necessary aluminum access frames, complete with hinged and hasp-equipped covers, stainless steel upper guide holder, and level sensor cable holder. The frames shall be securely mounted above the pumps. Access doors shall have safety locking handle in the open position. Doors shall be of aluminum checkered plate with stainless steel hardware as manufactured by the Bilco Company, Babcock-Davis, Halliday, U.S. Fabrication or U.S. Foundry Co. No substitution is permitted.

2.04 PUMP CONTROL SYSTEM

Refer to Division 16 and the Contract Drawings.

PART 3 - EXECUTION

3.01 INSTALLATION

A. Installation shall be in strict accordance with the manufacturer's instructions and recommendations in the locations shown on the DRAWINGS. Installation shall include furnishing the required oil and grease for initial operation. The grades of oil and grease shall be in accordance with the manufacturer's recommendations. Anchor bolts shall be set in accordance with the manufacturer's recommendations.

B. The CONTRACTOR shall submit a certificate from the equipment manufacturer stating that the installation of the equipment is satisfactory, that the equipment is ready for operation, and that the operating personnel have been suitably instructed in the operation, lubrication

and care of each unit.

3.02 SHOP PAINTING

A. Before exposure to weather and prior to shop painting, all surfaces shall be thoroughly cleaned, dried, and free from all mill-scale, rust, grease, dirt, and other foreign matter.

B. All pumps and motors shall be shop coated. All surfaces shall be primed with factory applied zinc phosphate primer and top-coated with either high solids two- part epoxy or polyester resin. The final top coat shall be 8 mils minimum thickness. Alternative coating systems may be submitted for ENGINEER's consideration.

C. All nameplates shall be properly protected during painting.

D. Gears, bearing surfaces, and other similar surfaces obviously not to be painted shall be given a heavy shop coat of grease or other suitable rust-resistant coating. This coating shall be maintained as necessary to prevent corrosion during periods of storage and erection and shall be satisfactory to the ENGINEER up to the time of the final acceptance test.

3.03 INSPECTION AND TESTING

A. General Description

1. The ENGINEER shall have the right to inspect, test, or witness tests of all materials or equipment to be furnished under these specifications, prior to their shipment from the point of manufacture.
2. The ENGINEER shall be notified in writing prior to initial shipment, in ample time so that arrangements can be made for inspection by the ENGINEER.
3. The ENGINEER or his representative shall be furnished all facilities, including labor, and shall be allowed proper time inspection and testing of material and equipment.
4. Materials and equipment shall be tested or inspected as required by the ENGINEER, and the cost of such WORK shall be included in the cost of the equipment. The CONTRACTOR shall anticipate that delays may be caused because of the necessity of inspection, testing and accepting materials and equipment before their use is approved.
5. The services of a factory representative shall be furnished for one day, for each station, and shall have complete knowledge of proper operation and maintenance to inspect the final installation and supervise the test run of the equipment. With the permission of the CITY, these services may be combined with those provided under paragraph 1.07, OPERATING AND MAINTENANCE MANUALS.
6. Field tests shall not be conducted until such time that the entire installation is complete and ready for testing.

B. Pumps Inspection

1. After all pumps have been completely installed, and working under the direction of the manufacturer, conduct in the presence of the ENGINEER such tests as are necessary to indicate that pumps conform to the Specifications. Field tests shall include all pumps included under this Section. Supply all electrical power, water or wastewater, labor, equipment and incidentals required to complete the field tests.
2. If the pump performance does not meet the Specifications, corrective measures shall be taken or pumps shall be removed and replaced with pumps that satisfy the conditions specified. A 24-hour operating period of the pumps will be required before acceptance. During this 24-hour operating period, the CONTRACTOR shall supply all power necessary.

C. Motor Inspection

1. The CONTRACTOR shall check all motors for correct clearance and alignment and for correct lubrication in accordance with manufacturer's instructions. The CONTRACTOR shall check direction of rotation of all motors and reverse connections if necessary.

END OF SECTION

SECTION 11400 TEMPORARY BY-PASS PUMPING

PART 1 - GENERAL

1.01 THE REQUIREMENT

A. The CONTRACTOR shall design and furnish all tools, supplies, materials, labor, equipment, power, maintenance, necessary for the installation, testing and placing into operation of a temporary pumping system for the purpose of diverting the existing flow around the work area for the duration of the project.

B. The design, installation and operation of the temporary pumping system shall be the CONTRACTOR's responsibility. The CONTRACTOR shall employ the services of a vendor who can demonstrate to the CONSULTANT that it specializes in the design and operation of temporary bypass pumping systems. The vendor shall provide at least three (3) references of projects of a similar size and complexity as this project performed by the vendor's firm within the past ten years.

C. The bypass system shall meet the requirements of all codes and regulatory agencies having jurisdiction.

1.02 DEFINITIONS

A. "Interruption of pumping operations" is defined as any activity that will result in a change in the current method of operation. CONTRACTOR shall request such "interruption of pumping operations" from the COUNTY no less than ninety-six (96) hours in advance. COUNTY may defer the request as allowed by Article 2.01 A. 4 of this Section.

B. "Partial Utilization", "Substantial Completion", and "Warranty Period for Items in Continuous Service": Refer to the "Contract Documents" for definition.

C. The terms "open, close, start, stop, operate, verify, energize, de-energize, transfer, switch-over, etc" when used in conjunction with equipment that is in-service or about to be placed in-service are understood to mean: The COUNTY's operation or maintenance staff shall perform the operation upon written request from the CONTRACTOR.

D. The term "operational test" refers to the period of specified duration that the installed system is tested to verify operational integrity of a system prior to placing the system in-service. Operational testing requires that representatives of the equipment manufacturers be on-site for timely identification and resolution of system issues.

E. "Low Flow Period" refers to the time of day when the pump station flow rate reaches the diurnal minimum. It occurs between the hours of 3 AM and 8 AM.

1.03 SUBMITTALS

A. Bypass Pumping Plan: The CONTRACTOR shall submit to the CONSULTANT detailed DRAWINGS and descriptions outlining all provisions and precautions to be taken by the CONTRACTOR regarding the handling of existing wastewater flows. The plan shall be specific and complete, including such items as schedules, locations, elevations, capacities of equipment, materials and all other incidental items necessary and/or required to ensure proper protection of the facilities, including protection of the access and bypass pumping locations. Contractor designed bypass plans will be signed and sealed by a Professional Engineer registered in the State of Florida. No construction shall begin until all provisions and requirements have been reviewed and approved by the CONSULTANT. The signed and sealed plan shall include, but is not limited to, the following details:

1. Detailed DRAWINGS showing all required equipment and staging areas for pumps;
2. Plugging methods and types of plugs;
3. Number, size, material, location, general configuration and method of installation of suction piping;
4. Number, size, material, method of installation, general configuration, and location of installationof discharge piping;
5. Bypass pump sizes, capacity, number of each size to be on site and power requirements;
6. Pump curves showing pump operating range are to be submitted;
7. Standby power generator size, location, (if applicable);
8. Thrust and restraint block sizes and locations (if applicable);
9. Sections showing suction and discharge pipe depth, embedment, select fill and special backfill;
10. Method of noise control for each pump and/or generator;
11. Any temporary pipe supports and anchoring required;
12. Design for access to bypass pumping locations indicated on the DRAWINGS;
13. Calculations for selection of bypass pumping pipe size;
14. Schedule for installation of and maintenance of bypass pumping lines;
15. Automatic Level Control and Pump Control System
16. Emergency Response Plan;
17. Hydraulic Calculations and System Curves including, but not limited to:
18. Calculations of static lift, friction losses and flow velocity
19. De-ragging plan

B. CONTRACTOR's Sequence of Construction defining WORK to be performed, including the following items:

1. Definition of the start date, duration and end date for each of the segments of the WORK.
2. For each segment of WORK, define activities to be performed by or witnessed by the COUNTY and date on which these activities are to be performed.
3. Scheduling/timing of manufacturers field services, as specified.
4. Interruption of the operation of the existing pumping station is required to perform this WORK. Define the purpose for the interruption; date and time of interruption; and duration of interruption.
5. Provide complete list of equipment and material that is required to perform each segment of WORK.

PART 2 -- PRODUCTS

2.01 PUMPING EQUIPMENT

A. General:

1. This wastewater collection system is part of a regional system that must be kept in service at all times. It is essential to the operation of the existing wastewater system that there be no interruption in the conveyance of wastewater to the wastewater treatment plant throughout the duration of the project. To this end, the CONTRACTOR shall provide, maintain and operate all temporary facilities such as dams, plugs, pumping equipment (both primary and back-up units as required), conduits, all necessary power, and all other labor and equipment necessary to intercept the wastewater flow before it reaches the point where it would interfere

with the WORK, carry it past the WORK and return it to the existing system downstream of the WORK.

2. It is the CONTRACTOR's responsibility to provide equipment that is adequate for the performance of the WORK under this Contract within the time specified. All equipment shall be kept in satisfactory operating condition, shall be capable of safely and efficiently performing the required WORK, and shall be subject to review by the COUNTY's representative at any time within the duration of the Contract. All WORK hereunder shall conform to the applicable requirements of the OSHA Standards for Construction.
3. Should the CONTRACTOR fail to maintain the continuous operation of the bypass pumping system, the COUNTY shall repair/operate the bypass pumping system to maintain station operation. The COUNTY shall look to recover the costs for labor and materials incurred during operation/repair of the temporary bypass system from monies owed the CONTRACTOR for other portions of the WORK.
4. Customer service and continuous wastewater collection system operations take precedence over CONTRACTOR activities. Therefore, interruption of system operations shall be coordinated and are subject to the operational requirements of the COUNTY. CONTRACTOR shall assume that any interruption of the system operations may be deferred by up to one week from the requested time due to customer service and operational constraints.
5. The CONTRACTOR shall provide for utilities and services for its own operations. The CONTRACTOR shall furnish, install and maintain all temporary utilities during the contract period including removal upon completion of the WORK.
6. All pumps used shall be constructed to allow dry running for long periods of time to accommodate the cyclical nature of the flows.
7. All pumps used shall be end suction centrifugal pumps with heavy-duty cast-iron construction, with the ability to dry-prime and re-prime automatically. All pumps will be sewage handling units with the Thompson Pump's Enviroprime® system or an engineer approved equivalent. Any submitted equivalent priming system must demonstrate the ability to prevent wastewater from being discharged into the surrounding environment. Any submitted equivalent requiring the use of additional hoses/piping to recirculate wastewater back to the suction point will not be considered. The pumps shall not be hydraulic or electric submersible type. All pumps shall be Thompson Pump or equivalent approved by CONSULTANT.
8. Furnish each pump with the necessary stop/start controls.
9. CONTRACTOR shall not be permitted to stop or impede the main flows under any circumstances except as otherwise defined under the sequence of construction.
10. CONTRACTOR shall maintain sewer flow around the WORK area in a manner that will minimize surcharging of sewers as much as possible to protect water resources, wetlands, public and private property from damage and flooding.

B. Temporary Bypass Pumping Requirements: The CONTRACTOR shall be responsible for the construction of the bypass facilities as described herein and indicated on the DRAWINGS. Requirements for the bypass pumping system is as follows:

1. Bypass pumping system shall be operated 24 hours per day while the existing system is being replaced.

C. Operating personnel shall be experienced in operation and maintenance of the equipment and shall be supervised by the Vendor. The CONTRACTOR shall provide dialers and temporary flow level alarms for the complete duration of the project. The CONTRACTOR

shall ensure appropriate equipment and materials are available onsite so the bypass system can be maintained despite mechanical failures.

D. The bypass pumps shall be quiet models producing no more than 70 dBA at a distance of 23 feet.

E. Provide all pipeline plugs, pumps of adequate size to handle peak flow, and temporary discharge piping to ensure that the total flow of the pump station can be safely diverted around the pump station while the station is modified.

F. The CONTRACTOR shall make all arrangements for bypass pumping during the time when the lift station is shut down for any reason. The bypass system must overcome any existing force main pressure on discharge.

G. Discharge Piping - Constructed of rigid pipe such as steel or, ductile iron, with positive restrained joints or fused high density or polyethylene pipe. Under no circumstances will aluminum "irrigation" type piping or glued PVC pipe be allowed. Discharge hose will only be allowed in short sections and by specific permission from the CONSULTANT.

H. Operation: The bypass pumps shall have variable capacity either by way of a VFD if electric units are used or by controlling the speed of the diesel engine if diesel- powered pumping units are used. Each pump shall have a separate control panel.

I. Provide pressure and vacuum gauges on the suction and discharge headers.

J. Provide floats or transducers to start and stop the pumps as shown on the DRAWINGS.

K. Characteristics of Bypassed Fluid: raw unscreened sewage. Pumps must be able to handle up to 3 inches solids.

L. The CONTRACTOR is responsible for providing a temporary telemetry system to notify any/all specified parties in the event of a specified system change. This system will communicate to any/all contacts via wireless phone calls

M. Control Sequence:

1. As the water level in the suction well increases, start the lead pump at the set point shown.
2. If the suction well level continues to rise, start the lag pump when the set point is reached.
3. If the suction well levels fall below the stated set point, stop the lag pump.
4. If the suction well levels fall to the set point, stop the lead pump.

PART 3 - EXECUTION

3.01 PREPARATION

A. The CONTRACTOR shall be responsible for locating any existing utilities in the area where the CONTRACTOR selects to locate the bypass pumps and pipelines. The CONTRACTOR shall locate the bypass pipelines to minimize any disturbance to existing utilities and shall obtain approval of the pipeline locations from the COUNTY and the ENGINEER. All costs associated with relocating utilities and obtaining all approvals shall be paid by the CONTRACTOR.

B. During bypass pumping operations, the CONTRACTOR shall protect the pumping station and force main from damage inflicted by the CONTRACTOR's equipment. The CONTRACTOR shall be responsible for all physical damage to the pumping station caused by human or mechanical failure.

3.02 INSTALLATION AND REMOVAL

A. The CONTRACTOR shall pipe sections or make connections to the existing force main and construct temporary bypass pumping structures only at the access location indicated on the DRAWINGS and as may be required to provide an adequate suction conduit.

B. Plugging or blocking of wastewater flows shall incorporate primary and secondary plugging devices. When plugging or blocking is no longer needed for performance of the WORK, the plugs shall be removed in a manner that permits the wastewater flow to slowly return to normal without surge, surcharging, or causing other major disturbances downstream.

C. The installation of the bypass pipelines is prohibited in all saltmarsh/wetland areas. The pipeline must be located off streets and sidewalks and on shoulders of the roads. When the bypass pipeline crosses local streets and private driveways, the CONTRACTOR must place the bypass pipelines in trenches and cover with temporary pavement. Upon completion of the bypass pumping operations, and after the receipt of written permission from the CONSULTANT, the CONTRACTOR shall remove all the piping, restore all property to pre-construction condition and restore all pavement. The CONTRACTOR shall be responsible for obtaining any approvals for placement of the temporary pipeline within public ways from the COUNTY.

D. At the conclusion of the Bypass Pumping operation, when all of the modifications to the station are complete, tested, and ready for operation, demonstrate the new system in automatic mode for 72 hours. At the completion of the demonstration period, remove all temporary bypass facilities and restore the site to original conditions.

3.03 QUALITY CONTROL AND MAINTENANCE

A. Testing: CONTRACTOR shall perform leakage and pressure tests of the bypass pumping discharge piping using clean water prior to actual operation. The CONSULTANT shall be given 24 hours' notice prior to testing.

B. Inspection: CONTRACTOR shall inspect the bypass pumping system every twelve (12) hours to ensure that the system is working correctly.

C. Maintenance Service: CONTRACTOR shall ensure that the temporary pumping system is properly maintained and a responsible operator shall be on hand at all times when pumps are operating.

D. Extra Materials: Spare parts for pumps and piping shall be kept on site as required. Adequate hoisting equipment for each pump and accessories shall be maintained on the site.

END OF SECTION

SECTION 16000 ELECTRICAL GENERAL REQUIREMENTS

PART 1 - GENERAL

1.01 SCOPE

A. Provide all labor, materials, tools, supplies, equipment, and temporary utilities to complete the WORK shown on the DRAWINGS and specified herein for the pumping station. All systems are to be completely installed and fully operational. Specifically, the WORK includes, but is not limited to:

1. Electric services, secondary feeders, branch circuits, all connections to controls, and equipment
2. Installation of underground conduits and splices
3. Complete power and control systems
4. Complete grounding system including system and equipment

1.02 RELATED DOCUMENTS

A. The general provisions of the Contract, including General Conditions and Special Conditions, apply to all the WORK specified herein.

1.03 LAWS, PERMITS, FEES AND NOTICES

A. Secure and pay all permits, fees, and licenses necessary for the proper execution and completion of the WORK. Submit all notices and comply with all laws, ordinances, rules and regulations of any public agency bearing on the WORK. CONTRACTOR shall be a licensed electrical contractor in the county of construction.

1.04 DEPARTURES

A. If any departures from the Contract Drawings of Specifications are deemed necessary, details of such departures and the reasons therefore shall be submitted as soon as practicable to the ENGINEER for advance written approval.

1.05 BASIS FOR WIRING DESIGNS

A. The Contract Drawings and Specifications describe specific sizes of switches, breakers, fuses, conduits, conductors, motor controllers and other items of wiring equipment. These sizes are based on specific items of power consuming equipment (heaters, lights, motors for fans, compressors, pumps, etc.). Wherever another trade provides power consuming equipment that differs from the DRAWINGS and Specifications, the wiring for such equipment shall be changed to proper sizes to match at no additional expense to the CITY.

1.06 AS-BUILT INFORMATION

A. A set of "red-lined" electrical drawings shall be carefully maintained at the job site. Actual conditions are to be put on the DRAWINGS in red on a daily basis, so the DRAWINGS will continuously show locations and routings of cables, conduits, pull boxes, circuit numbers and other information required by the ENGINEER.

1.07 EXCAVATING FOR ELECTRICAL WORK

A. General – Excavation or drilling, backfill and repair of paving and grassing shall be in the bid of the electrical contractor. The actual WORK need not be performed by electrical trades. However, the electrical contractor is responsible for all excavation, drilling, dewatering, backfilling, tamping, and repair of pavements and grassing required in support of electrical

work. All areas disturbed by electrical work shall be repaired to their original condition, or as indicated on the DRAWINGS.

B. Coordination

1. The electrical contractor must check for existing utilities before commencing any excavation or drilling.
2. Contract drawings and other trades are to be consulted to avoid interferences with other utilities on this project.
3. In the event of damage to existing utilities, the CITY and ENGINEER shall be immediately notified, and damage shall be immediately repaired.

C. Precautions – The electrical contractor must take every reasonable precaution to avoid interferences. In the vicinity of a suspected interference, excavations shall be dug by hand.

1.08 JOB SITE VISIT

A. Visit the project site before submitting a bid. Verify all dimensions shown on the Contract Drawings and determine the characteristics of existing facilities which will affect performance of the WORK, but which are not shown on the DRAWINGS or described within these Specifications.

1.09 CODES AND STANDARDS

A. Applicable provisions of the following codes and standards, and other codes and standards required by the State of Florida and local jurisdictions, are hereby imposed on a general basis for electrical work (in addition to specific applications specified by individual work sections of these specifications).

1. U.L. – Electrical materials shall be approved by the Underwriters' Laboratories, Inc. This applies to materials which are covered by U.L. standards.
2. NEC – National Electrical Code (NFPA-70-2014)
3. OSHA – Standards of the Occupational Safety and Health Administration are to be complied with.
4. NEMA – National Electrical Manufacturers Association Standards are to be met wherever standards have been established by that agency, and proof is specifically required with material submittals for switchboards, motor control centers, panelboards, cable trays, motors, switches, circuit breakers, and fuses.
5. ANSI – American National Standards Institute
6. Florida Building Code

1.10 ELECTRICAL SUBMITTALS

A. The CONTRACTOR shall submit shop drawings, samples and certificates in accordance with the Special Conditions for additional instructions on substitutions. Submittals will not be accepted for partial systems. Submit all materials for each specifications section at one time. Submittals must be arranged, correlated, indexed and bound in orderly sets for ease of review.

B. Shop drawings and manufacturer’s data sheets are required for all electrical materials. Samples are to be supplied for any substitute as requested by the ENGINEER.

C. Submit Shop Drawings, manufacturer's data, and certifications on all items of electrical work prior to the time such equipment and materials are to be ordered. Order no equipment or materials without approval from the ENGINEER.

1.11 OPERATION AND MAINTENANCE MANUALS

A. The CONTRACTOR shall submit Operation and Maintenance (O&M) Manuals in accordance with Division 1, General Requirements. O&M Manuals must contain, but are not limited to, the following:

1. Brief description of system and basic features
2. Manufacturer's name and model numbers of all components of the system
3. List of local factory authorized service companies
4. Operating instructions, including preparation for starting up, seasonal changes, shut down and service
5. Maintenance instruction
6. Possible breakdowns and repairs
7. Manufacturer's literature describing each piece of equipment
8. Control diagrams by the control manufacturer
9. Description of sequence by the control manufacturer
10. Parts list
11. Wiring diagrams

1.12 SPARE PARTS

A. Submit in accordance with Division 1, General Requirements, a list of Recommended Spare Parts for all major items of equipment. Include descriptions of each part, part number, and cost.

1.13 PROJECT DOCUMENTS

A. For "As Built" drawing requirements, see Division 1.

B. In addition, each "As Built" single line diagram shall be framed under glass and mounted on wall near respective contactors and controls.

PART 2 - PRODUCTS

2.01 GENERAL

A. Electrical Temporary Facilities – The CONTRACTOR shall include in his bid the cost of furnishing, installing and maintaining all materials and equipment required to provide temporary light and power to perform the WORK of all trades during construction and until WORK is completed. Adequate lighting and receptacle outlets for operation of hand tools shall be provided throughout the project, including shanties, trailers, field offices, temporary toilet enclosures, and shall be extended as construction progresses.

B. All reasonable safety requirements shall be observed to protect workers and the public from shock and fire hazards.
1. Ground fault interrupters shall be employed in accordance with Codes.
2. Ground wires are required in all circuits. Ground poles are required on all outlets. All metallic cases shall be grounded.
3. Rain-tight cabinets shall be used for all equipment employed in wet areas.

2.02 ELECTRICAL PRODUCTS

A. Unless otherwise indicated in writing by the ENGINEER, the products to be furnished under this specification shall be the manufacturer's latest design. Where two or more units of the same class of equipment are required, these units shall be products of the same purpose and rating shall be interchangeable throughout the project.

B. All products shall be newly manufactured. Defective equipment or equipment damaged in the course of the installation or a test shall be replaced or repaired in a manner meeting the approval of the ENGINEER, at no additional expense to the CITY.

2.03 SUBSTITUTIONS

A. Comply with instruction in the Contract General Conditions and Special Conditions regarding substitutions.

2.04 ELECTRICAL IDENTIFICATION

A. Color Coding – Conductor colors shall be in accordance with NEC and NEMA requirements. Refer also to applicable sections of these specifications. Three-phase feeder and branch circuits shall be identified as follows:

120 /240	**277 / 480**
A – Black	A – Brown
B – Red	B – Purple
C – Blue	C – Yellow
N – White	N - Gray

Green or bare for grounding conductors

Green with Yellow trace for Special Grounding

2.05 NAMEPLATE

A. The following items shall be equipped with nameplates – All motors, motor starters, motor control centers, pushbutton stations, control panels, time switches, disconnect or relays in separate enclosures, transformers, receptacles, wall switches, high voltage boxes, and cabinets. All light switches and outlets shall carry a phenolic plate with the supply circuit number. Electrical systems shall be identified at junction and pull boxes, terminal cabinets and equipment racks.

B. Nameplates shall adequately describe the function of the particular equipment involved. Nameplates for panelboards and switchboards shall include the panel designation, voltage and phase of the supply. For example, "Panel A, 277 / 480 V, 3- phase, 4-wire." The name of the machine on the motor nameplates for a particular machine shall be the same as the one used on all motor starters, disconnect and P.B. station nameplates for that machine. Nameplates shall be laminated phenolic plastic, white front and back with black core, with lettering etched through the outer covering; black engraved letters on white background. Lettering shall be 3/16 inch high at pushbutton stations, thermal overload switches, receptacles, wall switches and similar devices, where the nameplate is attached to the device plate. At all other locations, lettering shall be 1/4 inch high, unless otherwise detailed on the DRAWINGS. Nameplates shall be securely fastened to the equipment with No. 4 Phillips, rough-head, cadmium-plated, steel self-tapping screws or nickel-plated brass bolts. Motor nameplates may be nonferrous metal not less than 0.03 inch thick, die stamped. In lieu of separate plastic nameplates, engraving directly on device plates is acceptable. Engraved lettering shall be filled with contrasting enamel. Equipment nameplate schedule for all equipment shall be submitted with shop drawing submittal for ENGINEER's approval.

C. All junction and splice boxes shall be labeled using permanent shipping tags attached to boxes, not covers.

2.06 WIRE AND CABLE IDENTIFICATION

A. All wire and cable shall be identified at each termination point and at each pull box, splice box, junction box, or manhole. Provide permanent, waterproof, non-metallic (paper unacceptable) tags indicating the circuit number in 3/16 inch letters. Circuit numbers shall be protected with clear shrinkable tubing.

PART 3 - EXECUTION

3.01 DELIVERY, STORAGE AND HANDLING

A. Deliver products to project properly identified with names, model numbers, types, grades, compliance labels and similar information needed for distinct identification; adequately packaged or protected to prevent deterioration during shipment, storage and handling. Store in a dry, well ventilated, indoor space, except where prepared and protected by the manufacturer specifically for exterior storage. Comply with CITY's instruction for storage locations.

3.02 ELECTRICAL COORDINATION

A. The CONTRACTOR is responsible for coordination with the CITY, ENGINEER, the power company, and the telephone company on all matters that have a bearing on the electrical work.

B. The DRAWINGS indicate the extent, the general location, and arrangement of equipment, conduit, and wiring. Study the DRAWINGS, including details, so the equipment shall be properly located and readily accessible. Locate all electrical equipment to avoid interference with mechanical and / or structural features. Make necessary changes in spacings and locations of lighting fixtures, panelboards, cabinets, receptacles and other items of equipment provided that the overall patterns of layouts are not disrupted and remain uniform.

3.03 CUTTING AND PATCHING

A. Cut and prepare all openings, chases, and trenches required for the installation of equipment and materials. Repair, remodel, and refinish in strict conformance with the quality of workmanship and materials in the surroundings. Obtain written permission from the ENGINEER for any alterations to structural members before proceeding. All penetrations through fire walls or floor / ceiling slabs shall be sealed to maintain the fire integrity of the wall or slab.

3.04 MAINTENANCE

A. Render all necessary measures to insure complete protection and maintenance of all systems, materials, and equipment prior to final acceptance. Any materials or equipment not properly maintained or protected to assure a “factory new” condition at the time of final acceptance shall be replaced immediately at no additional cost to the CITY.

3.05 WATERPROOFING

A. Whenever any WORK penetrates any waterproof area, seal and render the WORK waterproof. All WORK shall be accomplished so as not to void or diminish any waterproofing bond or guarantee.

3.06 TESTS

A. Conduct an operating test of equipment prior to the ENGINEER's approval. The equipment shall be demonstrated to operate in accordance with the requirements of these Specifications. The tests shall be performed in the presence of the ENGINEER or an authorized representative. The CONTRACTOR shall furnish all instruments, electricity and personnel required for the tests.

3.07 CLEANUP

A. Maintain continuous cleanup during the progress of the WORK, and use appointed storage areas for supplies. The premises shall be kept free from accumulations of waste materials and rubbish.

END OF SECTION

SECTION 16011 CODES & STANDARDS

PART 1 - GENERAL

1.01 This section covers the codes, specifications and standards considered minimum requirements for materials, workmanship and safety for all Divisions 16 and related electrical work.

1.02 SPECIFICATIONS, CODES AND STANDARDS

A. Reference within this Section to standards, codes or reference specifications implies that any item, product or material so identified must comply with all minimum requirements as stated therein, except packaging and shipping, unless indicated otherwise. Only the latest revised editions are applicable.

Some of the references used in this Division are as follows:

NFPA	National Fire Protective Association
NEC	National Electrical Code
NEMA	National Electrical Manufacturers' Association
U.L.	Underwriters' Laboratories, Inc.
ANSI	American National Standards Institute
FS	Federal Specification

B. The Specifications, codes and standards indicated below and in other Sections, including the current addenda, amendments and errata, referred to by basic designation only, form a part of this specification.

NFPA-70	National Electrical Code (Current Edition)
NFPA-90A	Air Conditioning & Ventilation (Current Edition)
NFPA-101	Code for Safety to Life (Current Edition)
F.B.C.	Florida Building Code (Current Edition)

1.03 UNDERWRITERS' LABORATORIES

A. Where materials and equipment are available under the continuing inspection and labeling service of U.L.; provide such material and equipment.

B. Listing by Underwriters' Laboratories shall be evidenced by the label or:

U.L. - Electrical Construction Materials List (Green Book)
U.L. - Electrical Appliance & Utilization Equipment List
U.L. - Building Materials List

PART 2 - PRODUCTS (NOT USED)

PART 3 - EXECUTION (NOT USED)

END OF SECTION

SECTION 16050 BASIC ELECTRICAL MATERIALS AND METHODS

PART 1 - GENERAL

1.01 SCOPE

A. Provide all material as required for a complete project as required by the DRAWINGS and in this Specification.

1.02 SHOP DRAWING SUBMITTALS

A. Submit shop drawings for the following:
Electrical Control Panel
All raceways
Circuits, Connectors, Switches, Wiring and Splices
Contactors, Relays, Photocells

PART 2 - PRODUCTS

2.01 RACEWAY

A. Galvanized Rigid Conduit (ANSI C80.0) – Rigid galvanized steel conduit "RGS" shall be U.L. Approved, Schedule 40, mild steel pipe, zinc-coated on the inside and outside. Fittings shall be zinc-coated, U.L. Approved.

B. PVC Conduit – Underground PVC conduit shall be Schedule 40 or Schedule 80 unless otherwise noted, and shall be U.L. approved. PVC conduit shall be Schedule 80 when installed above ground.

C. Locations: – Conduit shall be used as follows:
1. All above ground grade exposed conduits shall be hot dipped galvanized rigid steel except otherwise noted on the DRAWINGS.
2. All conduits penetrating rated fire walls or rated fire floors shall be installed with U.L. Approved devices to maintain the fire rating of the wall or floor penetrated.

2.02 WIRE AND CONNECTORS

A. Cable shall be rated for 600 volts and shall meet the requirements below:
1. Conductors shall be stranded.
2. All wire shall be brought to the job in unbroken packages and shall bear the date of manufacturing; not older than 12 months.
3. Type of wire shall be THWN or THHN rated 75 degrees C, suitable for wet locations except where otherwise required by the DRAWINGS.
4. No wire smaller than No. 12 AWG shall be used unless specifically indicated.
5. Conductor metal shall be copper.
6. All conductors shall be meggered after installation and insulation must be in compliance with the Insulated Power Cable Engineers Association Minimum Values of Insulation Resistance.

2.03 BOXES

A. Boxes for wiring devices (switches and receptacles) installed outdoors or wet locations shall be weatherproof fiberglass with polycarbonate cover plates. Junction boxes shall be NEMA 4X construction. All boxes shall be securely mounted, plumb and level, in readily accessible locations.

B. Pull boxes in ground shall be Pencell HHPL 172012 with green lid marked “ELECTRIC”.

2.04 GROUNDING

A. Grounding and Bonding – All Grounding and Bonding shall be in accordance with NFPA 70. Ground all exposed non-current-carrying metallic parts of electrical equipment, metallic raceway systems, grounding conductor in raceways, and neutral conductor of wiring systems.

B. Grounding Conductor – Provide an insulated, green-colored equipment grounding conductor in all feeder and branch circuits. This conductor shall be separate from the electrical system neutral conductor. Conduits will not be approved as grounding conductor.

C. The CONTRACTOR shall install all ground rods, ground wires, and connectors as required for the complete grounding system.

D. All metal parts and grounding conductors in each manhole or pullbox shall be grounded to a local ground rod.

E. Resistance – Readings shall not be taken within 48 hours of a rainfall.

F. The CONTRACTOR shall provide a written report for all grounding test results to the ENGINEER. The test shall include all ground connections. The report shall be signed by the CITY of the contracting firm and shall include: test date, time, weather conditions on test date, weather conditions 3 days prior to the test date, location, and results.

G. All raceways require grounding conductors; metallic raceways are not adequate grounding paths. Bonding conductors through the raceway systems shall be continuous from main switch ground buses to panel ground bars of panelboards, and from panel grounding bars of panelboards, and motor control centers to branch circuit outlets, motors, lights, etc. These ground conductors are required throughout the project regardless of whether conduit runs or the Cable and Conduit Schedule show ground conductors on the DRAWINGS.

H. All connections made below grade shall be of the exothermic type.

PART 3 - EXECUTION

3.01 CONDUIT INSTALLATION

A. General

1. Nylon pull cords shall be installed in all empty conduits. Wire shall not be installed until all WORK of any nature that may cause damage is completed, including pouring of concrete. Mechanical means shall not be used in pulling in wires 8 AWG or smaller.
2. The use of running threads is prohibited and where some such device is necessary, split couplings, Erickson couplings, or equal shall be used. Where water-tight conduit installations are required, water-tight conduit unions shall be used.
3. All conduits shall be cleaned by pulling a brush swab through before installing cables.
4. All conduits shall be sealed at each end with electrical putty or Duct Seal. Special care shall be taken at all equipment where entrance of moisture could be detrimental to equipment.

B. Handling

1. Conduits subjected to rough handling or usage shall be removed from the premises.

2. Conduits must be kept dry and free of water or debris with approved pipe plugs or caps. Care shall be given that plugs or caps are installed before pouring of concrete. All spare conduits shall remain plugged or capped upon project completion.

C. Concrete and Masonry

1. Where conduits pass through exterior concrete walls or fittings below grade, the entrances shall be made watertight. This shall be done by providing pipe sleeves in the concrete with 1/2" minimum clearance around the conduits, and caulking with askum and sealant, or by means of conduit entrance seals.
2. Where embedded conduits cross expansion joints, furnish and install offset expansion joints or sliding expansion joints. Sliding expansion joints shall be made with straps and clamps.

D. Panelboards and Boxes

1. Conduits entering panelboards, pull boxes, or outlet boxes shall be secured in place by galvanized locknuts and bushings, one locknut outside and one locknut inside of box with bushing on conduit end. The locknuts shall be tightened against the box without deforming the box. Bushings shall be of the insulating type.

E. Bending

1. Field conduit bends shall be made with standard tools and equipment manufactured especially for conduit bending.

F. Mounting and Concealing

1. Conduit runs shall always be concealed in finished spaces and may be exposed in industrial spaces except where indicated on the DRAWINGS.
2. Exposed runs of conduits shall be installed with runs parallel or perpendicular to walls, structural members or intersections of vertical planes and ceilings, with right angle turns consisting of symmetrical bends or pull boxes as indicated on the DRAWINGS. Bends and offsets shall be avoided where possible.
3. Where conduits are run individually, they shall be supported by approved pipe straps, secured by means of: 1) toggle bolts or hollow masonry; 2) expansion shields and machine screws or standard preset inserts on concrete or solid masonry; 3) machine screws or bolts on metal surfaces, and wood screws on wood construction. The use of perforated straps or wires will not be permitted.
4. Concrete inserts and pipe straps installed shall be stainless steel unless otherwise noted on the DRAWINGS. All bolts, nuts, washers, and screws shall be stainless steel. Individual hangers, trapeze hanger, and rods shall be prime-coated and painted. Conduit support clamps shall be the two-piece type.
5. Conduit support struts, clamps, bolts, nuts and washers installed outdoors and in corrosive atmosphere indoors or on floors shall be stainless steel.
6. In furred ceilings, conduit runs shall be supported from structure, not furring.

3.02 TERMINATIONS AND SPLICES

A. Terminations of power cable shall be by means of U.L. approved connectors. All connectors shall meet U.L. 486B and shall be compatible with the conductor material.

B. Splicing of power, control, or instrumentation wiring will not be allowed except by written approval of the ENGINEER. Where splicing is allowed, splices shall be made waterproof regardless of location.

3.03 GROUNDING

A. General – Grounding shall be as indicated, and as required by NFPA 70 and ANSI-C2.

B. Grounding Connections – Grounding connections which are buried or otherwise normally inaccessible, and excepting specifically those connections for which access for periodic testing is required, shall be made by exothermic weld. Exothermic welds shall be made strictly in accordance with the weld manufacturer's written recommendations. Welds which have "puffed up" or which show convex surfaces, indicating improper cleaning, are not acceptable. No mechanical connector is required at exothermic weldments.

C. Grounding Grid System – Conductors shall be buried a minimum of 24 inches in the ground. All cable crossings shall be securely bonded and the system connected to the ground system as well as to all equipment and structural steel work, and to all water piping.

D. Grounding Conductors – Conductors shall be insulated copper wire and sized as required by National Electrical Code.

3.04 FIELD TESTS

A. As an exception to requirements that may be stated elsewhere in the Contract, the ENGINEER shall be given five working days' notice prior to each test. The CONTRACTOR shall demonstrate that all circuits and devices are in good operating conditions.

B. Test on 600 volt wiring – Verify all 600 volt wiring has no short circuits or accidental grounds. Perform insulation resistance tests on all wiring using an instrument which applies a voltage of approximately 500 volts to provide a direct reading of resistance. Minimum resistance shall be 1 megohm. The conductor loop resistance of each pair shall also be measured. The mutual capacitance between conductors of each pair shall also be measured. Provide written results for approval.

3.05 WIRE AND CABLE INSTALLATION

A. Conductors shall not be pulled into raceway until:

1. Raceway system has been inspected and approved by the ENGINEER.
2. Plastering and concrete have been completed in affected areas.
3. Raceway system has been freed of moisture and debris.

B. Conductors of No. 8 size and smaller shall be hand pulled. Larger conductors may be installed using power winches. Wire pulling lubricant, where needed, shall be U.L. approved. Wire in panels, cabinets, and gutter shall be neatly grouped, using nylon tie straps, and fanned out to terminals.

C. Building wire conductors THHN / THWN installed below grade, or in concrete slabs on grade, shall have type RHW-USE insulation, 600 volt. Building wire shall be stranded.

D. Each cable or wire in panels, pull boxes, manholes, or troughs shall have a permanent identification, with numbers and letters indicated on the conduit and cable schedule. For underground cable identification tag, see drawing.

E. Lubricants – Lubricants for assisting in the pulling of cables shall be those specifically recommended by the cable manufacturer. The lubricant shall not be deleterious to the cable sheath, jacket, or outer coverings, and shall be U.L. approved. Use Polywater J or equal.

F. Cable Pulling Tensions – Shall not exceed the maximum pulling tension recommended by the cable manufacturer.

3.06 MOUNTING AND SUPPORTING ELECTRIC EQUIPMENT

A. Furnish and install all supports, hangers, and inserts required to mount fixtures, conduits, cables, pull boxes, and other equipment furnished under this section or furnished for installation under this section.

B. All items shall be supported from the structural portion of the building and studs, except standard ceiling-mounted lighting fixtures and small devices, that may be supported from ceiling system where permitted by the ENGINEER. However, no sagging of the ceiling will be permitted. Supports and hangers shall be of types approved by Underwriter's Laboratories.

C. Perforated straps and wire are not permitted for supporting electrical devices. Anchors shall be of approved types.

D. All supports, hangers, hardware, etc. used outdoors, shall be stainless steel and in corrosive atmosphere, or in hazardous areas shall be nonferrous, corrosion resistant, or stainless steel. Supports shall be selected to avoid galvanic reactions. Support devices shall be submitted for approval.

3.07 UNDERGROUND WORK

A. Excavation for Electrical Work

Excavation or drilling, backfill and repair of paving and grassing is to be in the bid of the electrical contractor. The actual WORK need not be performed by electrical trades. However, the electrical contractor is responsible for all excavation, drilling, dewatering, backfilling, tamping, and repair of pavements and grassing required in support of electrical work. All areas disturbed by electrical work shall be repaired to their original conditions, or as indicated on the DRAWINGS.

B. Coordination

The electrical contractor must check for existing utilities before commencing any excavation or drilling. Contract Drawings and other trades are to be consulted to avoid interference with other utilities on this project. In the event of damage to existing utilities, the CITY and ENGINEER shall be immediately notified, and the damage shall be immediately repaired at no cost to the CITY.

C. Precautions

The electrical contractor must take every reasonable precaution to avoid interferences. In the vicinity of a suspected interference, excavations shall be dug by hand.

D. Excavating, Drilling and Backfilling

1. Materials for backfill shall be as specified in Specification 02221 – Trenching, Bedding and Backfill for Pipe.
2. Locate and protect existing utilities and other underground work in a manner which will insure that no damage or service interruption will result from excavating and backfilling.
3. Protect property from damage which might result from excavating and backfilling.
4. Protect persons from injury at excavations, by shoring up, and using barricades, warnings and illumination.
5. Coordinate excavations with weather conditions, to minimize the possibility of washouts, settlements, and other damages and hazards.
6. Dewater excavations as necessary. Protect excavations from inflow of surface water. Pump minor inflow of ground water from excavations; protect excavations from

major inflow of ground water by installing temporary sheeting and waterproofing. Provide adequate barriers which will protect other excavations and below grade property from being damaged by water, sediment, or erosion from or through the electrical work excavations.

7. No organic material is permitted in backfill. All vegetation, peat, sod or other organic matter shall be removed from the premises.
8. Except under roadways, backfill material shall be clean sand or shell rock. No debris or trash may be used as backfill.
9. Under roadways, backfill material shall be the same as comprising the road bed.
10. Backfill excavations using 8-inch high courses of backfill material, uniformly compacted to 95 percent density per ASTM Standard D1557, using power-driven, hand-operated compaction equipment. Watering the backfill for compaction is not an acceptable method.
11. Backfill to elevations matching adjacent grades. Where subsidence is measurable or observable at electrical work excavations during the warranty period, remove the surface (pavement, lawn or other finish) add backfill material, compact, and replace the surface treatment. Restore the appearance, quality, and condition of the surface or finish to match adjacent WORK, and eliminate evidence of restoration to the greatest extent possible.
12. Where excavation and backfill for electrical work passes through or occurs in a landscaped area, repair or replace the landscape work to match the original condition and quality of WORK.
13. Where excavation and backfill for electrical work passes through or occurs in an area of paving or flooring, replace and restore the construction and finish of the paving or flooring to match the original condition and quality of the WORK.

E. Underground

1. Underground conduits not under concrete slabs, shall be buried at least two feet below finished grade for circuits rated 600 volts or less, except under traffic areas, conduits shall be buried at least three feet below finished grade.
2. Where steel conduit penetrates ground or concrete, the conduit shall be painted with two coats of asphaltic base paint one foot on each side of penetration.
3. Transition from PVC to RGS shall be made prior to elbow below grade. Paint RGS with bitumastic, 12 inches above and below grade.

3.08 CONCRETE MANHOLES AND PULL BOXES

A. Provide precast concrete manholes and pull boxes as indicated on the DRAWINGS. Manholes and pull boxes shall be installed on firmly compacted ground level and plumb at the elevations indicated on the DRAWINGS. Manholes and pull boxes shall be equipped with pulling-in irons opposite and below each ductway entrance. Manholes and pull boxes shall have cable supports so that each cable is supported at a minimum of 3 foot intervals within the manhole or pull box. Cable supports shall be fastened with galvanized bolts and shall be fabricated of fiberglass or galvanized steel.

Make provision for drainage and grounding. Install grounding rods at each manhole.

B. Traffic Covers – H-2-044 traffic rated covers shall be provided for manholes and pull boxes with identification as follows:

ELECTRIC" where voltages within are 600 volts and less. "SIGNAL" for instrumentation, telephone, and control.

C. Covers and frames shall be cast iron or hot dip galvanized.

End bells shall be cast in boxes by precast manhole manufacturer for all conduit entrances indicated on the DRAWINGS.

D. Every manhole shall be equipped with 24" x 24" concrete knockouts for future conduit installation on two opposing walls.

3.09 CONDUIT INSTALLATION

A. General – Conduits in structural slabs shall be placed between the upper and the lower layers of reinforcing steel, requiring careful bending of conduits. Conduits embedded in concrete slabs shall be spaced not less than eight inches on centers or as widely spaced as possible where they converge at panels or junction boxes. Conduits running parallel to slab supports, such as beams, columns and structural walls, shall be installed not less than 12 inches from such supporting elements. To prevent displacement during concrete pour, saddle supports for conduit, outlet boxes, junction boxes, inserts, etc., shall be secured.

3.10 WIRE AND CABLE INSTALLATION

A. Installation of Cables in Manholes, Handholes, and Vaults. Do not install cables utilizing the shortest route, but route along those walls providing the longest route and the maximum spare cable lengths. Form all cables to closely parallel walls, not to interfere with duct entrances, and support on brackets and cable insulators. In existing manholes, handholes and vaults where new ducts are to be terminated, or where new cables are to be installed, the existing installation of cables, cable supports, and grounding shall be modified as required for a neat and workmanlike installation, with all cables properly arranged and supported. Support cable splices in underground structures by racks on each side of the splice. If splicing is approved, locate splices to prevent cyclic bending in the spliced sheath and out of the water. Install cables at middle and bottom of cable racks, leaving top space opening for future cables, except as otherwise indicated. Provide one spare three- insulator rack arm for each cable rack in each underground structure.

B. Cable Markers (or tags) in Manholes and Handholes – Provide cable markers or tags for each cable or wire passing through or leaving manholes or handholes and at each terminal. Tags shall be stainless steel, bronze, lead strap, or copper strip, approximately 1/16 inch thick, or hard plastic 1/8 inch thick, suitable for immersion in salt water, and of sufficient length for imprinting the legend on one line, using raised letters not less than 1/4 inch in size, and shall be permanently marked or stamped with the identification as indicated. Use of two color laminated plastic is acceptable. Plastic markers shall be dark in color, and markings shall be light in color to provide contrast so that identification can be easily read. Fastening material shall be of a type that will not deteriorate when exposed to water with a high saline content.

C. All supports, hangers, hardware, etc. used outdoors, shall be stainless steel. In corrosive atmosphere, or in hazardous areas, shall be non-ferrous, corrosion resistant, or stainless steel. Supports shall be selected to avoid galvanic reactions. Support devices shall be submitted for approval.

D. Spare conduits shall be on top or accessible sides and identified uniquely at each location and active conduits shall be located on the bottom unless noted otherwise.

END OF SECTION

SECTION 16110 RACEWAY AND BOXES

PART 1 - GENERAL

1.01 SCOPE

A. This Section includes basic materials and electrical methods for all of Division 16, Electrical and Related WORK.

PART 2 - PRODUCTS

2.01 RACEWAYS AND FITTINGS

A. Liquid tight Flexible Nonmetallic Conduit shall be used for all connections to vibrating equipment, such as motors, valves, and devices on piping or ductwork. Liquid tight flexible nonmetallic conduit shall conform to NEC Article 356 as manufactured by Appleton, Robroy, or Anaconda. LTFNMC and fittings shall be as manufactured by Midwest or Robroy and shall be listed.

B. Rigid Nonmetallic Conduit – Polyvinyl chloride (PVC) conduit, boxes and fittings shall conform to NEMA TC-2 and to Military Specifications MIL-C-23571 for Type II, Schedule 80 unless noted otherwise.

C. Wireways and Auxiliary Gutters – Wireways and auxiliary gutters shall be galvanized steel with removable covers unless indicated as hinged. Components shall be as manufactured by Square 'D', Hoffman, Keystone, or General Electric. All wireways shall be without manufactured knockouts.

2.02 BOXES AND ACCESSORIES

A. PVC Boxes and accessories shall conform to UL 498, with enclosure ratings NEMA 4, 4X, 12 and IEC IP66 as manufactured by Leviton Wetguard® or approved equal.

B. Concrete pull boxes shall be of the open bottom type, with an iron, locking cover marked "ELECTRIC" or "SIGNAL" as applicable, and shall be U.L. Listed and meet all codes.

PART 3 - EXECUTION

3.01 RACEWAYS

A. Use rigid, nonmetallic conduit as follows, unless noted otherwise: Grounding systems, utility systems, power and control systems throughout.

B. Use liquid tight, flexible nonmetallic conduit for all connections to vibrating equipment, such as motors, valves, and devices on piping or ductwork. The maximum length shall be restricted to 18" or less, any longer lengths must have approval. (A green bonding conductor is required in all runs, with other conductors.)

C. Install exposed conduit parallel with, or at right angles to the building lines. Conduit larger than 1", except as indicated, in reinforced concrete slabs shall be parallel with, or at right angles to the supports of the slab. Conduit in concrete shall be located so as not to affect the structural strength of the slabs. Conceal all conduits in walls, above ceilings, in or under slabs or in furring, except in mechanical and electrical rooms and as indicated.

D. Route feeders, home runs, and conduits where indicated, except those minor deviations as approved, will be permitted.

3.02 BOXES AND ACCESSORIES

A. Minimum size outlet box shall be 4" square by 1-1/2" deep unless otherwise approved or indicated otherwise.

B. Use non-metallic FD boxes constructed of rigid PVC as manufactured by Leviton Wetguard throughout.

3.03 MISCELLANEOUS

A. Provide approved fire stopping materials at all chases to prevent drafts.

B. Provide expansion fittings in conduit runs crossing expansion joints in the structure.

C. Provide Jet Line #232 in all empty conduits.

D. Conduit fittings shall be for use with Schedule 80 PVC conduit.

END OF SECTION

SECTION 16120 CONDUCTORS

PART 1 - GENERAL

This Section includes basic materials and methods for all of Division 16, Electrical and Related WORK.

1.01 RELATED WORK SPECIFIED ELSEWHERE

A. Signal Conductors

1.02 APPLICABLE REQUIREMENTS

NEC Article 310 and 400
F.S.J-C-30
F.S.W-S-6106

PART 2 - PRODUCTS

2.01 CONDUCTORS

A. Conductors shall conform to Federal Specification J-C-30 for 600 volt, Types THWN/THHN, or XHHW stranded or as shown on the DRAWINGS. Sizes are AWG unless otherwise noted.

B. Grounding conductors larger than Size 1 AWG shall be soft drawn, bare copper or insulated copper. Control conductors for 100 to 600 volt shall be size 14 AWG copper, stranded, and color coded unless indicated otherwise.

C. Control conductors for 50 volt and under shall be plastic jacketed thermostat cable, Size 18 AWG single conductor, copper, multi-conductor as required. Fixture wire shall be Type THHN for all through wiring where permitted.

2.02 PORTABLE CORDS

A. Portable cord shall be stranded copper, UL Listed, and resistant to water, acid, and alkalis.

B. Each cord shall have one green covered conductor that shall be used as a grounding conductor.

2.03 SPLICES AND TERMINATIONS

A. Connections shall comply with Federal Specification W-S-610b. Connectors for temperatures to 105NC shall be Ideal Wing Nut or 3M-Scotchloc.

B. Tape shall be Scotch 33 or slip-knot grey. Voids shall be filled with rubber tape or Scotchfill.

C. Terminal boards shall be General Electric, Type CR151, type A2. Lugs for the terminal boards shall be the locking tongue type. Control terminals and motor connections up to size 3 shall be ring tongue type as manufactured by T&B Sta-Kon.

D. Heat shrink for all splices outdoors. Insulating and sealing of all in-line, cable splices from 16 AWG through 1000 kcmil shall be done in accordance with the instructions provided with the Shrink-Kon heat shrinkable insulators, catalog series HS as manufactured by Thomas & Betts.

E. The connector insulator must be made of thermally stabilized, homogeneous polyolefin having internally applied sealant. It must have Underwriter's Listing (UL48, 90NC, 600V) and be approved for the use. It must be usable without additional covering or adhesive, both indoors and outdoors, in overhead, direct buried, or submersed applications at rated voltage. It must not be adversely affected by moisture, ozone, oils, fuels, mild acids and

alkalis, or ultraviolet light. It must be compatible with all commonly used cable jacket materials including rubber, plastic, lead, steel, aluminum, and copper. All conductors larger than #10 shall have Noalox Non-Corrosive Paste applied to wires' ends and terminals before connections are made. This will prevent or retard corrosion.

PART 3 - EXECUTION

3.01 CONDUCTORS

A. Conductors size 10 AWG and smaller shall be copper and have insulation colored for phases A, B, and N respectively as follows for single phase systems: 120/240 volts, black, red, and white.

B. All-bonding conductors shall have a green covering and shall be the same size as the circuit conductors unless otherwise indicated.

C. Installation of conductors shall be made only in completed raceway systems and all conductors in any conduit shall be pulled in together.

D. Use wire pulling compounds or lubricants as listed by Underwriters' Laboratories or talc, graphite, or soapstone.

3.02 SPLICES AND TERMINATIONS

A. Use solder-less terminal lugs on all standard conductors. Use approved solder-less connectors for all splices. Keep splices to a minimum.

B. Splice all neutrals prior to connection to wiring devices. Splices other than pre- insulated connectors shall be covered neatly with insulation type equivalent in value to the conductor insulation. Use minimum of 2 layers of tape.

3.03 PHASING AND IDENTIFICATION

A. The phase designation of all secondary conductors shall be the same and shall be indicated in or on all 3-phase outlets, transformers, panelboards, and disconnect switches, and they shall be connected with uniform phase sequence.

B. Control wiring shall have a Brady® label or equal attached, secured with a clear piece of heat shrink tubing over the numbers. The numbers shall be attached 1 inch from each end. Tag each individual conductor or wire with a label stating the terminal designation indicated on schematic diagrams, or given on manufacturer's equipment lists, and at each terminal strip, relay, etc.

3.04 NUMBER OF CONDUCTORS

A. For convenience and simplicity, wire tics are shown only on home runs other than power circuits. The CONTRACTOR shall determine the correct combination of wires to be run in all raceways including home runs, branch circuit wiring and switch legs.

B. A green ground wire must be included in all conduits. Neutral wires shall be determined by the load and proper phasing on multi-wire branch circuits.

C. All conductors shall have identification per NEC and local codes.
   1. Colored tape for feeder conductors should be secured on the conductor with clear piece of heat shrink tubing.

D. Conduit fill shall be sized per National Electric Code. All 120 volt circuits shall each have individual neutrals.

3.05 TESTING

A. After wiring has been pulled in raceways and before hook-up, wires shall be subject to an insulation test. A Megohmeter of 500 volts shall be used, and a minimum of 10 megohms will be acceptable. Test shall be witnessed by the ENGINEER. A 48-hour notification must be given before test(s) commence. It is typical that wire was abused during installation, usually due to lack of lubrication. The test will reveal any damage to insulation on wiring.

END OF SECTION

SECTION 16140 WIRING DEVICES

PART 1 - GENERAL

1.01 RELATED WORK SPECIFIED ELSEWHERE Basic Materials & Methods

1.02 APPLICABLE DOCUMENTS

NEMA WD-1 – Wiring Devices, Non-locking
NEMA WD-5 – Wiring Devices, locking type
F.S. W-S-896c – Toggle Switch
F.S. W-P-455a – Wall Plates

PART 2 - PRODUCTS

2.01 RECEPTACLES

A. All receptacles shall be the grounding type and shall conform to applicable portions of NEMA Standards WD-1 and WD-5.

NEMA Configuration - #5-20, duplex, Ivory
P & S #5342-I
Leviton - #5342-I
NEMA Configuration #1050
Hubbell - 7512-G receptacle
Hubbell - 7118 stainless steel plate
Hubbell - 7914 cord set (length as required)

2.02 SWITCHES

A. Toggle switches shall conform to Federal Specification W-S-896c, A.C., only type switch.

20 ampere, 120-277 volt, Ivory
Leviton - 1121-I, 1123-I
P & P - 521-I, 523-I

2.03 PLATES AND COVERS

A. Wall plates for recessed devices shall conform to Federal Specification W-P-455a and shall be of Ivory color with matching screws unless indicated otherwise, and of the configuration required for the devices installed.

Leviton - 86000 Line, P & S or equal

Surface (raised) covers for 4" square boxes shall be 1/2" deep.

Surface covers shall be as manufactured by Steel City, Appleton or Raco of the configuration required. Cover plates indicated (WP) weatherproof shall be made of Type 302 stainless steel with stainless steel springs, screws and gaskets. Sierra Series "WP" of the configuration required.

2.04 ATTACHMENT CAPS AND CONNECTORS

A. Caps shall be NEMA Standard mates to the receptacles and connectors used and shall be as manufactured by Hubbell. Provide one cap for each receptacle other than the duplex type.

B. Electrical contractor shall connect all equipment furnished by CITY or other contractors, including caps and cords and materials required to complete the installation.

PART 3 - EXECUTION

3.01 Install plates and covers on all outlets. Install all devices uniformly in each area. Use 20 ampere switches and receptacles everywhere.

3.02 Install a cord and cap (plug) on all equipment indicted "c & p" on the schedules. Connect the top half of split receptacles hot and use the bottom as the switched section. Test each socket of each outlet with a device intended for this purpose. Gang switches and dimmers where feasible.

3.03 MOUNTING HEIGHTS (TO CENTER LINE OF BOX):

A. Generally mount outlets 36" up unless noted.

B. Mount switches and dimmers at 48" up.

C. Mount outlets over mirrors 8" higher than mirror.

D. Mount outlets over counters and centered in the back splash where it occurs.

E. Adjust outlet heights in ceramic tile walls to be entirely in or entirely out of the tile.

F. Outlets may be horizontal to meet space conditions.

G. Mount exhaust fan thermostats 2' from ceiling and bypass switch 48" from finished floor.

END OF SECTION

SECTION 16180 SAFETY SWITCHES, CIRCUIT BREAKERS, AND SWITCHES

PART 1 - GENERAL

1.01 RELATED WORK SPECIFIED ELSEWHERE

Applicable Documents:
NEMA AB-1 – Molded Case Circuit Breakers
NEMA IC-1 – Industrial Control
F.S. W-S-865c – Enclosed Switches
F.S. W-C-375a – Circuit Breakers
U.L.-198 – Fuses
NEMA FU-1 – Fuses

1.02 SUBMITTALS

Submit Shop Drawings for review including catalog cuts showing sizes, types, and characteristics of all products.

PART 2 - PRODUCTS

2.01 SAFETY SWITCHES/CIRCUIT BREAKER DISCONNECTS

A. Safety switches shall conform to Federal Specifications W-S-865c, heavy duty type HD, fusible or non-fusible, with the poles, ampere, voltage, and horsepower ratings indicated and shall have solid neutrals and Class R clips. Lugs shall be U.L. listed for copper-aluminum.

B. Enclosures for safety switches shall be NEMA-1, general purpose, except that switches indicated (WP) weatherproof, shall be NEMA-3R unless marked NEMA-4. Provide hubs as required for NEMA-3R enclosures with suitable gaskets and bonding means.

C. Switches and disconnects shall be as manufactured by Square 'D', General Electric, Siemens, or Eaton.

D. Circuit breaker disconnects may be used in lieu of safety switches providing they comply with the safety switch requirements and are applied within their ratings and a schedule is submitted for approval.

2.02 CIRCUIT BREAKERS, MOLDED CASE

A. Circuit breakers shall conform to Fed. Spec. W-C-375a and NEMA Standard AB-1 unless indicated otherwise. Circuit breakers shall be of the ampere rating, voltage rating, number of poles and class or interrupting capacity (I.C.) as indicated. Interrupting ratings are given in root mean square (RMS), symmetrical amperes based on NEMA test procedures. Lugs and terminals shall be U.L. listed for copper- aluminum. Accessories shall be 120 volt.

B. Each circuit breaker shall have a trip unit for each pole with elements providing inverse time delay under overload conditions and instantaneous magnetic trip for short circuit protection unless indicated as non-automatic. Trip elements shall operate a common trip bar to open all elements.

2.03 FUSES

A. Provide rejection fuses for all fusible equipment regardless of which section has furnished such equipment.

B. Fuses shall be of the ratings shown on the DRAWINGS, U.L. listed and shall be Bussman Manufacturing Co., Gould-Shawmut Company, CEFCO or approved equal.

C. All fuses shall be current limiting and have an interrupting capacity of at least 200,000 amperes RMS symmetrical.

D. The time-current characteristics and ratings shall be such that positive selective coordination is assured.

E. Fuses, 600 amperes and lower, where applied to general feeder and branch circuit protection, shall conform to U.L. Class RK-1 standards and be Bussmann Type LPN- RK-SP LPS-RK-SP, "Low Peak". Gould-Shawmut dual element "Amp-Trap."

F. Fuses, where required for circuit breaker protection shall conform to U.L. Class RK-1 standards and be Bussmann Type LPN-RK-SP or LPS-RK-SP "Low Peak", or Gould- Shawmut Class RK1 "Amp-Trap."

G. Coordination and current limitations or the protection of each part of the electrical system must be designed around the type and class and manufacturer selected for that type and class.

PART 3 - EXECUTION

3.01 INSTALLATION

A. Mount grouped switches, disconnects and controls on backboards or unistrut. Provide labels on or in all fusible equipment indicating the type and size replacement fuse required.

B. Generally, mount switches and disconnects between 4' and 5' A.F.F., readily accessible.

3.02 FUSES

A. Install all fuses as required where indicated on the DRAWINGS and where required by the National Electrical Code, special attention shall be given to air conditioning equipment.

B. Provide 10% spares (minimum of three) of each size and type of fuses furnished. Spare fuses shall be placed in a wall mounted cabinet equal to: Bussmann SFC which shall be located in the switchgear room.

END OF SECTION

SECTION 16195 ELECTRICAL IDENTIFICATION

PART 1 - GENERAL

1.01 RELATED DOCUMENTS

A. DRAWINGS and general provisions of the Contract, including General and Supplementary Conditions and Division 1 Specification Sections, apply to this Section.

1.02 SUMMARY

A. Section includes equipment identification labels.

1.03 SUBMITTALS

A. Product Data – For each electrical identification product indicated.

B. Identification Schedule – An index of nomenclature of electrical equipment and system components used in identification signs and labels.

1.04 QUALITY ASSURANCE

A. Comply with ANSI A13.1.

B. Comply with NFPA 70.

C. Comply with 29 CFR 1910.144 and 29 CFR 1910.145.

D. Adhesive-attached labeling materials, including label stocks, laminating adhesives, and inks used by label printers, shall comply with UL 969.

1.05 COORDINATION

A. Coordinate identification names, abbreviations, colors, and other features with requirements in other Sections requiring identification applications, DRAWINGS, Shop Drawings, manufacturer's wiring diagrams, and the Operation and Maintenance Manual; and with those required by codes, standards, and 29 CFR 1910.145. Use consistent designations throughout Project.

B. Coordinate installation of identifying devices with completion of covering and painting of surfaces where devices are to be applied.

C. Coordinate installation of identifying devices with location of access panels and doors.

PART 2 - PRODUCTS

2.01 UNDERGROUND-LINE WARNING TAPE

A. Tape
   1. Recommended by manufacturer for the method of installation and suitable to identify and locate underground electrical, controls and I&C raceways.
   2. Printing on tape shall be permanent and shall not be damaged by burial operations.
   3. Tape material and ink shall be chemically inert, and not subject to degrading when exposed to acids, alkalis, and other destructive substances commonly found in soils.

B. Color and Printing
   1. Comply with ANSI Z535.1 through ANSI Z 535.5.
   2. Inscriptions for Red-Colored Tapes: ELECTRIC LINE, LOW VOLTAGE.
   3. Inscriptions for Orange-Colored Tapes: I&C CABLE, OPTICAL FIBER CABLE.

2.02 EQUIPMENT IDENTIFICATION LABELS

A. Self-Adhesive, Engraved, Laminated Acrylic or Melamine Label – Adhesive backed, with white letters on a dark-gray background. Minimum letter height shall be 3/8 inch.

PART 3 - EXECUTION

3.01 INSTALLATION

A. Verify identification of each item before installing identification products.

B. Location – Install identification materials and devices at locations for most convenient viewing without interference with operation and maintenance of equipment.

C. Apply identification devices to services that require finish after completing finish WORK.

D. Self-Adhesive Identification Products – Clean surfaces before application, using materials and methods recommended by manufacturer of identification device.

E. Underground-Line Warning Tape – During backfilling of trenches install continuous underground-line warning tape directly above line at 6 to 8 inches (150 to 200 mm) below finished grade. Use multiple tapes where width of multiple lines installed in a common trench exceeds 16 inches overall.

3.02 IDENTIFICATION SCHEDULE

A. Locations of Underground Lines – Identify with underground-line warning tape for electrical, controls and I&C wiring and optical fiber cable.

B. Equipment Identification Labels – On each unit of equipment, install unique designation label that is consistent with wiring diagrams, schedules, and the Operation and Maintenance Manual. Apply labels to disconnect switches and protection equipment, central or master units, control panels, control stations, terminal cabinets, and racks of each system. Systems requiring labels include power, lighting, control, and I&C unless equipment is provided with its own identification.

1. Labeling Instructions
   a. Indoor Equipment – Self-adhesive, engraved, laminated acrylic or melamine label. Unless otherwise indicated, provide a single line of text with 1/2 inch high letters on 1-1/2 inch high label; where two lines of text are required, use labels 2 inches high. Utilize white lettering on black background.
   b. Outdoor Equipment: Self-adhesive, engraved, laminated acrylic or melamine label. Unless otherwise indicated, provide a single line of text with 1/2 inch high letters on 1-1/2 inch high label; where two lines of text are required, use labels 2 inches high. Utilize white lettering on black background.
2. Equipment to Be Labeled
   a. Enclosures and electrical cabinets
   b. Motor Control Centers
   c. Enclosed switches
   d. Variable Frequency Drives
   e. Monitoring and control equipment

END OF SECTION

SECTION 16450 GROUNDING

PART 1 - GENERAL

1.01 SCOPE

A. This Section includes basic materials and methods for all Division 16 and related electrical work.

1.02 APPLICABLE REQUIREMENTS

A. National Electric Code (NEC)

PART 2 - PRODUCTS

2.01 GROUND RODS

A. Ground rods shall be a minimum of 5/8" diameter by 20' length & copper-clad, unless otherwise specified. Grounding accessories shall be as manufactured by Burndy, Erico or Thompson.

PART 3 - EXECUTION

3.01 INSTALLATION

A. End to end fixtures shall be continuously bonded. Grounding contact of receptacles shall be connected to a solidly grounded conduit system or to a system grounding conductor (not the system neutral) by a stranded copper wire not smaller than 12 AWG or shall be grounded in some other approved manner.

B. Bond all metal parts. Make equipment and bus connections with suitable lugs or clamps. Cadweld all wire-to-ground rod joints. Cadweld all wire-to-wire joints size 1/0 AWG and over.

C. Bond all conduits stubbing under switchboards, transformers and similar locations using bonding bushings. Bond each conduit separately.

D. Provide a bonding wire from grounding bushings on all conduit terminated at panels, boxes, wireways, panels, etc.

E. Provide a bond wire in all flexible metal conduits and connect to the boxes at each end in an approved manner.

F. Use PVC for sleeving grounding conductors, except that where sleeves are subject to extreme injury use rigid metal conduit bonded at both ends.

G. Ground all separately derived sources such as transformers to adjacent cold water pipe or building steel in accordance with NEC.

H. Grounding of all equipment should be accomplished with lugs equal to T & B "Locktite" one bolt hole tongue #31003 or equal.

I. All conduit to Service entrance equipment and Transfer Switch along with Load Center shall have Grounding Bushing on all conduit and ground to box, cabinet, etc. This will give an added protection in grounding all the electrical systems.

END OF SECTION

SECTION 16960 LIFT STATION CONTROL CABINET

PART 1 - GENERAL

1.01 DESCRIPTION

A. The Control Diagrams and One-Line Diagrams and these Specifications depict the minimum functional requirements of the control system provided under this Section. The pump system's supplier shall provide all materials and controls necessary to provide a safe and operable system at the Pump Stations. The specific control system proposed shall be subject to the approval of the ENGINEER.

1.01 RELATED SECTIONS

A. Section 01015 – General Requirements

B. Section 01340 – Shop Drawings, Working Drawings and Samples

C. Section 16050 - Basic Electrical Materials and Methods

D. Other Sections as applicable.

1.02 REFERENCES

A. UL 508 – Standard for Industrial Control Equipment

B. IEEE 28-1972 - Standard for Surge Arresters (Lightning Arresters) for Alternating Current Power Circuits

C. IEEE C62.41.2 - Recommended Practice on Characterization of Surges in Low- Voltage (1000 V and Less) AC Power Circuits

D. NEMA Publication 250 – Enclosures for Electrical Equipment (1000 volts Maximum)

E. NFPA 70: National Electrical Code

F. Add as many references as required

1.03 APPROVED MANUFACTURERS:

A. Custom Controls Technology, Inc.

B. Atlantic Environmental

C. Champion Controls

D. Hall Fountain

E. No Substitutions Permitted

1.04 SUBMITTALS

A. Comply with Section 01340 – Shop Drawings, Working Drawings and Samples and Division 16, Electrical.

B. Provide complete and detailed manufacturer's and pump system supplier's descriptive information, and integrated shop drawings on the following items proposed for the pump station:

1. Wiring and control ladder diagram.
2. Interconnection diagram.
3. Enclosure shop drawing.

4. Power supply.
5. Terminal blocks.
6. Control relays.
7. Electrical transient protection.
8. Alarm lights.
9. Push button, indicating lights and selection switches.
10. Elapsed time meters
11. Programmable controller.
12. Motor starters.
13. Level control system including level indicator/controller, and all associated equipment, piping, valves, and fittings.
14. Circuit breaker and interlocks.
15. Instrumentation system schematic.
16. Special mechanical and electrical features (e.g., power cables, etc.) required for pump systems to meet Class I, Division 2 requirements.
17. Enclosures.
18. Conduit and Pull Box Schematic Drawings.

C. Incomplete submittals by the pump system's supplier (e.g., catalog cuts with no integrated or coordinated drawings depicting equipment function or operation) will be returned without action.

PART 2 - PRODUCTS

2.01 GENERAL

A. All discrete input and output signals of the control panels to/from devices external to this pump package shall be isolated contact closures, rated for 10 amps, 120V AC continuous service.

B. All panel construction shall be completed in a UL 508 Panel Fabricator Shop, and be UL 508 labeled. Panel shall also be UL labeled as Service Entrance Equipment.

2.02 CONTROL CABINET

A. The Control Panel Shall Include:

1. Terminal blocks for all incoming or outgoing conductors.
2. All identified and necessary operator interface devices.
3. Control hardware.
4. UPS for control functions.
5. All necessary control and time delay relays.
6. All necessary alarms, fuses, circuit breakers and other miscellaneous items necessary to fulfill the functions described or required in this and other applicable sections of these Specifications.
7. 24 V power supply.
8. Other electrical equipment shall be as specified on DRAWINGS.
9. Provide volatile corrosion inhibiting capsules in each control panel to protect all exposed metal surfaces for a period of at least 2 years.

B. Control cabinet fabrication, electrical components and wiring, and workmanship shall conform to the following requirements:

1. Control cabinet shall be grey powder painted steel with an internal framework as

required for equipment support and panel bracing. The internal framework shall permit panel lifting without racking or distortion. The control cabinet shall be at least NEMA 4X rated enclosure.

2. Dead front door in the enclosure to be fabricated of marine grade aluminum.
3. All doors shall be rubber-gasketed with continuous hinge and a 3-point latching system. A suitably sized Type 316L stainless steel hasp and staple shall be mounted on the cabinet for pad locking of the enclosure.
4. Circuit breaker handles shall extend through dead front. Control devices shall be mounted on a swingout inner door, providing dead front construction of all internal wiring.
5. Provide a hand switch controlled F20 T8 fluorescent light, centered in the top of the panel, and a G.F.I. protected 120-volt, 15-amp duplex receptacle within the panel as specified on DRAWINGS
6. Power Supply
   a. The power supply to the panel will be a 120-volt,-phase, 60-Hz service entrance from the LDP panel, unless otherwise shown on the DRAWINGS. Interceptor capacity to be 22,000 amps minimum, size to actual available fault current.
7. Power Distribution Within Cabinets
   a. Provide a circuit breaker on each individual circuit distributed from the cabinet. The circuit breakers shall be grouped on a single subpanel. Provide subpanel placement so that there is a clear view of—and access to—the breakers when the exterior door is open. Circuit breakers shall meet specifications for circuit breakers elsewhere in this Section.
   b. Power wiring shall be distributed using power distribution terminal blocks. Leap frogging will not be acceptable.
8. Wiring
   a. All electrical wiring shall be in accordance with the applicable requirements of Paragraph Conductors. Wires shall be 600-volt class PVC insulated, stranded copper, and shall be of the sizes required for the current to be carried, and according to specification drawings enclosed in either sheet metal raceway or plastic wiring duct.
   b. All interconnecting wires between panel mounted equipment and external equipment shall be terminated at numbered terminal blocks. All wires shall be identified with shrink sleeve markers using machine written lettering.
   c. Panel shall be supplied with an UL 508, enclosed industrial control panel, label and be UL listed as Service Entrance Equipment.
9. Terminal Blocks
   a. Terminal blocks shall be one-piece molded plastic blocks with screw- type terminals and barriers rated for 300 volts. Terminals shall be double-sided and supplied with removable covers to prevent accidental contact with live circuits. Terminals shall have permanent, legible identification, clearly visible with the protective cover removed.
   b. Wires shall be terminated at the terminal blocks with crimp-type, pre-insulated, fork-tongue lugs. Lugs shall be of the appropriate size for the terminal block screws and for the number and size of the terminated wires.
10. Relays
   a. Control circuit switching shall be accomplished with relays. These relays, for interfacing and control applications, shall be the compact, general-purpose, plug-in type having low coil-inrush and holding current characteristics.

Contact arrangements shall be as noted or shown, and shall be rated for not less than 10 amperes at 120V AC or 28 VDC. Non-latching relays shall have a single coil. Latching relays shall have two coils, unlatching being accomplished by energizing one coil, and latching being accomplished by energizing the other coil. Relays shall have plain, plastic dust covers, test buttons, and mounting sockets with screw terminals and hold down springs, as shown on the DRAWINGS.

b. All relays shall have a screw terminal interface with the wiring. Terminals shall have a permanent, legible identification. Relays shall be mounted such that the terminal identifications are clearly visible and the terminals are readily accessible.

11. Nameplates
    a. Nameplates shall be engraved, rigid, laminated plastic type with adhesive back. Color shall be black with white letters. Letter height shall be 3/16 inch.
    b. Control devices for each motor shall be identified on the dead front, swing out panel.
    c. Panel shall be provided with a face mounted laminated nameplate as specified above. Color shall be black with white letters 1/2 inch high.
12. Electrical Power and Control Wiring
    a. Wiring in control panels shall be restrained by plastic ties or ducts. Hinge wiring shall be secured at each end so that any bending or twisting will be around the longitudinal axis of the wire and the bend area shall be protected with a sleeve.
    b. Arrange wiring neatly, cut to proper length, cut to fit from terminal to terminal, and remove surplus wire. Do not leave extra wire inside wire ways. Provide abrasion protection for any wire bundles that pass through holes or across edges of sheet metal.
    c. Use manufacturer's recommended tool, with the proper sized anvil, for all crimp terminations. No more than two wires may be terminated in single crimp lug and no more than two lugs may be installed on a single screw terminal.
    d. Wiring shall not be spliced or tapped, except at device terminals or terminal blocks.
13. Electrical Transient Protection
    a. Panels shall be equipped with suitable, surge-arresting devices to protect the equipment from damage from electrical transients induced in the interconnecting lines from lightning discharges or nearby electrical devices. Protective devices used on 120V AC inputs shall be secondary valve surge protectors conforming to the requirements of IEEE Standard 28-1972 (ANSI C62.1-1971). Provide analogs and signal surge protection for all analog signals.
    b. Manufacturers: As shown on DRAWINGS.
14. Thermal and Moisture Protector Monitoring Relay
    a. Install and wire any required protector-monitoring relay provided by pump manufacturer.
15. Wet Well Level Responsive Automatic Pump and Alarm Control System
    a. An automatic pump control system shall operate the pumps in accordance with variations in the wet well liquid level. The automatic control system shall employ a pressure transmitter, as shown on DRAWINGS.

16. Bubbler Level Monitoring System
    a. Bubbler Pump System
        1) Pump power: 115 VAC 60 Hz.
        2) Measuring range: As noted in the DRAWINGS.
        3) Manufacturers: As shown on DRAWINGS.
    b. Level Transmitter:
        1) Input: Pressure from bubbler system.
        2) Output: 4-20mA, loop powered.
        3) Measuring range: As noted in the DRAWINGS.
        4) Manufacturer: As shown on DRAWINGS.
    c. Bubbler system power shall be a separate, rail-mount (DIN, non-GFCI) outlet.
17. Uninterruptible Power Supply
    a. As shown on DRAWINGS
18. Low Voltage Power Supply
    a. 100 watts; 24-28 volts
    b. DIN Rail Mount.
19. Float Level Switch
    a. Type
        1) Ball float switch, mercury free.
    b. Functional/Performance
        1) Differential – Less than one inch.
        2) Switch Rating – 20 Amps at 120 VACS, 10 Amps at 240 VAC.
        3) Form C.
    c. Physical
        1) Float – Type 316 stainless steel.
        2) Switch – Totally encapsulated, mercury-free switch.
        3) Cable – Heavy duty, PVC jacketed integral to float.
    d. Options/Accessories Required
        1) Provide Type 316 stainless steel adjustable clamp tubes, pipe brackets, and U-bolts.
        2) The floats shall be mounted on a vertical 1-inch stainless steel pipe, with all stainless steel hardware.
        3) The lead wire shall be a waterproof cable of sufficient length to reach panel so that no splice or junction box is required in the wet well.
    e. Manufacturers
        1) Flygt, ENM-10
        2) Peabody Barnes, 73612XF
        3) Or approved equal
20. Liquid Level Pump/Controller
    a. The control system shall be completely functional and include not less than the following features:
        1) Controller and transducer to be integrated standard products from experienced manufacturers.
        2) 0 to 23 feet wet well level range.
        3) LED indicator for control and alarm circuit, as shown on DRAWINGS.
        4) Ten second time interval after one pump starts before another pump is allowed to start.
        5) 120V AC power supply, fused in controller.

6) Power line transient protection for control system. Surge protection unit shall be SOLA, Model STV25K.
7) Ten-amp, 250V AC rated control and alarm contacts.
8) Terminal blocks and power components UL 508 recognized.
9) Form C SPDT alarm relay contacts.
10) High and low, level alarm sensing.
11) UL listed barrier/clamp-type, rear terminal block to accept two AWG No. 12 per panel.
12) Extractor type fuse block, rear accessible.
13) Complete factory standard system.
14) One-year factory warranty on parts and labor.

b. An inner-door mounted ground fault interrupter (GFI) type convenience receptacle, rated at 20 amperes, shall be supplied for operating trouble lights, drill, etc.

c. Controller shall be Allen-Bradley Micrologix 1100 BWA with the following characteristics and appurtenances:
1) 10 - 24 V digital inputs
2) 2- 10 V analog inputs
3) 6 Digital relay outputs
4) Ethernet, RS-232, and Modular Communications Interface

d. Operator Interface Panel (OIP) shall be
1) Color 10.4 inch touchscreen
2) DC input
3) Allen-Bradley PanelView Plus 1000 interface

21. For Class I, Division 2 areas, utilize "EYSR" split-case fittings as manufactured by Crouse-Hinds, as required.

2.03 RADIO TELEMETRY AND SCADA SYSTEM COMPONENTS

A. Furnish and install the appropriate number and type of dry contacts to accommodate the telemetry system.

B. Furnish and install all other interface wiring, terminals, circuit breakers, etc., required to interface and power the telemetry unit from the control panel.

C. All appropriate space (e.g., blanks in panels, etc.) within the control cabinet for telemetry related accessories. See DRAWINGS.

D. The CITY may require coordination with their SCADA Contractor during construction. The CONTRACTOR shall provide coordination at no extra cost to the CITY.

2.04 ALARM LIGHT

A. Alarm light shall be flashing or revolving light type units that produce 360-degree beams of colored light. Flashing rate shall be 60 to 80 flashes per minute. Panel mounted beacons shall consist of one RED for the High Level alarm. Beacon shall operate at 120V AC. Light should be powered by UPS.

B. Housing shall be weatherproof, suitable for use in severe outdoor environments without other protection. Light should be installed outside station as per DRAWINGS.

C. Unit shall be:

1. As specified on DRAWINGS.

2.05 PUSH BUTTONS, INDICATING LIGHTS, AND SELECTOR SWITCHES

A. As specified on DRAWINGS.

2.06 TERMINAL BLOCKS 0 TO 600 VOLTS

A. As specified on DRAWINGS.

2.07 ELAPSED TIME METERS

A. As specified on DRAWINGS.

2.08 MOTOR STARTERS

A. Motor starters shall be as specified on DRAWINGS.

2.09 CURRENT TRANSFORMERS

A. Current Transformer Ratio shall be coordinated with the actual current of the installed motor.

B. Installed on phase of the motor leads to proportionately convert motor amperage to a readable 4 to 20 mA signal. Provide isolation as necessary.

C. Manufacturer: Rochester Instruments; or approved equal.

2.10 INTRINSIC SAFETY BARRIERS

A. Intrinsic safety barriers shall provide a safe energy level for exposed wiring in a Class I, Division I, and Group D area when the circuit in the non-hazardous area is connected to a nominal 24V DC source, maximum 28V DC with not more than 250V available under fault conditions. The circuit in the hazardous area shall be a contact closure. The entire circuit shall be floating with a negative signal common ground. The intrinsic safety barrier shall be rated 50 mA, minimum. Intrinsic safety barriers shall be mounted in boxes in such a manner as to make separation of hazardous and nonhazardous wiring convenient. The box shall have the works "Intrinsically Safety Circuit" on the lid. Intrinsic safety barriers shall be by R. Stahl, or MTL.

B. Intrinsic safety barriers shall be used for float signal, thermal switch, and moisture sensor circuits.

2.11 CIRCUIT BREAKERS

A. As specified on DRAWINGS.

B. Mechanical Interlocks – Furnish externally mounted mechanical interlocks as indicated on the DRAWINGS.

2.12 PHASE MONITORING RELAY

A. Provide phase monitoring relay having 10,000-volt transient protection to protect against single-phase voltage and incorrect phase rotation. Phase monitors shall be as specified on DRAWINGS. Phase Monitoring Relay should be located on MDP (Main Distribution Panel), contact relays should be wired to control panel terminals as per DRAWINGS.

2.13 CONDUCTORS

A. General – The use of a manufacturer's name and model or catalog number is for establishing the standard of quality and general configuration desired only. Products of other manufacturers will be considered in accordance with the General Conditions.

B. Conductors

1. As specified in Section 16120 "Conductors",
2. Tag control conductors with an identification system consisting of the terminal numbers of the major equipment and instruments as indicated on the wiring diagrams furnished with the equipment.

2.14 LINE REACTORS

A. Provide line reactors ahead of pump drives when power quality is suspect or when harmonic distortions are introduced.

1. Whenever variable frequency drives are used

B. Line reactors shall match the specific pump supplied.

C. Line reactors shall be as shown on DRAWINGS.

2.15 SPARE PARTS

A. General

1. For the pump station, provide the following spare parts for the lift station control cabinet in addition to other manufacturer recommended spare parts:
   a. One relay and base.
   b. One phase monitor.
   c. One of each size control fuse.
   d. One pump control module (PLC) furnished for each pump station per Paragraph 2.02(20)(d).
   e. One OIP

PART 3 - EXECUTION

3.01 INSTALLATION OF CONTROL PANEL

A. The control panel is a NEMA 4X, steel gray painted, ventilated enclosure. Location shall be as shown on the DRAWINGS.

B. All conduits shall enter the control panel from the bottom. Where split seal-offs are used with PVC coated conduits, remove the coating from the conduit section where the seal-off will be mounted. After mounting, re-coat the conduit and the seal-off using the manufacturers recommended kit.

C. Field panel and concrete slab to be able to withstand 140 mph wind loading. Provide mounting to slab in accordance with manufacturers recommendations.

D. Stub 2-inch conduit 5 feet into unpaved area, cap, and identify location on Record Drawings.

E. Bond panel(s) to grounding loops and comply with the provisions of Section 16450, Grounding.

3.02 TEST AND ACCEPTANCE PROCEDURE FOR THE CONTROL PANEL

CITY personnel shall be responsible for programming and testing PLC, Operator Interface panel and any instrumentation located inside the Pump Control Panel. All other instrumentation outside the Pump Control panel shall be programmed or configured by the CONTRACTOR'S or the CONTRACTOR representative(s).

The Pump Control Panel MANUFACTURER shall schedule a factory acceptance test for the control

panel with the CITY. Testing will be comprised of functionality, workmanship, and ability of the CONTRACTOR to build the panel following the City Standard Drawings and Schematics. During this test, the CITY representative(s) will load the PLC program, and test the functionality of the panel.

During testing and evaluation, any punch list items must be resolved before product will be accepted and delivered to the job site. If the unit fails the CITY testing, the Pump Control Panel MANUFACTURER shall make any repairs necessary to make the unit functional. The unit will then be re-tested by the CITY.

The CITY will not pay for or be liable for any costs associated with the failed unit. It will be the Pump Control Panel MANUFACTURER's responsibility to make any necessary changes at their facility and schedule the panel to be re-tested at no additional cost to the CITY.

CONTRACTOR shall coordinate field acceptance test and testing with the CITY, Pump MANUFACTURER, Pump Control Panel MANUFACTURER, and VFD MANUFACTURER.

END OF SECTION

RADISE International, L.C.

Geotechnical Engineering Services Report

City of Fort Lauderdale
Phase II - Las Olas Boulevard Force Main Replacement & Modifications to Pump Station D-38
Broward County, Florida

Submission Date: September 26, 2018

Prepared by:
RADISE International, L.C.
4152 W. Blue Heron Boulevard, Suite 1114
Riviera Beach, Florida 33404

RADISE INTERNATIONAL

September 26, 2018

Hazen and Sawyer
4000 Hollywood Blvd, Suite 750N,
Hollywood, FL 33021

Attn.: Ms. Jennifer McMahon, PE | Senior Associate
Phone: 954 987-0066
Email: jmcmahon@hazenandsawyer.com

RE: Geotechnical Engineering Services Report
City of Ft. Lauderdale – Phase II Las Olas Boulevard Force Main Replacement & Modifications to Pump Station D-38
Broward County, Florida
RADISE Project No: 180818

Dear Ms. McMahon,

RADISE International, LC (RADISE) is pleased to submit this Geotechnical Engineering Services Report for the above referenced project. The services were performed in general accordance with our proposal dated July 10, 2018 and Executed Professional Services Agreement dated August 22, 2018.

We appreciate the opportunity to be of service to Hazen and Sawyer on this project. Should you have any questions regarding the report, or if we can be of further assistance as this project develops, please contact us at (561) 841-0103.

Sincerely,
RADISE International, LC
Florida Certificate of Authorization No.8901

Khaled

Khaled Abdelli
Project Engineer

ANDREW JOSEPH NIXON
LICENSE
No. 71458
10/18/18
STATE OF FLORIDA
PROFESSIONAL ENGINEER

Andrew Nixon, P.E.
Senior Project Engineer/Operations Manager
Florida Registration No. 71458

TABLE OF CONTENTS

1.0 INTRODUCTION

This report has been prepared to aid in the design of the improvements to the City of Fort Lauderdale Phase II Las Olas Boulevard Force Main Replacement and Modifications to Pump Station D-38 project. The project site is at the general location shown on the attached *Vicinity Map*, Sheet 1.

The primary purpose of the geotechnical drilling and laboratory testing services was to determine the subsurface conditions, including stratigraphy and some of the physical properties of the soils underlying the project site in the general area of the planned construction. This report includes geotechnical exploration data, groundwater information, laboratory results and general recommendations for the proposed construction, and other site-specific information that may affect construction and earthwork operations for the proposed project.

The recommendations presented in this report are based upon our interpretation of the subsurface information revealed by the performance of Standard Penetration Test (SPT) soil borings. The report does not reflect variations in subsurface conditions that may exist within the project site. Variations in soil and groundwater conditions should be expected, the nature and extent of which might not become evident until construction is undertaken. If variations are encountered, and/or the scope of the project altered, we should be consulted for additional recommendations.

2.0 PROJECT DESCRIPTION

The Phase II Las Olas Boulevard Force Main Replacement and Modifications to Pump Station D-38 project is located in Fort Lauderdale, Florida. It is our understanding that the project includes connecting Pump Station D-37 on Lido Drive to the newly installed sewer main that crosses under the Intracoastal Waterway. This will involve the installation of approximately 3,100 linear feet of 16-inch high density polyethylene (HDPE) force main under Las Olas Boulevard using horizontal directional drilling methods. Lift Station D-38 will also be connected to this new force main.

Should any of the above information or reiterated statements made by RADISE be inconsistent with the planned construction, we request that you contact us promptly to allow us to make any necessary modifications to the recommendations in this report.

3.0 SCOPE OF WORK

RADISE performed the following services in accordance with the proposed scope of work:

1. RADISE conducted a site visit to field mark the planned borings and observe existing site conditions.

2. RADISE contacted Sunshine 811 to clear the field location of the borings and to identify the locations of underground utilities in the general area adjacent to the borings, as per Florida

Statutes. Clearance of underground utilities at the borings and test locations were completed before the performance of the field investigational activities.

3. RADISE mobilized Maintenance of Traffic (MOT) equipment and signage for work required along the roadway and closure of a traffic lane throughout the field drilling operations for traffic control and public safety.

4. RADISE mobilized a truck-mounted drilling rig and coring equipment to the project site and performed the following:

    - Performed seven (7) SPT borings to depths of 50 feet and four (4) SPT borings to depths of 10 feet below the existing ground surface. The approximate boring locations are depicted on the attached *Boring Location Plan*, Sheet 2.
    - The groundwater levels encountered in the SPT borings at the time of drilling were measured and recorded. The boreholes were then backfilled with cement grout following completion of the drilling operations. The borings performed through the existing pavement were patched with asphalt "cold patch", which was placed and compacted within the portion of the holes at least as thick as the surrounding asphalt pavement thickness. The top of the asphalt patch was finished flush with the pavement surface upon completion.

5. RADISE initially visually classified the collected soil samples using the Unified Soil Classification System (USCS) in general accordance with the visual-manual method of ASTM D 2488.

6. A RADISE Geotechnical Engineer inspected the secured samples in the laboratory, and assigned and performed a limited program of laboratory testing for soil index properties to assist in the final classification of the soils for engineering purposes per ASTM D 2487.

7. RADISE prepared this Geotechnical Engineering Services Report which includes, but is not necessarily limited to:

    - The results of the field exploration, and the laboratory testing programs.
    - Detailed graphical logs of the soil borings showing the soil conditions encountered at the locations investigated including the results of the SPT tests, groundwater levels recorded, and soil classifications.
    - Identify possible constructability concerns, allowable soil bearing pressures, soil parameters, and foundation recommendations for all proposed structures.

This report also includes our geotechnical recommendations for site preparation, and other construction related information considered necessary to develop and construct the project from a geotechnical perspective.

4.0 FIELD EXPLORATION

RADISE personnel visited the project site prior to drilling to observe the locations of the planned SPT borings. Sunshine State One-Call was then contacted for field location of underground utilities in the area of the planned SPT boring and pavement core locations as per Florida Statutes. During this work phase, MOT was used to protect our field crew, equipment and the public.

4.1 SOIL BORINGS

RADISE mobilized a truck-mounted drilling rig to the site and drilled seven (7) SPT borings to depths of 50 feet and four (4) SPT borings to depths of 10 feet below the existing ground surface. The borings were performed on September 4 to 6, 2018 at the locations are depicted on the attached *Boring Location Plan*, Sheet 2. We estimate that the actual boring locations are within approximately 20 feet of the locations shown in the attached *Boring Location Plan*, Sheet 2. The Latitude and Longitude coordinates of the boring locations were measured in the field by RADISE personnel using a hand-held GPS unit and are provided in the attached *Subsurface Profiles*, Sheets 3A through 3E.

The SPT borings were performed in general accordance with ASTM D 1586, "*Standard Test Method for Standard Penetration Test and Split-Barrel Sampling of Soils*". Upon retrieval of the split-spoon, soil samples were extracted and visually classified and placed in moisture proof containers for transportation to our laboratory.

4.2 GROUNDWATER MEASUREMENT

The depth at which groundwater was encountered in each SPT boring was measured at the completion of the drilling after a short stabilization period. Following the completion of the field drilling and testing activities, the SPT boreholes were backfilled with a neat cement grout. The borings performed through the existing pavement were patched with asphalt "cold patch", which was placed and compacted within the portion of the holes at least as thick as the surrounding asphalt pavement thickness. The top of the asphalt patch was finished flush with the pavement surface upon completion.

5.0 LABORATORY TESTING

5.1 SOIL INDEX TESTING

Soil samples obtained from the SPT borings were reviewed and field classifications confirmed in the laboratory by a RADISE Geotechnical Engineer using visual examination and the field boring logs. Final classifications were provided in general accordance with the Unified Soil Classification System (ASTM D 2488). Selected soil samples were tested for index properties to aid in the classification for engineering purposes (ASTM D 2487). The following laboratory tests were performed in accordance with the applicable ASTM procedures:

- Seventeen (17) Moisture Content Test (ASTM D 2216).
- Seven (7) Mechanical Grain Size Analysis (ASTM D 422).

- Six (6) Organic Content Test (ASTM D 2974).
- Four (4) Percent of Material Passing through No. 200 Test (ASTM D 1140).

A summary of laboratory test results is presented in the attached *Summary of Laboratory Test Results*, Table A-1, in Appendix A, and on the boring logs found on the attached *Subsurface Profiles*, Sheets 3A through 3E.

6.0 SUMMARY OF SUBSURFACE CONDITIONS

6.1 STRATIGRAPHY

Stratification of the explored soils is based on visual examination of the recovered soil samples, laboratory visual classification combined with associated index testing, and interpretation of the field boring logs by RADISE Geotechnical Engineer. Subsurface profiles showing the soil stratification at the SPT boring locations were developed and are presented on the attached *Subsurface Profiles***,** Sheets 3A through 3E.

In general, we encountered a surficial layer of fill material consisting of brown to dark gray fine sand, occasionally with silt, limerock, shell fragments and/or trace of organics (SP/SP-SM unified Soil Classification System) and brown limerock fill in the upper 4 to 6 feet. These upper fill materials were generally underlain by a layer of dark brown fibrous organics (PT) that extended to depths of approximately 8 feet followed by a layer of silty sand (SM) or silt with sand (ML) in borings DB-4 through DB-7 to depths of 8 to 10 feet deep. Below this layer, a tan to light brown fragmented limestone with varying amounts of silt and sand was encountered and extends to depths ranging approximately from 28 to 48 feet. This layer is underlain by predominantly light brown to gray fine sands with occasional limestone fragments (SP/SP-SM) that extended to the boring termination depth of 50 feet deep below the existing ground surface.

The general soil layers and types are described in the following Table 1:

Table 1 – Soil Layer Descriptions

Stratum No.	Description	USCS Classification
1	Brown to dark gray fine sand, occasional with silt, limerock shell fragments, and /or trace of organics (Fill material)	SP/SP-SM
2	Brown limerock, with and sand silt (Fill Material)	GP-GM
3	Dark brown, fibrous organics/Peat	PT
4	Light brown, silty sand	SM
5	Light brown silt, with sand	ML
6	Tan to light brown, fragmented limestone	-
7	Light brown to gray fine sands, trace silt, occasional limestone fragments	SP/SP-SM

Stratification lines shown on the boring profiles represent approximate boundaries between soil types, but the actual transition between layers may be gradual or less abrupt. Additionally, soil and groundwater conditions will vary within project site location, thus variations in soil and groundwater conditions should be expected, the nature and extent of which might not become evident until construction is undertaken. If variations are encountered, and/or the scope of the project altered, RADISE should be consulted for additional recommendations.

6.2 GROUNDWATER LEVEL

The depth to the groundwater was measured from the existing ground surface in each of the performed SPT borings and is plotted adjacent to the soil profiles on the attached *Subsurface Profiles*, Sheets 3A through 3E.

On September 4-6, 2018, at the time of our drilling the groundwater level varied between 2.25 to 4.5 feet below the existing ground surface. It should be noted that groundwater levels will fluctuate with the seasons, variations of precipitation and tidal fluctuations of the adjacent waterways. It is recommended that the seasonal high groundwater table levels along the various project infrastructure alignments, be based on the normal high tide water levels of the adjacent waterways.

7.0 RECOMMENDATIONS AND DISCUSSIONS

The following sections present our conclusions and recommendations for the proposed construction. The recommendations discussed herein are based on our interpretation and understanding of the project's needs and site conditions. If subsurface conditions encountered during the construction differ from those disclosed by the borings, we should be notified immediately, so that we can review and modify as necessary, our recommendations included herein.

The shallow sands encountered in a majority of the borings performed for this study will be suitable for the proposed construction; however, the presence of the underlying fibrous organics will be problematic to the installation of underground utilities especially when the inverts of such systems are founded in the organic layers. Such organics have very low shear strengths and will not support significant excavations made within or through them. As such, it is anticipated that the significant use of sliding trench boxes/shoring/sheet piling will be required to install infrastructure systems in this area. The granular sand nature and minimal amounts of silts (i.e. 0.4 to 0.12%) within these upper sands, should not be problematic. However, sands with silt content amounts much over 12% will not likely be suitable for structures and pipelines bearing on that material.

Lift station structures are anticipated to be constructed well into the underlying sands and limestones and below the organic soils. Uplift flotation resistance may be a concern for their design and construction. The buried organics encountered are expected to have little effect on the stability of the wet well structures in the ground since the bottom of the wet wells will be bearing in the sand and limestone layers. Sheet piling will likely be required to support excavations for these deep structures.

7.1 LIFT STATION FOUNDATION RECOMMENDATIONS

Based on the geotechnical exploration it is our opinion that the site is suitable for the planned modifications to the lift station D-38. The proposed structures may be supported on a mat foundation bearing on the limestone below the organic soils.

Following the in-situ foundation preparation recommendations below, the proposed structure foundations may be designed using a net allowable soil bearing pressure of up to 2,000 pounds per square foot (psf) bearing within the prepared subgrade conditions. The net bearing pressure is defined as the soil bearing pressure at the foundation bearing level in excess of the natural overburden pressure at that level. To verify suitable bearing, we recommend that the foundation excavation subgrade be checked by a geotechnical engineer just prior to structure installation or construction. The excavation bottom should be kept as dry during construction.

Resistance to lateral loads can be derived from 1) passive pressure acting on the sides of the embedded structures and foundations, and 2) lateral resistance along the base of the foundations. Lateral resistance derived from friction between the soil and the bases of the footings should be calculated based on a friction factor of 0.35 times the base contact bearing pressure. Passive and active earth pressure resistances for embedded structures may use values provided in the prior Tables 2 through 8 with the exception that the upper foot of soil should be neglected, unless it is confined by a slab or pavement. Passive resistance on the sides of the foundations should be ignored if these soils can be hypothetically washed away during a hurricane storm event.

A subgrade modulus of 250 psi/in may be used in the design of a mat/raft foundation provided that the subgrade and subsequent engineered granular fill is prepared as described below. A 6-inch leveling layer of clean (less than 5% passing a #200 sieve) granular fill is recommended to be placed directly below slab-on-grade floors where appropriate. The granular fill should be compacted until densities of at least 95% of the maximum dry density as determined by ASTM D1557, the Modified Proctor method. Based on our assumption of a structure supported on a shallow footing or mat foundation system, the total settlement should be less than 1.0 inches, and differential settlements should be less than 0.50 inches.

7.2 HORIZONTAL DIRECTIONALLY DRILLED PIPELINES

It is our understanding that it is desired to install utilities using Horizontal Directionally Drilled (HDD) methods. HDD pipeline installation is a suitable technique for smaller diameter pipelines anticipated for this project; however, the design team and specialty contractor should pay special attention to the presence of relatively shallow porous limestone. Please note that the directional equipment setup, supporting facilities and pipe layout requirements would present significant coordination challenges to such installations. HDD pipeline installations require an adequate area be available for the HDD drilling and slurry processing equipment setup.

The primary concern with HDD pipeline construction installation technics is the potential for loss of ground into the pipeline installation excavations. Such loss of ground can result in settlement of the ground above the pipeline therein adversely impacting subgrade support and the pavement and structures bearing on the subgrade.

The HDD pipeline installation process requires construction of an entrance and exit receiving pits. These pits are commonly sized based on the size of the pipeline and drill fluid circulation volume requirements needed for its installation. The entry and receiving pits allow the HDD drilling fluid to be contained, collected and reclaimed during the drilling process to reduce costs, prevent waste and limit environmental impacts associated with the drilling fluid usage. Given the nature of the upper sandy soil encountered at the site, it is anticipated that entrance and exit pits would be capable of being excavated as open pits with fairly steep but shallow 2V:1H side slopes and without the need for shoring retention systems. For the design of retention systems for the entrance and exit pits, the soil parameters in Section 7.3, Tables 2 through 8 based on the boring log profiles, can be used by the excavation support structural designer.

HDD pipeline profiles are a series of long radius arcs starting at entry and exit locations with straight horizontal tangents between same which pass beneath the infrastructure system to be avoided. Entry angles are typically between 8 and 16 degrees and exit angles typically vary from 5 to 12 degrees. The design of the pipeline material and thickness of the pipe must be designed to accommodate the anticipated tension stress to be imposed on the pipeline during the pullback process.

The HDD installation begins by boring a small directionally guided horizontal hole (pilot hole) along the proposed design alignment and under the crossing obstacle (e.g. a canal, river, roadway, railroad etc.). The pilot hole is drilled with a heavy bentonite slurry with a continuous string of steel drill rod affixed to a directionally guided capable drill head and bit. When the bore head and rod emerge on the opposite side of the crossing, a special cutter, called a back-reamer is attached and pulled back through the pilot hole leaving an enlarge hole filled with slurry. The back-reamer

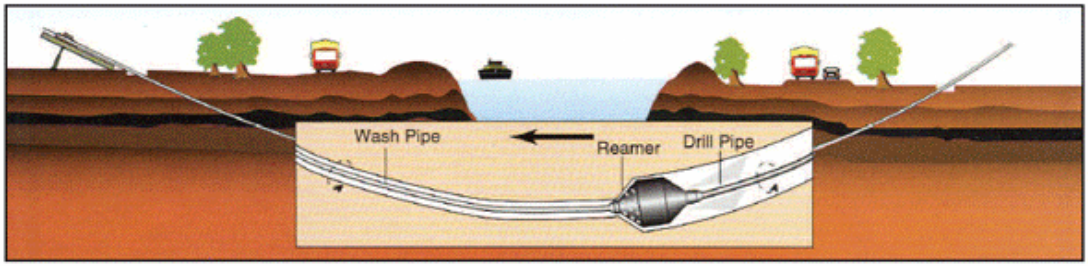

PRE-REAMING

bores out and enlarges the pilot hole so that the design pipeline can be pulled through. Typically, the enlarged hole is some 40% (+/-) larger than the intended design pipe installation. The pipe is usually assembled pulled through from the side of the crossing opposite the drill rig after the final enlargement and cleanout passes of the reaming tool. Once installed, the HDD process leaves a borehole containing the design pipeline surrounded by remnant bentonite drilling slurry.

From an environmental perspective, primary site impacts are associated with the land use requirements needed to drill and stage the drill and slurry processing equipment and piping etc. needed for the crossing.

Space requirements for HDD rigs and entry areas are expected to be in the range of 20 feet wide by 20 feet long for the smaller diameter pipeline installations proposed for this project.

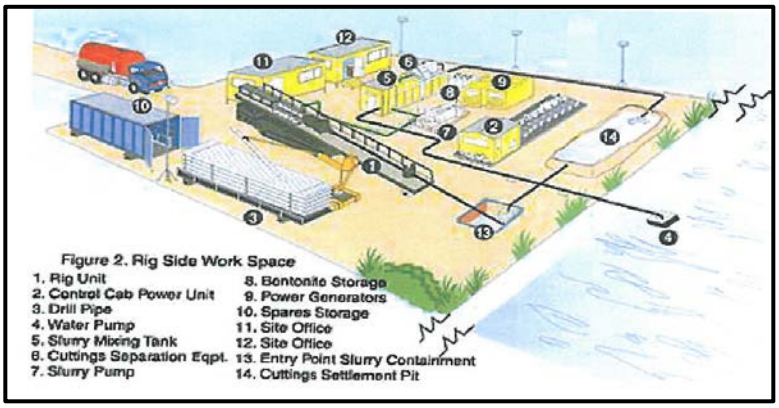

On the pipe exit side of the crossing, adequate space should be provided to allow fusing and joining the carrier pipe. It is desirable to provide sufficient pipeline assembly and staging area around and away from the exit pit such that the pipe can be assembled and then pulled back in one continuous operation without having to stop pullback to fuse or weld piping. However, in occupied areas, this may not be possible. A schematic of a typical HDD drilling exit site is shown above.

A primary design and construction consideration during HDD pipeline installation, is the inadvertent surface release (i.e. frac-outs) of drilling mud along the HDD alignment. This reportedly can be caused by a variety of reasons such as; excess slurry fluid pressures in the drilled hole exceeding the soil's weight and strength to contain it, pre-existing fractures or other openings in the soil or rock, or, where ground has been previously disturbed (previous excavations, piling, etc.). Drilling fluid pressures should not exceed that which can be supported by the overburden (soil) pressure which is function of the borehole cover. Typical installation criteria limits drilling fluid pressures to a maximum of 10 psi. Use of pressures above this value would require analysis of the existing conditions by a qualified registered professional engineer in the state of Florida. For environmental impact considerations, frac-out containment and mitigation plans will need to be developed and permitted and effected during construction.

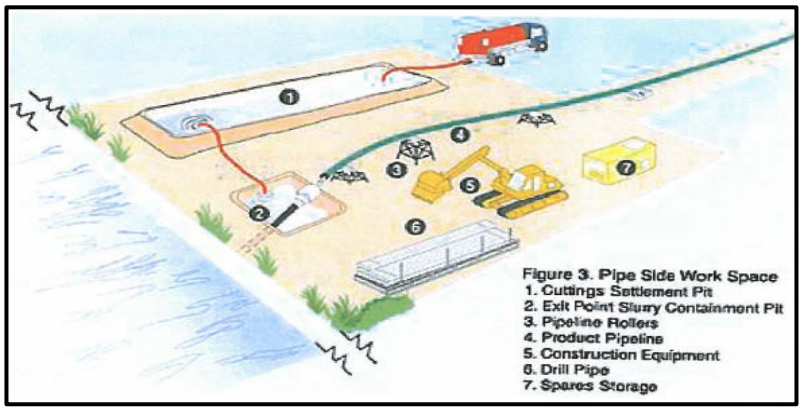

7.3 SOIL DESIGN PARAMETERS

Construction of the proposed improvements will necessitate installation of utilities and structures well below the existing ground surface. The recommended soil design parameters to be used for embedded structures or excavation support where needed, with respect to strata delineated in the borings, are presented in the following Tables 2 through 8 for the respective borings and utility systems to be installed in the general areas of the borings.

Table 2 – Recommended Soil Parameters for Boring DB-1

Depth (ft. – ft.)	Average N_{AUTO}	Average N_{ES}	Recommended Values			Earth Pressure Coefficients		
			Friction Angle (Degrees)	Total Unit Weight (pcf)	Submerged Unit Weight (pcf)	Active, Ka	Passive, Kp	At rest, K_O
0 - 4	11	13	31	110	48	0.320	3.124	0.485
4 - 10	4	5	29	106	44	0.347	2.882	0.515
10 - 40	14	18	32	112	50	0.307	3.255	0.470
40 - 45	50	62	44	136	74	0.180	5.550	0.305
45 - 50	19	24	34	116	54	0.283	3.537	0.441

Table 3 – Recommended Soil Parameters for Boring DB-2

Depth (ft. – ft.)	Average N_{AUTO}	Average N_{ES}	Recommended Values			Earth Pressure Coefficients		
			Friction Angle (Degrees)	Total Unit Weight (pcf)	Submerged Unit Weight (pcf)	Active, Ka	Passive, Kp	At rest, K_O
0 - 6	8	10	30	108	46	0.333	3.000	0.500
6 - 10	3	4	29	106	44	0.347	2.882	0.515
10 - 35	12	15	32	112	50	0.307	3.255	0.470
35 - 45	50	62	40	136	74	0.180	5.550	0.305
45 - 50	13	16	32	112	50	0.307	3.255	0.470

Table 4 – Recommended Soil Parameters for Boring DB-3

Depth (ft. – ft.)	Average N_{AUTO}	Average N_{ES}	Recommended Values			Earth Pressure Coefficients		
			Friction Angle (Degrees)	Total Unit Weight (pcf)	Submerged Unit Weight (pcf)	Active, Ka	Passive, Kp	At rest, K_O
0 - 4	12	14	32	112	50	0.307	3.255	0.470
4 - 15	8	10	31	110	48	0.320	3.124	0.485
15 - 40	12	14	32	112	50	0.307	3.255	0.470
40 - 45	50	62	40	128	66	0.217	4.599	0.357
45 - 50	26	32	40	128	66	0.217	4.599	0.357

Table 5 – Recommended Soil Parameters for Boring DB-4

Depth (ft. – ft.)	Average N_{AUTO}	Average N_{ES}	Recommended Values			Earth Pressure Coefficients		
			Friction Angle (Degrees)	Total Unit Weight (pcf)	Submerged Unit Weight (pcf)	Active, Ka	Passive, Kp	At rest, K_O
0 - 15	5	6	29	106	44	0.347	2.882	0.515
15 - 25	14	17	32	112	50	0.307	3.255	0.470
25 - 30	7	9	30	108	46	0.333	3.000	0.500
30 - 35	21	26	40	128	66	0.217	4.599	0.357
35 - 40	50	62	40	128	66	0.217	4.599	0.357
40 - 50	9	11	31	110	48	0.320	3.124	0.485

Table 6 – Recommended Soil Parameters for Boring DB-5

Depth (ft. – ft.)	Average N_{AUTO}	Average N_{ES}	Recommended Values			Earth Pressure Coefficients		
			Friction Angle (Degrees)	Total Unit Weight (pcf)	Submerged Unit Weight (pcf)	Active, Ka	Passive, Kp	At rest, K_O
0 - 4	10	12	30	108	46	0.333	3.000	0.500
4 - 10	4	5	29	106	44	0.347	2.882	0.515
10 - 15	13	16	32	112	50	0.307	3.255	0.470
15 - 30	4	5	29	106	44	0.347	2.882	0.515
30 - 35	13	16	32	112	50	0.307	3.255	0.470
35 - 40	50	62	40	128	66	0.217	4.599	0.357

Depth (ft. – ft.)	Average N_{AUTO}	Average N_{ES}	Recommended Values			Earth Pressure Coefficients		
			Friction Angle (Degrees)	Total Unit Weight (pcf)	Submerged Unit Weight (pcf)	Active, Ka	Passive, Kp	At rest, K_O
40 - 50	14	17	32	112	50	0.307	3.255	0.470

Table 7 – Recommended Soil Parameters for Boring DB-6

Depth (ft. – ft.)	Average N_{AUTO}	Average N_{ES}	Recommended Values			Earth Pressure Coefficients		
			Friction Angle (Degrees)	Total Unit Weight (pcf)	Submerged Unit Weight (pcf)	Active, Ka	Passive, Kp	At rest, K_O
0 - 4	16	19	33	114	52	0.295	3.392	0.455
4 - 10	4	5	29	106	44	0.347	2.882	0.515
10 - 20	14	17	32	112	50	0.307	3.255	0.470
20 - 30	2	2	29	106	44	0.347	2.882	0.515
30 - 35	14	17	32	112	50	0.307	3.255	0.470
35 - 40	50	62	40	128	66	0.217	4.599	0.357
40 - 50	14	17	32	112	50	0.307	3.255	0.470

Table 8 – Recommended Soil Parameters for Boring DB-7

Depth (ft. – ft.)	Average N_{AUTO}	Average N_{ES}	Recommended Values			Earth Pressure Coefficients		
			Friction Angle (Degrees)	Total Unit Weight (pcf)	Submerged Unit Weight (pcf)	Active, Ka	Passive, Kp	At rest, K_O
0 - 4	14	17	32	112	50	0.307	3.255	0.470
4 - 10	3	4	29	106	44	0.347	2.882	0.515
10 - 20	31	38	38	124	62	0.238	4.204	0.384
20 - 30	2	2	29	106	44	0.347	2.882	0.515
30 - 35	24	30	35	118	56	0.271	3.690	0.426
35 - 40	50	62	40	128	66	0.217	4.599	0.357
40 - 50	13	16	32	112	50	0.307	3.255	0.470

7.4 PARTIAL REMOVAL OF ORGANIC SOILS

If any pipes or manhole structures are founded in or within 2 feet of the organic soils, we recommend that the pipe alignments and manhole structures be over excavated approximately 24 inches under the pipe/manhole and 12 inches on each side of the pipe/manhole to remove the organic soils. The excavation is to be maintained dewatered, if needed, to allow the placement of the given appurtenance and the compaction of the backfill. The resulting excavation may then be backfilled with clean sand or gravel (FDOT No. 57 coarse aggregate) placed in uniform layers, not exceeding 12 inches in loose thickness, individually compacted with a heavy vibratory rammer or vibratory plate compactor; see Sections 7.9 and 7.10.

Consideration can be given to the use of Mirafi X-Series geotextile (or equivalent from the FDOT Index 501) between the organics and backfill to help minimize intrusion of gravel into the organics but, it is desirable to have the upper organics as dry as possible when the gravel is placed.

7.5 CLEARING AND GRUBBING

If relevant, any clearing and grubbing should include the complete removal and disposal of all grass, associated root systems, topsoil, rubbish, debris, demolished material, pavement and all other obstructions resting on or protruding through the surface of the existing ground and the surface of excavated areas.

7.6 UNDERGROUND UTILITIES AND STRUCTURES

Existing underground utilities and structures are likely to be present in the proposed construction area. These utilities need to be properly identified and located, removed and/or relocated as necessary by design to construct the project. The excavation bottoms of any relocated utilities should be cleaned of any undesirable materials prior to placing any engineered backfill.

Site preparation, excavation, and backfilling for new utilities or re-aligned utilities should follow all the applicable recommendations of this report.

7.7 EXCAVATIONS

The Contractor shall be solely responsible for making excavations in a safe manner and provide appropriate measures to safely retain side slopes to ensure that persons working in or near the excavation are protected from injury. Any temporary or permanent structural retaining walls and systems required for excavation support, shall be designed and signed/sealed by a professional Structural Engineer registered in the State of Florida.

The granular soil deposits encountered can be readily excavated with standard construction equipment. All excavations should be made in accordance with applicable State, Federal and OSHA requirements. The construction contractor is solely responsible for excavation safety. Most of the soils encountered in the SPT borings generally consist of relatively sands. OSHA 29 CFR part 1926 (Subpart P, Excavations) defines such soils as Type C soils. As such, temporary side slopes in fully dewatered excavations could be made at a 1-1/2H:1V inclination or flatter.

Adjustment to this inclination and/or the use of sheeting, shoring or trench boxes should be evaluated by the Contractor if other soil strata are encountered.

7.8 DEWATERING

At the time of drilling of the SPT borings (i.e. September 2018), the depth of the groundwater table was encountered and varied approximately between 2.25 and 4.50 feet below the existing grade surface. Therefore, construction of the projects underground utility systems approaching or deeper than this depth will likely require groundwater lowering and control of groundwater seepage into excavations made for utility and lift station installations and/or removal depending on the depth of the excavations.

Dewatering of the excavations for construction may necessitate the use of sumps, wells, well points or combinations thereof. Control of groundwater should be accomplished in a manner that preserves the integrity of the foundation bearing materials and does not cause instability of the excavation sidewalls or blowup of the bottoms of the excavations. The dewatering system employed should be capable of maintaining a pre-drained groundwater surface a minimum of 12 inches below the excavation bottoms. Dewatering measures should be controlled so that the groundwater is not lowered beneath any nearby structure. Dewatering of the organic soils will cause an increase in unit weight of the soils and a reduction in volume, resulting in primary consolidation settlement.

7.9 PIPE BEDDING

Most of the shallow sands encountered in the SPT borings are expected to provide good support for the proposed small water mains without the need for bedding when the invert elevations are at least 24 inches above the groundwater level (natural or pre-drained by dewatering). Where organics or other deleterious materials are encountered at or within 2 feet below the pipe invert, such soils shall be considered compressible and unsuitable for pipe support. These soils should be over-excavated and replaced with compacted clean sand or FDOT No. 57 coarse aggregate or an approved equivalent. If FDOT No. 57 stone or an approved equivalent is utilized, such stone material will need to be encapsulated and/or covered with a geosynthetic fabric especially beneath pavement areas. Such fabric material is needed to prevent granular excavation soils and trench backfill from penetrating/settling into the void volumes of the open stone resulting in loss of ground and eventual settlement of the ground surface above the piping.

The bedding surface should be uniformly compacted to a density of not less than 95 percent of the maximum dry density in accordance with ASTM D 1557, the Modified Proctor Method.

7.10 TRENCH BACKFILL AND COMPACTION

Soils used to backfill utility excavations and structures should consist of relatively clean sands having no materials larger than two inches in size, not more than ten (10) percent passing the U.S. Standard No. 200 sieve. Such backfill shall not contain more than three (3) percent organics or other deleterious materials by weight in accordance with Section 125 of the FDOT Standard Specifications for Road and Bridge Construction. Some of the shallow sands encountered at the

site appear to meet these criteria and are suitable for reuse as backfill once inspected, tested and approved.

Granular backfill should be placed at a moisture content within three (3) percent of its ASTM D 1557 determined optimum moisture and in level lifts whose thickness does not exceed eight (8) inches. Each fill lift should be stable, unyielding and uniformly compacted to at least ninety-five (95) percent of the maximum dry density in accordance with ASTM D 1557, the Modified Proctor Method. We recommend the use of only relatively light, hand-held compaction equipment in the densification operations around utilities to limit the potential damage to the pipelines and buried structures.

7.11 SITE PREPARATION

The site preparation for any roadway modifications should consist of necessary clearing and grubbing in general accordance with Section 110 of the FDOT Standard Specifications for Road and Bridge Construction or any similar City/County standard design criteria applicable to the project. Any topsoil or other deleterious material encountered in proposed pavement areas, will need to be stripped, removed and replaced with embankment or roadway fill. If buried organic soils, debris or other unsuitable materials are encountered during the construction, which are or are not disclosed by the borings, they should be removed and replaced with a backfill material as described in following sections.

In general, the shallow sands are satisfactory for use in the subgrade and embankment when utilized in general accordance with FDOT Standard Index 505 or any similar City/County standard design criteria applicable to the project. Soils exposed at the stripped grades will require moisture conditioning to near the optimum moisture content prior to initiating the densification operations. In residential areas, the use of such heavy vibratory compaction equipment may prove problematic and disruptive or even damaging to existing/adjacent home owner's properties. In such cases, the compaction will need to be performed and achieved with lighter weight, less vibration generation capable equipment such as walk behind (e.g. Whacker) ground pounder or small vibratory rolling equipment.

Each section of the stripped grade should be subjected to multiple, overlapping coverages of the compactor as it operates at a travel speed of no more than 1.5 miles per hour (normal walking speed). Compaction should be continued until no further settlement can be visually discerned at the ground surface. The densified areas should include a 3-foot perimeter along proposed new pavement areas.

Density control should be exercised for the exposed subgrade for any roadway repairs. Soils in this interval should be compacted to not less than ninety-five (95) percent of the maximum dry density in accordance with ASTM D 1557, the Modified Proctor Method. Subgrade soils that noticeably pump or deflect under the weight of the passing compaction equipment, could indicate the presence of soft, weak, overly saturated soils or compressible and loose soil zones existing in the near surface subgrade within the depth of influence of the roller. In such cases, those areas should be remedied by appropriate means to be determined by the inspecting field representative in consultation with representatives of the design team.

7.12 SELECT FILL, PLACEMENT & COMPACTION

Site structural and pavement embankment fill and backfill required for construction should consist of clean, granular materials that are free of debris, cinders, combustibles and organic matter. The fines content (i.e., material passing U.S. Standard No. 200 sieve) should not be more than ten (10) percent by weight, no particle sizes larger than one (1) inches in any direction and the organic content should not exceed three (3) percent by dry weight. The on-site shallow sands appear to meet the above criteria and are suitable for use as structural fill and backfill material. Organic laidened soils encountered in several of the borings soils beneath the upper sand layer, will not be suitable for use of Select Fill.

The granular fill should be placed at a moisture content within three (3) percent of its Modified Proctor (ASTM D 1557) determined optimum in level lifts whose loose thickness does not exceed twelve (12) inches. In areas where heavy equipment cannot be operated for compaction, the fill should be placed in six (6) inch thick level lifts. Each fill lift should be stable, unyielding and uniformly compacted to 95 percent of the ASTM D 1557 maximum dry density, as verified by the designated site construction inspecting representative.

Select fill soils will require moisture conditioning to near the optimum moisture content prior to initiating the densification operations. Similar to the subgrade preparation, the fill densification should normally be accomplished using a self-propelled vibratory compactor which imparts a dynamic drum force of not less than 44,000 pounds. However, in residential areas, the use of such heavy vibratory compaction equipment may prove problematic and disruptive or even damaging to existing/adjacent home owner's properties. In such cases, the compaction will need to be performed and achieved with lighter weight, less vibration generation capable equipment such as walk behind (e.g. Whacker) ground pounder or small vibratory rolling equipment.

7.13 OBSERVATION AND TESTING

It is recommended that a geotechnical engineer be retained to provide soil engineering inspection services during the construction excavation phase of the project. This is to observe compliance with the design concept, specifications and recommendations, and to allow design changes in the event subsurface conditions differ from those anticipated. In addition, an inspection and testing representative of a geotechnical engineer should be present to provide monitoring and testing of both fill and concrete placement during the construction phase of the project.

8.0 PROTECTION OF EXISTING STRUCTURES

Ground vibrations induced primarily by soil compaction using heavy vibratory equipment or by sheet piling installations and/or any other vibratory construction activities should be monitored to assure that they do not reach levels which prove damaging to any adjacent/nearby structures. Vibration Monitoring should be performed in general accordance with FDOT "Section 108, Protection of Existing Structures" Division II Construction Details: General Construction Operations of the current FDOT Standard Specifications for Road and Bridge Construction. County code requires that vibration levels be less than 0.50 ips peak particle velocity. however,

we recommend that vibration levels on adjacent facilities should generally be maintained below a 0.25 ips peak particle velocity level.

The Contractor will need to inventory adjacent structures and determine suitable vibration impact limits for their construction activities. Additionally, we recommend that the contractor make a preconstruction inspection and documentation of structures in the vicinity of proposed work as a precautionary measure to any alleged damage claims from adjacent land owners which may arise out of the construction effort.

While any sheet piling or structural back filling compaction operations are underway, vibration monitoring should be performed. During any sheet piling operations, it may be necessary to control and vary hammer operations/energy and vibration generations to mitigate vibration transmissions to adjacent residences Heavy vibratory compaction should cease if deemed detrimental to adjacent structures. It is recommended that any heavy vibratory roller remain a minimum of seventy-five (75) feet away from existing structures. Within this identified zone, we recommend that the compactor be operating in the static mode.

9.0 REPORT LIMITATIONS

RADISE International warrants that the professional services performed and presented in this report are prepared for Hazen & Sawyer and are based upon recognized principles and practices in the discipline of geotechnical engineering at this place and point in time, and for this project site. No other warranties are expressed or implied.

This report is intended for geotechnical purposes only, and not to document or detect the presence, or absence, of any environmental conditions at the site, or to perform an environmental assessment of the site. The recommendations presented in this report are based upon our interpretation of the subsurface information revealed by the test borings. The report does not reflect variations in subsurface conditions that may beyond the boring. Variations in soil and groundwater conditions should be expected, the nature and extent of which might not become evident until construction is undertaken.

-oOo-

RADISE appreciates the opportunity to be of service to you. Please feel free to contact us at 561.841.0103 if you have any questions or comments regarding this report.

Respectfully submitted
RADISE International, L.C.

ATTACHMENTS

SHEET 1: VICINITY MAP
SHEET 2: BORING LOCATION PLAN
SHEETS 3A-3E: SUBSURFACE PROFILES

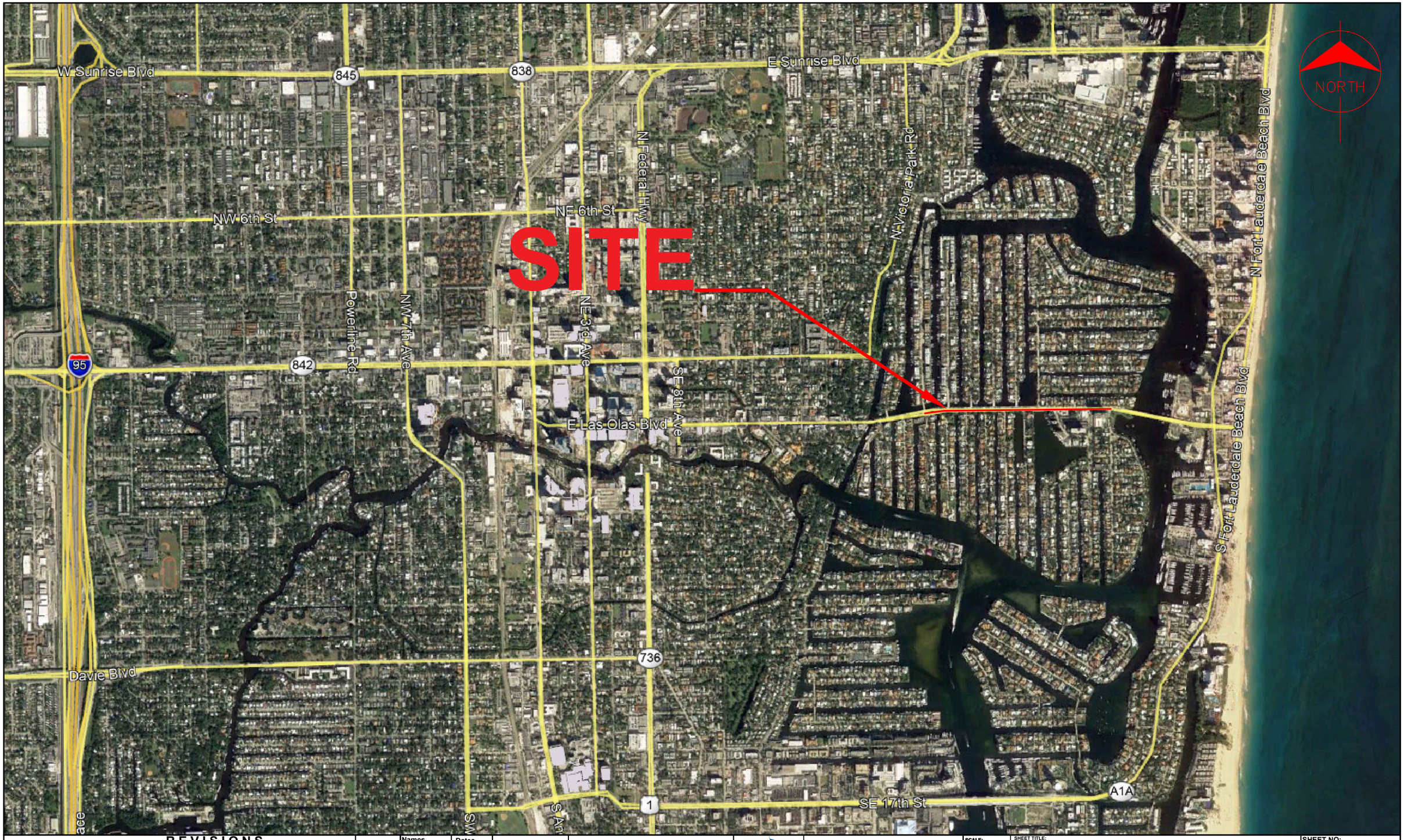

REVISIONS							Names	Dates
Date.	By	Descriptions	Date.	By	Descriptions	Drawn by	K.A.	09/11/2018
						Checked by	A.N.	09/11/2018
						Designed by	K.A.	09/11/2018
						Checked by	A.N.	09/11/2018
						Approved by	A.N.	09/11/2018

RADISE INTERNATIONAL
LICENSE NO. - 8901

RADISE International
4152 West Blue Heron Boulevard, Suite 1114
Riviera Beach, Florida. 33404
TEL 561-841-0103 FAX 561-841-0104
URL : http:// www.radise.net

CITY OF FORT LAUDERDALE

COUNTY	CLIENT
BROWARD	Hazen

SCALE: VERTICAL N.T.S.
SCALE: HORIZONTAL N.T.S.

SHEET TITLE: VICINITY MAP

PROJECT NAME: PHASE II - LAS OLAS BOULEVARD FORCE MAIN REPLACEMENT

SHEET NO: 1

RADISE PROJECT NO: 180818

CAM 19-0496
EXHIBIT 3
Page 381 of 463

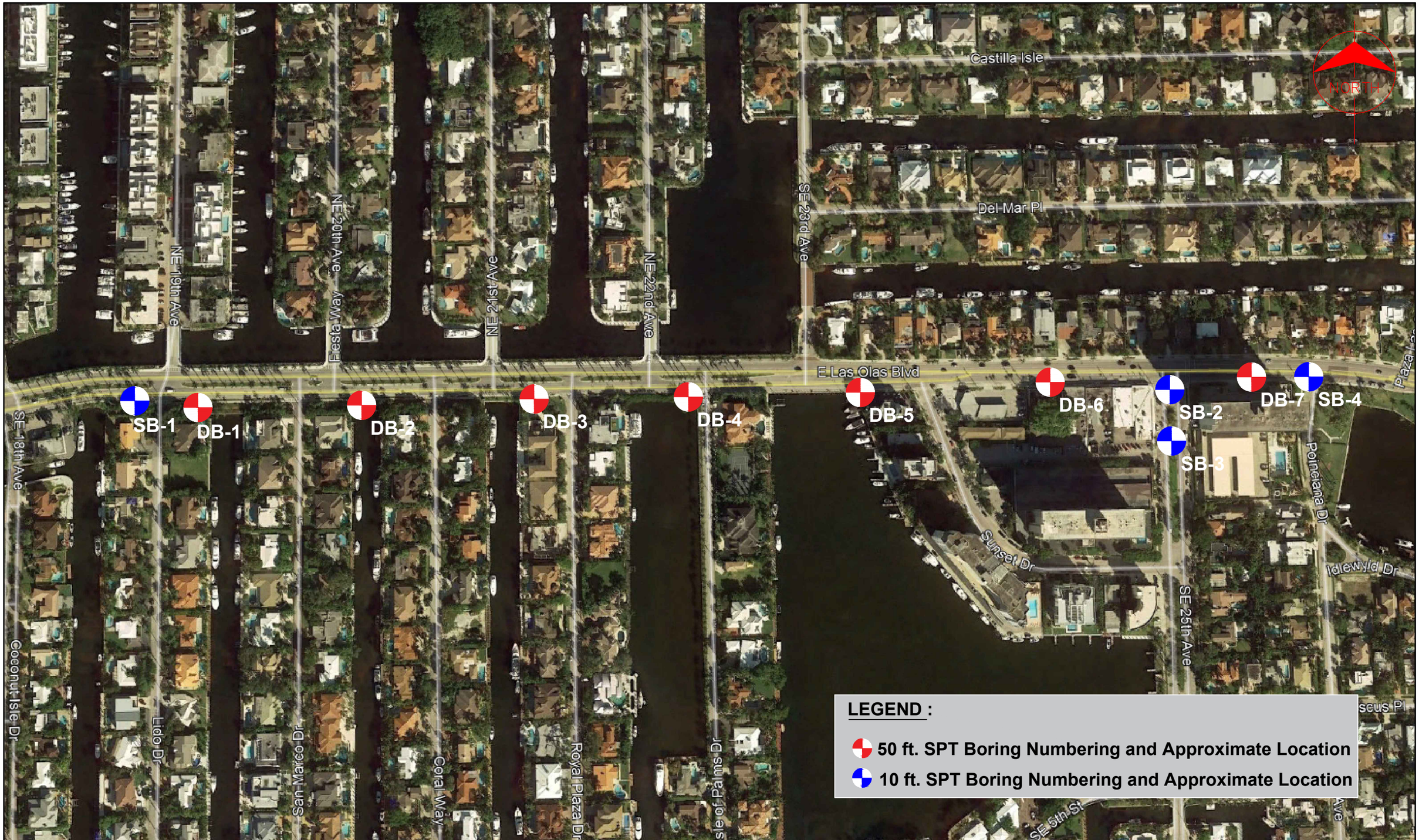

REVISIONS							Names	Dates
Date.	By	Descriptions	Date.	By	Descriptions	Drawn by	K.A.	09/11/2018
						Checked by	A.N.	09/11/2018
						Designed by	K.A.	09/11/2018
						Checked by	A.N.	09/11/2018
						Approved by	A.N.	09/11/2018

RADISE INTERNATIONAL
LICENSE NO. - 8901

RADISE International
4152 West Blue Heron Boulevard, Suite 1114
Riviera Beach, Florida. 33404
TEL 561-841-0103 FAX 561-841-0104
URL : http:// www.radise.net

CITY OF FORT LAUDERDALE

COUNTY	CLIENT
BROWARD	Hazen

SCALE: VERTICAL N.T.S.
SCALE: HORIZONTAL N.T.S.

SHEET TITLE: BORING LOCATION PLAN

PROJECT NAME: PHASE II - LAS OLAS BOULEVARD FORCE MAIN REPLACEMENT

SHEET NO: 2

RADISE PROJECT NO: CAM 19-0196 180818

EXHIBIT 3
2/13

	DB-1	DB-2
BORING NO.	DB-1	DB-2
LONGITUDE:	W -80.1203°	W -80.1192°
LATITUDE:	N 25.1199°	N 26.1199°
RIG:	CME 45	CME 45
HAMMER:	AUTO	AUTO
DRILLER:	T. FICKLING	T. FICKLING
DATE:	09/04/2018	09/04/2018

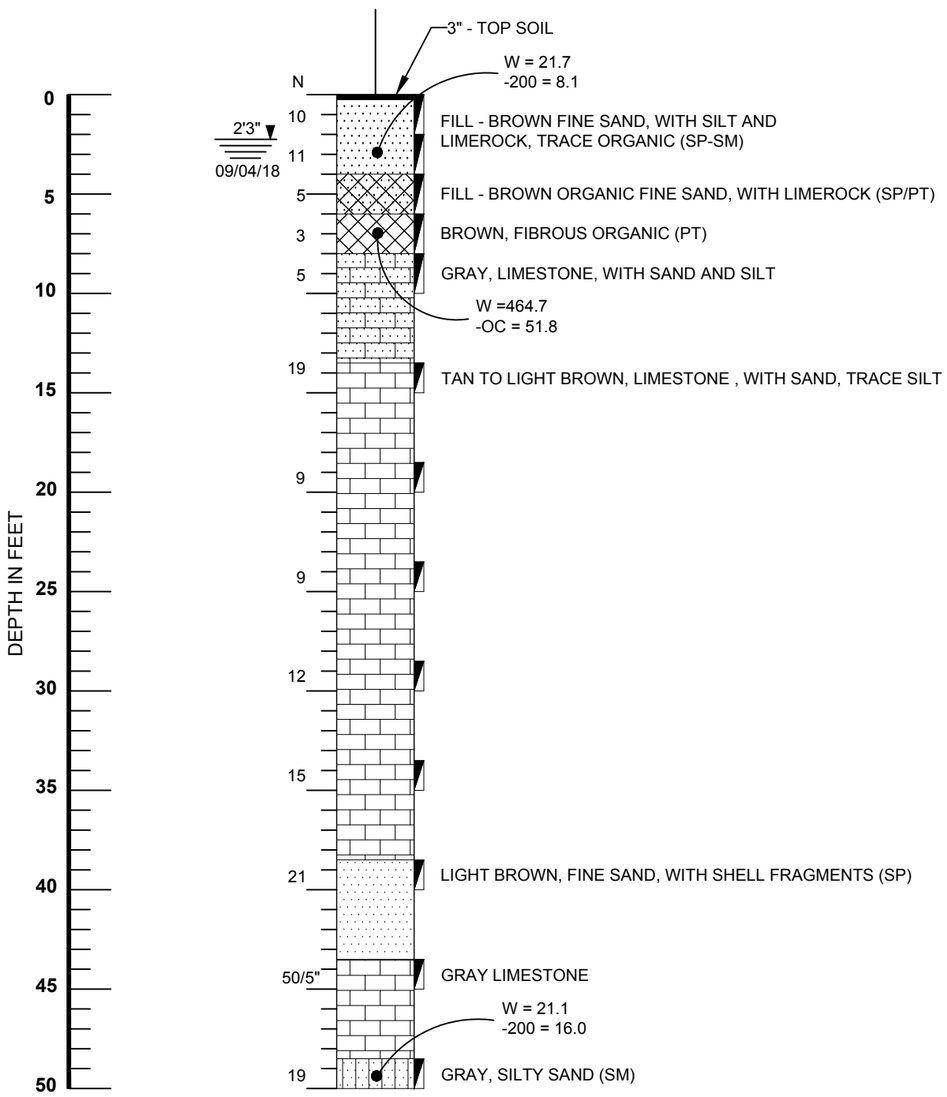

B.T. @ 50'
BELOW EXISTING GRADES

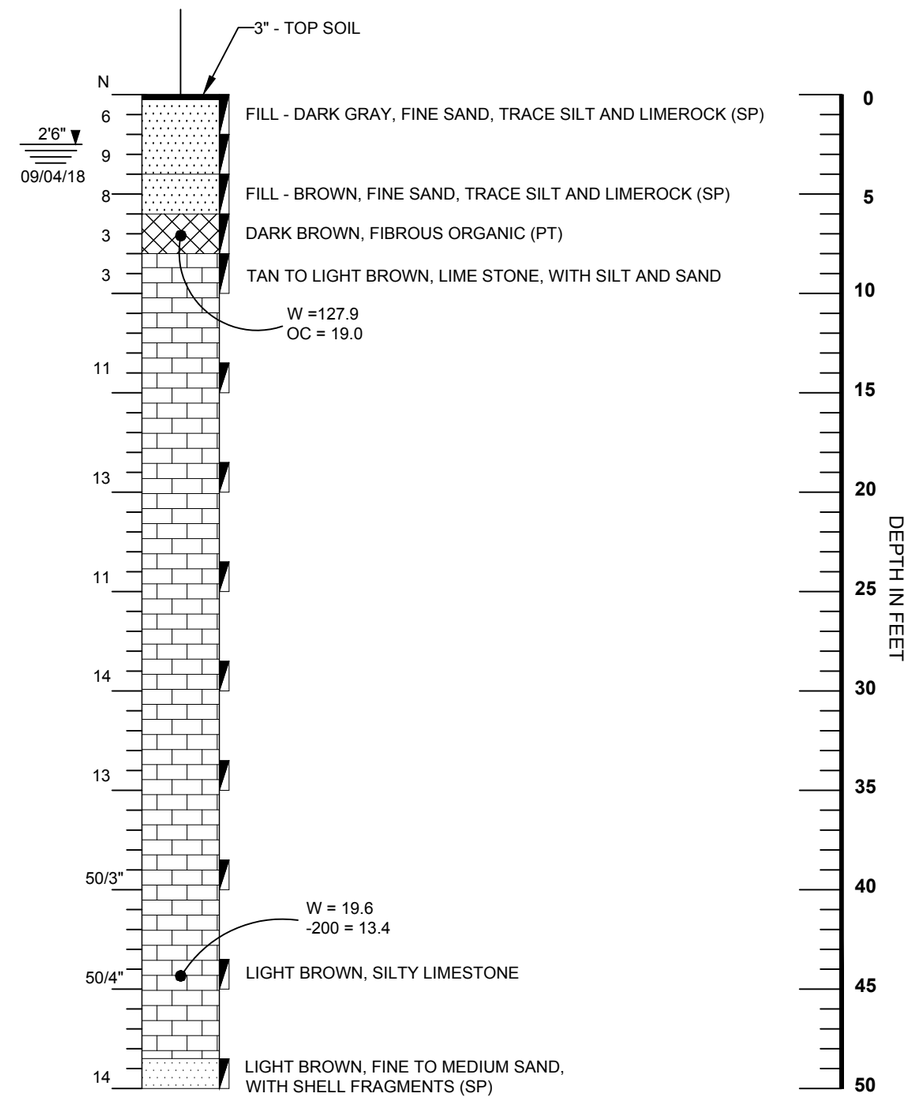

B.T. @ 50'
BELOW EXISTING GRADES

LEGEND

- TOPSOIL, ASPHALT & BASE
- SAND (SP, SP-SM)
- ORGANIC MATERIAL (PT)
- SILTY SAND (SM)
- LIMESTONE
- SILT (ML)
- GRAVEL WITH SAND(GP-GM)

B.T @ 50'	BORING TERMINATED AT 50 FEET BELOW THE EXISTING GROUND SURFACE
DB - 1	STANDARD PENETRATION TEST (SPT) BORING AND NUMBER
N	STANDARD PENETRATION RESISTANCE-BLOWS PER FOOT USING AUTOMATIC HAMMER
	SAMPLING INTERVAL
2'3" 09/04/18	GROUNDWATER LEVEL IN FEET AND DRILLING DATE
W	MOISTURE CONTENT (%)
OC	ORGANIC CONTENT (%)
-200	AMOUNT PASSING US STANDARD 200 SIEVE (%)
SP, SP-SM	UNIFIED SOIL CLASSIFICATION SYSTEM GROUP SYMBOL (ASTM D 2487)

NOTES:

1. BORINGS WERE DRILLED BETWEEN 09/04/2018 AND 09/06/2018. SPT BORINGS WERE PERFORMED USING A CME-45C AUTOMATIC DRILLING RIG (ASTM D1586)
2. STRATA BOUNDARIES ARE APPROXIMATE AND REPRESENT SOIL STRATA AT EACH TEST HOLE LOCATION ONLY. SOIL TRANSITIONS MAY BE MORE GRADUAL THAN IMPLIED.
3. GROUNDWATER LEVELS SHOWN ON THE SUBSURFACE PROFILES REPRESENT GROUNDWATER SURFACES ON THE DATES SHOWN. GROUNDWATER LEVEL FLUCTUATIONS SHOULD BE ANTICIPATED THROUGHOUT THE YEAR.
4. AFTER COMPLETION OF DRILLING, BOREHOLES WERE BACKFILLED WITH GROUT.

STANDARD PENETRATION TEST DATA	
SPOON INSIDE DIA.	1.375 INCH
SPOON OUTSIDE DIA.	2 INCHES
AVG. HAMMER DROP	30 INCHES
HAMMER WEIGHT	140 POUNDS
GRANULAR MATERIALS	AUTOMATIC HAMMER SPT N - VALUE
RELATIVE DENSITY	BLOWS/FOOT
VERY LOOSE	LESS THAN 3
LOOSE	3 - 8
MEDIUM	8 - 24
DENSE	24 - 40
VERY DENSE	GREATER THAN 40
SILTS AND CLAYS	AUTOMATIC HAMMER SPT N - VALUE
CONSISTENCY	BLOWS/FOOT
VERY SOFT	LESS THAN 1
SOFT	1 - 3
FIRM	3 - 6
STIFF	6 - 12
VERY STIFF	12 - 24
HARD	GREATER THAN 24

*FDOT SOILS AND FOUNDATIONS HANDBOOK 2018

REVISIONS

Date.	By	Descriptions	Date.	By	Descriptions

	Names	Dates
Drawn by	A.K	09/17/2018
Checked by	A.P	09/17/2018
Designed by	K.A.	09/17/2018
Checked by	A.N.	09/17/2018
Approved by	A.N.	09/17/2018

RADISE INTERNATIONAL
LICENSE NO. - 8901

RADISE International
4152 West Blue Heron Boulevard, Suite 1114
Riviera Beach, Florida. 33404
TEL 561-841-0103 FAX 561-841-0104
URL : http:// www.radise.net

CITY OF FORT LAUDERDALE

COUNTY	CLIENT
BROWARD	Hazen

SCALE: VERTICAL N.T.S.
SCALE: HORIZONTAL N.T.S.

SHEET TITLE: SUBSURFACE PROFILES

PROJECT NAME: PHASE II - LAS OLAS BOULEVARD FORCE MAIN REPLACEMENT

SHEET NO: 3A

RADISE PROJECT NO: CAM 19-0406 EXHIBIT 3 180818 304

	DB-3	DB-4
BORING NO.	DB-3	DB-4
LONGITUDE:	W -80.1177°	W -80.1164°
LATITUDE:	N 26.1199°	N 26.1201°
RIG:	CME 45	CME 45
HAMMER:	AUTO	AUTO
DRILLER:	T. FICKLING	T. FICKLING
DATE:	09/05/2018	09/05/2018

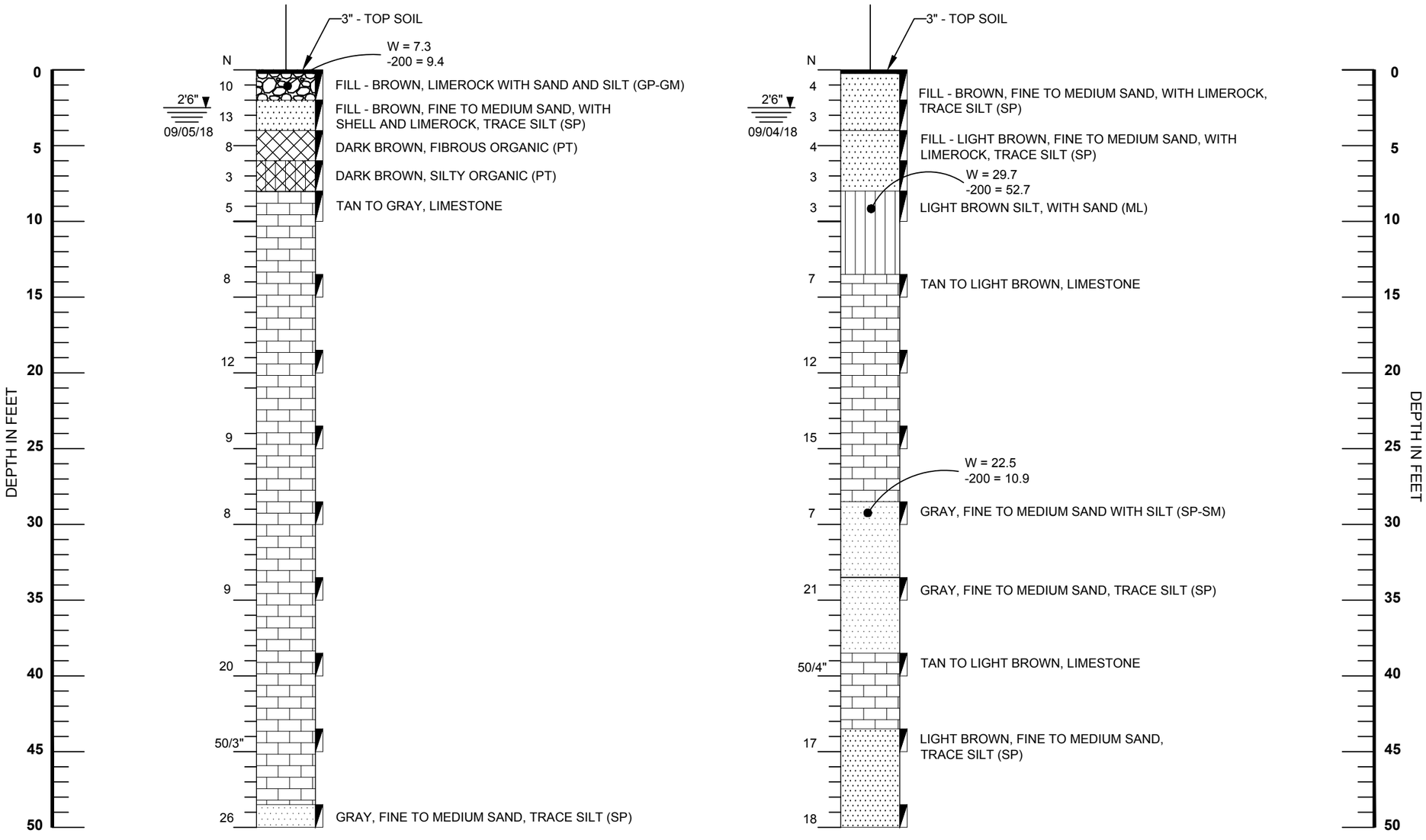

B.T. @ 50'
BELOW EXISTING GRADES

B.T. @ 50'
BELOW EXISTING GRADES

LEGEND

- TOPSOIL, ASPHALT & BASE
- SAND (SP, SP-SM)
- ORGANIC MATERIAL (PT)
- SILTY SAND (SM)
- LIMESTONE
- SILT (ML)
- GRAVEL WITH SAND(GP-GM)

B.T @ 50'	BORING TERMINATED AT 50 FEET BELOW THE EXISTING GROUND SURFACE
DB - 1	STANDARD PENETRATION TEST (SPT) BORING AND NUMBER
N	STANDARD PENETRATION RESISTANCE-BLOWS PER FOOT USING AUTOMATIC HAMMER
	SAMPLING INTERVAL
2'3" 09/04/18	GROUNDWATER LEVEL IN FEET AND DRILLING DATE
W	MOISTURE CONTENT (%)
OC	ORGANIC CONTENT (%)
-200	AMOUNT PASSING US STANDARD 200 SIEVE (%)
SP, SP-SM	UNIFIED SOIL CLASSIFICATION SYSTEM GROUP SYMBOL (ASTM D 2487)

NOTES:

1. BORINGS WERE DRILLED BETWEEN 09/04/2018 AND 09/06/2018. SPT BORINGS WERE PERFORMED USING A CME-45C AUTOMATIC DRILLING RIG (ASTM D1586)
2. STRATA BOUNDARIES ARE APPROXIMATE AND REPRESENT SOIL STRATA AT EACH TEST HOLE LOCATION ONLY. SOIL TRANSITIONS MAY BE MORE GRADUAL THAN IMPLIED.
3. GROUNDWATER LEVELS SHOWN ON THE SUBSURFACE PROFILES REPRESENT GROUNDWATER SURFACES ON THE DATES SHOWN. GROUNDWATER LEVEL FLUCTUATIONS SHOULD BE ANTICIPATED THROUGHOUT THE YEAR.
4. AFTER COMPLETION OF DRILLING, BOREHOLES WERE BACKFILLED WITH GROUT.

STANDARD PENETRATION TEST DATA	
SPOON INSIDE DIA.	1.375 INCH
SPOON OUTSIDE DIA.	2 INCHES
AVG. HAMMER DROP	30 INCHES
HAMMER WEIGHT	140 POUNDS
GRANULAR MATERIALS	AUTOMATIC HAMMER SPT N - VALUE
RELATIVE DENSITY	BLOWS/FOOT
VERY LOOSE	LESS THAN 3
LOOSE	3 - 8
MEDIUM	8 - 24
DENSE	24 - 40
VERY DENSE	GREATER THAN 40
SILTS AND CLAYS	AUTOMATIC HAMMER SPT N - VALUE
CONSISTENCY	BLOWS/FOOT
VERY SOFT	LESS THAN 1
SOFT	1 - 3
FIRM	3 - 6
STIFF	6 - 12
VERY STIFF	12 - 24
HARD	GREATER THAN 24

*FDOT SOILS AND FOUNDATIONS HANDBOOK 2018

REVISIONS

Date.	By	Descriptions	Date.	By	Descriptions

	Names	Dates
Drawn by	A.K	09/17/2018
Checked by	A.P	09/17/2018
Designed by	K.A.	09/17/2018
Checked by	A.N.	09/17/2018
Approved by	A.N.	09/17/2018

RADISE INTERNATIONAL
LICENSE NO. - 8901

RADISE International
4152 West Blue Heron Boulevard, Suite 1114
Riviera Beach, Florida. 33404
TEL 561-841-0103 FAX 561-841-0104
URL : http:// www.radise.net

CITY OF FORT LAUDERDALE

COUNTY	CLIENT
BROWARD	Hazen

SCALE: VERTICAL N.T.S.
SCALE: HORIZONTAL N.T.S.

SHEET TITLE: SUBSURFACE PROFILES

PROJECT NAME: PHASE II - LAS OLAS BOULEVARD FORCE MAIN REPLACEMENT

SHEET NO: 3B

RADISE PROJECT NO: CAM 19-0496 EXHIBIT 3 ~~180818~~

	DB-5	DB-6
BORING NO.	DB-5	DB-6
LONGITUDE:	W -80.1151°	W -80.1137°
LATITUDE:	N 26.1202°	N 26.1201°
RIG:	CME 45	CME 45
HAMMER:	AUTO	AUTO
DRILLER:	T. FICKLING	T. FICKLING
DATE:	09/06/2018	09/06/2018

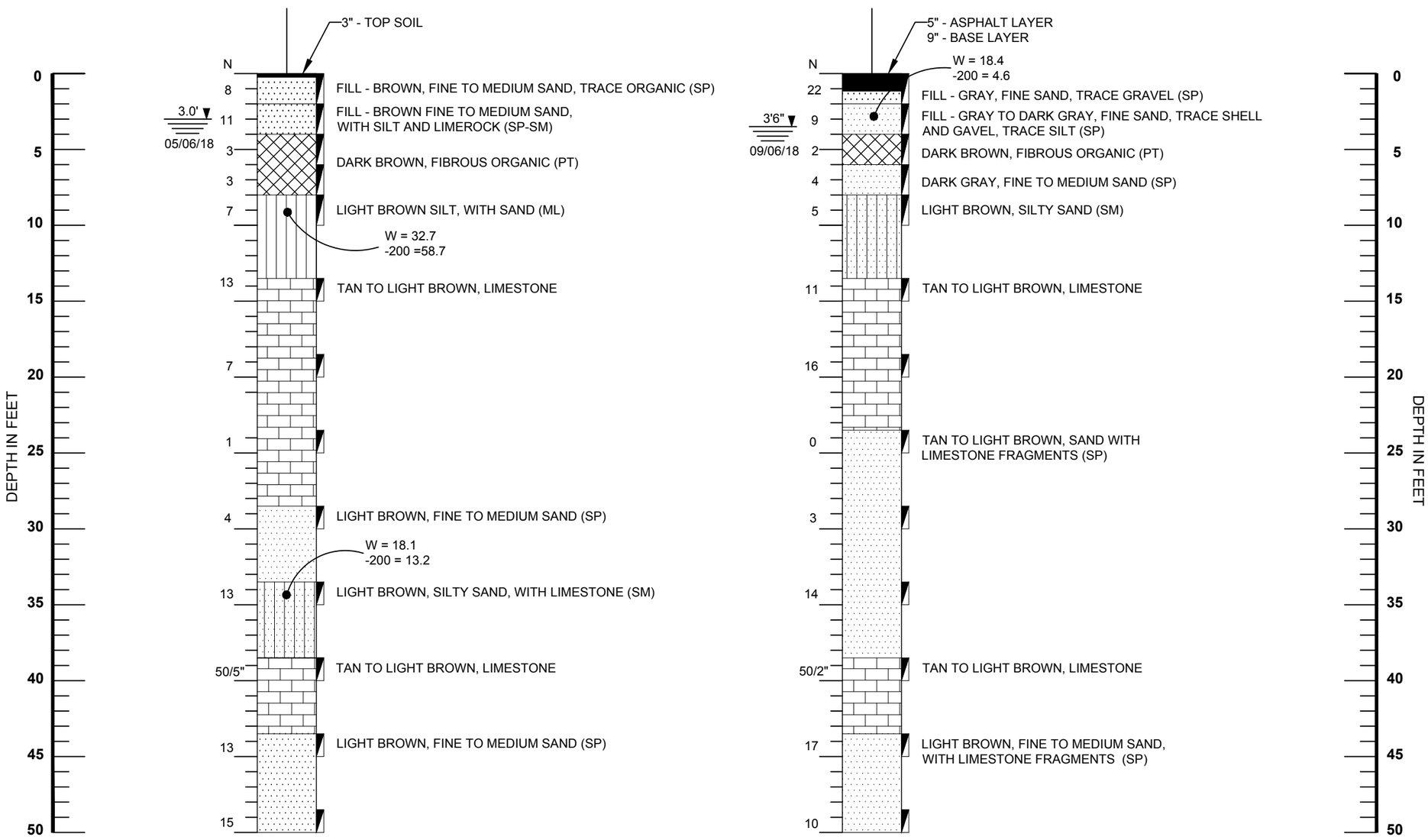

B.T. @ 50'
BELOW EXISTING GRADES

B.T. @ 50'
BELOW EXISTING GRADES

LEGEND

- TOPSOIL, ASPHALT & BASE
- SAND (SP, SP-SM)
- ORGANIC MATERIAL (PT)
- SILTY SAND (SM)
- LIMESTONE
- SILT (ML)
- GRAVEL WITH SAND(GP-GM)

B.T @ 50'	BORING TERMINATED AT 50 FEET BELOW THE EXISTING GROUND SURFACE
DB - 1	STANDARD PENETRATION TEST (SPT) BORING AND NUMBER
N	STANDARD PENETRATION RESISTANCE-BLOWS PER FOOT USING AUTOMATIC HAMMER
	SAMPLING INTERVAL
2'3" ▼ 09/04/18	GROUNDWATER LEVEL IN FEET AND DRILLING DATE
W	MOISTURE CONTENT (%)
OC	ORGANIC CONTENT (%)
-200	AMOUNT PASSING US STANDARD 200 SIEVE (%)
SP, SP-SM	UNIFIED SOIL CLASSIFICATION SYSTEM GROUP SYMBOL (ASTM D 2487)

NOTES:

1. BORINGS WERE DRILLED BETWEEN 09/04/2018 AND 09/06/2018. SPT BORINGS WERE PERFORMED USING A CME-45C AUTOMATIC DRILLING RIG (ASTM D1586)
2. STRATA BOUNDARIES ARE APPROXIMATE AND REPRESENT SOIL STRATA AT EACH TEST HOLE LOCATION ONLY. SOIL TRANSITIONS MAY BE MORE GRADUAL THAN IMPLIED.
3. GROUNDWATER LEVELS SHOWN ON THE SUBSURFACE PROFILES REPRESENT GROUNDWATER SURFACES ON THE DATES SHOWN. GROUNDWATER LEVEL FLUCTUATIONS SHOULD BE ANTICIPATED THROUGHOUT THE YEAR.
4. AFTER COMPLETION OF DRILLING, BOREHOLES WERE BACKFILLED WITH GROUT.

STANDARD PENETRATION TEST DATA	
SPOON INSIDE DIA.	1.375 INCH
SPOON OUTSIDE DIA.	2 INCHES
AVG. HAMMER DROP	30 INCHES
HAMMER WEIGHT	140 POUNDS
GRANULAR MATERIALS	AUTOMATIC HAMMER SPT N - VALUE
RELATIVE DENSITY	BLOWS/FOOT
VERY LOOSE	LESS THAN 3
LOOSE	3 - 8
MEDIUM	8 - 24
DENSE	24 - 40
VERY DENSE	GREATER THAN 40
SILTS AND CLAYS	AUTOMATIC HAMMER SPT N - VALUE
CONSISTENCY	BLOWS/FOOT
VERY SOFT	LESS THAN 1
SOFT	1 - 3
FIRM	3 - 6
STIFF	6 - 12
VERY STIFF	12 - 24
HARD	GREATER THAN 24

*FDOT SOILS AND FOUNDATIONS HANDBOOK 2018

REVISIONS

Date.	By	Descriptions	Date.	By	Descriptions

	Names	Dates
Drawn by	A.K	09/17/2018
Checked by	A.P	09/17/2018
Designed by	K.A.	09/17/2018
Checked by	A.N.	09/17/2018
Approved by	A.N.	09/17/2018

RADISE INTERNATIONAL
LICENSE NO. - 8901

RADISE International
4152 West Blue Heron Boulevard, Suite 1114
Riviera Beach, Florida. 33404
TEL 561-841-0103 FAX 561-841-0104
URL : http:// www.radise.net

CITY OF FORT LAUDERDALE

COUNTY	CLIENT
BROWARD	Hazen

SCALE: VERTICAL N.T.S.
SCALE: HORIZONTAL N.T.S.

SHEET TITLE: SUBSURFACE PROFILES

PROJECT NAME: PHASE II - LAS OLAS BOULEVARD FORCE MAIN REPLACEMENT

SHEET NO: 3C

RADISE PROJECT NO: CAM 19-0196 EXHIBIT 3 190818 3UG

BORING NO.	**DB-7**
LONGITUDE:	**W -80.1122°**
LATITUDE:	**N 26.1202°**
RIG:	**CME 45**
HAMMER:	**AUTO**
DRILLER:	**T. FICKLING**
DATE:	**09/06/2018**

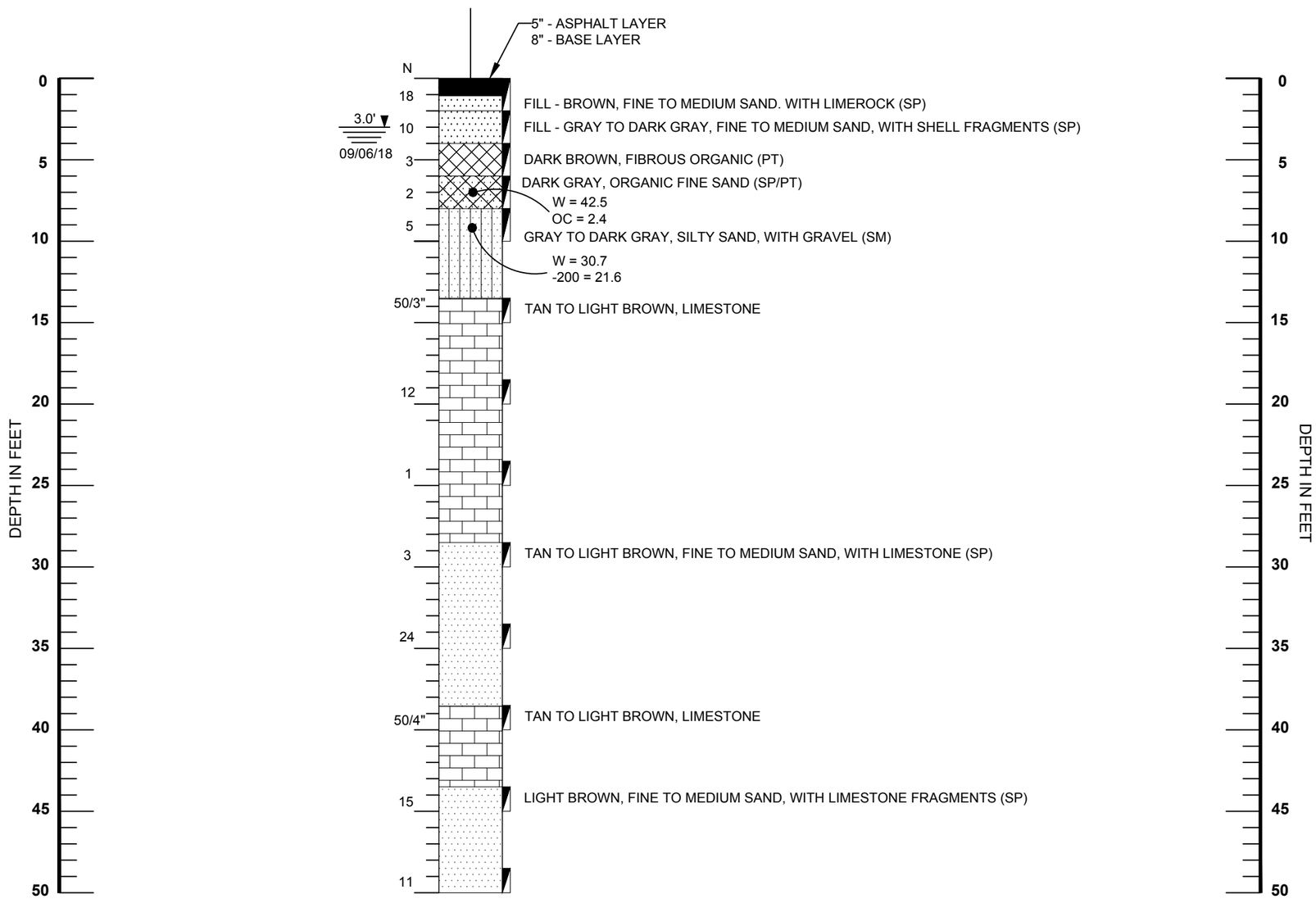

B.T. @ 50'
BELOW EXISTING GRADES

LEGEND

- TOPSOIL, ASPHALT & BASE
- SAND (SP, SP-SM)
- ORGANIC MATERIAL (PT)
- SILTY SAND (SM)
- LIMESTONE
- SILT (ML)
- GRAVEL WITH SAND(GP-GM)

B.T @ 50'	BORING TERMINATED AT 50 FEET BELOW THE EXISTING GROUND SURFACE
DB - 1	STANDARD PENETRATION TEST (SPT) BORING AND NUMBER
N	STANDARD PENETRATION RESISTANCE-BLOWS PER FOOT USING AUTOMATIC HAMMER
	SAMPLING INTERVAL
2'3" 09/04/18	GROUNDWATER LEVEL IN FEET AND DRILLING DATE
W	MOISTURE CONTENT (%)
OC	ORGANIC CONTENT (%)
-200	AMOUNT PASSING US STANDARD 200 SIEVE (%)
SP, SP-SM	UNIFIED SOIL CLASSIFICATION SYSTEM GROUP SYMBOL (ASTM D 2487)

NOTES:

1. BORINGS WERE DRILLED BETWEEN 09/04/2018 AND 09/06/2018. SPT BORINGS WERE PERFORMED USING A CME-45C AUTOMATIC DRILLING RIG (ASTM D1586)
2. STRATA BOUNDARIES ARE APPROXIMATE AND REPRESENT SOIL STRATA AT EACH TEST HOLE LOCATION ONLY. SOIL TRANSITIONS MAY BE MORE GRADUAL THAN IMPLIED.
3. GROUNDWATER LEVELS SHOWN ON THE SUBSURFACE PROFILES REPRESENT GROUNDWATER SURFACES ON THE DATES SHOWN. GROUNDWATER LEVEL FLUCTUATIONS SHOULD BE ANTICIPATED THROUGHOUT THE YEAR.
4. AFTER COMPLETION OF DRILLING, BOREHOLES WERE BACKFILLED WITH GROUT.

STANDARD PENETRATION TEST DATA	
SPOON INSIDE DIA.	1.375 INCH
SPOON OUTSIDE DIA.	2 INCHES
AVG. HAMMER DROP	30 INCHES
HAMMER WEIGHT	140 POUNDS
GRANULAR MATERIALS	AUTOMATIC HAMMER SPT N - VALUE
RELATIVE DENSITY	BLOWS/FOOT
VERY LOOSE	LESS THAN 3
LOOSE	3 - 8
MEDIUM	8 - 24
DENSE	24 - 40
VERY DENSE	GREATER THAN 40
SILTS AND CLAYS	AUTOMATIC HAMMER SPT N - VALUE
CONSISTENCY	BLOWS/FOOT
VERY SOFT	LESS THAN 1
SOFT	1 - 3
FIRM	3 - 6
STIFF	6 - 12
VERY STIFF	12 - 24
HARD	GREATER THAN 24

*FDOT SOILS AND FOUNDATIONS HANDBOOK 2018

REVISIONS

Date.	By	Descriptions	Date.	By	Descriptions

	Names	Dates
Drawn by	A.K	09/17/2018
Checked by	A.P	09/17/2018
Designed by	K.A.	09/17/2018
Checked by	A.N.	09/17/2018
Approved by	A.N.	09/17/2018

RADISE INTERNATIONAL
LICENSE NO. - 8901

RADISE International
4152 West Blue Heron Boulevard, Suite 1114
Riviera Beach, Florida. 33404
TEL 561-841-0103 FAX 561-841-0104
URL : http:// www.radise.net

CITY OF FORT LAUDERDALE

COUNTY	CLIENT
BROWARD	Hazen

SCALE: VERTICAL N.T.S.
SCALE: HORIZONTAL N.T.S.

SHEET TITLE: **SUBSURFACE PROFILES**

PROJECT NAME: **PHASE II - LAS OLAS BOULEVARD FORCE MAIN REPLACEMENT**

SHEET NO: **3D**

RADISE PROJECT NO: CAM 19-0496 EXHIBIT 3 Page 3 of 7

BORING NO. SB-1
LONGITUDE: W -80.1209°
LATITUDE: N 26.1200°
RIG: CME 45
HAMMER: AUTO
DRILLER: T. FICKLING
DATE: 09/04/2018

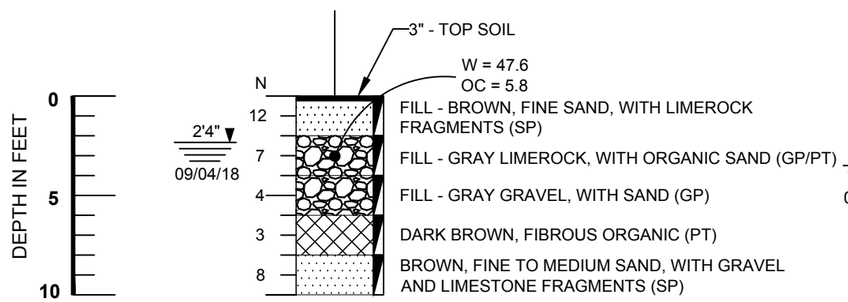

B.T. @ 10'
BELOW EXISTING GRADES

SB-2
W -80.1125°
N 26.1200°
CME 45
AUTO
T. FICKLING
09/06/2018

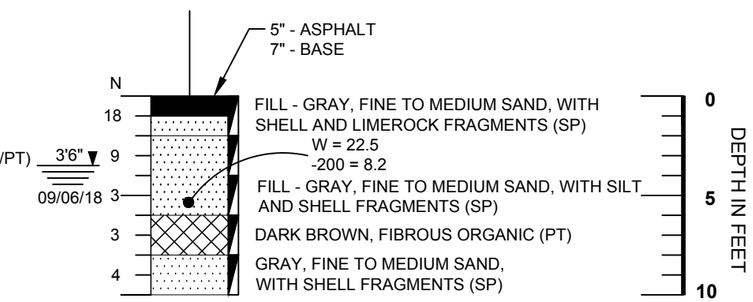

B.T. @ 10'
BELOW EXISTING GRADES

BORING NO. SB-3
LONGITUDE: W -80.1126°
LATITUDE: N 26.1197°
RIG: CME 45
HAMMER: AUTO
DRILLER: T. FICKLING
DATE: 09/06/2018

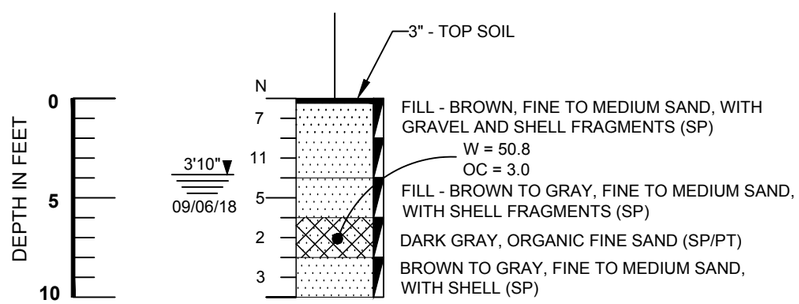

B.T. @ 10'
BELOW EXISTING GRADES

SB-4
W -80.1115°
N 26.1202°
CME 45
AUTO
T. FICKLING
09/06/2018

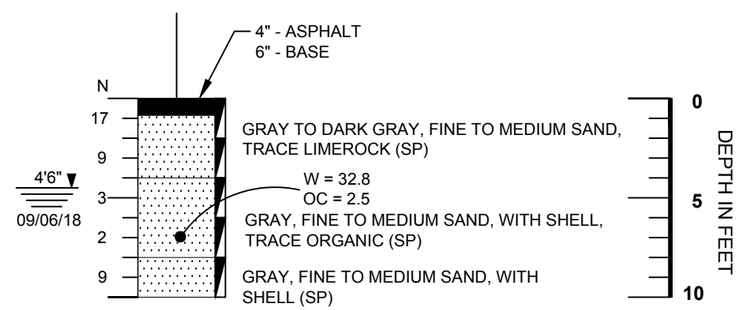

B.T. @ 10'
BELOW EXISTING GRADES

LEGEND

- TOPSOIL, ASPHALT & BASE
- SAND (SP, SP-SM)
- ORGANIC MATERIAL (PT)
- GRAVEL (GP)

B.T @ 10'	BORING TERMINATED AT 10 FEET BELOW THE EXISTING GROUND SURFACE
SB - 1	STANDARD PENETRATION TEST (SPT) BORING AND NUMBER
N	STANDARD PENETRATION RESISTANCE-BLOWS PER FOOT USING AUTOMATIC HAMMER
	SAMPLING INTERVAL
2'4" ▼ 09/04/18	GROUNDWATER LEVEL IN FEET AND DRILLING DATE
W	MOISTURE CONTENT (%)
OC	ORGANIC CONTENT (%)
-200	AMOUNT PASSING US STANDARD 200 SIEVE (%)
SP, SP-SM	UNIFIED SOIL CLASSIFICATION SYSTEM GROUP SYMBOL (ASTM D 2487)

NOTES:

1. BORINGS WERE DRILLED BETWEEN 09/04/2018 AND 09/06/2018. SPT BORINGS WERE PERFORMED USING A CME-45C AUTOMATIC DRILLING RIG (ASTM D1586)
2. STRATA BOUNDARIES ARE APPROXIMATE AND REPRESENT SOIL STRATA AT EACH TEST HOLE LOCATION ONLY. SOIL TRANSITIONS MAY BE MORE GRADUAL THAN IMPLIED.
3. GROUNDWATER LEVELS SHOWN ON THE SUBSURFACE PROFILES REPRESENT GROUNDWATER SURFACES ON THE DATES SHOWN. GROUNDWATER LEVEL FLUCTUATIONS SHOULD BE ANTICIPATED THROUGHOUT THE YEAR.
4. AFTER COMPLETION OF DRILLING, BOREHOLES WERE BACKFILLED WITH GROUT.

STANDARD PENETRATION TEST DATA

SPOON INSIDE DIA.	1.375 INCH
SPOON OUTSIDE DIA.	2 INCHES
AVG. HAMMER DROP	30 INCHES
HAMMER WEIGHT	140 POUNDS
GRANULAR MATERIALS	AUTOMATIC HAMMER SPT N - VALUE
RELATIVE DENSITY	BLOWS/FOOT
VERY LOOSE	LESS THAN 3
LOOSE	3 - 8
MEDIUM	8 - 24
DENSE	24 - 40
VERY DENSE	GREATER THAN 40
SILTS AND CLAYS	AUTOMATIC HAMMER SPT N - VALUE
CONSISTENCY	BLOWS/FOOT
VERY SOFT	LESS THAN 1
SOFT	1 - 3
FIRM	3 - 6
STIFF	6 - 12
VERY STIFF	12 - 24
HARD	GREATER THAN 24

*FDOT SOILS AND FOUNDATIONS HANDBOOK 2018

REVISIONS							Names	Dates
Date.	By	Descriptions	Date.	By	Descriptions	Drawn by	A.K	09/17/2018
						Checked by	A.P	09/17/2018
						Designed by	K.A.	09/17/2018
						Checked by	A.N.	09/17/2018
						Approved by	A.N.	09/17/2018

RADISE INTERNATIONAL
LICENSE NO. - 8901

RADISE International
4152 West Blue Heron Boulevard, Suite 1114
Riviera Beach, Florida. 33404
TEL 561-841-0103 FAX 561-841-0104
URL : http:// www.radise.net

CITY OF FORT LAUDERDALE

COUNTY	CLIENT
BROWARD	Hazen

SCALE: VERTICAL N.T.S.
SCALE: HORIZONTAL N.T.S.

SHEET TITLE: SUBSURFACE PROFILES

PROJECT NAME: PHASE II - LAS OLAS BOULEVARD FORCE MAIN REPLACEMENT

SHEET NO: 3E

RADISE PROJECT NO: CAM 19-0496 EXHIBIT 3 Page 3 of 8

APPENDIX A

TABLE A-1: SUMMARY OF LABORATORY TEST RESULTS
FIGURE A-1: GRAIN SIZE ANALYSIS (DB-1, DB -2, DB-3 & DB-4)
FIGURE A-2: GRAIN SIZE ANALYSIS (DB-5, DB-6 & SB-2)

Table A-1: Summary of Laboratory Test Results

Project Name: FLL Phase II Las Olas Boulevard Force Main Replacement & Modifications to Pump Station D-38

Project ID: 180818

					GRAIN SIZE ANALYSIS U.S STANDARD SIEVE SIZE (% Passing)													
Boring No	Sample Depth	Soil Classification	Moisture Content (%)	Organic Content (%)	-200	3"	1.5"	3/4"	3/8"	#4	#10	#20	#40	#50	#60	#100	#140	#200
DB-1	2'-4'	SP-SM	21.7	-	8.1	100	82.5	77.4	67.2	59.9	55.3	51.7	43.8	34.9	28.7	13.2	9.5	8.1
DB-1	6'-8'	PT	464.7	51.8	-	-	-	-	-	-	-	-	-	-	-	-	-	-
DB-1	48.5'-50'	SM	21.1	-	16.0	-	-	-	-	-	-	-	-	-	-	-	-	-
DB-2	6'-8'	PT	127.9	19.0	-	-	-	-	-	-	-	-	-	-	-	-	-	-
DB-2	43.5'-45	-	19.6	-	13.4	100	100	100	93.7	91.8	90.3	87.1	78.3	73.7	71.2	40.4	16.9	13.4
DB-3	0'-2'	GP-GM	7.3	-	9.4	100	100	72.1	63.9	50.1	40.2	34.0	29.1	25.4	22.8	14.5	10.8	9.4
DB-4	8'-10'	ML	29.7	-	52.7	-	-	-	-	-	-	-	-	-	-	-	-	-
DB-4	28.5'-30'	SP-SM	22.5	-	10.9	100	100	100	100	98.4	97.2	96.2	92.3	85.9	80.6	29.8	13.3	10.9
DB-5	8'-10'	ML	32.7	-	58.7	-	-	-	-	-	-	-	-	-	-	-	-	-
DB-5	33.5'-35	SM	18.1	-	13.2	100	100	94.4	91.5	88.8	84.6	80.8	75.3	73.2	72.1	65.5	22.9	13.2
DB-6	2'-4'	SP	18.7	-	4.6	100	100	100	100	98.1	86.5	60.2	35.9	23.4	18.3	9.4	5.7	4.6
DB-7	6'-8'	SP/PT	42.5	2.4	-	-	-	-	-	-	-	-	-	-	-	-	-	-
DB-7	8'-10'	SM	30.7	-	21.6	-	-	-	-	-	-	-	-	-	-	-	-	-
SB-1	2'-4'	GP/PT	47.6	5.8	-	-	-	-	-	-	-	-	-	-	-	-	-	-
SB-2	4'-6'	SP-SM	22.5	-	8.2	100	100	100	100	98.4	95.4	83.3	63.1	48.9	40.8	21.6	11.1	8.2
SB-3	6'-8'	SP/PT	50.8	3.0	-	-	-	-	-	-	-	-	-	-	-	-	-	-
SB-4	6'-8'	SP	32.8	2.5	-	-	-	-	-	-	-	-	-	-	-	-	-	-

Notes:

Moisture Content tested in accordance ASTM-D2216,
Organic Content tests are performed with furnace temperature @450 Celsius and tested accordance ASTM-D2974,
Soil Classification tested with accordance to ASTM D 2487,
Grain Size Analysis was tested in general accordance with ASTM-D422.

Figure A-1: Grain Size Distribution

CLIENT NAME Hazen and Sawyer, P.C.

PROJECT NAME Phase II Las Olas Boulevard Force Main Replacement & Modifications to Pump Station D-38

PROJECT NUMBER 180818

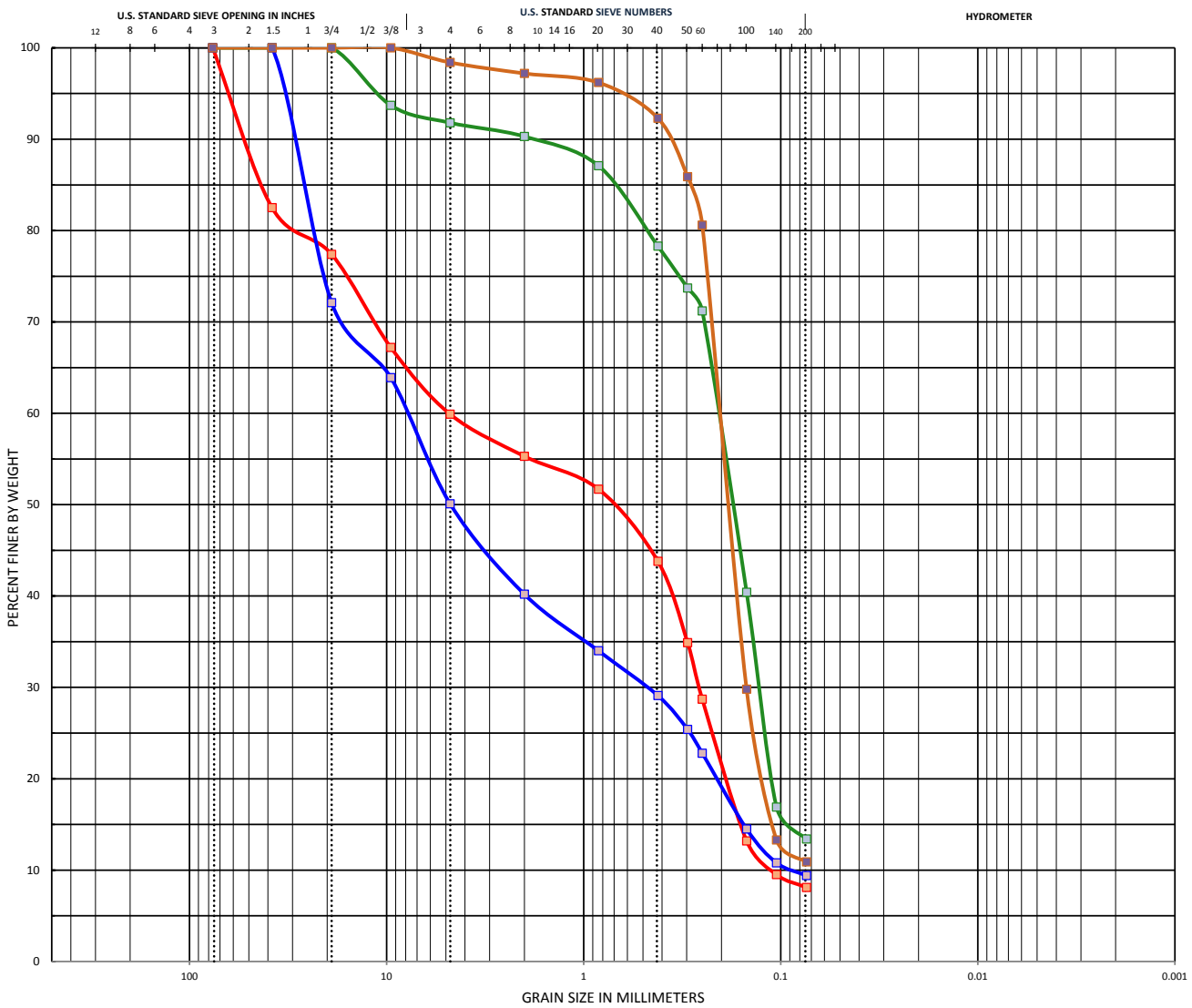

COBBLES	GRAVEL		SAND			SILT OR CLAY
	coarse	fine	coarse	medium	fine	

Boring No, Depth	Classification	LL	PL	PI	Cc	Cu
DB-1 , 2'-4'	**Poorly-graded sand with silt and gravel (SP-SM)**	**NP**	**NP**	**NP**	**0.13**	**43.91**
DB-2 , 43.5'-45	**Silty sand (SM)**	**NP**	**NP**	**NP**	**0**	**0**
DB-3 , 3"-2'	**Poorly-graded gravel with silt and sand (GP-GM)**	**NP**	**NP**	**NP**	**0.34**	**90.78**
DB-4 , 28.5'-30'	**Poorly-graded sand with silt (SP-SM)**	**NP**	**NP**	**NP**	**0**	**0**

Boring No, Depth	D100	D60	D30	D10	% Cobble	%Gravel	%Sand	%Silt	%Clay
DB-1 , 2'-4'	**76.2**	**4.83**	**0.26**	**0.11**	**0**	**40.1**	**51.8**	**8.1**	
DB-2 , 43.5'-45	**19**	**0.21**	**0.13**	**0**	**0**	**8.2**	**78.4**	**13.4**	
DB-3 , 3"-2'	**38.1**	**8.17**	**0.5**	**0.09**	**0**	**49.9**	**40.7**	**9.4**	
DB-4 , 28.5'-30'	**9.51**	**0.21**	**0.15**	**0**	**0**	**1.6**	**87.5**	**10.9**	

Figure A-2: Grain Size Distribution

CLIENT NAME Hazen and Sawyer, P.C.

PROJECT NAME FLL Phase II Las Olas Boulevard Force Main Replacement & Modifications to Pump Station D-38

PROJECT NUMBER 180818

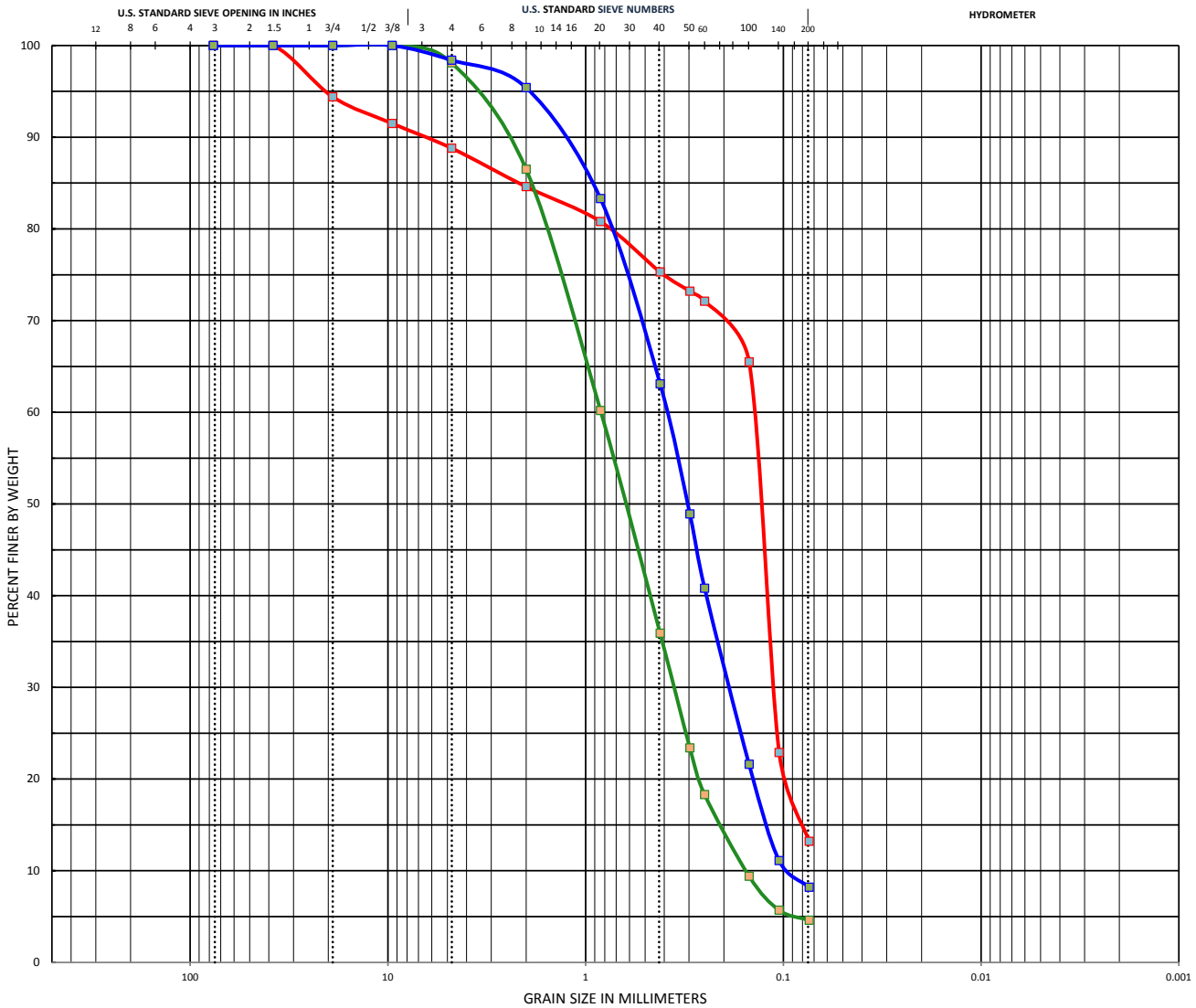

COBBLES	GRAVEL		SAND			SILT OR CLAY
	coarse	fine	coarse	medium	fine	

Boring No, Depth	Classification	LL	PL	PI	Cc	Cu
DB-5 , 33.5'-35	**Silty sand (SM)**	**NP**	**NP**	**NP**	**0**	**0**
DB-6 , 2'-4'	**Poorly-graded sand (SP)**	**NP**	**NP**	**NP**	**0.96**	**5.25**
SB-2 , 4'-6'	**Poorly-graded sand with silt (SP-SM)**	**NP**	**NP**	**NP**	**1.03**	**4.33**

Boring No, Depth	D100	D60	D30	D10	% Cobble	%Gravel	%Sand	%Silt	%Clay
DB-5 , 33.5'-35	**38.1**	**0.14**	**0.11**	**0**	**0**	**11.2**	**75.6**	**13.2**	
DB-6 , 2'-4'	**9.51**	**0.84**	**0.36**	**0.16**	**0**	**1.9**	**93.5**	**4.6**	
SB-2 , 4'-6'	**9.51**	**0.39**	**0.19**	**0.09**	**0**	**1.6**	**90.2**	**8.2**	

DRAWING INDEX

CITY OF FORT LAUDERDALE

PROJECT #12390
SEWER DESIGN AND IMPLEMENTATION PROGRAM
PUMP STATION D-38

RIVIERA ISLES
FORT LAUDERDALE, FLORIDA

Hazen

HAZEN AND SAWYER
4000 HOLLYWOOD BLVD, SUITE 750N
HOLLYWOOD, FLORIDA 33021

Certificate of Authorization No: 2771

THOMPSON & ASSOCIATES
CERTIFICATE OF AUTHORIZATION 28185
PO BOX 22398, FORT LAUDERDALE, FLORIDA 33335
MIAMI-DADE (786) 897.5919
BROWARD (954) 761.1073
PALM BEACH (561) 932.1668

ENGINEER:
NOEL RODRIGUEZ, P.E.
REG. No: 86390
DATE: 5/21/2019

TEL: 954-761-1073
FAX: 954-987-2949

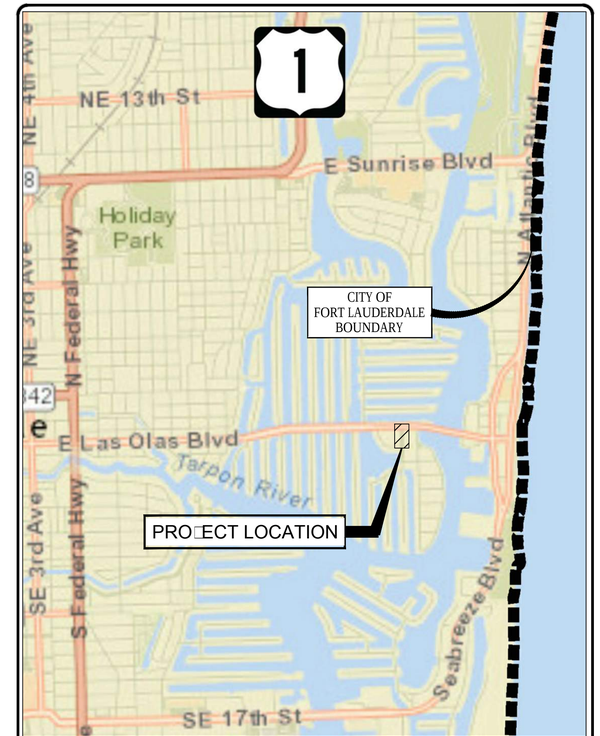

NORTH

LOCATION SKETCH

PROJECT #12390
SEWER DESIGN AND IMPLEMENTATION PROGRAM
PUMP STATION D-38

CITY OF FORT LAUDERDALE
PUBLIC WORKS DEPARTMENT
ENGINEERING & ARCHITECTURE
100 North Andrews Avenue, Fort Lauderdale, Florida 33301

FORT LAUDERDALE CITY COMMISSION

DEAN J. TRANTALIS	MAYOR
HEATHER MORAITIS	COMMISSIONER - DISTRICT I
STEVEN GLASSMAN	COMMISSIONER - DISTRICT II
ROBERT McKINZIE	COMMISSIONER - DISTRICT III
BEN SORENSEN	COMMISSIONER - DISTRICT IV

PROJECT MANAGER	JOB TITLE	PHONE NO.

DATE: 5/21/2019

CAD FILE: 43194007-G00-COVR

DRAWING FILE No.: 4-XXX-XX

BID SET, NOT FOR CONSTRUCTION

ABBREVIATIONS

VALVE AND FITTING ABBREVIATIONS:

ARV	AIR RELIEF VALVE
BF	BLIND FLANGE
BFV	BUTTERFLY VALVE
BV	BALL VALVE
CO	CLEAN OUT
CPLG	COUPLING
CV	CHECK VALVE
DV	DIAPHRAGM VALVE
EXP JT	EXPANSION JOINT
FCO	FLOOR CLEAN OUT
FD	FLOOR DRAIN
FH	FIRE HYDRANT
FLG	FLANGE
FS	FLOOR SINK
GV	GATE VALVE
HB	HOSE BIBB
HD	HUB DRAIN
ICV	IRRIGATION CONTROL VALVE
LR	LONG RADIUS
MJ	MECHANICAL JOINT
NPT	NATIONAL PIPE THREAD
PE	PLAIN END
PV	PLUG VALVE
PRV	PRESSURE RELIEF VALVE
RED	REDUCER
SOV	SOLENOID OPERATED VALVE
THD	THREADED
VAC	VACUUM

PIPING:

CIP	CAST IRON PIPE
CMP	CORRUGATED METAL PIPE
CU	COPPER OR CUBIC
DIP	DUCTILE IRON PIPE
GIP	GALVANIZED PIPE
GSP	GALVANIZED STEEL PIPE
HDPE	HIGH DENSITY POLYETHYLENE PIPE
IP	IRON PIPE
PCCP	PRECAST CONCRETE CYLINDER PIPE
PVC	POLYVINYLCHLORIDE
RCP	REINFORCED CONCRETE PIPE
SCP	SECONDARY CONTAINMENT PIPE
SS	STAINLESS STEEL PIPE

GENERAL

A	ARC DISTANCE
AB	ANCHOR BOLT
A/C	AIR CONDITIONER
ACU	AIR CONDENSATE UNIT
AL, ALUM	ALUMINUM
α	ANGLE
APPROX	APPROXIMATE
ARCH	ARCHITECTURAL
BLDG	BUILDING
BLK	BLOCK
BM	BENCHMARK
BOTT	BOTTOM
BOW	BACK OF WALK
BP	BID PACKAGE
CA	CENTRAL ANGLE
CB	CATCH BASIN
CC	CENTER TO CENTER
CHK'D	CHECKERED
C.I.	CURB INLET
CJ	CONSTRUCTION JOINT
CL, q	CENTER LINE
CLF	CHAIN LINK FENCE
CLR	CLEAR
COL	COLUMN
CO	COMPANY
CONC, C	CONCRETE
CONST	CONSTRUCTION
CONT	CONTINUOUS
CONTR	CONTRACTOR
CP	CONCRETE POST
DET	DETAIL
DIA	DIAMETER
DIAG	DIAGONAL
DIM	DIMENSION
DISDIR	DIRECTION
CH	DISCHARGE
DMH	DRAIN MANHOLE
DN	DOWN
DR	DRAIN
DWL	DOWEL
DWG	DRAWING
EA	EACH
ECC	ECCENTRIC
EE	EACH END
EF	EACH FACE
EL, ELEV	ELEVATION
ELEC	ELECTRIC
ENGR	ENGINEER
EOP	EDGE OF PAVEMENT
EW	EACH WAY
EQUIP	EQUIPMENT

GENERAL CONT.

ES	ELECTRICAL SERVICE
ESC	EROSION AND SEDIMENT CONTROL
EXH	EXHAUST
EXIST	EXISTING
EXP	EXPANSION
EXT	EXTERIOR
FDOT	FLORIDA DEPARTMENT OF TRANSPORTATION
FDR	FLOOR DRAIN
FE	FIRE EXTINGUISHER
FF	FINISH FLOOR
FG	FINISH GRADE
FIN	FINISH
FL	FLOOR
FM	FORCE MAIN
FND	FOUND
FP	FLAG POLE
FT	FOOT OR FEET
FTG	FOOTING OR FITTING
GALV	GALVANIZED
GPM	GALLONS PER MINUTE
GR	GRADE
H	HIGH
HORIZ	HORIZONTAL
HP	HIGH POINT
HS	HIGH SERVICE
HWL	HIGH WATER LEVEL
ID	INSIDE DIAMETER
IE	INVERT ELEVATION
IF	INSIDE FACE
IN	INCH
INFL	INFLUENT
INJ	INJECTION
INSUL	INSULATION
INT	INTERIOR
INV	INVERT
IP	IRON PIPE
IRRIG	IRRIGATION
IR	IRON ROD
ISO	ISOLATION
JCT	JUNCTION
JT	JOINT
LBS/FT	POUNDS PER FOOT
LG	LONG
LN	LINE
LP	LOW POINT OR LIGHT POLE
LR	LONG RADIUS
LWL	LOW WATER LEVEL
MANUF	MANUFACTURER
MAX	MAXIMUM
MECH	MECHANICAL
MGD	MILLION GALLONS PER DAY

GENERAL CONT.

MH	MANHOLE
MIN	MINIMUM
MO	MASONRY OPENING
MOV	MOTOR OPERATED VALVE
NAVD	NORTH AMERICAN VERTICAL DATUM
NGVD	NATIONAL GEODETIC VERTICAL DATUM
NIC	NOT IN CONTRACT
NO	NUMBER
NTS	NOT TO SCALE
OC	ON CENTER
OD	OUTSIDE DIAMETER
OHW	OVERHEAD WIRES
OPNG	OPENING
P/L	PROPERTY LINE
PRB	POLLUTION RETARDANT BAFFLE
PS	PUMP STATION
PT	PRESSURE TREATED
R	RIM
RAD, R	RADIUS
RECIR	RECIRCULATION
RE	RIM ELEVATION
REHAB	REHABILITATION
REINF	REINFORCING
REQ'D	REQUIRED
R/W,	ROW RIGHT OF WAY
SECT	SECTION
SHT	SHEET
SLB	SIGNAL LIGHT BOX
SMH	STORMWATER MANHOLE
SPEC	SPECIFICATION
SQ	SQUARE
SS	STAINLESS STEEL
STIN	STORM INLET
STMH	STORM MANHOLE
STL	STEEL
STRUC	STRUCTURAL
SYMM	SYMMETRICAL
TBD	TO BE DETERMINED
TEMP	TEMPORARY
THK	THICK
TI	TEMPERATURE INDICATOR
TO	THROUGHOUT
TOB	TOP OF BANK
TOC	TOP OF CONCRETE
TOE	TOE OF SLOPE
TOP	TOP OF PIPE
TOS	TOP OF SLAB
TYP	TYPICAL
UGE	UNDERGROUND ELECTRIC
UNK	UNKNOWN

GENERAL CONT.

V	VENT
VERT	VERTICAL
VP	VENT PIPE
VTR	VENT THROUGH ROOF
W	WIDE
W/	WITH
WATR	WATER
WGR	WOOD GUARDRAIL
W/L	WATER LEVEL
W/O	WITH OUT
WWF	WELDED WIRE FABRIC
WUP	WOOD UTILITY POLE

FLOWSTREAM IDENTIFICATION:

ED	EQUIPMENT DRAIN
FM	FORCE MAIN
FR	FUEL RETURN
FS	FUEL SUPPLY
OF	OVERFLOW
PW	POTABLE WATER
RD	ROOF DRAIN
SA	SAMPLE
SAN	SANITARY SEWER
SPD	SUMP PUMP DISCHARGE
STRM	STORMWATER
WM	WATER MAIN

Hazen

HAZEN AND SAWYER
4000 HOLLYWOOD BLVD, SUITE 750N
HOLLYWOOD, FLORIDA 33021
Certificate of Authorization No: 2771

THOMPSON & ASSOCIATES
CERTIFICATE OF AUTHORIZATION 28185
PO BOX 22398, FORT LAUDERDALE, FLORIDA 33335
MIAMI-DADE (786) 897.5919
BROWARD (954) 761.1073
PALM BEACH (561) 932.1668

ENGINEER: NOEL RODRIGUEZ, P.E.
REG. No: 48480
DATE: 5/21/2019
TEL: 954-761-1073
FAX: 954-987-2949

DRAWN BY: NR
DATE: 11/27/2018
DESIGNED BY: NR
SCALE: N/A
CHECKED BY: JFT
FIELD BOOK: XXXX

CITY OF FORT LAUDERDALE
PUBLIC WORKS DEPARTMENT
ENGINEERING & ARCHITECTURE
100 North Andrews Avenue, Fort Lauderdale, Florida 33301

REVISIONS

NO.	DATE	BY	CHK'D	DESCRIPTION

BID SET, NOT FOR CONSTRUCTION

PROJECT # 12390
SEWER DESIGN AND IMPLEMENTATION PROGRAM
PUMP STATION D-38
ABBREVIATIONS

SHEET NO. G-1 OF 02
TOTAL: 25
CAD FILE: 43194007-G01-ABBR
DRAWING FILE NO. 4-XXX-XXXX

LINETYPES

COMMUNICATION, CABLE TV, TELEPHONE:

- COM(CT) — COMCAST LINES
- COM OH — COMMUNICATIONS
- COM(CC) — CROWN CASTLE LINES
- COM(FD) — FIBERNET DIRECT LINES
- COM(L3) — LEVEL 3 LINES
- GPS OH — GPG LINES
- UGT — UNDERGROUND TELEPHONE LINES
- OHT — OVERHEAD TELEPHONE LINES

ELECTRIC LINES:

- X-X ELEC — ELECTRIC DUCT (X-X = WIRES/GUAGE)
- UGE — UNDERGROUND ELECTRIC LINES
- OHE — OVERHEAD ELECTRIC LINES

OTHERS LINES:

- GAS — GAS MAIN (SIZE UNKNOWN)
- X" GAS — GAS MAIN (SIZE)
- AIR — UNDERGROUND AIR LINE
- FM — SANITARY FORCE MAIN (SIZE UNKNOWN)
- X" FM — SANITARY FORCE MAIN (SIZE)
- X" PVC FM — SANITARY FORCEMAIN (SIZE/MATERIAL)
- SAN — SANITARY GRAVITY (SIZE UNKNOWN)
- X" SAN — SANITARY GRAVITY MAIN (SIZE)
- X" PVC SAN — SANITARY GRAVITY (SIZE/MATERIAL)
- SD — STORM DRAINAGE (SIZE UNKNOWN)
- X" SD — STORM DRAINAGE (SIZE)
- X" PVC SD — STORM DRAINAGE (SIZE/MATERIAL)
- WM — WATER MAIN (SIZE UNKNOWN)
- X" WM — WATER MAIN (SIZE)
- X" DIP WM — WATER MAIN (SIZE/MATERIAL)
- OHW — OVER HEAD WIRES (TYPE UNKNOWN)
- UNK UG — UNDERGROUND LINE (TYPE UNKNOWN)
- ABANDONED
- DEMOLISHED
- EXISTING
- PROPOSED
- PROPOSED PIPELINE (DOUBLE LINE IF SCALE OF DRAWING PERMITS)
- PLASTIC FENCE
- WOODEN FENCE
- WROUGHT IRON FENCE
- CHAIN LINK FENCE
- BOARD FENCE
- PROPERTY LINE
- EASEMENT LINE

SYMBOLS, LEGEND AND HATCH PATTERNS

LANSCAPING SYMBOLS:

- PALM TREE
- SHADE TREE
- PINE TREE
- CACTUS
- HEDGE
- VEGETATION
- BUSH
- UNKNOWN TREE

LEGEND:

- A/C — AIR CONDITIONING UNIT
- AIR RELEASE VALVE
- AR — AIR VALVE MANHOLE
- ANCHOR
- BFP — BACK FLOW PREVENTER
- BASKET BALL HOOP
- BBQ GRILL
- BLOW-OFF VALVE
- BOAT ANCHOR CLEAT
- BOLLARD
- BUILDING COLUMN/PILE
- CATV PEDESTAL
- CATCH BASIN
- CATCH BASIN INLET
- CLEAN OUT
- COMMUNICATION MANHOLE
- COMMUNICATION VAULT
- CONCRETE LIGHT POLE
- CONCRETE POST
- CONCRETE POWER POLE
- 10.00 — CONTOUR LINE ELEVATION
- CROSS FITTING
- CURB INLET
- DECORATIVE/YARD LIGHT POLE
- DETECTOR CHECK VALVE
- DCV — DOUBLE DETECTOR CHECK VALVE
- E — ELECTRIC BOX
- E — ELECTRIC MANHOLE
- ELECTRICAL METER
- ELECTRIC METER/SERVICE
- ELECTRICAL OUTLET
- ELECTRICAL PEDESTAL
- ELECTRICAL PULL BOX
- ELECTRICAL VAULT
- x 10.00 — EXISTING SPOT ELEVATION

LEGEND CONT:

- FIRE HYDRANT
- FIBER OPTIC PEDESTAL
- FLAG — FLAG POLE
- FM — FORCE MAIN VALVE
- FC — GAS FUEL CAP
- GAS MARKER
- GAS METER
- GAS — GAS VALVE
- GAS WELL
- GATE CONTROL BOX
- G — GREASE TRAP MH
- GUY ANCHOR AND WIRE
- HOSE BIBB
- IRR — IRRIGATION CONTROL VALVE
- LS — LIFT STATION
- LIFT STATION CAN
- LP — LIGHT POLE
- LP — LP GAS TANK
- MAILBOX
- MAIL DROP BOX — MAIL DROP BOX
- MANHOLE
- MARKER POST
- METAL LIGHT POLE
- MONITORING WELL
- OUTFALL
- PARK BENCH
- PEDESTRIAN SIGNAL
- PILE
- PIN FLAG
- PIPE MATERIAL CHANGE
- PARKING LIGHT 1 BULB
- PARKING LIGHT 1 BULB
- PARKING LIGHT 2 BULBS
- PARKING LIGHT 2 BULBS
- PARKING LIGHT 3 BULBS
- PARKING LIGHT 3 BULBS
- PARKING LIGHT 4 BULBS
- PARKING LIGHT 4 BULBS
- PARKING METER
- PARKING METER (DOUBLE)
- PLUG
- POST INDICATOR VALVE
- REDUCER
- ROOF DRAIN

LEGEND CONT:

- RAILROAD CROSSING GATE
- REDUCER FITTING
- CO — SANITARY CLEAN OUT
- S — SANITARY MANHOLE
- SANITARY WYE LATERAL
- SIAMESE VALVE
- SIGN
- SIGN DOUBLE POST
- SPOT-FLOOD LIGHT
- SPK — SPRINKLER HEAD
- SOIL BORING
- SQUARE COLUMN
- STEEL I-BEAM
- CO — STORM CLEAN OUT
- D — STORM MANHOLE
- STORM DRAINAGE VAULT
- TEE FITTING
- TELEPHONE BOOTH — TELEPHONE BOOTH
- TELEPHONE JUNCTION BOX
- T — TELEPHONE MANHOLE
- PAY PHONE — TELEPHONE ON PEDESTAL
- TELEPHONE PEDESTAL
- TELEPHONE PULL BOX
- TELEPHONE VAULT
- TE-1 — TEST EXCAVATION LOCATION
- TEST HOLES
- TOWER — TOWER
- TRAFFIC CAMERA
- TRAFFIC CONTROL
- TRAFFIC POLE
- TRAFFIC PULL BOX
- TSB — TRAFFIC SIGNAL BOX
- TSP — TRAFFIC SIGNAL POLE
- TRANS — TRANSFORMER PAD
- TRASH CAN
- TRASH CAN
- MH — UNKNOWN MANHOLE
- VALLEY CURB INLET
- VALVE BOX
- VALVE PIPE
- W — WATER MANHOLE
- WATER METER
- WATER METER
- WATER METER (DOUBLE)
- WATER PUMP

LEGEND CONT.

- WV — WATER VALVE
- WATER VAULT
- WATER WELL
- WOOD POST
- WOOD LIGHT POLE
- WOOD TELEPHONE POLE
- WOOD POWER POLE
- YD — YARD DRAIN

CONTROL LEGEND:

- AERIAL TARGET
- BM — BENCH MARK
- D•H — DRILL HOLE
- HUB & TACK
- IP — IRON PIPE
- IR — IRON ROD
- NAIL&TAB
- PERMANENT REFERENCE MONUMENT
- PERMANENT REFERENCE MONUMENT NAIL&TAB
- PKNAIL.SPIKE
- QUARTER SECTION CORNER
- SECTION CORNER
- x.x.x — EXISTING SPOT ELEVATION
- x.x.x — PROPOSED SPOT ELEVATION

HATCH LEGEND:

- PERMEABLE PAVEMENT
- SOD RESTORATION
- EXFILTRATION TRENCH
- POROUS PAVEMENT
- CONTRACTOR STAGING AREA
- CONCRETE
- PAVER BRICKS
- GRAVEL
- MILL & RESURFACE
- DEMOLITION AREA
- GRADING DIRECTION

SECTION AND DETAIL IDENTIFICATION

SECTION IDENTIFICATION

A. SECTION CUT ON DRAWING C-1

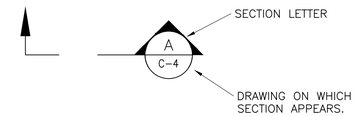

B. ON DRAWING C-2 THIS SECTION IS IDENTIFIED AS:

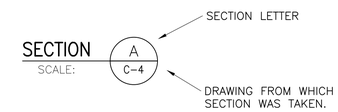

DETAIL IDENTIFICATION

A. NON STANDARD DETAIL CALL-OUT ON DRAWING:

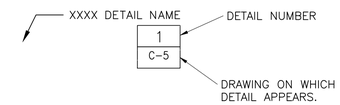

B. CITY STANDARD DETAIL CALL-OUT ON DRAWING:

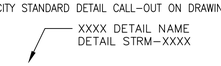

GENERAL NOTES:

(1) ELECTRICAL SYMBOLS SHOWN ON ELECTRICAL SHEETS.

(2) FOR WELDING SYMBOLS USE AMERICAN WELDING SOCIETY STANDARD SYMBOLS.

* DENOTES DIMENSIONS OR ELEVATIONS DEPENDENT ON EQUIPMENT SUPPLIED.

Hazen

HAZEN AND SAWYER
4000 HOLLYWOOD BLVD, SUITE 750N
HOLLYWOOD, FLORIDA 33021

Certificate of Authorization No: 2771

THOMPSON & ASSOCIATES
CERTIFICATE OF AUTHORIZATION 28185
PO BOX 22398, FORT LAUDERDALE, FLORIDA 33335
MIAMI-DADE (786) 897.5919
BROWARD (954) 761.1073
PALM BEACH (561) 932.1668

ENGINEER: NOEL RODRIGUEZ, P.E.
REG. No. 48480
DATE: 5/21/2019
TEL: 954-761-1073
FAX: 954-987-2949

DRAWN BY: NR	DATE: 11/27/2018
DESIGNED BY: NR	SCALE: N/A
CHECKED BY: JFT	
FIELD BOOK: XXXX	

CITY OF FORT LAUDERDALE
PUBLIC WORKS DEPARTMENT
ENGINEERING & ARCHITECTURE
100 North Andrews Avenue, Fort Lauderdale, Florida 33301

REVISIONS

NO.	DATE	BY	CHK'D	DESCRIPTION

BID SET, NOT FOR CONSTRUCTION

PROJECT # 12390
SEWER DESIGN AND IMPLEMENTATION PROGRAM
PUMP STATION D-38
SYMBOLS

SHEET NO.	OF
G-2	03

TOTAL: 25

CAD FILE: 43194007-G02-LEGN

DRAWING FILE NO. 4-XXX-XXXX

GENERAL NOTES:

1. CONTRACTOR SHALL MAINTAIN ACCESS TO PRIVATE PROPERTY AT ALL TIMES.
2. REFER TO SPECIFICATION SECTION 01001 AND 01520 FOR DETAILED REQUIREMENTS FOR SEQUENCE OF CONSTRUCTION AND CONSTRUCTION CONSTRAINTS.
3. SITE INFORMATION HAS BEEN PROVIDED BY SITE SURVEY PREPARED BY LONGITUDE SURVEYORS, LLC
4. HORIZONTAL CONTROL IS REFERENCED TO THE FLORIDA STATE PLANE COORDINATE SYSTEM, EAST ZONE, BASED ON THE NORTH AMERICAN DATUM OF 1983 (NAD 83). VERTICAL CONTROL IS REFERENCED TO THE NORTH AMERICAN VERTICAL DATUM OF 1988 (NAVD 88).
5. RECORD DRAWINGS MAY BE OBTAINED FROM THE OWNER UPON REQUEST.
6. CONTRACTOR SHALL VERIFY FIELD CONDITIONS BEFORE COMMENCEMENT OF ANY CONSTRUCTION ACTIVITIES. CONTRACTOR SHALL VERIFY EXISTING ELEVATIONS AND DIMENSIONS WHERE NEW WORK WILL MATCH EXISTING. DISCREPANCIES SHALL BE BROUGHT TO THE ATTENTION OF THE ENGINEER FOR RESOLUTION PRIOR TO THE COMMENCEMENT OF WORK.
7. CONTRACTOR SHALL OBTAIN ALL THE NECESSARY PERMITS FROM THE APPROPRIATE AUTHORITIES, DEPARTMENTS, AND/OR AGENCIES HAVING JURISDICTION PRIOR TO COMMENCING WORK.
8. ALL PRACTICAL AND NECESSARY EFFORTS SHALL BE TAKEN DURING CONSTRUCTION TO PREVENT UNNECESSARY TREE REMOVAL AND/OR DAMAGE.
9. THE LOCATION OF EXISTING UTILITIES HAS BEEN PREPARED FROM THE MOST RELIABLE INFORMATION AVAILABLE TO THE ENGINEER. THE INFORMATION IS NOT GUARANTEED. THEREFORE THE CONTRACTOR SHALL VERIFY THE LOCATION AND ELEVATION OF ALL UTILITIES IN THE FIELD PRIOR TO THE START OF ANY CONSTRUCTION ACTIVITIES.
10. UTILITIES HAVE BEEN PLOTTED FROM AVAILABLE SURVEY INFORMATION. IT IS THE CONTRACTOR'S RESPONSIBILITY TO VERIFY THEIR EXACT LOCATION AND TO AVOID DAMAGE TO THEM. THE CONTRACTOR SHALL CONTACT SUNSHINE 811 AT PHONE NUMBER 811 OR 1-800-432-4770 TO REQUEST UNDERGROUND UTILITY LOCATION MARK-OUT AT LEAST TWO (2) WORKING DAYS BUT NO MORE THAN TEN (10) WORKING DAYS PRIOR TO BEGINNING EXCAVATION, INCLUDING SOIL DRILLING. THE CONTRACTOR SHALL ALSO CONTACT AND REQUEST UTILITY LOCATION MARK-OUT FROM BURIED UTILITY OWNERS WITH UTILITIES ON THE PROJECT SITE THAT ARE NOT PARTICIPANTS OF SUNSHINE 811.
11. CONTRACTOR SHALL REPLACE SURROUNDING LAND COVER AFFECTED BY CONSTRUCTION ACTIVITIES, INCLUDING, BUT NOT LIMITED TO, PAVERS, SIDEWALK, SOD, AND LANDSCAPING, TO EXISTING OR BETTER CONDITIONS.
12. CONTRACTOR SHALL TAKE CARE TO AVOID DAMAGE TO EXISTING PAVEMENT, STRUCTURES, AND UTILITIES THAT ARE NOT INDICATED TO BE DEMOLISHED OR REMOVED. ANY DAMAGE TO EXISTING PAVEMENT, STRUCTURES, AND UTILITIES NOT INDICATED TO BE DEMOLISHED OR REMOVED SHALL BE REPAIRED AT THE CONTRACTOR'S EXPENSE.
13. WHERE PROPOSED WORK IS IN THE VICINITY OF UTILITY POLES, SUCH THAT SUPPORT OF THE POLE(S) WILL BE REQUIRED, THE CONTRACTOR SHALL BE RESPONSIBLE FOR NOTIFYING THE UTILITY OF THE WORK. IT WILL BE THE RESPONSIBILITY OF THE CONTRACTOR TO COORDINATE WITH THE UTILITY FOR SUPPORT OF THE POLE.
14. DURING EXCAVATION AND PLACEMENT OF UTILITIES THE CONTRACTOR SHALL COMPLY WITH ALL APPLICABLE SAFETY REGULATIONS AND SHALL SUBMIT TO THE ENGINEER FOR APPROVAL SHEET PILING, SHORING AND/OR BRACING DESIGNS AS MAY BE NECESSARY TO COMPLY WITH THESE REGULATIONS.
15. GROUNDWATER FROM ALL DEWATERING OPERATIONS SHALL BE DISCHARGED TO AN ENVIRONMENTALLY ACCEPTABLE LOCATION IN ACCORDANCE WITH THE CONTRACT DOCUMENTS, OR AS DIRECTED BY THE ENGINEER.
16. THE CONTRACTOR SHALL REMOVE AND DISPOSE OF ALL DEBRIS GENERATED DURING THE PROJECT OFF SITE AT A PROPERLY PERMITTED DISPOSAL FACILITY.
17. FOR REFERENCE MONUMENTS, SEE SURVEY DRAWING.
18. THE CONTRACTOR IS REQUIRED TO OBTAIN WRITTEN APPROVAL FROM THE ENGINEER FOR ANY DEVIATIONS FROM THE PLANS AND/OR SPECIFICATIONS.
19. THE UNDERGROUND CONTRACTOR SHALL MINIMIZE THE WORK AREA AND WIDTH OF TRENCHES TO AVOID DISTURBANCES OF NATURAL VEGETATION. SPOIL FROM TRENCHES SHALL BE PLACED ONLY ON PREVIOUSLY CLEARED AREAS, EXISTING RIGHT-OF-WAY OR APPROVED EASEMENT. THE CONTRACTOR SHALL NOT REMOVE OR DISTURB ANY TREES OR SHRUBS WITHOUT PRIOR APPROVAL FROM THE ENGINEER.
20. ALL RESTORATION SHALL CONFORM TO THE STANDARDS AND REQUIREMENTS OF THE AGENCIES HAVING JURISDICTION OVER THE RIGHT-OF-WAY WHERE THE PROJECT IS CONSTRUCTED.
21. ALL LOOP DETECTORS, COMMUNICATION CABLES AND CONDUITS, IF DAMAGED BY THE CONTRACTOR'S ACTIVITIES, SHALL BE REPAIRED AND/OR REPLACED IN ACCORDANCE WITH BCTED AND FDOT REQUIREMENTS.
22. PIPING, FITTINGS, AND APPURTENANCES FOR DUCTILE IRON PIPE SHALL BE RESTRAINED JOINT WHERE SHOWN ON THE PLANS OR AS OTHERWISE SPECIFICALLY SPECIFIED IN THE CONTRACT DRAWINGS.
23. RESILIENT SEATED GATE VALVES WITH BEVEL TYPE GEAR SHALL BE INSTALLED IN HORIZONTAL ORIENTATION WHEN LESS THAN 7-FEET OF COVER FROM TOP OF PIPE IS PRESENT OR AS OTHERWISE SPECIFICALLY SPECIFIED IN THE CONTRACT DRAWINGS.
24. NO CONNECTIONS FOR THE PURPOSE OF OBTAINING WATER SUPPLY DURING CONSTRUCTION SHALL BE MADE TO ANY FIRE HYDRANT OR BLOW-OFF STRUCTURE WITHOUT FIRST OBTAINING PERMISSION AND A CONSTRUCTION METER FROM THE CITY OF FORT LAUDERDALE.
25. THE CONTRACTOR WILL BE RESPONSIBLE FOR LOCATING, MOVING AND RELOCATING OR REPLACING ALL WATER SERVICES OR SEWER LATERALS WHICH ARE ENCOUNTERED DURING EXCAVATION. THE CONTRACTOR SHALL SUBMIT A WRITTEN PLAN FOR WATER SERVICE AND WASTEWATER SERVICE DISRUPTION FOR APPROVAL 7 (SEVEN) CALENDAR DAYS PRIOR TO THE ANTICIPATED DISRUPTION. THE CONTRACTOR SHALL NOTIFY THE PROPERTY OWNERS 48 HOURS IN ADVANCE OF ANY WORK ON THEIR SERVICES. THIS WORK SHALL BE CONSIDERED INCIDENTAL.
26. THE CONTRACTOR MUST INFORM THE CITY AT LEAST 48-HOURS IN ADVANCE OF CONSTRUCTION, IN WRITING IF ANY CONFLICT IS DISCOVERED DURING POT HOLE OPERATIONS FOR CLARIFICATION BY THE CITY.
27. IT WILL BE THE RESPONSIBILITY OF THE CONTRACTOR TO NOTIFY THE UTILITIES DEPARTMENT OF THE CITY OF FORT LAUDERDALE AT LEAST TWO (2) BUSINESS DAYS IN ADVANCE TO COORDINATE ANY ACTIVITY TO BE PERFORMED BY THE CITY'S UTILITIES DEPARTMENT.
28. CONTRACTOR SHALL NOT DISTURB AREAS OUTSIDE EXISTING RIGHTS-OF-WAY.
29. ALL WORK WITHIN STATE DEPARTMENT OF TRANSPORTATION (FDOT) RIGHT-OF-WAYS SHALL BE IN CONFORMANCE WITH FDOT SPECIFICATIONS AND PERMIT REQUIREMENTS.
30. ALL WORK WITHIN BROWARD COUNTY RIGHT-OF-WAYS SHALL BE IN CONFORMANCE WITH THE BROWARD COUNTY MINIMUM STANDARDS AND/OR REQUIREMENTS.
31. CONTRACTOR SHALL COMPLY WITH ALL LOCAL CITY, COUNTY AND STATE REGULATIONS PERTAINING TO THE CLOSING OF PUBLIC STREETS FOR USE OF TRAFFIC DURING CONSTRUCTION.
32. CONTRACTOR SHALL PREPARE AND SUBMIT MAINTENANCE OF TRAFFIC (MOT) PLANS TO FDOT, CITY OF FORT LAUDERDALE, BROWARD COUNTY AS REQUIRED FOR WORK TO BE DONE WITHIN THEIR R/W PRIOR TO COMMENCEMENT OF WORK. SPECIFIC AGENCY MOT REQUIREMENTS ARE THE SOLE RESPONSIBILITY OF THE CONTRACTOR.
33. STATIONS SHOWN ON THE DRAWINGS ARE BASED ON THE ESTABLISHED BASELINE AND SHALL NOT BE CONSIDERED AS DISTANCES OR AS A MEASURE OF THE LINEAR FOOTAGE OF PIPE TO BE INSTALLED.
34. THE GENERAL INTENT IS TO PROVIDE SEWER SERVICE LATERALS FOR EACH PROPERTY. ALL LATERAL LOCATIONS SHALL BE FIELD ADJUSTED.
35. ALL OPEN TRENCHES AND HOLES ADJACENT TO ROADWAY OR WALKWAY SHALL BE PROPERLY MARKED AND BARRICADED TO ASSURE THE SAFETY OF BOTH VEHICULAR AND PEDESTRIAN TRAFFIC.
36. TRENCHES OR HOLES NEAR WALKWAYS, IN ROADWAYS OR THEIR SHOULDERS SHALL NOT BE LEFT OPEN DURING NIGHT TIME HOURS WITHOUT ADEQUATE PROTECTION.
37. CONTRACTOR SHALL PROMPTLY REPAIR AND RESTORE EXISTING PAVEMENT, SIDEWALKS, CURBS, DRIVEWAYS, PIPES, RESIDENTIAL AND COMMERCIAL SPRINKLER LINES, CONDUIT, CABLES, ETC. AND LANDSCAPE AREAS DAMAGED AS A RESULT OF CONSTRUCTION ACTIVITIES.
38. CONTRACTOR SHALL PROVIDE TEMPORARY FENCING AS REQUIRED BY AGENCIES HAVING JURISDICTION OVER THE PROJECT AND/OR WHEN REQUIRED FOR PUBLIC SAFETY.
39. THE CONTRACTOR SHALL BE RESPONSIBLE AT ALL TIMES THROUGHOUT THE DURATION OF CONSTRUCTION AND UNTIL ACCEPTANCE OF WORK, FOR THE PROTECTION OF EXISTING AND NEWLY INSTALLED UTILITIES FROM DAMAGE OR DISRUPTION OF SERVICE. THE CONTRACTOR SHALL BE RESPONSIBLE FOR TAKING SUCH MEASURES AS NECESSARY TO PROTECT THE HEALTH, SAFETY AND WELFARE OF THOSE PERSONS HAVING ACCESS TO THE WORK SITE.
40. LOCATION OF AIR RELEASE VALVES MAY BE FIELD ADJUSTED BY THE ENGINEER OR CITY OF FORT LAUDERDALE AS NECESSARY.
41. CONTRACTOR SHALL ADJUST TO GRADE ALL EXISTING UTILITY CASTINGS INCLUDING VALVE BOXES, MANHOLES, HAND HOLES, PULL BOXES, INLETS AND SIMILAR STRUCTURES IN CONSTRUCTION AREA TO BE OVERLAYED WITH ASPHALT.
42. EXISTING TRAFFIC SIGNS SHALL BE RESET UPON COMPLETION PER BROWARD COUNTY TRAFFIC ENGINEERING STANDARDS. COST SHALL BE CONSIDERED INCIDENTAL. CONTRACTOR SHALL REPAIR OR REPLACE DAMAGED TRAFFIC SIGNAL LOOPS PER BROWARD COUNTY TRAFFIC ENGINEERING SPECIFICATIONS; COST SHALL BE INCIDENTAL.
43. CONTRACTOR SHALL RESTORE EXISTING PAVEMENT AND PAVEMENT MARKINGS/SIGNAGE TO ORIGINAL PRE-CONSTRUCTION CONDITION OR AS OTHERWISE SPECIFIED IN CONTRACT DOCUMENTS. THIS WORK SHALL BE CONSIDERED INCIDENTAL.
44. ALL CONSTRUCTION WITHIN FDOT R/W MUST CONFORM WITH FDOT SPECIFICATIONS, STANDARDS, AND PERMIT REQUIREMENTS. NO WORK SHALL COMMENCE WITHIN FDOT R/W's WITHOUT AN FDOT PERMIT. FULL LANE WIDTH RESTORATION TO MATCH EXISTING PAVEMENT SECTION IS REQUIRED IN ACCORDANCE WITH FDOT STANDARDS FOR PROPOSED WORK WITHIN FDOT R/W.
45. THE CONTRACTOR SHALL SUBMIT ALL REQUIRED SHOP DRAWINGS FOR CITY APPROVAL PRIOR TO ORDERING MATERIALS AND INSTALLATION.
46. EXISTING GAS MAINS SHALL BE IDENTIFIED BY THE APPROPRIATE UTILITY, PRIOR TO START OF CONSTRUCTION.

UTILITY CONTACTS

OWNER/AGENCY	UTILITY	CONTACT NAME	PHONE No.	EMAIL
CITY OF FORT LAUDERDALE	WATER, SEWER & STORMWATER	JON STAHL	954-828-7830	jstahl@fortlauderdale.gov
COMCAST CABLE	CONDUITS & CABLES	CHRIS TAYLOR	954-239-8386	christopherT@cwsifl.com
FLORIDA POWER & LIGHT	ELECTRICAL CONDUITS & OVERHEAD	TROY LEWIS	954-717-2057	Troy.Lewis@FPL.com
TECO PEOPLE GAS	GAS LINES	DAVID RIVERA	954-453-0794	drrivera@tecoenergy.com
FDOT	ITS & STORMWATER	JORGE CORRALES	954-777-4651	Jorge CorralesAdot.state.fl.us

Hazen

HAZEN AND SAWYER
4000 HOLLYWOOD BLVD, SUITE 750N
HOLLYWOOD, FLORIDA 33021

Certificate of Authorization No: 2771

THOMPSON & ASSOCIATES
CERTIFICATE OF AUTHORIZATION 28185
PO BOX 22398, FORT LAUDERDALE, FLORIDA 33335
MIAMI-DADE (786) 897.5919
BROWARD (954) 761.1073
PALM BEACH (561) 932.1668

ENGINEER:
NOEL RODRIGUEZ, P.E.
LICENSE No. 48580
DATE: 5/21/2019

TEL: 954-761-1073
FAX: 954-987-2949

DRAWN BY: NR
DATE: 11/27/2018
DESIGNED BY: NR
SCALE: N/A
CHECKED BY: JFT
FIELD BOOK: XXXX

CITY OF FORT LAUDERDALE
PUBLIC WORKS DEPARTMENT
ENGINEERING & ARCHITECTURE
100 North Andrews Avenue, Fort Lauderdale, Florida 33301

REVISIONS

NO.	DATE	BY	CHK'D	DESCRIPTION

BID SET, NOT FOR CONSTRUCTION

PROJECT # 12390
SEWER DESIGN AND IMPLEMENTATION PROGRAM
PUMP STATION D-38
GENERAL NOTES

SHEET NO. G-3 OF 04
TOTAL: 25
CAD FILE: 43194007-G03-NOTE
DRAWING FILE NO. 4-XXX-XXXX

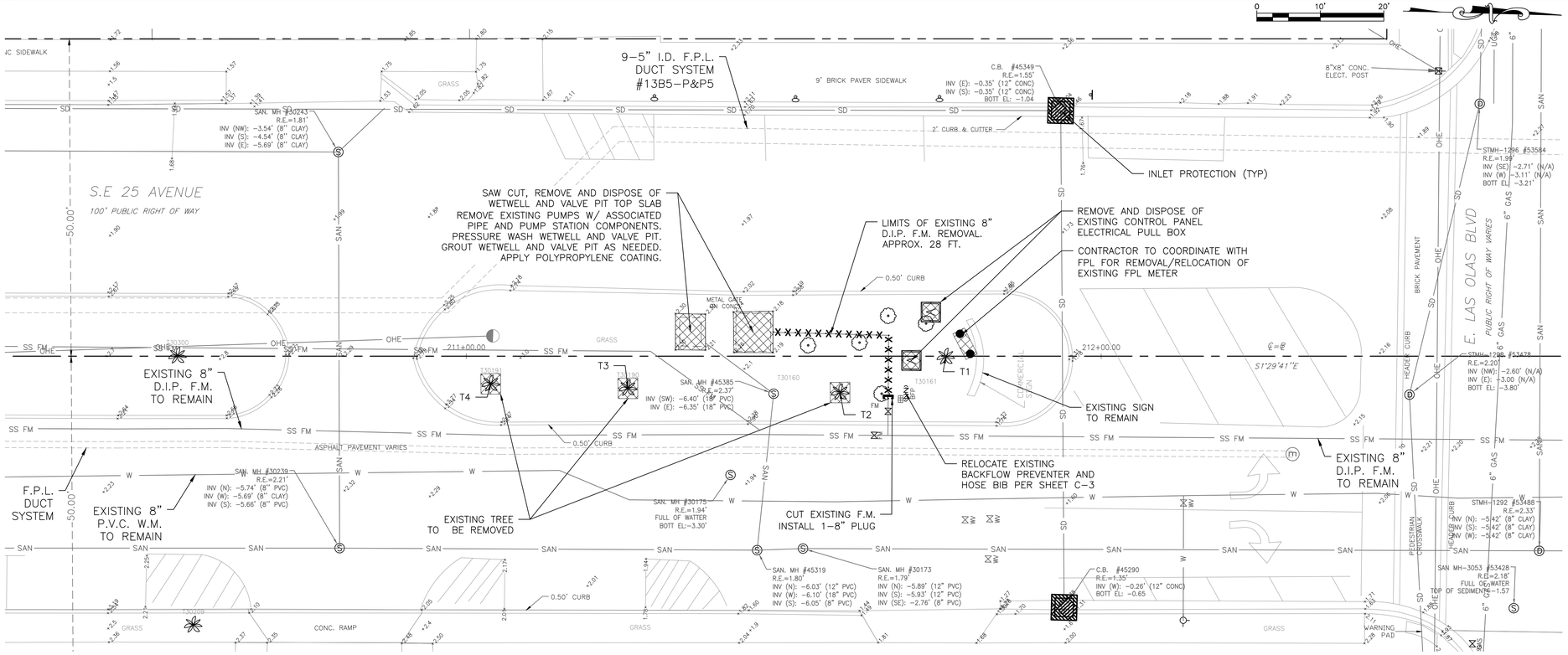

DEMOLITION PLAN

SCALE: 1"=10'

DEMOLITION NOTES:

1. CONTRACTOR SHALL REPLACE SURROUNDING GROUND AFFECTED INCLUDING BUT NOT LIMITED TO PAVERS, CURB, SIDEWALK, SOD, AND BRING IT TO EXISTING OR BETTER CONDITIONS.
2. CONTRACTOR TO SUBMIT SIGN AND SEALED LANDSCAPE AND IRRIGATION PLANS TO THE CITY FOR APPROVAL.
3. CONTRACTOR SHALL LOCATE ALL EXISTING UTILITIES PRIOR TO START OF ANY DEMOLITION.
4. EXISTING UTILITY DEPTHS ARE UNKNOWN UNLESS OTHERWISE INDICATED. LOCATIONS AND DEPTHS ARE ESTIMATES.
5. CONTRACTOR SHALL PROVIDE ADEQUATE INLET PROTECTION AND EROSION CONTROL DURING CONSTRUCTION.
6. ALL CODES REGULATING DEMOLITION WORK SHALL BE COMPLIED WITH. THE CONTRACTOR SHALL PUT UP AND MAINTAIN SUCH BARRIERS AND WARNING LIGHTS, AS MAY BE NECESSARY OR REQUIRED BY CODE, TO PROTECT AND PREVENT UNAUTHORIZED PERSONNEL FROM ENTERING THE DEMOLITION WORK AREA.
7. ALL DEMOLITION OPERATIONS SHALL COMPLY WITH THE REQUIREMENTS OF THE FEDERAL OCCUPATIONAL SAFETY AND HEALTH ACT (OSHA) INSOFAR AS THEY APPLY TO DEMOLITION WORK TO BE PERFORMED UNDER THIS CONTRACT.
8. TEMPORARY PROTECTIVE DEVICES, AS REQUIRED SHALL BE INSTALLED ADJACENT TO THE DEMOLITION WORK FOR PROTECTION OF PERSONNEL, EXISTING ADJACENT BUILDINGS, STRUCTURES AND EQUIPMENT AGAINST DUST, FALLING OR FLYING DEBRIS. ANY DAMAGE TO EXISTING STRUCTURES, FACILITIES AND/OR EQUIPMENT RESULTING FROM DEMOLITION WORK SHALL BE REPAIRED BY THE CONTRACTOR AT NO COST TO THE OWNER.
9. ALL DEBRIS AND EXISTING MATERIALS AND EQUIPMENT SHALL BE HAULED AWAY AND DISPOSED OF BY THE CONTRACTOR. THE CONTRACTOR SHALL MAKE HIS OWN ARRANGEMENTS FOR OBTAINING DISPOSAL
10. THE CONTRACTOR SHALL TAKE EVERY PRECAUTION TO PREVENT SPILLAGE OF MATERIALS BEING HAULED IN PUBLIC STREETS. IT SHALL BE THE CONTRACTOR'S RESPONSIBILITY TO IMMEDIATELY CLEAN UP ANY SPILLAGE WHICH MAY ACCIDENTALLY OCCUR.
11. THE CONTRACTOR SHALL MAINTAIN AN ORDER OF NEATNESS AND GOOD HOUSEKEEPING. TOOLS, SCAFFOLDING AND OTHER DEMOLITION EQUIPMENT MUST AT ALL TIMES BE KEPT IN A NEAT AND ORDERLY ARRANGEMENT. AT THE CONCLUSION OF THE DEMOLITION OPERATIONS, THE ENTIRE WORK AREA SHALL BE LEFT IN A CLEAN CONDITION AS REQUIRED FOR SUBSEQUENT NEW WORK.

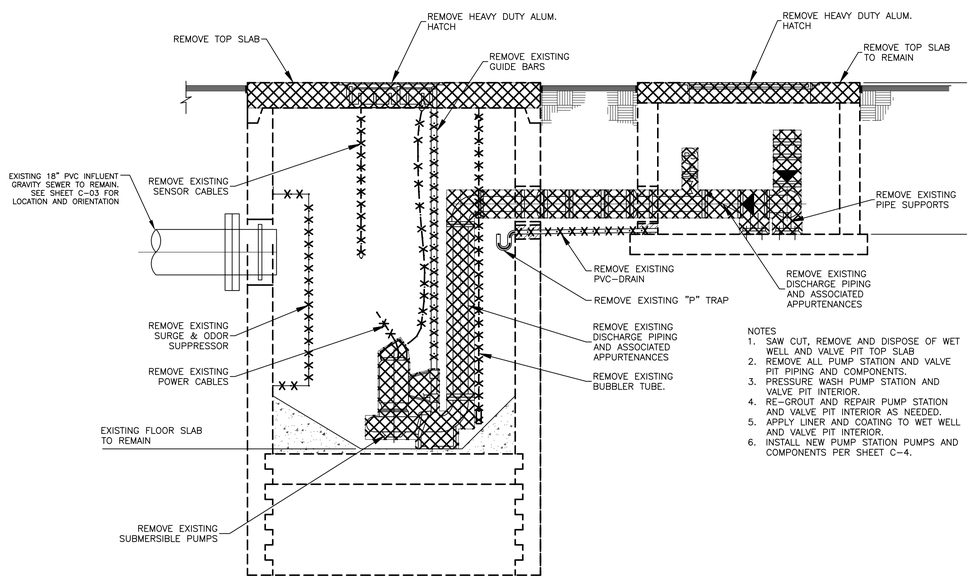

NOTES
1. SAW CUT, REMOVE AND DISPOSE OF WET WELL AND VALVE PIT TOP SLAB
2. REMOVE ALL PUMP STATION AND VALVE PIT PIPING AND COMPONENTS.
3. PRESSURE WASH PUMP STATION AND VALVE PIT INTERIOR.
4. RE–GROUT AND REPAIR PUMP STATION AND VALVE PIT INTERIOR AS NEEDED.
5. APPLY LINER AND COATING TO WET WELL AND VALVE PIT INTERIOR.
6. INSTALL NEW PUMP STATION PUMPS AND COMPONENTS PER SHEET C–4.

PUMP STATION DEMOLITION DETAIL

SCALE: N.T.S.

TREE DISPOSITION PLAN

TREE No.	COMMON NAME	SCIENTIFIC NAME	CALIPER	HEIGHT	CONDITION	DISPOSITION
T1	CANARY DATE PALM	Phoenix canariensis	18"	34 FEET	GOOD/FAIR	REMAIN
T2	WASHINGTON FAN PALM	Washingtonia robusta	12" to 14"	40 FEET	GOOD	REMOVE
T3	WASHINGTON FAN PALM	Washingtonia robusta	12" to 14"	30 FEET	GOOD	REMOVE
T4	WASHINGTON FAN PALM	Washingtonia robusta	12" to 14"	40 FEET	GOOD	REMOVE

TREE DISPOSITION PLAN NOTES:

1. COMPLIANCE WITH TREE DISPOSITION PLAN SHALL BE INCLUDED IN CONTRACTOR'S BID PRICE UNDER BID ITEM NO. 8 "DEMOLITION WORK AT PUMP STATION D–38."
2. T2 THROUGH T4 ARE EXEMPT FROM TREE REMOVAL PERMITTING.
3. CONTRACTOR SHALL PROVIDE TREE PROTECTION IN ACCORDANCE WITH CITY REQUIREMENTS FOR T1.
4. CONTRACTOR TO INSTALL PROTECTIVE FENCE BARRIER AROUND ALL EXISTING TREES TO REMAIN AT THE START OF THE PROJECT. FENCE TO REMAIN IN PLACE THROUGHOUT THE DURATION OF THE PROJECT.
5. CONTRACTOR SHALL TAKE EXTRA CARE DURING EARTHWORK AND UTILITY OPERATIONS TO PROTECT ALL EXISTING TREES AND SHALL BE RESPONSIBLE TO REPLACE ANY TREES DAMAGED DURING CONSTRUCTION.
6. BARRIER TO FORM A CONTINUOUS CIRCLE AROUND THE TREE OR GROUP OF TREES, REFER TO CITY OF FORT LAUDERDALE TREE PROTECTION DETAIL, SHEET C–8.

ELEVATIONS SHOWN HEREON ARE BASED ON THE NORTH AMERICAN VERTICAL DATUM 1988 (NAVD 1988)

Sunshine811.com

BID SET, NOT FOR CONSTRUCTION

Hazen

HAZEN AND SAWYER
4000 HOLLYWOOD BLVD, SUITE 750N
HOLLYWOOD, FLORIDA 33021
Certificate of Authorization No: 2771

THOMPSON & ASSOCIATES
CERTIFICATE OF AUTHORIZATION 28185
PO BOX 22398, FORT LAUDERDALE, FLORIDA 33335
MIAMI-DADE (786) 897.5919
BROWARD (954) 761.1073
PALM BEACH (561) 932.1668

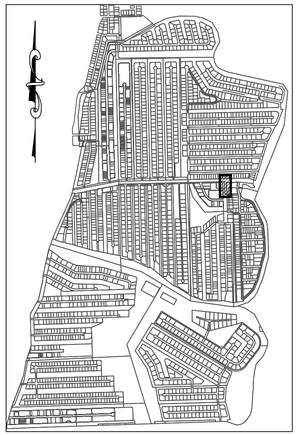

LEGEND:

INLET PROTECTION

DEMOLITION AREA

· X X X X X · TO BE REMOVED

ENGINEER:
NOEL RODRIGUEZ, P.E.
REG. No: 66390
DATE: 5/21/2019
TEL: 954–761–1073
FAX: 954–987–2949

DRAWN BY: NR | DATE: 11/27/2018
DESIGNED BY: NR | SCALE: 1" = 20'
CHECKED BY: JFT | FIELD BOOK: XXXX

CITY OF FORT LAUDERDALE
PUBLIC WORKS DEPARTMENT
ENGINEERING & ARCHITECTURE
100 North Andrews Avenue, Fort Lauderdale, Florida 33301

REVISIONS

NO.	DATE	BY	CHK'D	DESCRIPTION

PROJECT # 12390
SEWER DESIGN AND IMPLEMENTATION PROGRAM
PUMP STATION D-38
DEMOLITION PLAN AND SECTION

SHEET NO. C-1 OF 05
TOTAL: 25
CAD FILE: 43194–C01–PLAN
DRAWING FILE NO. 4–XXX–XX

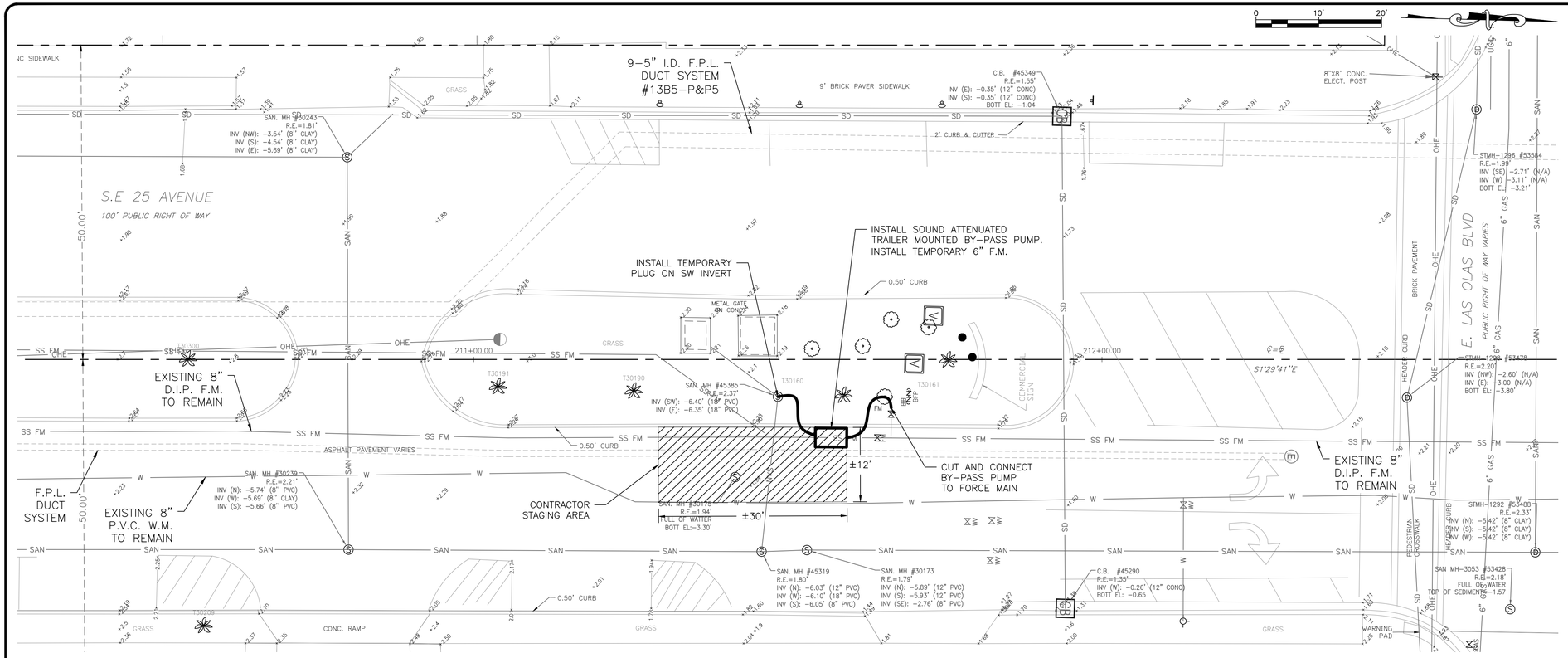

BY-PASS PUMPING PLAN

SCALE: 1"=10'

NOTES:

1. CONTRACTOR SHALL REPLACE SURROUNDING GROUND AFFECTED INCLUDING BUT NOT LIMITED TO PAVERS, CURB, SIDEWALK, SOD AND BRING IT TO EXISTING OR BETTER CONDITIONS.
2. EXISTING UTILITY DEPTHS ARE UNKNOWN UNLESS OTHERWISE INDICATED. LOCATIONS AND DEPTHS ARE ESTIMATES.
4. BY–PASS PUMP TO CONFORM TO THE CITY OF FORT LAUDERDALE NOISE CONTROL ORDINANCES (CHAPTER 17).
5. CONTRACTOR TO PROVIDE BACKUP BY–PASS PUMP DURING CONSTRUCTION.
6. CONTRACTOR SHALL MAINTAIN ADEQUATE MOT TO ALLOW VEHICULAR ACCESS, INCLUDING EMERGENCY VEHICLES.
7. CONTRACTOR SHALL PREPARE AND SUBMIT MAINTENANCE OF TRAFFIC PLAN (MOT) WHERE REQUIRED BY FEDERAL, STATE, COUNTY, OR LOCAL AGENCIES HAVING JURISDICTION. CONTRACTOR SHALL OBTAIN ALL REQUIRED APPROVALS AND PERMITS ASSOCIATED WITH THE MOT'S. ALL MOT'S TO BE ATS CERTIFIED.
8. THE TRAFFIC CONTROL PLANS FOR THE PROJECT SHALL COMPLY WITH THE LATEST EDITION OF THE FLORIDA DEPARTMENT OF TRANSPORTATION ROADWAY AND TRAFFIC DESIGN STANDARDS, INDEX NO. 600–660. MUTCD AND THE STANDARD SPECIFICATIONS. THE CONTRACTOR'S RESPONSE TIME TO ALL REPORTED MALFUNCTIONS OF TRAFFIC SIGNALS WITHIN THE PROJECT LIMITS SHALL BE NO MORE THAN TWO (2) HOURS AND SHALL RESTORE ALL MALFUNCTIONING TRAFFIC SIGNAL EQUIPMENT TO ITS LEVEL OF OPERATION PRIOR TO THE MALFUNCTIONING WITHIN TWENTY–FOUR (24) HOURS. DURING THIS TIME THE CONTRACTOR SHALL PROVIDE AT HIS EXPENSE TEMPORARY TRAFFIC CONTROL DEVICES, FLAGGLER PERSONNEL AND LAW ENFORCEMENT PERSONNEL AS NECESSARY TO MAINTAIN A SAFE AND EFFICIENT FLOW OF TRAFFIC AT THE AFFECTED WORK ZONE. THE ENGINEER OR THE CITY OF FORT LAUDERDALE SHALL APPROVE ALL MODIFICATIONS PRIOR TO THEIR IMPLEMENTATION.
9. EXISTING SIGNS AND PAVEMENT MARKINGS THAT CONFLICT WITH CONSTRUCTION SIGNS AND MARKINGS SHALL BE REMOVED DURING CONSTRUCTION. ALL EXISTING SIGNS THAT ARE REMOVED SHALL BE STOCKPILED IN A SECURE PLACE AND REINSTALLED AFTER CONSTRUCTION. REMOVE AND REPLACE ANY GROUND MOUNT SIGN BY USE OF INDEX NO. 611.
10. THE CONTRACTOR SHALL MAINTAIN EXISTING DRAINAGE PATTERNS AND PREVENT ADVERSE FLOODING OF THE TRAVEL LANES DURING CONSTRUCTION.
11. THE CONTRACTOR SHALL ALSO COORDINATE THE CONSTRUCTION SCHEDULE WITH FDOT, BROWARD COUNTY AND THE CITY OF FORT LAUDERDALE TO AVOID LANE CLOSURES WHICH WOULD ADVERSELY AFFECT TRAFFIC DURING RUSH HOUR.

ELEVATIONS SHOWN HEREON ARE BASED ON THE NORTH AMERICAN VERTICAL DATUM 1988 (NAVD 1988)

A[illegible]811 [illegible]d[illegible]r[illegible]d [illegible]d [illegible]d [illegible]d

Sunshine811.com

BID SET, NOT FOR CONSTRUCTION

Hazen

HAZEN AND SAWYER
4000 HOLLYWOOD BLVD, SUITE 750N
HOLLYWOOD, FLORIDA 33021

Certificate of Authorization No: 2771

THOMPSON & ASSOCIATES
CERTIFICATE OF AUTHORIZATION 28185
PO BOX 22398, FORT LAUDERDALE, FLORIDA 33335
MIAMI-DADE (786) 897.5919
BROWARD (954) 761.1073
PALM BEACH (561) 932.1668

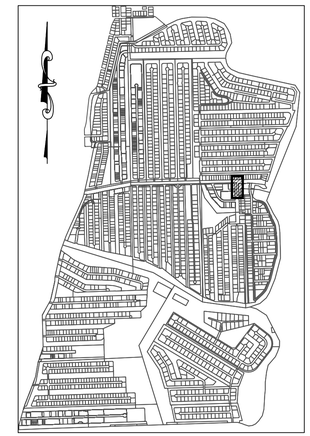

LEGEND:

CONTRACTOR STAGING AREA

ENGINEER:
NOEL RODRIGUEZ, P.E.
REG. No: 66390
DATE: 5/21/2019
TEL: 954-781-1073
FAX: 954-987-2949

DRAWN BY:	DATE:	
NR	11/27/2018	
DESIGNED BY:	SCALE:	
NR	1" = 10'	
CHECKED BY:		
JFT		
FIELD BOOK:		
XXXX		

CITY of FORT LAUDERDALE
PUBLIC WORKS DEPARTMENT
ENGINEERING & ARCHITECTURE
100 North Andrews Avenue, Fort Lauderdale, Florida 33301

REVISIONS

NO.	DATE	BY	CHK'D	DESCRIPTION

PROJECT # 12390
SEWER DESIGN AND IMPLEMENTATION PROGRAM
PUMP STATION D-38
BY-PASS PUMPING PLAN

SHEET NO.	OF
C-2	06

TOTAL: 25

CAD FILE: 43194-C02-PLAN

DRAWING FILE NO. 4-XXX-XX

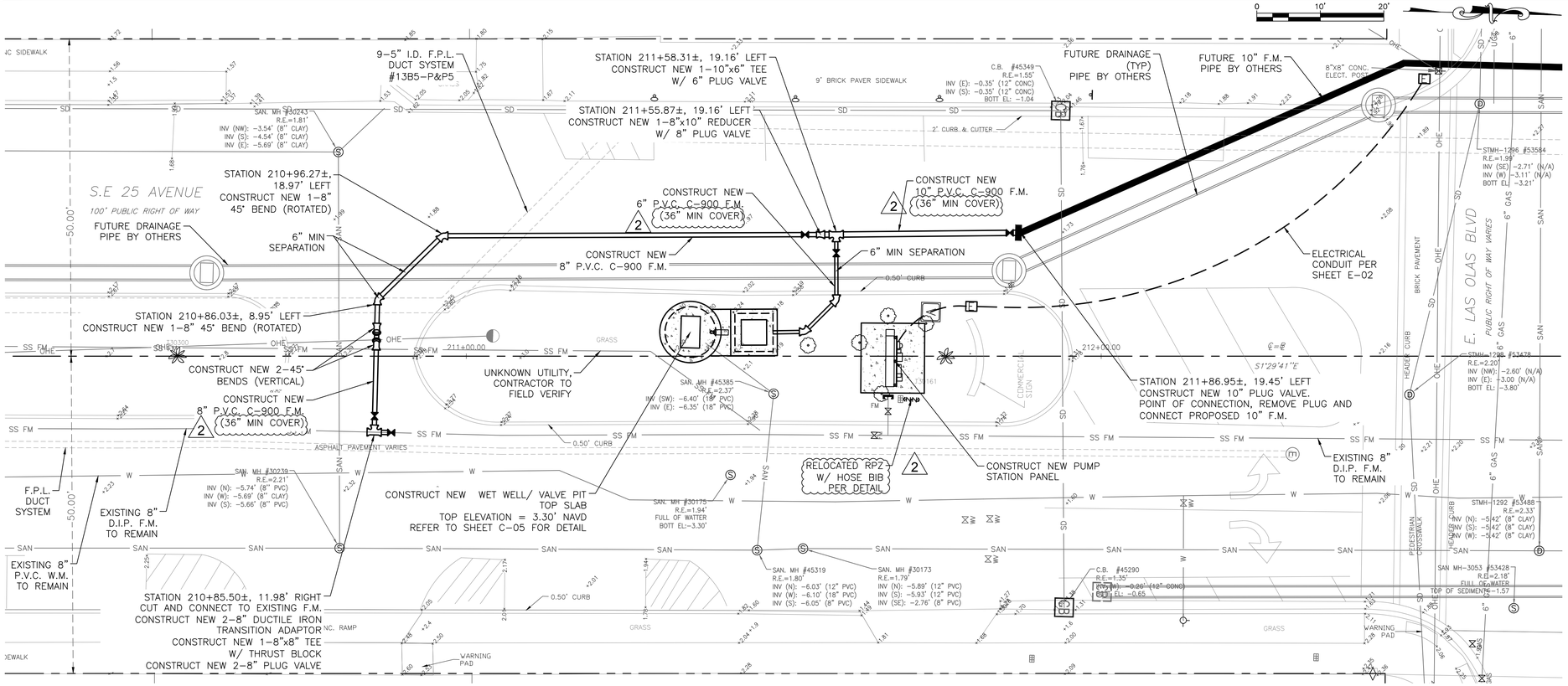

PLAN

SCALE: 1"=10'

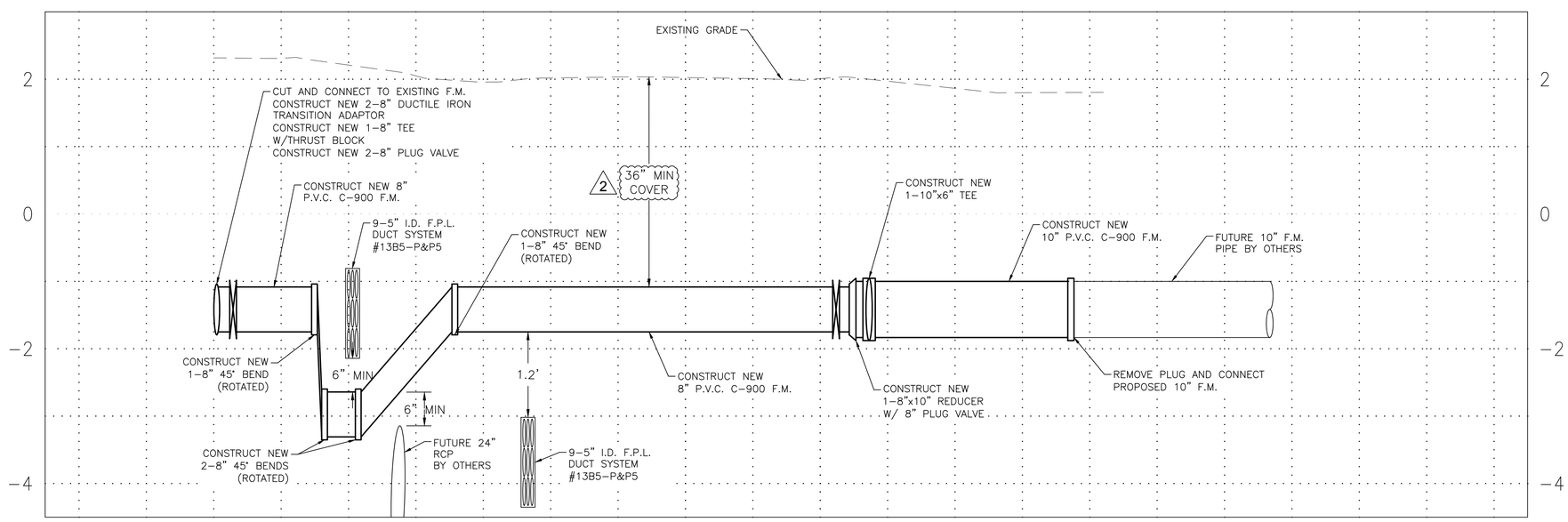

PROFILE

VERTICAL 1"=2'
HORIZONTAL 1"=20'

Hazen

HAZEN AND SAWYER
4000 HOLLYWOOD BLVD, SUITE 750N
HOLLYWOOD, FLORIDA 33021

Certificate of Authorization No: 2771

THOMPSON & ASSOCIATES
CERTIFICATE OF AUTHORIZATION 28185
PO BOX 22398, FORT LAUDERDALE, FLORIDA 33335
MIAMI-DADE (786) 897.5919
BROWARD (954) 761.1073
PALM BEACH (561) 932.1668

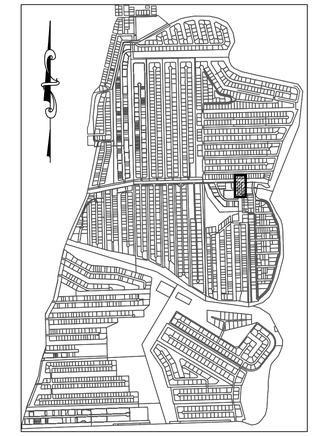

NOTES:

1. CONTRACTOR SHALL REPLACE SURROUNDING GROUND AFFECTED INCLUDING BUT NOT LIMITED TO PAVERS, CURB, SIDEWALK, SOD, AND BRING IT TO EXISTING OR BETTER CONDITIONS.
2. EXISTING UTILITY DEPTHS ARE UNKNOWN UNLESS OTHERWISE INDICATED. LOCATIONS AND DEPTHS ARE ESTIMATES.
3. ALL PROPOSED PIPE TO BE RESTRAINED JOINT.

ELEVATIONS SHOWN HEREON ARE BASED ON THE NORTH AMERICAN VERTICAL DATUM 1988 (NAVD 1988)

A□□□ □□□811 □□ □ □□□□□□□□□□d□□□ □□□□r□ □□□
d□ □□ □□□□ □□d□r□□□d □□□□□□ □□□□□d □□d □ □r□d

Sunshine811.com

BID SET, NOT FOR CONSTRUCTION

ENGINEER:
NOEL RODRIGUEZ, P.E.
REG. No: 86390
DATE 5/21/2019
TEL: 954-761-1073
FAX: 954-987-2949

DRAWN BY:	DATE:	DESIGNED BY:	SCALE:	CHECKED BY:	FIELD BOOK:
NR	11/27/2018	NR	1" = 20'	JFT	XXXX

CITY of FORT LAUDERDALE
PUBLIC WORKS DEPARTMENT
ENGINEERING & ARCHITECTURE
100 North Andrews Avenue, Fort Lauderdale, Florida 33301

REVISIONS

NO.	DATE	BY	CHK'D	DESCRIPTION
2	05/02/19	NR	JFT	BC EPGMD

PROJECT # 12390
SEWER DESIGN AND IMPLEMENTATION PROGRAM
PUMP STATION D-38
FORCE MAIN PLAN AND PROFILE

SHEET NO.	OF
C-3	07

TOTAL: 25

CAD FILE: 43194-C03-PLAN

DRAWING FILE NO. 4-XXX-XX

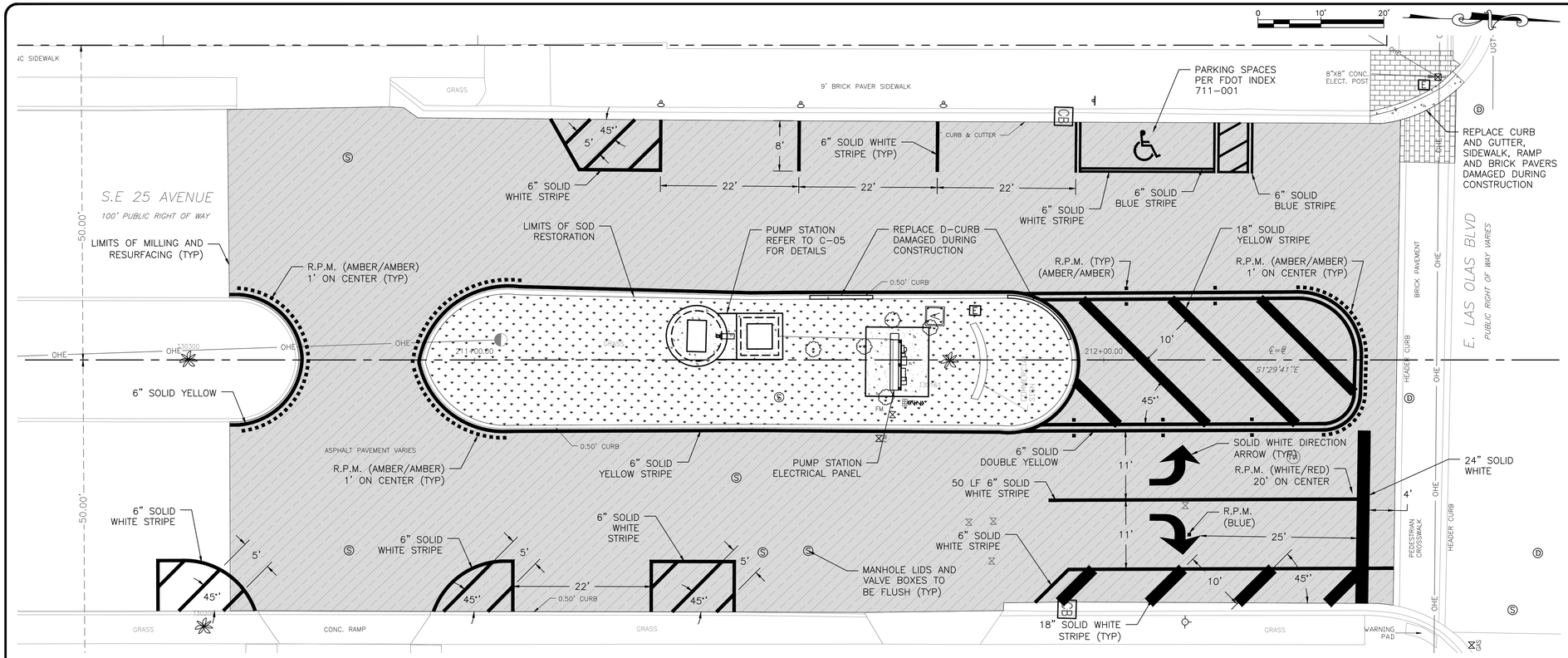

RESTORATION PLAN

SCALE: 1"=10'

LEGEND:

- BRICK PAVEMENT
- CONCRETE
- MILL & RESURFACE
- SOD RESTORATION

NOTES:

1. CONTRACTOR SHALL REPLACE SURROUNDING GROUND AFFECTED INCLUDING BUT NOT LIMITED TO PAVERS, CURB, SIDEWALK, SOD, AND BRING IT TO EXISTING OR BETTER CONDITIONS.
2. CONTRACTOR TO SUBMIT SIGN AND SEALED LANDSCAPE AND IRRIGATION PLANS TO THE CITY FOR APPROVAL.
3. SIDEWALK, RAMP AND CURBS TO BE REPAIRED PER FDOT SPECIFICATIONS.

ELEVATIONS SHOWN HEREON ARE BASED ON THE NORTH AMERICAN VERTICAL DATUM 1988 (NAVD 1988)

Sunshine811.com

BID SET, NOT FOR CONSTRUCTION

Hazen

HAZEN AND SAWYER
4000 HOLLYWOOD BLVD, SUITE 750N
HOLLYWOOD, FLORIDA 33021
Certificate of Authorization No: 2771

THOMPSON & ASSOCIATES
CERTIFICATE OF AUTHORIZATION 28185
PO BOX 22398, FORT LAUDERDALE, FLORIDA 33335
MIAMI-DADE (786) 897.5919
BROWARD (954) 761.1073
PALM BEACH (561) 932.1668

ENGINEER: NOEL RODRIGUEZ, P.E.
REG. No: 66390
DATE: 5/21/2019
TEL: 954-761-1073
FAX: 954-987-2949

DRAWN BY:	DATE: 11/27/2018
NR	
DESIGNED BY: NR	SCALE: N/A
CHECKED BY: JFT	FIELD BOOK: XXXX

CITY OF FORT LAUDERDALE
PUBLIC WORKS DEPARTMENT
ENGINEERING & ARCHITECTURE
100 North Andrews Avenue, Fort Lauderdale, Florida 33301

REVISIONS

NO.	DATE	BY	CHK'D	DESCRIPTION

PROJECT # 12390
SEWER DESIGN AND IMPLEMENTATION PROGRAM
PUMP STATION D-38
RESTORATION PLAN

SHEET NO.	OF
C-4	08

TOTAL: 25

CAD FILE: 43194-C04-PLAN

DRAWING FILE NO. 4-XXX-XX

PLOT DATE: 5/21/2019 3:39 PM BY: T&A-NRODRIGUEZ

File = C:\bms\hazen-pw\dms77138\43194-C04-PLAN Saved by T&A-NRodriguez Save date = 5/21/2019 4:04 PM

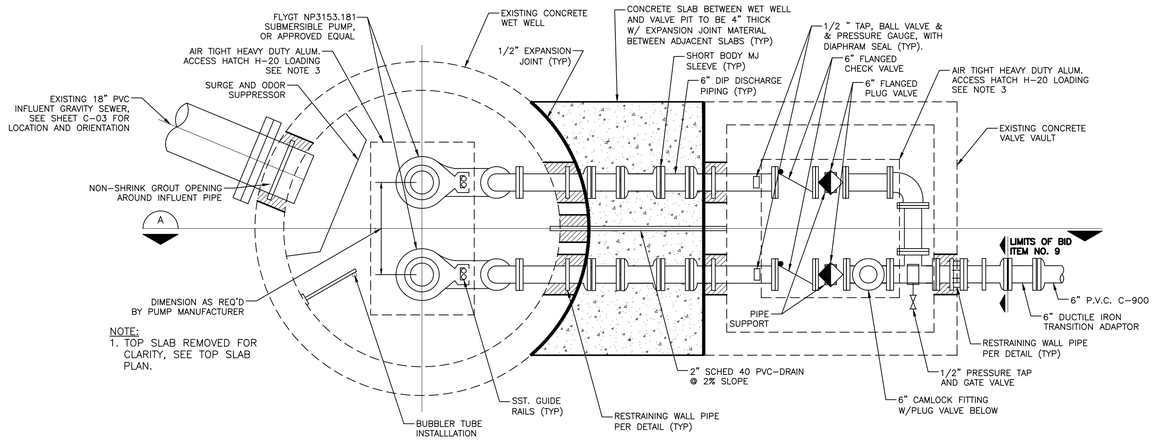

PUMP STATION DETAIL

NTS

ELEVATIONS (FEET–NAVD)

LETTER	LEVEL DESCRIPTION	
A	TOP OF EXISTING PUMP STATION & VAULT SLABS	3.30
B	FINISH GRADE ADJACENT SLAB	2.80
C	INFLUENT GRAVITY SEWER INVERT	(–)7.10
D	HIGH WATER ALARM	(–)8.10
E	LAG PUMP ON	(–)8.60
F	LEAD PUMP ON	(–)9.35
G	PUMPS OFF	(–)11.35
H	EXISTING WET WELL FLOOR	(–)12.60
	EXISTING INSIDE DIA. PUMP STATION	8'
	FORCE MAIN PIPING (D.I.P.)	6"
	PUMP OPERATION REQUIREMENTS	576 gpm @ 63.2' 15 HP

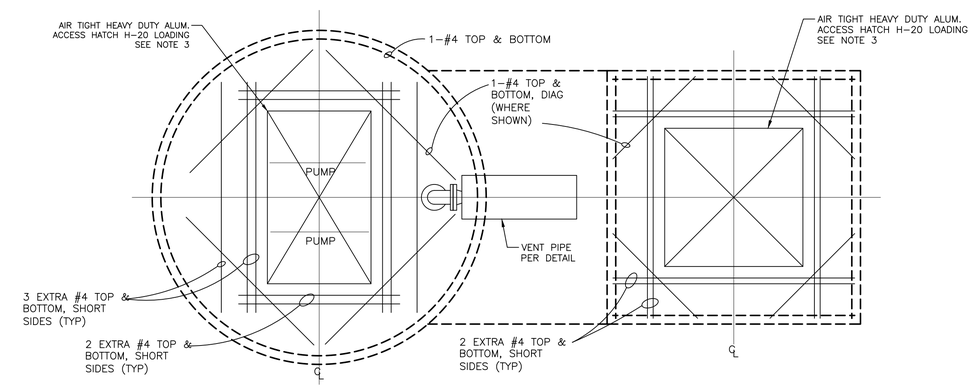

TOP SLAB DETAIL

NTS

NOTES:

1. VARIES– CONTRACTOR TO ORDER WALL PIPE WITH DIMENSIONS NECESSARY TO CENTER COLLAR IN WALL & PLACE FLANGE AT DESIRED LOCATION.
2. APPLY APPROVED WATERPROOF BONDING AGENT TO EXISTING CONCRETE SURFACE BEFORE PLACING NON–SHRINK GROUT, DRY PACK FROM EARTH SIDE, APPLY APPROVED WATERPROOF COATING AS SPECIFIED TO ELIMINATE SEEPAGE INTO VAULT OR WET WELL FROM PIPE/CONDUIT PENETRATIONS.
3. HATCHES TO BE EQUIPPED WITH AUTOMATIC HOLD OPEN ARMS, HORIZONTAL COMPRESSION SPRINGS, WATERTIGHT SLAM LOCKS, RECESSED OVERSIZE PADLOCK BOX, ODOR REDUCING GASKET AND SAFETY CHAINS. HINGES TO BE ATTACHED USING TAMPER PROOF CARRIAGE BOLTS WITH WELDED NUTS. WETWELL AND VALVE VAULT HATCHES SHALL BE US FOUNDARY ALUMINUM HATCHES OR APPROVED EQUAL. ALL HARDWARE SHALL BE STAINLESS STEEL.
4. BUBBLER TUBE INSTALL USING SST PIPESTRAPS & SST UNISTRUT.
5. ALL BOLTS, NUTS, BRACKETS, AND SUPPORT PIECES IN WET WELL TO BE STAINLESS STEEL

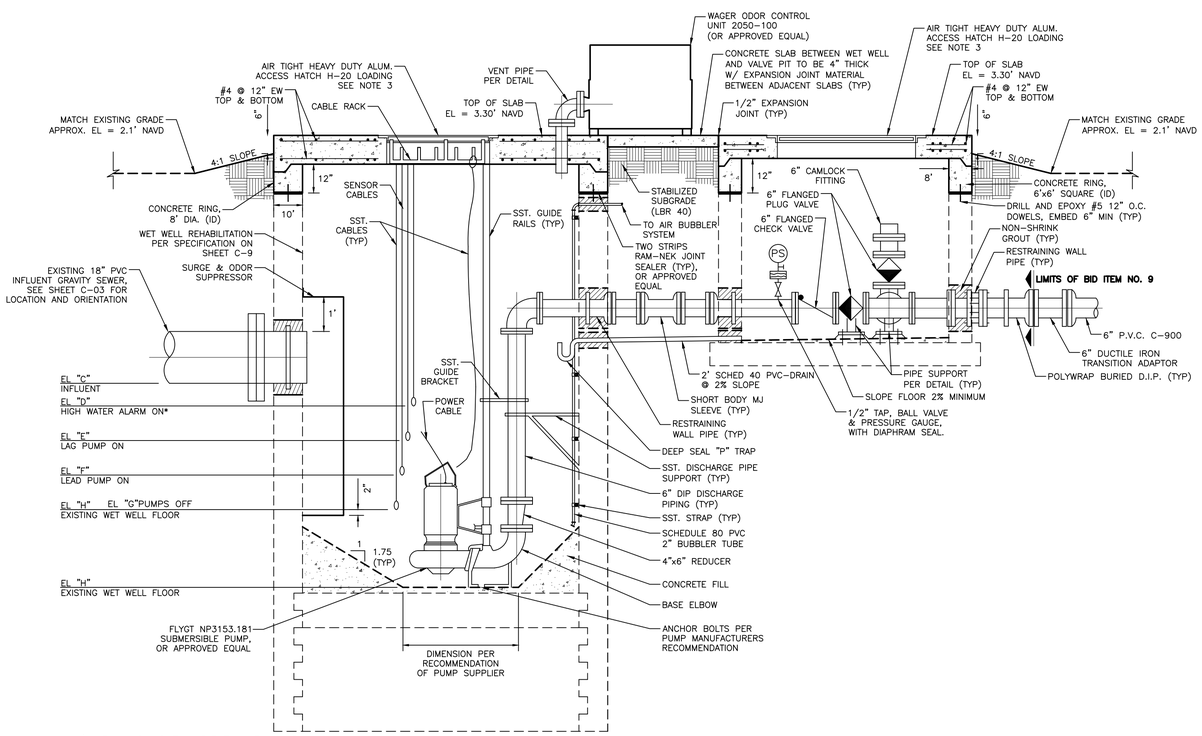

* (ALARM HAS LIGHT, AUDIBLE ALARM, AND DIALER RTU TO CITY: ALARM WILL BE DEACTIVATED BY A MANUAL SWITCH)

SECTION A

NTS

Hazen

HAZEN AND SAWYER
4000 HOLLYWOOD BLVD, SUITE 750N
HOLLYWOOD, FLORIDA 33021

Certificate of Authorization No: 2771

THOMPSON & ASSOCIATES
CERTIFICATE OF AUTHORIZATION 28185
PO BOX 22398, FORT LAUDERDALE, FLORIDA 33335
MIAMI-DADE (786) 897.5919
BROWARD (954) 761.1073
PALM BEACH (561) 932.1668

ENGINEER: NOEL RODRIGUEZ, P.E.
REG. No: 48480
DATE: 5/21/2019
TEL: 954-761-1073
FAX: 954-987-2949

DRAWN BY: NR
DATE: 11/27/2018
DESIGNED BY: NR
SCALE: N/A
CHECKED BY: JFT
FIELD BOOK: XXXX

CITY OF FORT LAUDERDALE
PUBLIC WORKS DEPARTMENT
ENGINEERING & ARCHITECTURE
100 North Andrews Avenue, Fort Lauderdale, Florida 33301

REVISIONS

NO.	DATE	BY	CHK'D	DESCRIPTION

BID SET, NOT FOR CONSTRUCTION

PROJECT # 12390
SEWER DESIGN AND IMPLEMENTATION PROGRAM
PUMP STATION D-38
PUMP STATION DETAILS

SHEET NO. C-5 OF 09
TOTAL: 25
CAD FILE: 43194-C05-DETL
DRAWING FILE NO. 4-XXX-XXX-XXX

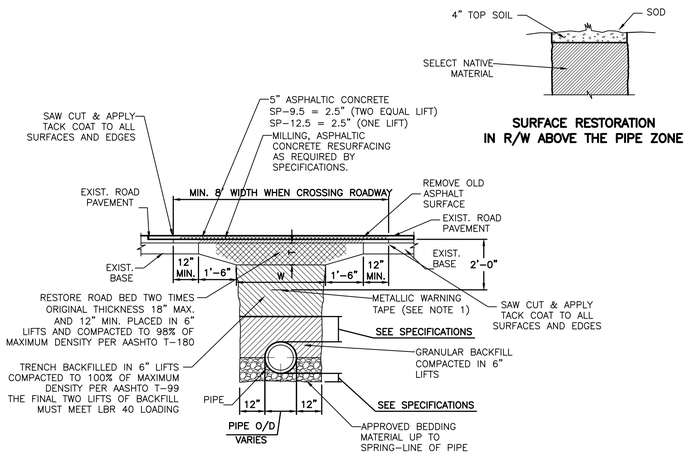

NOTES:

1. METALLIC WARNING TAPES SHALL BE INSTALLED 24" BELOW FINISH GRADE ABOVE MAIN.
2. UNLESS OTHERWISE SPECIFIED SELECTED MATERIAL SHALL BE FREE OF STONES LARGER THAN 3/8" DIA.
3. REPLACE ALL LANE MARKINGS AND REFLECTIVE MARKERS.
4. WHERE ORGANIC MATERIALS ARE ENCOUNTERED, MATERIALS SHOULD BE OVER-EXCAVATED AND REPLACED WITH SUITABLE FILL. CONTRACTOR TO UTILIZE WOVEN POLYPROPYLENE GEOTEXTILE FABRIC, REFER TO GEOTECHNICAL REPORT.

T=6" PARKING
T=8" RESIDENTIAL STREETS
T=10" MAJOR STREETS (4 LANE)
T=12" MAJOR STREETS (6 LANE)

2T=18" MAX. 12" MIN.

100 TYPICAL TRENCH AND PAVEMENT RESTORATION FOR TRANSVERSE CROSSING

Scale: 1' = 3'

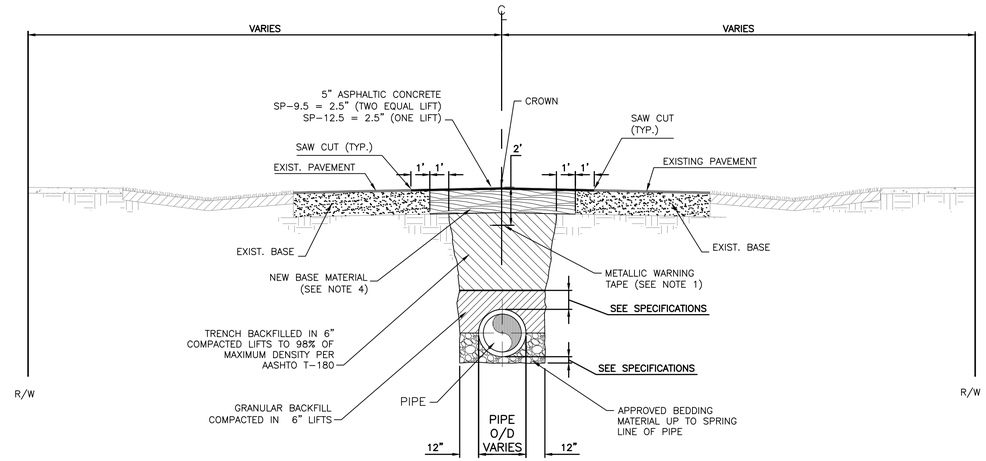

NOTES:

1. 2" WIDE METALLIC WARNING TAPES SHALL BE INSTALLED 24" BELOW FINISH GRADE.
2. UNLESS OTHERWISE SPECIFIED SELECTED MATERIAL SHALL BE FREE OF STONES LARGER THAN 3/8" DIA.
3. REPLACE ALL LANE MARKINGS AND REFLECTIVE MARKERS.
4. 12" MIN. LIMEROCK BASE PLACED IN 6" LAYERS AND COMPACTED TO 98% OF MAXIMUM DENSITY PER AASHTO T-180.
5. WHERE ORGANIC MATERIALS ARE ENCOUNTERED, MATERIALS SHOULD BE OVER-EXCAVATED AND REPLACED WITH SUITABLE FILL. CONTRACTOR TO UTILIZE WOVEN POLYPROPYLENE GEOTEXTILE FABRIC, REFER TO GEOTECHNICAL REPORT.

100A TYPICAL ROAD SECTION, TYPICAL TRENCH AND TRENCH RESTORATION FOR PARALLEL PIPE TRENCH

Scale: 1' = 4'

Hazen

HAZEN AND SAWYER
4000 HOLLYWOOD BLVD, SUITE 750N
HOLLYWOOD, FLORIDA 33021

Certificate of Authorization No: 2771

THOMPSON & ASSOCIATES
CERTIFICATE OF AUTHORIZATION 28185
PO BOX 22398, FORT LAUDERDALE, FLORIDA 33335
MIAMI-DADE (786) 897.5919
BROWARD (954) 761.1073
PALM BEACH (561) 932.1668

ENGINEER: NOEL RODRIGUEZ, P.E.
LICENSE NO. 48830
DATE: 5/21/2019
TEL: 954-761-1073
FAX: 954-987-2949

DRAWN BY: NR
DATE: 11/27/2018
DESIGNED BY: NR
SCALE: N/A
CHECKED BY: JFT
FIELD BOOK: XXXX

CITY OF FORT LAUDERDALE
PUBLIC WORKS DEPARTMENT
ENGINEERING & ARCHITECTURE
100 North Andrews Avenue, Fort Lauderdale, Florida 33301

REVISIONS

NO.	DATE	BY	CHK'D	DESCRIPTION

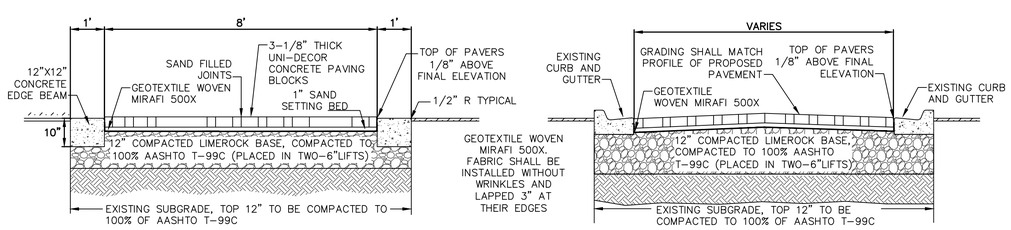

CROSS SECTION

LONGITUDINAL SECTION

NOTES:

1) CONTRACTOR SHALL GIVE SPECIAL ATTENTION TO ACHIEVE COMPACTION REQUIREMENTS AT AREAS ADJACENT TO EDGE RESTRAINTS, CATCH BASINS, AND UTILITY STRUCTURES.
2) CONTRACTOR SHALL FORM THE INTENDED SURFACE PROFILE OF THE BASE SO THAT THE PAVERS CAN BE PLACED ON A UNIFORM THICKNESS OF BEDDING SAND.
3) SURFACE OF COMPACTED BASE SHALL BE SMOOTH WITH A SURFACE SMOOTHNESS MAXIMUM TOLERANCE OF +/- 3/8" OVER A 10' STRAIGHTEDGE. UNEVEN AREAS OF THE LIMEROCK BASE SURFACE MUST BE MADE LEVEL PRIOR TO PLACING THE BEDDING SAND. BEDDING SAND SHALL NOT BE USED TO COMPENSATE FOR AN UNEVEN BASE.
4) CONTRACTOR SHALL ENSURE THAT ALL SURROUNDINGS CONTAINING EDGES, AND COMPACTED BASE ARE COMPLETED PRIOR TO INITIATING PAVER INSTALLATION.
5) BEDDING SAND SHALL CONFORM TO ASTMC33 (CONCRETE SAND) WITH 0% PASSING NO.200 SIEVE. SPREAD BEDDING SAND AT OPTIMUM MOISTURE CONTENT EVENLY OVER BASE AND SCREED SAND TO AN EVEN THICKNESS OF 1" (+/- 3/16in.). THE SCREEDED SAND SHOULD NOT BE DISTURBED.
6) LAY PAVERS IN THE PATTERN INDICATED. MAINTAIN STRAIGHT JOINT LINES. JOINTS BETWEEN PAVERS SHALL BE CONSISTENT AND BETWEEN 1/16 TO 1/8 INCH WIDE.
7) AFTER AN AREA OF PAVERS ARE PLACED, IT SHALL BE COMPACTED WITH A VIBRATING PLATE COMPACTOR, EXERTING 5000 LBS. OF CENTRIFUGAL COMPACTION FORCE, WITH SURFACE CLEAN AND JOINTS UNSANDED. A MINIMUM OF THREE PASSES SHALL BE MADE. PLATE VIBRATOR SHALL HAVE A RUBBER MAT OR ROLLER FEET TO AVOID CHIPPING THE PAVERS.
8) JOINT SAND SHALL BE FINER THAN THE BEDDING SAND TO FACILITATE FILLING OF THE JOINTS. THIS CAN OBTAINED BY PASSING THE BEDDING SAND THROUGH A No. 8 SIEVE. AFTER THE FIRST PASS OF THE PLATE COMPACTOR, DRY JOINT SAND SHALL BE SWEPT INTO THE JOINTS AND THE PAVERS COMPACTED, REPEAT THE PROCESS UNTIL THE JOINTS ARE FILLED WITH SAND. WET SAND SHALL NOT BE INSTALLED.
9) CONTRACTOR SHALL LEAVE TOP OF PAVERS 3/16" ABOVE FINAL ELEVATION TO COMPENSATE FOR POSSIBLE MINOR SETTLING.
10) ALL CUTS TO BE VERTICAL AND TRUE, NO EDGE PIECE TO BE SMALLER THAN 1/3 FULL PAVER SIZE.

101 PAVERS WITH LIMESTONE BASE DETAIL

N.T.S.

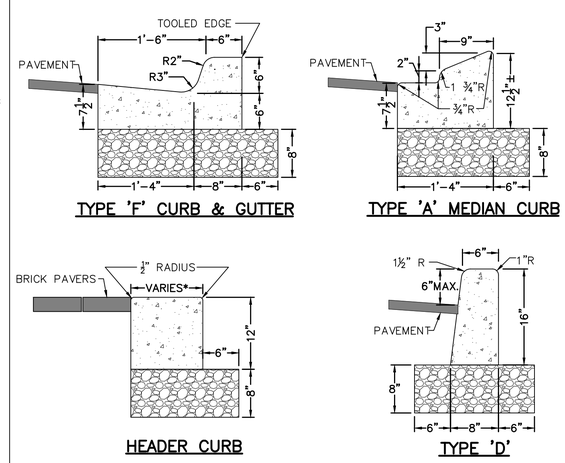

NOTE:

1. ALL CURBS MUST HAVE AN 8" THICK MINIMUM STABILIZED LIMEROCK BASE, COMPACTED TO 98% MAX. DENSITY PER AASHTO T-180.
2. ALL CONCRETE STRENGTH TO BE 3000 P.S.I.

102 CURB DETAILS

N.T.S.

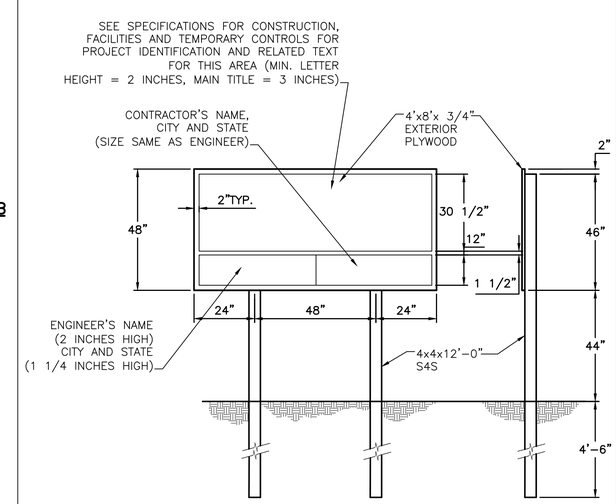

NOTE:
LETTERS SHALL BE HELVETICA MEDIUM BLUE (PANTONE 301) ON WHITE BACKGROUND. BORDER SHALL BE BLUE (PANTONE 301)

103 PROJECT SIGN

N.T.S.

BID SET, NOT FOR CONSTRUCTION

PROJECT # 12390
SEWER DESIGN AND IMPLEMENTATION PROGRAM
PUMP STATION D-38
RESTORATION DETAILS

SHEET NO. C-6 OF 10
TOTAL: 25
CAD FILE: 43194-C06-DETL
DRAWING FILE NO. 4-XXX-XXX-XXX

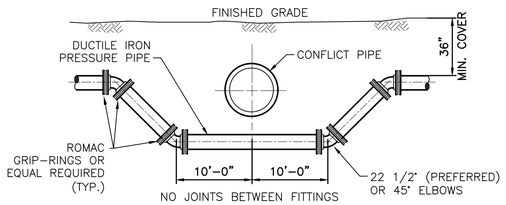

FITTING TYPE

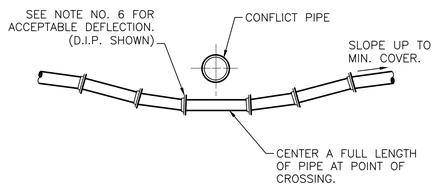

DEFLECTION TYPE

NOTES:

1. STORM SEWER, GRAVITY WASTEWATER AND RECLAIMED WATER MAIN CROSSING UNDER POTABLE WATER MAINS SHALL BE LAID TO PROVIDE A MINIMUM VERTICAL DISTANCE OF EIGHTEEN (18) INCHES BETWEEN THE INVERT OF THE UPPER PIPE AND THE CROWN OF THE LOWER PIPE. WHERE THIS MINIMUM SEPARATION CANNOT BE MAINTAINED, THE CROSSING SHALL BE ARRANGED SO THAT THE STORM/WASTEWATER/RECLAIMED WATER PIPE JOINTS AND POTABLE WATER MAIN JOINTS ARE EQUIDISTANT FROM THE POINT OF CROSSING WITH NO LESS THAN TEN (10) FEET BETWEEN ANY TWO JOINTS, BOTH PIPES SHALL BE D.I.P., AND THE MINIMUM VERTICAL SEPARATION SHALL BE D.I.P. IRRESPECTIVE OF SEPARATION. D.I.P. IS NOT REQUIRED FOR STORM SEWERS.
2. MAINTAIN MIN. TEN (10) FEET HORIZONTAL DISTANCE BETWEEN POTABLE WATER MAIN AND STORM SEWER, WASTEWATER MAIN, OR FORCE MAIN. MAINTAIN MIN. THREE (3) FEET HORIZONTAL DISTANCE (WALL TO WALL) BETWEEN RECLAIMED WATER MAIN AND POTABLE WATER MAIN, STORM SEWER, WASTEWATER GRAVITY MAIN OR FORCE MAIN.
3. FORCE MAIN CROSSING POTABLE WATER MAIN OR RECLAIMED WATER MAIN SHALL BE LAID TO PROVIDE A MINIMUM VERTICAL DISTANCE OF EIGHTEEN (18) INCHES BETWEEN THE OUTSIDE OF THE FORCE MAIN AND OUTSIDE OF THE POTABLE WATER MAIN OR RECLAIMED WATER MAIN WITH THE POTABLE WATER MAIN OR RECLAIMED WATER MAIN CROSSING OVER THE FORCE MAIN.
4. FITTINGS SHALL BE RESTRAINED.
5. THE DEFLECTION TYPE CROSSING IS PREFERRED.
6. DO NOT EXCEED 75% OF MANUFACTURER'S RECOMMENDED MAXIMUM JOINT DEFLECTION FOR DUCTILE IRON PIPE. NO DEFLECTION AT THE JOINT IS ALLOWED FOR P.V.C. PIPE. BENDING OF P.V.C. PIPE SHALL NOT EXCEED THE FOLLOWING PARAMETERS:

PVC PIPE SIZE (INCH)	MIN. ALLOWED RADIUS (FT.)	MAX. DEFLECTION (INCH) PER 20' LENGTH
6"	300	8"
8"	400	6"
10"	600	4"
12"	600	4"

400 PRESSURE PIPE CONFLICT DETAIL

Scale: 1" = 10'

401 PRESSURE PIPE CONFLICT NOTES

Scale: N/A

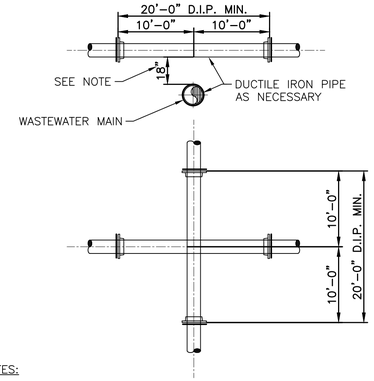

NOTES:

1. STORM SEWER, GRAVITY WASTEWATER AND RECLAIMED WATER MAIN CROSSING UNDER POTABLE WATER MAINS SHALL BE LAID TO PROVIDE A MINIMUM VERTICAL DISTANCE OF EIGHTEEN (18) INCHES BETWEEN THE INVERT OF THE UPPER PIPE AND THE CROWN OF THE LOWER PIPE. WHERE THIS MINIMUM SEPARATION CANNOT BE MAINTAINED, THE CROSSING SHALL BE ARRANGED SO THAT THE STORM/WASTEWATER/RECLAIMED WATER PIPE JOINTS AND POTABLE WATER MAIN JOINTS ARE EQUIDISTANT FROM THE POINT OF CROSSING WITH NO LESS THAN TEN (10) FEET BETWEEN ANY TWO JOINTS, BOTH PIPES SHALL BE D.I.P., AND THE MINIMUM VERTICAL SEPARATION SHALL BE 6 INCHES. WHERE THERE IS NO ALTERNATIVE TO STORM/WASTEWATER/RECLAIMED WATER PIPES CROSSING OVER A POTABLE WATER MAIN, THE CRITERIA FOR MINIMUM 18" VERTICAL SEPARATION BETWEEN LINES AND JOINT ARRANGEMENT, AS STATED ABOVE, SHALL BE REQUIRED, AND BOTH PIPES SHALL BE D.I.P. IRRESPECTIVE OF SEPARATION. D.I.P. IS NOT REQUIRED FOR STORM SEWERS.
2. MAINTAIN MIN. TEN (10) FEET HORIZONTAL DISTANCE BETWEEN POTABLE WATER MAIN AND STORM SEWER, WASTEWATER MAIN, OR FORCE MAIN. MAINTAIN MIN. THREE (3) FEET HORIZONTAL DISTANCE (WALL TO WALL) BETWEEN RECLAIMED WATER MAIN AND POTABLE WATER MAIN, STORM SEWER, WASTEWATER GRAVITY MAIN OR FORCE MAIN.
3. FORCE MAIN CROSSING POTABLE WATER MAIN OR RECLAIMED WATER MAIN SHALL BE LAID TO PROVIDE A MINIMUM VERTICAL DISTANCE OF EIGHTEEN (18) INCHES BETWEEN THE OUTSIDE OF THE FORCE MAIN AND OUTSIDE OF THE POTABLE WATER MAIN OR RECLAIMED WATER MAIN WITH THE POTABLE WATER MAIN OR RECLAIMED WATER MAIN CROSSING OVER THE FORCE MAIN.

402 STANDARD WATER AND SEWER SEPARATION DETAIL

Scale: 1" = 10'

I. FORCE MAIN AND WATER MAIN OUTSIDE OF WELLFIELD PROTECTION ZONE

MAXIMUM QUANTITY OF WATER (GALLONS PER HOUR) THAT MAY BE SUPPLIED TO MAINTAIN PRESSURE WITHIN 5 P.S.I. OF THE SPECIFIED TEST PRESSURE.

(MECHANICAL OR PUSH-ON JOINT, 18 FT. NOMINAL LENGTHS, PER 1000 FT. OF PIPE)

AVG. TEST PRESSURE	PIPE DIAMETER (INCHES)												
PSI	2	3	4	6	8	10	12	14	16	18	20	24	30
150	0.10	0.14	0.18	0.27	0.37	0.46	0.55	0.64	0.73	0.83	0.92	1.10	1.38

NOTES:

1. TO OBTAIN THE MAXIMUM QUANTITY OF WATER FOR PIPE WITH 20 FT. NOMINAL LENGTHS, MULTIPLY THE QUANTITY CALCULATED FROM THE TABLE BY 0.9.<<
2. THE MAXIMUM QUANTITY OF ADDED WATER FOR A PIPELINE IS CALCULATED BY MULTIPLYING THE QUANTITY PER HOUR AS OBTAINED FROM THE ABOVE TABLE, BY THE DURATION OF THE TEST IN HOURS, AND BY THE TOTAL LENGTH OF THE LINE BEING TESTED DIVIDED BY 1,000. IF THE LINE UNDER TEST CONTAINS SECTIONS OF VARIOUS DIAMETERS, THE MAXIMUM QUANTITY ADDED WILL BE THE SUM OF THE COMPUTED QUANTITIES FOR EACH SIZE.<<
3. MAXIMUM TEST LENGTH = 2,500 FEET PER SECTION.<<
4. THIS STANDARD SHALL REFLECT ANY REVISION OF A.W.W.A. C-600-05. HOWEVER, THE MAXIMUM QUANTITY OF WATER ADDED SHALL NOT EXCEED 50% OF RECOMMENDED LIMIT PER APPLICABLE AWWA C-600-05 STANDARD.<<
5. STANDARD TEST PRESSURE = 150 P.S.I.
6. FORMULA BASIS: $L = \frac{(S)x(D)x(P)^{\frac{1}{2}}}{148{,}000}$ 1

   L = MAXIMUM QUANTITY OF WATER TO BE ADDED (GALLONS PER HOUR)
   S = LENGTH OF PIPE TESTED (FEET)
   D = DIAMETER OF PIPE (INCHES)
   P = TEST PRESSURE (P.S.I.)
7. PRESSURE TEST DURATION TO BE MIN. 2 HOURS.
8. DISINFECTION OF MAINS SHALL COMPLY WITH A.N.S.I./A.W.W.A. C-651-05 STANDARD.
9. DUCTILE IRON WATER MAIN PIPE SHALL CONFORM TO THE REQUIREMENTS OF A.N.S.I./A.W.W.A. C-151-'02.

II. FORCE MAIN AND WATER MAIN WITHIN WELLFIELD PROTECTION ZONE.

NOTES:

1. PRESSURE TEST PROCEDURE TO FOLLOW THE CURRENT AWWA C-600-05 STANDARD (150psi, (2) HOUR DURATION). THERE SHALL BE NO PRESSURE DROP IN THE PIPE DURING THE TEST ("ZERO" FILL-UP TOLERANCE).

2 403 PRESSURE TEST CRITERIA

Scale: N/A

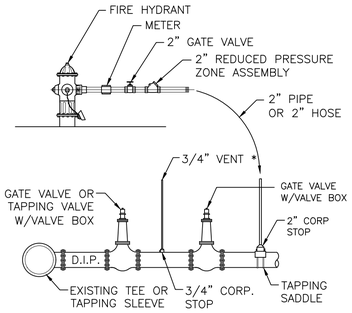

* NOTE: AFTER TESTS REMOVE 3/4" TUBING AND 2" GALVANIZED PIPE AND INSTALL PLUGS ON CORPORATION STOPS.

2 404 FILLING CONNECTION

Scale: N.T.S.

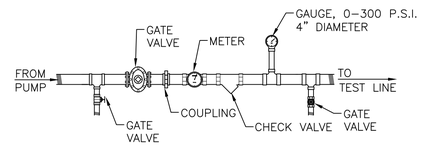

NOTE:
PRESSURE TEST TO INCLUDE SERVICES TO ANGLE STOP.

2 405 PRESSURE TEST DETAIL

Scale: N.T.S.

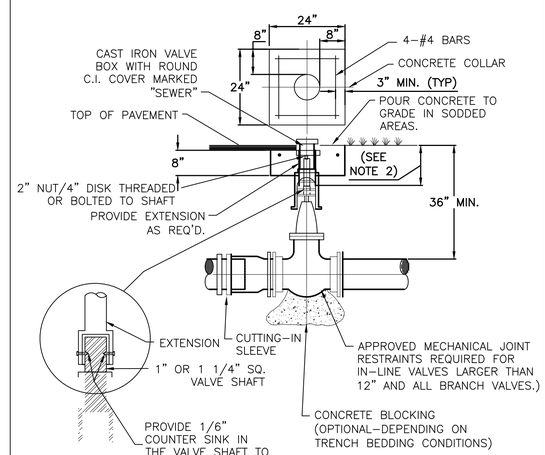

NOTES:

1. CONCRETE COLLAR IS NOT REQUIRED IN PAVED AREAS IF PAVEMENT SURFACE IS FINISHED PRIOR TO CONDITIONAL FINAL INSPECTION.
2. WHEN VALVE NUT IS DEEPER THAN 36" AN EXTENSION WITH UNIVERSAL JOINT SHALL BE REQUIRED TO BRING OPERATING NUT 24"-30" BELOW FINISHED GRADE. EXTENSION BOLTS & NUTS SHALL BE 316 STAINLESS STEEL. A 316 STAINLESS STEEL CENTERING PLATE SHALL ALSO BE REQUIRED.
   VALVE BOXES SHALL HAVE LOCKING COVERS MARKED "SEWER" OR "WATER".
3. EXTENSION RISER TO BE D.I.P.
4. AT DEAD END OR WHERE MAIN LINES CHANGE DIRECTION, VALVES SHALL BE RESTRAINED USING MECHANICAL JOINT RESTRAINT.

406 TYPICAL VALVE DETAIL

Scale: 1" = 2'

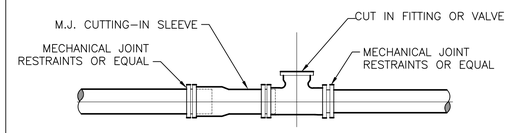

DUCTILE IRON-MECHANICAL JOINT (FORCE MAIN)

1. MECHANICAL JOINTS RESTRAINTS ARE REQUIRED THROUGHOUT ASSEMBLY.

407 PRESSURE PIPE STANDARD CUT-IN DETAIL

Scale: 1" = 10'

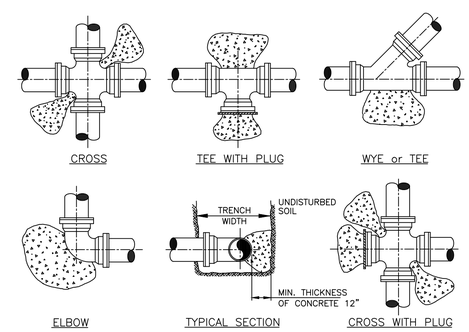

PIPE	THRUST BLOCK AREA REQ'D	REMARKS	NOTE: FOR OTHER FITTINGS USE THE FOLLOWING FACTORS.
4"	2.0 SQ. FT.	VALUES ARE FOR 90° BEND, BASED ON 2000 P.S.F. SAFE BEARING LOAD AND PIPE PRESSURE OF 150 P.S.I. FOR OTHER SOILS & PRESSURES THE AREA REQUIRED IS IN DIRECT PROPORTION	TEE 100% 45° BEND 71% 22 1/2° BEND 39% 11 1/4° BEND 20% DEAD END 100%
6"	4.0 SQ. FT.		
8"	6.6 SQ. FT.		
10"	10.0 SQ. FT.		
12"	14.0 SQ. FT.		
14"	18.6 SQ. FT.		

NOTES:

1. CONCRETE THRUST BLOCKS OR THRUST COLLARS MAY BE UTILIZED ONLY IF NECESSARY FOR CONNECTIONS TO AN EXISTING PIPING SYSTEM, OTHERWISE MECHANICAL RESTRAINTS SHALL BE USED. KEEP "T" BOLTS CLEAR OF CONCRETE, WRAPPED IN VISQUEEN FOR FUTURE ACCESS, WITH A MINIMUM OF 1' THICKNESS BETWEEN THE FITTING AND SOIL.
2. BEFORE POURING CONCRETE, PLUGS SHALL BE WRAPPED WITH VISQUEEN AND A BOARD PLACED IN FRONT.
3. CONCRETE SHALL BE 3000 P.S.I. MINIMUM.

408 TRUST BLOCK DETAIL

Scale: N.T.S.

Hazen

HAZEN AND SAWYER
4000 HOLLYWOOD BLVD, SUITE 750N
HOLLYWOOD, FLORIDA 33021

Certificate of Authorization No: 2771

THOMPSON & ASSOCIATES
CERTIFICATE OF AUTHORIZATION 28185
PO BOX 22398, FORT LAUDERDALE, FLORIDA 33335
MIAMI-DADE (786) 897.5919
BROWARD (954) 761.1073
PALM BEACH (561) 932.1668

ENGINEER: NOEL RODRIGUEZ, P.E.
REG. No: 48430
DATE: 5/21/2019
TEL: 954-761-1073
FAX: 954-987-2949

DRAWN BY: NR	DATE: 11/27/2018
DESIGNED BY: NR	SCALE: N/A
CHECKED BY: JFT	
FIELD BOOK: XXXX	

CITY OF FORT LAUDERDALE
PUBLIC WORKS DEPARTMENT
ENGINEERING & ARCHITECTURE
100 North Andrews Avenue, Fort Lauderdale, Florida 33301

REVISIONS

NO.	DATE	BY	CHK'D	DESCRIPTION
2	05/02/19	NR	FT	BC EPGMD

BID SET, NOT FOR CONSTRUCTION

PROJECT # 12390
SEWER DESIGN AND IMPLEMENTATION PROGRAM
PUMP STATION D-38
FORCE MAIN DETAILS

SHEET NO. C-7 OF 11

TOTAL: 25

CAD FILE: 43194-C07-DETL

DRAWING FILE NO. 4-XXXX-XXXX

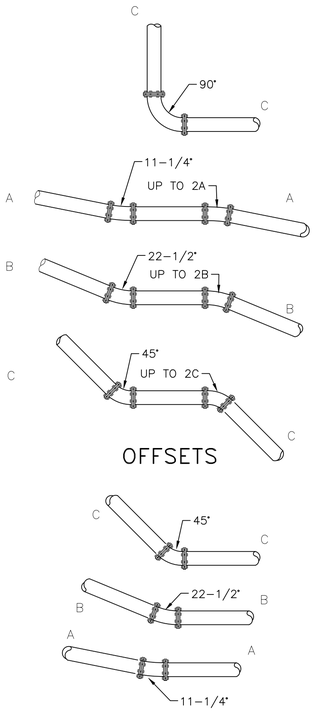

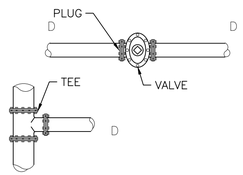

SIZE	DISTANCE IN FEET A & B	C	D
4"	18	18	54
6"	18	18	72
8"	18	36	90
10"	18	36	108
12"	18	36	126
14"	18	54	144
16"	18	54	162
18"	18	54	180
20"	18	72	198
24"	18	72	216

NOTE:
1. FOR PIPE SIZE OVER 24" SEE SPECIFICATIONS

409 MINIMUM RESTRAINED JOINT LENGTH FOR PRESSURE MAINS
Scale: N.T.S.

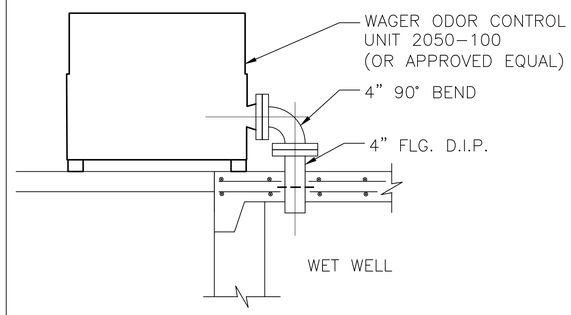

411 VENT PIPE DETAIL
Scale: N.T.S.

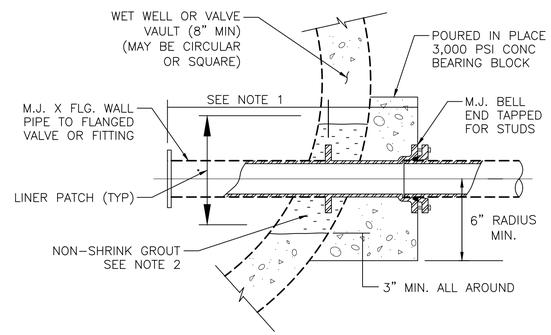

412 RESTRAIN WALL PIPE DETAIL
Scale: N.T.S.

DEPARTMENT OF SUSTAINABLE DEVELOPMENT – UD&P

TREE PROTECTION DETAIL

Rev: 1 | Revision Date: 4/10/2018 | I.D. Number: TPD

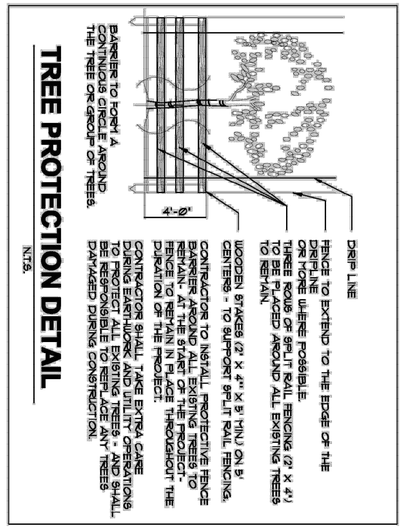

Approved by: Ella Parker, Urban Design and Planning Manager
Uncontrolled in hard copy unless otherwise marked

WE BUILD COMMUNITY

Hazen

HAZEN AND SAWYER
4000 HOLLYWOOD BLVD, SUITE 750N
HOLLYWOOD, FLORIDA 33021
Certificate of Authorization No: 2771

THOMPSON & ASSOCIATES
CERTIFICATE OF AUTHORIZATION 28185
PO BOX 22398, FORT LAUDERDALE, FLORIDA 33335
MIAMI-DADE (786) 897.5919
BROWARD (954) 761.1073
PALM BEACH (561) 932.1668

ENGINEER: NOEL RODRIGUEZ, P.E.
REG. No: 48830
DATE: 5/21/2019
TEL: 954-761-1073
FAX: 954-987-2949

DRAWN BY: NR | DATE: 11/27/2018
DESIGNED BY: NR | SCALE: N/A
CHECKED BY: JFT
FIELD BOOK: XXXX

CITY OF FORT LAUDERDALE
PUBLIC WORKS DEPARTMENT
ENGINEERING & ARCHITECTURE
100 North Andrews Avenue, Fort Lauderdale, Florida 33301

REVISIONS

NO.	DATE	BY	CHK'D	DESCRIPTION
2	05/02/19	NR	JFT	BC EPGMD

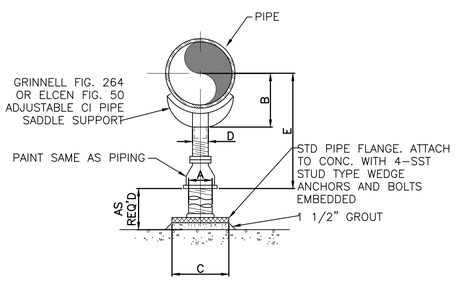

NOTES:
1. PROVIDE HALF ROUND RIGID INSULATION AND INSULATION PROTECTION SHIELD, SIMILAR TO GRINNELL FIGURE 167 OR ELCEN FIGURE 219, WHERE PIPING IS INSULATED.
2. PROVIDE NEOPRENE WAFFLE ISOLATION PAD, SIMILAR TO MASON TYPE 'W' OR KORFUND KORPAD 40, UNDER SUPPORT FOOT WHEN PIPING IS ISOLATED OR SUPPORT IS ADJACENT TO MECHANICAL EQUIPMENT.
3. FOR BASE, HEIGHT AND FLANGE DIMENSIONS, SEE TABLE.

PIPE SIZE	DIMENSION TABLE A	B	C	D	E MIN.	E MAX.
4"	3"	4-1/4"	9"	2-1/2"	9-1/4"	14"
6"	3"	5-1/2"	9"	2-1/2"	10-1/2"	15-1/4"
8"	3"	6-7/8"	9"	2-1/2"	11-3/4"	16-1/2"
10"	3"	8-1/2"	9"	2-1/2"	13-1/2"	18-1/4"
12"	3"	9-15/16"	9"	2-1/2"	15"	19-3/4"

410 PIPE SUPPORT DETAIL
Scale: N.T.S.

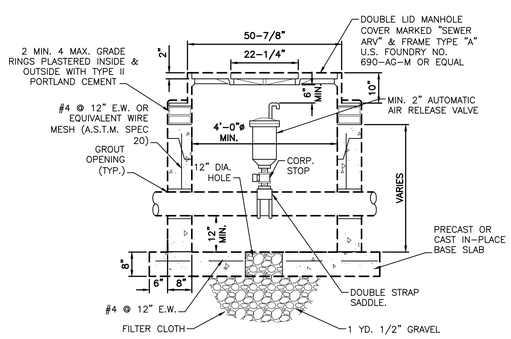

NOTES:
1. PRECAST CONCRETE TYPE # 4000 P.S.I.
2. ALL OPENINGS SHALL BE SEALED WITH A WATERPROOF NON-SHRINKING GROUT.
3. LIFT HOLES ARE PERMITTED.
4. ALL PIPE HOLES SHALL BE PRECAST OR CORE-DRILLED.
5. MANHOLE FABRICATION SHALL BE IN ACCORDANCE WITH A.S.T.M. C-478 LATEST STANDARD.
6. PAINT INSIDE & OUTSIDE WITH 2 COATS OF AN APPROVED PROTECTIVE COATING. (MIN. 10 MIL D.F.T. PER COAT.)
7. CONCRETE COLLAR REQUIRED WHEN MANHOLE IS OUTSIDE PAVEMENT, SEE DETAIL.
8. AIR RELEASE VALVE SHALL BE TYPE AND SIZE APPROPRIATE FOR SERVICE INTENDED (2"MIN.).
9. CONSTRUCTION JOINT AT BASE IS PERMITTED.
10. DUCTILE IRON PIPE IS REQUIRED THROUGH THE MANHOLE.
11. THREADED AREAS OF CORPORATION STOP SHALL BE SPIRAL WRAPPED WITH TWO LAYERS OF TEFLON TAPE.
12. IF MANHOLE IS LARGER THAN 4' DIAMENTER USE REDUCING GRADE RING OR CONE SECTION.
13. USE CONFLICT TYPE MANHOLE WITH PRECAST OR CAST IN-PLACE BOTTOM SLAB.

413 AIR RELEASE VALVE AND MANHOLE IN PAVED AREAS
Scale: N.T.S.

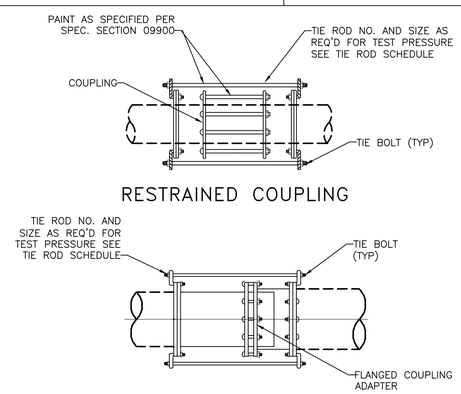

TIE ROD SCHEDULE															
TEST PRESSURE		25 PSI		50 PSI		100 PSI		150 PSI		225 PSI		375 PSI	
PIPE DIAMETER (IN.)	MINIMUM PIPE WALL THICKNESS (IN.) *	TIE RODS DIA (IN.)	NO. REQD	TIE RODS DIA (IN.)	NO. REQD	TIE RODS DIA (IN.)	NO. REQD	TIE RODS DIA (IN.)	NO. REQD	TIE RODS DIA (IN.)	NO. REQD	TIE RODS DIA (IN.)	NO. REQD
6	3/16	—	—	—	—	5/8	2	5/8	2	5/8	2	5/8	2
8	3/16	—	—	—	—	5/8	2	5/8	2	5/8	2	3/4	2
10	3/16	—	—	—	—	5/8	2	5/8	2	3/4	2	7/8	2
12	3/16	5/8	2	5/8	2	5/8	2	5/8	2	3/4	2	7/8	4

414 RESTRAINED COUPLING DETAIL
Scale: N.T.S.

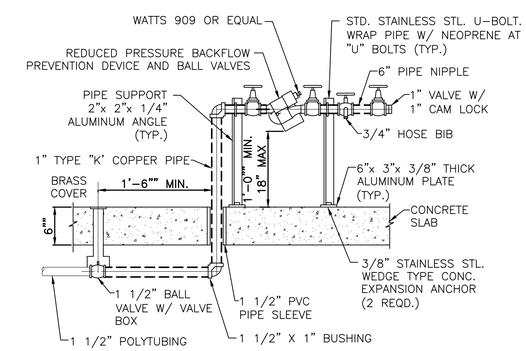

2 415 REDUCED PRESSURE BACKFLOW PREVENTER WITH HOSE CONNECTION FOR LIFT STATION
Scale: N.T.S.

BID SET, NOT FOR CONSTRUCTION

PROJECT # 12390
SEWER DESIGN AND
IMPLEMENTATION PROGRAM
PUMP STATION D-38
FORCE MAIN DETAILS

SHEET NO. C-8 OF 12
TOTAL: 25
CAD FILE: 43194-C08-DETL
DRAWING FILE NO. 4-XXX-XX

ACCESS HATCH:

1. EACH HATCH SHALL BE DESIGNED ACCORDING TO THE OPENINGS SHOWN ON THE DRAWINGS. THE ALUMINUM ACCESS FRAMES SHALL BE MANUFACTURED FROM 1/4–INCH THICK, EXTRUDED 6063–T5 ALUMINUM.
2. THE FRAME SHALL BE DRAINABLE WITH A 1 1/2–INCH THREADED DRAIN COUPLING LOCATED ON CORNER FRAME.
3. THE DOOR PANELS SHALL CLOSE FLUSH AND SHALL BE 1/4–INCH THICK 5086–H34 ALUMINUM DIAMOND (CHECKER) PLATE REINFORCED FOR AASHTO H–20–44 WHEEL LOADS.
4. REMOVABLE ALUMINUM CROSS–BEAMS SHALL BE PROVIDED BY THE HATCH SUPPLIER AS REQUIRED TO ACCOMPLISH THE STATED LOADING.
5. THE DOORS SHALL HAVE HEAVY DUTY STAINLESS STEEL BUTT HINGES WITH TAMPER–PROOF FASTENERS.
6. ALL HARDWARE SHALL BE MADE OF TYPE 316 STAINLESS STEEL.
7. EACH DOOR SHALL HAVE SPRING OPERATORS, SUCH THAT THE MAXIMUM LIFTING EFFORT IS LESS THAN 25 POUNDS.
8. THE HATCH SUPPLIER SHALL PROVIDE THE NUMBER OF SPRING OPERATORS AS REQUIRED TO ACCOMPLISH THE MAXIMUM LIFTING REQUIREMENT.
9. EACH DOOR SHALL OPEN TO 90 DEGREE AND LOCK AUTOMATICALLY WITH A STAINLESS STEEL, POSITIVE LOCKING ARM AND A STAINLESS STEEL RELEASE HANDLE.
10. EACH DOOR SHALL HAVE A RECESSED STAINLESS STEEL LIFTING HANDLE AND RECESSED OVERSIZED PADLOCK BOX.
11. THE HATCH SHALL BE PROVIDED WITH A TYPE 316 STAINLESS STEEL SLAM–LOCK WITH A REMOVABLE HANDLE.
12. ALL ACCESS DOORS SHALL BE DESIGNED WITH A NEOPRENE GASKET ON THE INSIDE LIP OF THE FRAME PERIMETER, TO FORM AN ESSENTIALLY AIR–TIGHT SEAL.
13. ALL ACCESS DOORS SHALL BE EQUIPPED WITH A MINIMUM OF FOUR (4) STAINLESS STEEL CARRIAGE BOLTS WITH WELDED NUTS TO SECURE THE DOORS IN THE DOWN POSITION. BOLTS SHALL BE PER THE MANUFACTURERS RECOMMENDATION.

WETWELL REHABILITATION:

1. SURFACE PREPARATION

   A. ANY LOOSE, UNSOUND, OR CRACKED BRICK OR CONCRETE SHALL BE CHISELED OR HAMMERED OUT.

   B. ALL SURFACES TO RECEIVE EITHER THE ONE COMPONENT REINFORCED MORTAR OR EPOXY LINING SHALL BE STRUCTURALLY SOUND AND SHALL BE CLEANED TO REMOVE LAITANCE, GREASE. LOOSE MORTAR, PAINT OR OTHER SURFACE CONTAMINANTS USING SAND BLASTING, HYDRO–GRIT BLASTING AT 3,500 PSI MINIMUM OR OTHER MECHANICAL SCARIFICATION TECHNIQUES APPROVED BY THE ENGINEER.

   C. SURFACE SHALL BE TESTED BY THE CONTRACTOR, IN THE PRESENCE OF THE ENGINEER,USING A SURFACE pH TESTER EQUAL TO INSTA–CHECK SURFACE pH PENCIL AS MANUFACTURED BY PHYDRION. SURFACE SHALL INDICATE A pH=7.0 OR GREATER.

   D. ALL ACTIVE LEAKS IN THE STRUCTURE SHALL BE STOPPED USING CHEMICAL GROUTING AND HYDRAULIC CEMENT.

   E. ALL CRACKS, VOIDS AND REMOVED STEP HOLES SHALL BE FILLED USING A WATER RESISTANT FAST–SETTING CEMENT PATCH.

2. REBUILDING CONCRETE SURFACES

   A. THE CONCRETE SHALL BE RETURNED TO ITS ORIGINAL WALL THICKNESS USING A ONE COMPONENT MORTAR, MINIMUM INSTALLED THICKNESS SHALL BE 1/2".

   B. ONE COMPONENT REINFORCED WET MORTAR: THE ONE COMPONENT MORTAR SHALL BE MICROSILICA ENHANCED, FIBER REINFORCED AND BE DESIGNED FOR CORROSIVE ENVIRONMENTS WITH A pH=2.0 OR HIGHER. REINFORCED MORTAR SHALL HAVE THE FOLLOWING MINIMUM PHYSICAL PROPERTIES:

FLEXURAL STRENGTH	1000 PSI @ 28 DAYS ASTM C78–84
COMPRESSIVE STRENGTH	9000 PSI @ 28 DAYS ASTM C109–92
DENSITY(WET):	130 LB/CU. FT. ASTM C138–92
SPLITTING TENSILE STRENGTH:	700 PSI @ 28 DAYS ASTM C496–90
SLANT SHEAR BOND STRENGTH:	2250PSI @ 28 DAYS ASTM C882–91
SULFATE RESISTANCE WEIGHTLOSS 84 DAY IMMERSION	pH 1.0 <.97% ASTM C–267 pH 2.0 <.30% pH 3.0 <.18%

   C. MATERIAL SHALL BE BASF SP15, OR APPROVED EQUAL.

PAINTING & COATINGS:

1. WETWELL & VALVE VAULT EXTERIOR: THE EXTERIOR OF WET WELL & VALVE VAULTS SHALL BE COATED WITH TWO (2), 10 MILS (DFT) EACH COAT OF A BITUMASTIC COATING (20 MILS TOTAL DFT). BITUMASTIC COATING SHALL BE CARBOLINE (KOPPERS) 300M, OR APPROVED EQUAL.
2. WETWELL INTERIOR, OPTION A: THE INTERIOR OF A NEW OR REHABILITATED WET WELL, WHERE DIRECTED BY THE CITY, SHALL BE COATED WITH TWO (2) COATS, 15 MILS (DFT) EACH, OF A BITUMASTIC COATING (30 MILS DFT, TOTAL). BITUMASTIC COATING SHALL BE CARBOLINE (KOPPERS) 300M, OR APPROVED EQUAL.
3. WETWELL INTERIOR, OPTION B: THE INTERIOR OF A NEW OR REHABILITATED WET WELL, WHERE DIRECTED BY THE CITY, SHALL BE COATED WITH A SPRAYABLE, HIGH BUILD, MOISTURE TOLERANT, CHEMICAL RESISTANT EPOXY COATING DESIGNED TO BE APPLIED ON DRY OR DAMP CONCRETE SURFACES AND YIELDING A HARD DURABLE CHEMICAL RESISTANT FINISH TO A pH OF 1.0, EPOXY COATING SHALL BE BASF SEWER GUARD HBS 100, OR OTHER APPROVED EQUAL. APPLY MATERIAL USING A 30:O OR 45:1 AIRLESS SPRAYER TO A MINIMUM DRY THICKNESS OF 60 MILS IN TWO 30 MILS COATS.
4. VALVE VAULT CONCRETE INTERIOR SURFACES: THE INTERIOR CONCRETE SURFACES OF VALVE VAULTS SHALL BE COATED WITH A 100% SOLIDS POLYAMINE EPOXY SPECIFICALLY DESIGNED FOR WASTEWATER IMMERSION AND LOW PERMEATION TO H2S GAS. MATERIAL SHALL BE IN CONFORM WITH THE PRODUCT SPECIFICATION SHEETS, OR APPROVED EQUAL, APPLIED IN TWO (2) COATS, 15.0 MILS (DFT) EACH, (30.0 MILS DFT, TOTAL). FINAL COLOR TO BE BEIGE. SURFACE PREPARATION, PRIMING AND APPLICATION SHALL BE IN ACCORDANCE WITH THE MORE STRINGENT OF THE MANUFACTURERS RECOMMENDATIONS OR LISTED IN THE PRODUCT SPECIFICATION SHEETS.
5. DUCTILE IRON PIPE AND FITTINGS: DIP EXTERIOR SURFACES SHALL BE COATED WITH A 100% POLYAMINE EPOXY SPECIFICALLY DESIGN FOR WASTEWATER IMMERSION AND LOW PERMEATION TO H2S GAS. MATERIAL SHALL BE IN CONFORM WITH THE PRODUCT SPECIFICATION SHEETS, OR APPROVED EQUAL, APPLIED IN TWO (2) COATS 20 MILS (DFT) EACH (40.0 MIL DFT, TOTAL). DIP INTERIOR SURFACES SHALL BE COATED WITH 40 MILS (DFT) OF PROTECTO 401.
6. VALVES SHALL RECEIVE ONLY THE FINAL 20 MIL (DFT) COAT. FINAL COLOR TO BE BEIGE. SURFACE PREPARATION, PRIMING AND APPLICATION SHALL BE IN ACCORDANCE WITH THE MORE STRINGENT OF THE MANUFACTURER'S RECOMMENDATIONS OR THE CITY'S SPECIFICATIONS. SURFACE PREPARATION AND APPLICATION SHALL BE IN ACCORDANCE WITH THE MANUFACTURER'S RECOMMENDATION. CERTIFICATION OF MANUFACTURER SHALL BE PROVIDED.

Hazen

HAZEN AND SAWYER
4000 HOLLYWOOD BLVD, SUITE 750N
HOLLYWOOD, FLORIDA 33021

Certificate of Authorization No: 2771

THOMPSON & ASSOCIATES
CERTIFICATE OF AUTHORIZATION 28185
PO BOX 22398, FORT LAUDERDALE, FLORIDA 33335
MIAMI-DADE (786) 897.5919
BROWARD (954) 761.1073
PALM BEACH (561) 932.1668

ENGINEER: NOEL RODRIGUEZ, P.E.
REG. No: 48830
DATE: 5/21/2019

TEL: 954–761–1073
FAX: 954–987–2949

DRAWN BY: NR | DATE: 11/27/2018
DESIGNED BY: NR | SCALE: N/A
CHECKED BY: JFT
FIELD BOOK: XXXX

CITY OF FORT LAUDERDALE
PUBLIC WORKS DEPARTMENT
ENGINEERING & ARCHITECTURE
100 North Andrews Avenue, Fort Lauderdale, Florida 33301

REVISIONS

NO.	DATE	BY	CHK'D	DESCRIPTION

BID SET, NOT FOR CONSTRUCTION

PROJECT # 12390
SEWER DESIGN AND
IMPLEMENTATION PROGRAM
PUMP STATION D-38
LIFT STATION NOTES

SHEET NO. C-9 OF 13
TOTAL: 25
CAD FILE: 43194–C09–NOTE
DRAWING FILE NO. 4–XXX–XXXX

ELECTRICAL LEGEND

SYMBOL	DESCRIPTION
	CONTROL DEVICE – FURNISHED AND INSTALLED UNDER OTHER SECTIONS; RACEWAYS, CONDUCTORS, AND CONDUCTOR END TERMINATORS FURNISHED AND INSTALLED UNDER THIS SECTION AS SHOWN. CONDUCTOR FINAL CONNECTIONS PROVIDED UNDER OTHER SECTIONS.
	CONNECTION POINT TO EQUIPMENT SPECIFIED. FURNISHED AND INSTALLED UNDER OTHER SECTIONS. RACEWAY, CONDUCTOR AND CONNECTION IN THIS SECTION.
[5–6] or [5–E(3)]	INDICATES RACEWAYS AND CIRCUIT NUMBERS. FIRST NUMBER IS RACEWAY AND NUMBER AFTER DASH IS CIRCUIT NUMBER. 5–E(3) INDICATES THAT THERE ARE 3 EMPTY RACEWAY NO.5. SEE SCHEDULE.
MCC–A	MAJOR ELECTRICAL COMPONENT OR DEVICE – NAME OR IDENTIFYING SYMBOL AS SHOWN.
	BRANCH CIRCUIT PANEL BOARD
UH1	UNIT HEATER NO.1 SEE SCHEDULE
TTC	TELEPHONE TERMINAL CABINET
	TERMINAL JUNCTION BOX
10	WOUND–ROTOR MOTOR, HORSEPOWER INDICATED
5	MOTOR, SQUIRREL CAGE INDUCTION – HORSEPOWER INDICATED
1	LUMINAIRE – SEE SCHEDULE
2	LUMINAIRE – SEE SCHEDULE
3	LUMINAIRE AND POLE – SEE SCHEDULE
4	WALL MOUNTED LUMINAIRE – SEE SCHEDULE
5	FLOOD LIGHTS – AIM IN THE DIRECTION SHOWN
	EXIT LIGHTS – SEE SCHEDULE
Sa or 2a	SMALL LETTER SUBSCRIPT AT SWITCH AND LUMINAIRE INDICATES SWITCHING. SUBSCRIPT NUMBER AT LUMINAIRE INDICATES CIRCUIT IN PANELBOARD.
LA–2	HOME RUN – DESTINATION SHOWN
or G	EXPOSED CONDUIT AND CONDUCTORS*
or G	CONCEALED CONDUIT AND CONDUCTORS*
	NOTE: * ALL UNMARKED CONDUIT RUNS CONSIST OF TWO NO.12 CONDUCTORS IN CONDUIT. RUNS MARKED WITH CROSSHATCHES INDICATE NUMBER OF NO.12 CONDUCTORS. CROSSHATCH WITH SUBSCRIPT "G" INDICATES GREEN GROUND WIRE. SIZE CONDUIT ACCORDING TO SPECIFICATIONS AND APPLICABLE CODE.
	CROSSHATCHES WITH BAR INDICATE #10 CONDUCTOR. SIZE CONDUIT ACCORDING TO SPECIFICATIONS AND APPLICABLE CODE.
	CONDUIT DOWN
	CONDUIT UP
	CONDUIT, STUBBED AND CAPPED AS SHOWN
C	CABLE TRAY – SEE SPECIFICATIONS
B	BUS DUCT – SEE SPECIFICATIONS
P	TRENCHING FOR UTILITY COMPANY PRIMARY POWER CUTS
T	TRENCHING FOR TELEPHONE COMPANY CIRCUITS
CE	CONCRETE ENCASED CONDUIT
DB	DIRECT BURIED CONDUIT
S	WALL SWITCH: 2– DOUBLE POLE, 3– THREE WAY, 4– FOUR WAY, WP–WEATHERPROOF, P– PILOT LIGHT, K– KEY OPERATED, D– DIMMER, CRE–CORROSION RESISTANT
S_M	MANUAL MOTOR STARTER SWITCH

SYMBOL	DESCRIPTION
	CONVENIENCE RECEPTACLE – DUPLEX UNLESS SPECIFIED OTHERWISE WP–WEATHERPROOF C– CLOCK HANGER TL–TWIST LOCK CRE–CORROSION RESISTANT
	CONVENIENCE RECEPTACLE, PEDESTAL, DUPLEX SINGLE FACE UNLESS INDICATED OTHERWISE
30	RECEPTACLE – 240V., 1|, AMPERAGE INDICATED
30	RECEPTACLE, SPECIAL PURPOSE – AMPERAGE AS INDICATED
	DUPLEX CONVENIENCE RECEPTACLE – FLUSH IN FLOOR
	MULTI OUTLET ASSEMBLY
	WALL CLOCK WITH CLOCK HANGER CONVENIENCE RECEPTACLE
	TELEPHONE RECEPTACLE (OUTLET BOX ONLY) FLUSH IN FLOOR
	TELEPHONE RECEPTACLE (OUTLET BOX ONLY)
J or HI	GENERAL CONTROL OR WIRING DEVICE. NEMA 1 ENCLOSURE UNLESS INDICATED OTHERWISE. LETTER SYMBOLS OR ABBREVIATIONS INDICATE TYPE OF DEVICE.
PB	PUSH–BUTTON STATION, NEMA 1 ENCLOSURE UNLESS INDICATED OTHERWISE. (WP = NEMA 4 ENCLOSURE) SEE CONTROL DIAGRAMS FOR TYPE PUSH BUTTON REQUIRED.
30	NONFUSED DISCONNECT SWITCH, SIZE INDICATED, 3 POLE UNLESS INDICATED OTHERWISE, NEMA 1 ENCLOSURE, WP = WEATHERPROOF NEMA 3R)
F 60/40	FUSED DISCONNECT SWITCH, SIZE INDICATED (60/40, 60 = SWITCH RATING: 40 = FUSE RATING) 3 POLE UNLESS INDICATED OTHERWISE, NEMA 1 ENCLOSURE, WP = WEATHERPROOF (NEMA 3R)
2	CONTACTOR, MAGNETIC, NEMA SIZE INDICATED, NEMA 1 ENCLOSURE, UNLESS INDICATED OTHERWISE.
30 L	LIGHTING CONTACTOR, CURRENT RATING INDICATED, NEMA 1 ENCLOSURE UNLESS INDICATED OTHERWISE. SEE CONTROL DIAGRAM FOR NUMBER OF POLES.
2	STARTER MAGNETIC NEMA SIZE INDICATED, NEMA 1 ENCLOSURE UNLESS INDICATED OTHERWISE. SEE CONTROL DIAGRAM.
2	COMBINATION (FUSE OR CIRCUIT BREAKER ASINDICATED) MAGNETIC STARTER, NEMA SIZE INDICATED, NEMA 1 ENCLOSURE UNLESS INDICATED OTHERWISE. SEE CONTROL DIAGRAM.
	METERING FACILITIES
	MULTI–PARTY DESK TOP COMMUNICATIONS SYSTEM STATION WITH REMOTE AMPLIFIER
W	MULTI–PARTY WALL MOUNTED COMMUNICATIONS SYSTEM STATION WITH INTEGRAL AMPLIFIER
	CONE TYPE PAGING SPEAKER, CEILING MOUNTED
	INTERIOR PAGING TRUMPET SOUND REPRODUCER, 120" x 60" WITH REMOTE AMPLIFIER, SURFACE MOUNTED.
	OUTDOOR PAGING TRUMPET SOUND REPRODUCER, 120" x 60" WITH REMOTE AMPLIFIER, SURFACE MOUNTED.
	TERMINAL CABINET FOR COMMUNICATIONS SYSTEM
F	FIRE ALARM STATION, MANUAL
FA	FIRE ALARM STATION, AUTOMATIC, HEAT DETECTOR
F	FIRE ALARM BELL
F	FIRE ALARM HORN
FI	FIRE ALARM IONIZATION DETECTOR
I	AIR DUCT IONIZATION DETECTOR
EF	EXHAUST FAN
AE	COMBUSTIBLE GAS DETECTOR

SYMBOL	DESCRIPTION
1	CONTACT – NORMALLY OPEN WITH NEMA SIZE INDICATED AS APPLICABLE
1	CONTACT – NORMALLY CLOSED WITH NEMA SIZE INDICATED AS APPLICABLE
	OVERLOAD RELAY HEATER
1	MAGNETIC STARTER WITH NEMA SIZE INDICATED
100/M	CIRCUIT BREAKER, MAGNETIC TRIP ONLY, FRAME SIZE SHOWN, 3 POLE UNLESS INDICATED OTHERWISE.
400	CIRCUIT BREAKER, THERMAL MAGNETIC TRIP SHOWN, 3 POLE UNLESS INDICATED OTHERWISE.
400 400	CIRCUIT BREAKER WITH CURRENT LIMITING FUSES, TRIP AND FUSE RATING INDICATED, 3 POLE UNLESS INDICATED OTHERWISE.
400 225	FUSED SWITCH, SWITCH AND FUSE CURRENT RATING INDICATED, 3 POLE UNLESS INDICATED OTHERWISE.
100	SWITCH – CURRENT RATING INDICATED, 3 POLE UNLESS INDICATED OTHERWISE.
	DRAWOUT AIR CIRCUIT BREAKER, LOW VOLTAGE
	DRAWOUT AIR CIRCUIT BREAKER, MEDIUM VOLTAGE
	DRAWOUT FUSED SWITCH, MEDIUM VOLTAGE
	LIGHTNING ARRESTER
	FUSE
10	CAPACITOR – KVAR INDICATED
SW V 0–600V	METER WITH SWITCH – SCALE RANGE SHOWN
	GROUND
120V or	TRANSFORMER, SECONDARY VOLTAGES, PHASE AND RATING INDICATED AS APPLICABLE 120/240V 15 KVA 1 PH
GFR 25A 0.1	PICK–UP SETTING / TIME CURRENT CHARACTERISTIC } GROUND FAULT RELAY WITH C.T.
	PUSH–BUTTON SWITCH, MOMENTARY CONTACT, NORMALLY OPEN
	PUSH–BUTTON SWITCH, MOMENTARY CONTACT, NORMALLY CLOSED
	PUSH BUTTON SWITCH, MAINTAINED CONTACTS WITH MECHANICAL INTERLOCK
	3 POSITION SELECTOR SWITCH MAINTAINED CONTACT
TDR TC or TDR TO	TIME DELAY RELAY CONTACT (TIME ACTION INDICATED)
	REMOTE DEVICE
0 H A 1 2	SELECTOR SWITCH – MAINTAINED CONTACT – CHART IDENTIFIES OPERATION:

CKT.	POSITION HAND	OFF	AUTO
1	X	O	O
2	O	O	X

X – CLOSED CONTACT
O – OPEN CONTACT

SYMBOL	DESCRIPTION
(3)	CURRENT TRANSFORMER, NUMBER INDICATED
A	INDICATING LIGHT, PUSH–TO–TEST, LETTER INDICATES COLOR
A	INDICATING LIGHT – LETTER INDICATES COLOR A – AMBER G – GREEN B – BLUE R – RED C – CLEAR W – WHITE

SYMBOL	DESCRIPTION
	TIME DELAY CONTACTS
	NORMALLY OPEN, TIMED OPEN
	NORMALLY OPEN, TIMED CLOSED
	NORMALLY CLOSED, TIMED OPEN
	NORMALLY CLOSED, TIMED CLOSED
	LIQUID LEVEL
	OPENS ON RISING LEVEL, CLOSES ON FALLING LEVEL
	CLOSES ON RISING LEVEL, OPENS ON FALLING LEVEL
	PRESSURE OR VACCUUM
	OPENS ON RISING PRESSURE, CLOSES ON FALLING PRESSURE
	CLOSES ON RISING PRESSURE, OPENS ON FALLING PRESSURE
	FLOW
	OPENS ON HIGH FLOW, CLOSES ON LOW FLOW
	CLOSES ON HIGH FLOW, OPENS ON LOW FLOW
	TEMPERATURE
	OPENS ON RISING TEMPERATURE, CLOSES ON FALLING TEMPERATURE
	CLOSES ON RISING TEMPERATURE, OPENS ON FALLING TEMPERATURE
	LIMIT SWITCH
	HELD OPEN, NORMALLY CLOSED
	HELD CLOSED, NORMALLY OPEN
A E–2	ONE LINE DIAGRAM CONTINUATION SYMBOL A=INTERFACE IDENTIFIER E–2=DWG NUMBER WHERE OTHER END OF CONTINUATION CAN BE FOUND
XX	PROTECTIVE RELAY XX = 47 PHASE FAILURE/PHASE REVERSE 50 INSTANTANEOUS 51 TIME OVERCURRENT 51GS GROUND FAULT/GROUND SENSOR 51N RESIDUAL CONNECTED GROUND RELAY 86 LOCKOUT RELAY 87 DIFFERENTIAL RELAY

NOTE:
THIS IS A STANDARD LEGEND SHEET. SOME SYMBOLS OR ABBREVIATIONS MAY APPEAR ON THIS SHEET AND NOT ON THE PLANS.

BID SET, NOT FOR CONSTRUCTION

THOMPSON & ASSOCIATES
CERTIFICATE OF AUTHORIZATION 28185
PO BOX 22398, FORT LAUDERDALE, FLORIDA 33335
MIAMI-DADE (786) 897.5919
BROWARD (954) 761.1073
PALM BEACH (561) 932.1668

Hazen
HAZEN AND SAWYER
4000 HOLLYWOOD BLVD, SUITE 750N
HOLLYWOOD, FLORIDA 33021
Certificate of Authorization No: 2771

ENGINEER: NOEL RODRIGUEZ, P.E.
REG. NO. 48400
DATE: 5/21/2019
TEL: 954-761-1073
FAX: 954-987-2949

DRAWN BY: SPH | DATE: 11/27/2018
DESIGNED BY: SPH | SCALE: N/A
CHECKED BY: LMS | FIELD BOOK: XXXX

CITY OF FORT LAUDERDALE
PUBLIC WORKS DEPARTMENT
ENGINEERING & ARCHITECTURE
100 North Andrews Avenue, Fort Lauderdale, Florida 33301

REVISIONS

NO.	DATE	BY	CHK'D	DESCRIPTION

PROJECT # 12390
SEWER DESIGN AND IMPLEMENTATION PROGRAM
PUMP STATION D-38
ELECTRICAL LEGEND

SHEET NO. E-1 OF 14
TOTAL: 25
CAD FILE: 43194–E01–ABBR
DRAWING FILE NO. 4–XXX–XX

EXHIBIT 3
CAM 19-0496
Page 405 of 483
p. 405

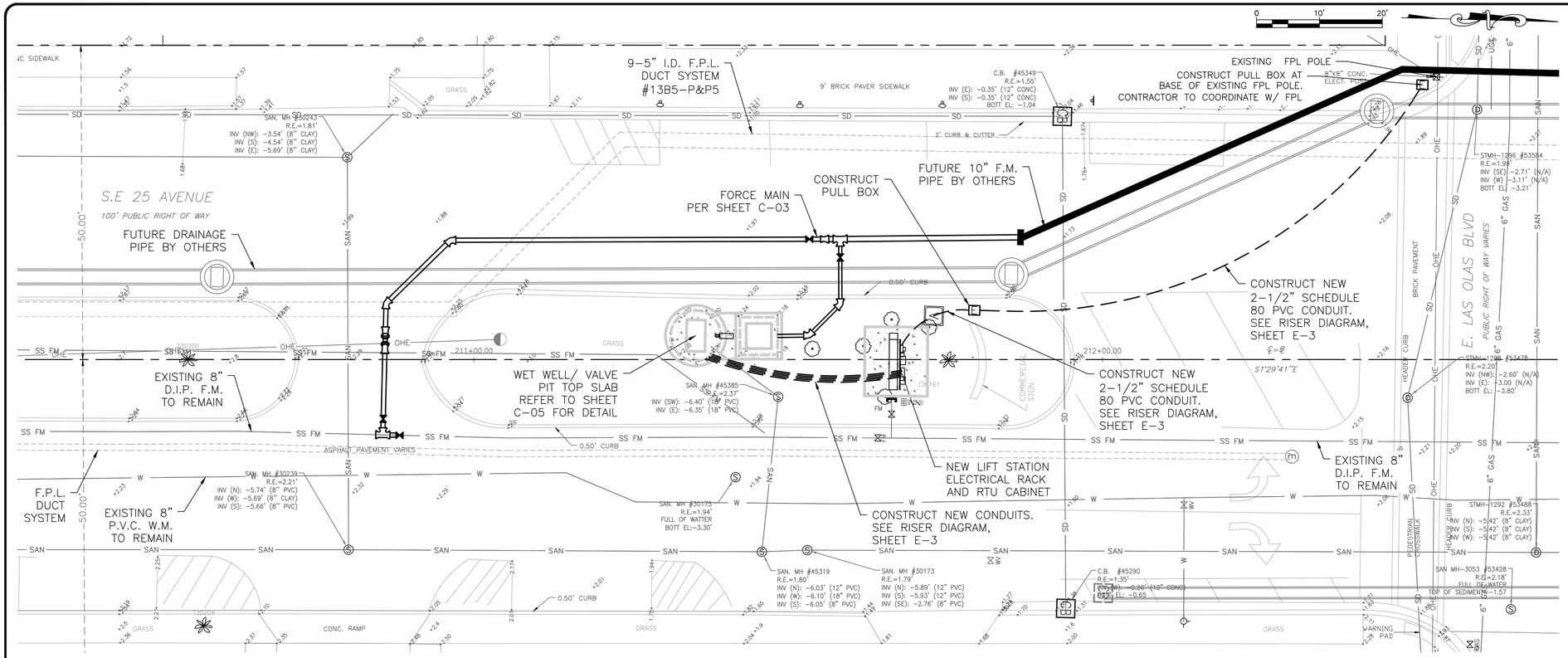

ELECTRICAL SITE PLAN

SCALE: 1"=10'

Hazen

HAZEN AND SAWYER
4000 HOLLYWOOD BLVD, SUITE 750N
HOLLYWOOD, FLORIDA 33021

Certificate of Authorization No: 2771

THOMPSON & ASSOCIATES
CERTIFICATE OF AUTHORIZATION 28185
PO BOX 22398, FORT LAUDERDALE, FLORIDA 33335
MIAMI-DADE (786) 897.5919
BROWARD (954) 761.1073
PALM BEACH (561) 932.1668

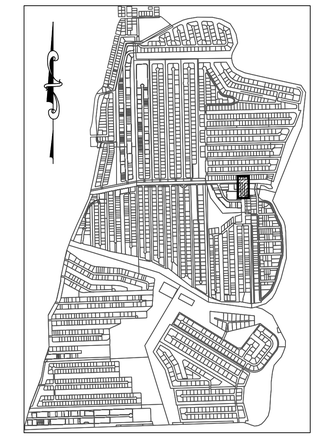

NOTES:

1. CONTRACTOR SHALL REPLACE SURROUNDING GROUND AFFECTED INCLUDING BUT NOT LIMITED TO PAVERS, SIDEWALK, SOD, LANDSCAPE AND BRING IT TO EXISTING OR BETTER CONDITIONS.
2. EXISTING UTILITY DEPTHS ARE UNKNOWN UNLESS OTHERWISE INDICATED. LOCATIONS AND DEPTHS ARE ESTIMATES.

ELEVATIONS SHOWN HEREON ARE BASED ON THE NORTH AMERICAN VERTICAL DATUM 1988 (NAVD 1988)

A□□□ □□□811 □□ □ □□□□□□□□□□d□□□ □□□r□ □□□
d□ □□ □□□□ □□d□r□r□□□d □□□□□□□ □□□□□d □□d □ □r□□d

Sunshine811.com

BID SET, NOT FOR CONSTRUCTION

ENGINEER: NOEL RODRIGUEZ, P.E.
REG. NO. 68830
DATE: 5/21/2019
TEL: 954–761–1073
FAX: 954–987–2949

DRAWN BY: SPH | DATE: 11/27/2018
DESIGNED BY: SPH | SCALE: 1" = 20'
CHECKED BY: LMS | FIELD BOOK: XXXX

CITY OF FORT LAUDERDALE
PUBLIC WORKS DEPARTMENT
ENGINEERING & ARCHITECTURE
100 North Andrews Avenue, Fort Lauderdale, Florida 33301

REVISIONS

NO.	DATE	BY	CHK'D	DESCRIPTION

PROJECT # 12390
SEWER DESIGN AND IMPLEMENTATION PROGRAM
PUMP STATION D-38
ELECTRICAL SITE PLAN

SHEET NO. E-2 OF 15
TOTAL: 25
CAD FILE: 43194–E02–PLAN
DRAWING FILE NO. 4–XXX–XXX

Hazen

HAZEN AND SAWYER
4000 HOLLYWOOD BLVD, SUITE 750N
HOLLYWOOD, FLORIDA 33021

Certificate of Authorization No: 2771

THOMPSON & ASSOCIATES
CERTIFICATE OF AUTHORIZATION 28185
PO BOX 22398, FORT LAUDERDALE, FLORIDA 33335
MIAMI-DADE (786) 897.5919
BROWARD (954) 761.1073
PALM BEACH (561) 932.1668

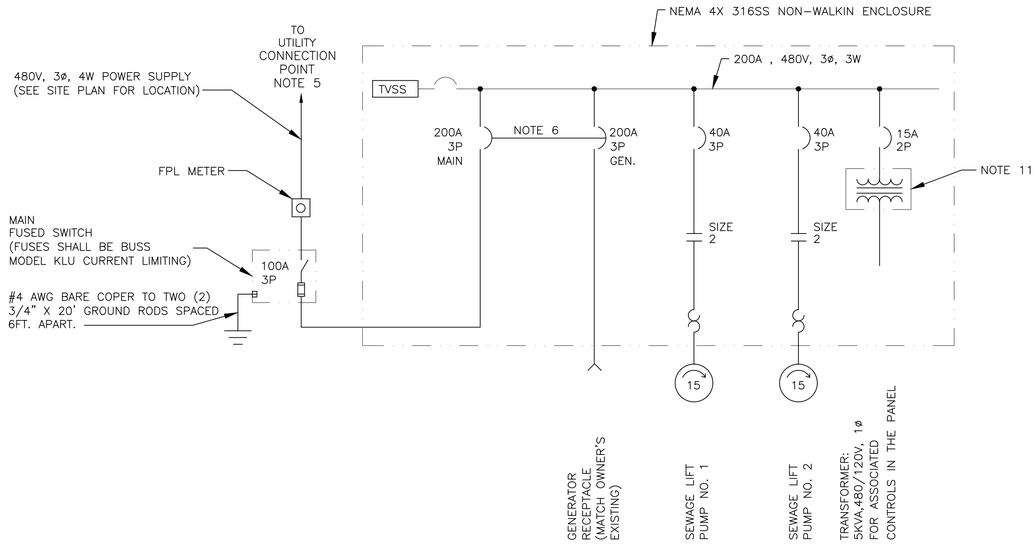

DUPLEX PUMP STATION 38 ONE LINE DIAGRAM

MOTORS ALTERNATE LEAD/LAG LOGIC

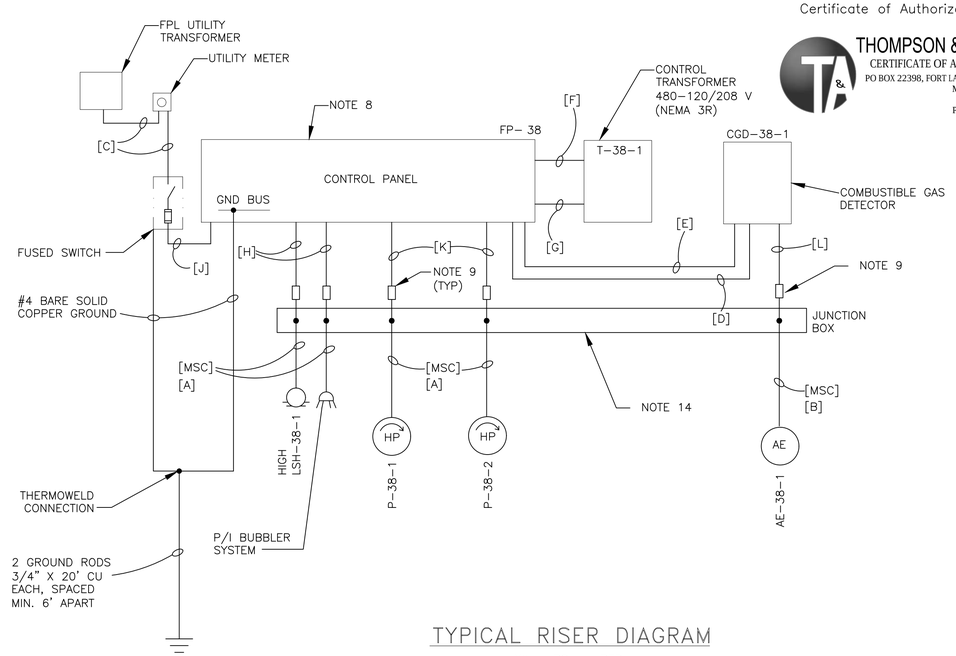

TYPICAL RISER DIAGRAM

XX = PS NUMBER

GENERAL ELECTRICAL NOTES:

1. THE AREA INSIDE THE WET WELL IS A HAZARDOUS, CLASS 1, DIV. 2 LOCATION
2. THE AREA WITHIN 3 FEET FROM THIS HATCH AND 1.5 FEET ABOVE THE WET WELL SLAB IS A HAZARDOUS, CLASS 1, DIV. 2 LOCATION.
3. THE AREA WITHIN A 3 FEET RADIUS FROM THE VENT OPENING IS A HAZARDOUS, CLASS 1, DIV. 2 LOCATION. THE AREA WITHIN A 5 FEET RADIUS FROM THE VENT OPENING IS A HAZARDOUS, CLASS 1, DIV. 2 LOCATION.
4. THE AREA INSIDE THE VALVE VAULT IS A HAZARDOUS, CLASS 1, DIV. 2 LOCATION.
5. CONTRACTOR SHALL PROVIDE NEW UNDERGROUND SERVICE FROM UTILITY CONNECTION POINT TO METER BASE LOCATED AT FIELD PANEL. CONTRACTOR SHALL COORDINATE WITH THE POWER UTILITY IN ORDER TO PROVIDE 480V, 3ø SERVICE TO LIFT STATION. CONTRACTOR SHALL COORDINATE WITH THE OWNER. CONTRACTOR TO INCLUDE ALL REQUIRED MATERIAL AND LABOR INCLUDING METER BASE AND ANY UTILITY FEE, WHICH MAY BE REQUIRED BY THE LOCAL UTILITY FOR THE INSTALLATION OF THE NEW SERVICE. THE CONTRACTOR SHALL INCLUDE A MINIMUM OF 100 FEET OF UNDERGROUND SERVICE FROM THE METER BASE TO THE FPL SERVICE CONNECTION POINT IN THE BASE BID FOR EACH STATION.
6. PROVIDE INTERLOCK SO THAT ONLY ONE CIRCUIT BREAKER (MAIN OR EMERGENCY) CAN BE CLOSED AT A TIME.
7. FIELD PANEL AND CONCRETE SLAB SHALL BE ABLE TO WITHSTAND 140 MPH WIND LOADING: PROVIDE MOUNTING TO SLAB PER MANUFACTURER'S RECOMMENDATIONS.
8. ALL CONDUITS SHALL ENTER THE CONTROL PANEL FROM THE BOTTOM.
9. PROVIDE WIRING METHODS AND MATERIALS SUITABLE FOR A CLASS 1, DIVISION 2 AREA WITHIN ALL HAZARDOUS AREAS. UTILIZE "EYSR" SPLIT CASE FITTING AS MANUFACTURED BY CROUSE-HINDS. IF PVC COATED CONDUITS ARE USED, PEEL OFF THE SECTION WHERE THE SPLIT SEAL GOES, AND AFTER ITS INSTALLED, COAT THE OUTSIDE WITH MANUFACTURERS RECOMMENDED KIT.
10. CONTROL TRASNSFORMER WILL BE STAINLESS STEEL. ALL UNITSTRUT, BOLTS, NUTS, WASHERS, SPRING NUTS, ETC. SHALL BE STAINLESS STEEL. ALL UNISTRUT WILL HAVE PLASTIC BOOTS ON ENDS.
11. TRANSFORMER MUST BE 3R RATED, STAINLESS STEEL AND MOUNTED BY ITSELF (ON THE RACK) OUTSIDE OF ANY ENCLOSURE.
12. FIELD PANEL LOCATIONS ARE TO BE FIELD VERIFIED AND ARE SHOWN FOR CLARITY ONLY.
13. FINAL COMPONENT SIZE AND SELECTION FOR EACH STATION TO BE COORDINATED WITH PUMP SUPPLIER AND SUBJECT TO ACTUAL PUMPS AND MOTORS SELECTED.
14. CONTRACTOR SHALL PROVIDE MINIMUM 24"x24"x8" JUNCTION BOX, NEMA 316 ENCOSURE POWDER COATED WHITE.
15. ALL CONDUIT SHALL BE PVC SCHEDULE 80.

CONDUIT SCHEDULE:

[A] = 2-1/2" SCHEDULE 80 PVC CONDUIT W/ MANUFACTURER SUPPLIED CABLE (MSC)

[B] = 1-1/4" SCHEDULE 80 PVC CONDUIT W/ MANUFACTURER SUPPLIED CABLE (MSC)

[C] = 2-1/2" SCHEDULE 80 PVC CONDUIT W/ 4#3/0

[D] = 1-1/4" SCHEDULE 80 PVC CONDUIT W/ 2#14

[E] = 1-1/4" SCHEDULE 80 PVC CONDUIT W/ 2#12, 1#12G

[F] = 1-1/4" SCHEDULE 80 PVC CONDUIT W/ 2#12, 1#12G

[G] = 1-1/4" SCHEDULE 80 PVC CONDUIT W/ 2#6, 1#6G

[H] = 1" SCHEDULE 80 PVC CONDUIT W/ 2#14

[J] = 2-1/2" SCHEDULE 80 PVC CONDUIT W/ 3#3/0, 1#4G

[K] = 2-1/2" SCHEDULE 80 PVC CONDUIT W/ 3#8, 1#8EG

[L] = 1" SCHEDULE 80 PVC CONDUIT W/ 2 TSP #16

CONNECTED LOAD SUMMARY

	PS-1		
DESCRIPTION	A	KVA	HP
PUMP NO.1	21	11.2	15
PUMP NO.2	21	11.2	15
MISCELLANEOUS	6.25	3	
TOTAL	48.25	25.4	
SERVICE RATING	ADD 25% OF LARGEST MOTOR AT 49 A EQUALS 53.5		

BID SET, NOT FOR CONSTRUCTION

ENGINEER: NOEL RODRIGUEZ, P.E.
REG. No.48430
DATE: 5/21/2019
TEL: 954-761-1073
FAX: 954-987-2949

DRAWN BY: SPH
DATE: 11/27/2018
DESIGNED BY: SPH
SCALE: N/A
CHECKED BY: LMS
FIELD BOOK: XXXX

CITY OF FORT LAUDERDALE
PUBLIC WORKS DEPARTMENT
ENGINEERING & ARCHITECTURE
100 North Andrews Avenue, Fort Lauderdale, Florida 33301

REVISIONS

NO.	DATE	BY	CHK'D	DESCRIPTION

PROJECT # 12390
SEWER DESIGN AND IMPLEMENTATION PROGRAM
PUMP STATION D-38
ELECTRICAL RISER DIAGRAM

SHEET NO. E-3 OF 16
TOTAL: 25
CAD FILE: 43194-E03-DETL
DRAWING FILE NO. 4-XXX-XX

Hazen

HAZEN AND SAWYER
4000 HOLLYWOOD BLVD, SUITE 750N
HOLLYWOOD, FLORIDA 33021
Certificate of Authorization No: 2771

THOMPSON & ASSOCIATES
CERTIFICATE OF AUTHORIZATION 28185
PO BOX 22398, FORT LAUDERDALE, FLORIDA 33335
MIAMI-DADE (786) 897.5919
BROWARD (954) 761.1073
PALM BEACH (561) 932.1668

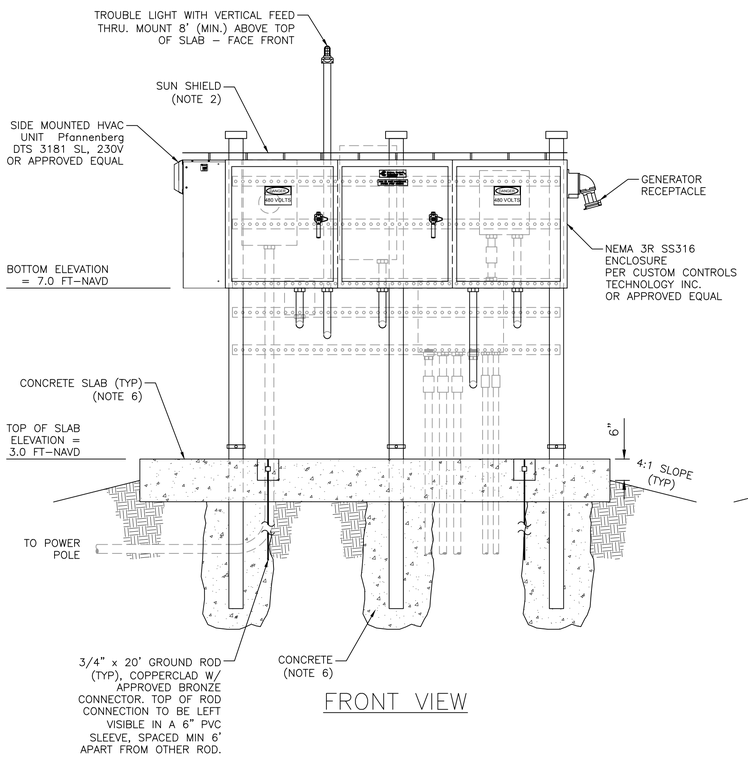

FRONT VIEW

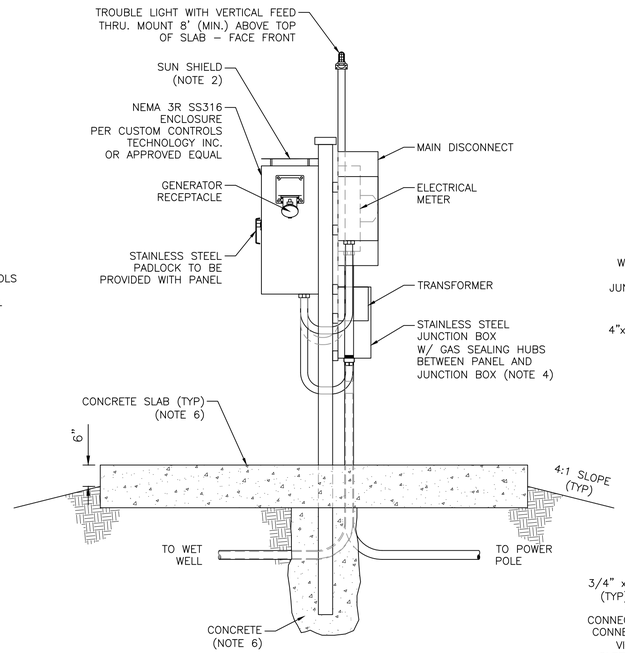

SIDE VIEW

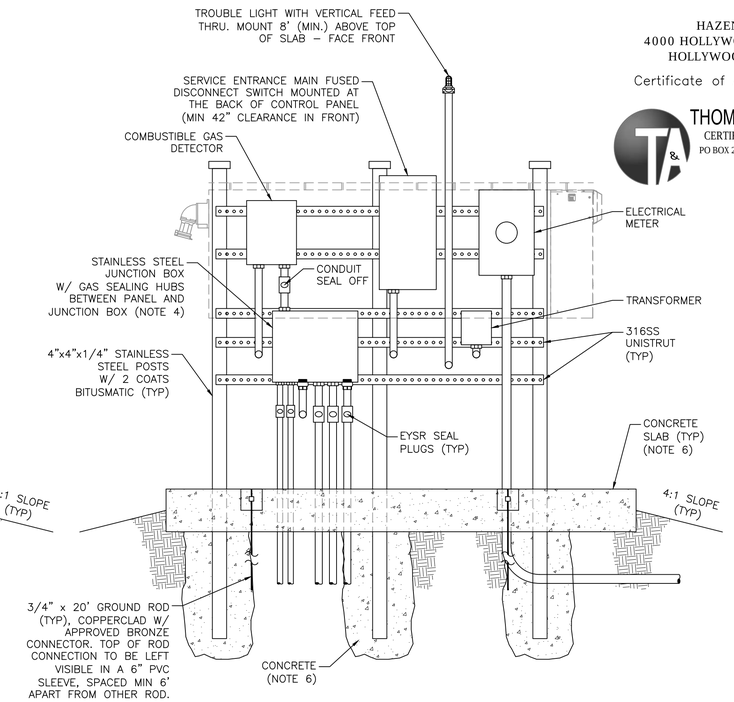

BACK VIEW

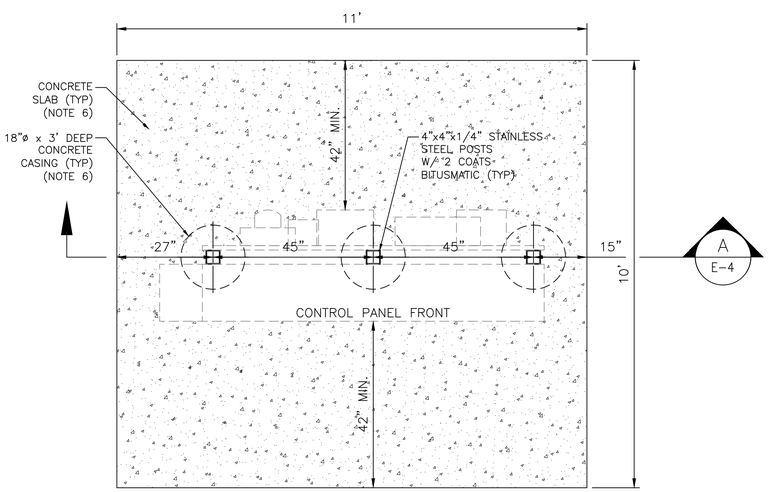

CONCRETE SLAB DETAIL

NOTES:

1. SIZES SHOWN ARE MINIMUM, ADJUST SIZES AS DEEMED NECESSARY WITHOUT ANY ADDITIONAL COST.
2. PROVIDE 12/14 GA. 316 SST SUN SHIELD MOUNTED ON 2" HIGH INSULATING STANDOFFS. STANDOFFS SHALL BE INSTALLED AS TO MAINTAIN THE NEMA RATING OF THE ENCLOSURE. DIMENSION AS REQUIRED BY PANEL MANUFACTURER.
3. ALL EXPOSED METAL PARTS ARE TO BE BONDED TO THE GROUND RING.
4. PROVIDE A 24"x24"x8" NEMA 4X 316 STAINLESS STEEL ENCLOSURE WITH TERMINALS. JUNCTION BOX SHALL BE PROVIDED WITH BARRIER BETWEEN POWER AND INSTRUMENTATION.
5. BOTTOM OF CONTROL PANEL TO BE ABOVE 100 YEAR FLOOD ELEVATION 7.00 FT–NAVD.
6. CONCRETE SHALL HAVE A 28–DAY STRENGTH OF 4000 PSI MIN.
7. REINFORCING BARS SHALL BE DEFORMED. GRADE 60 AS PER ASTM A–615.
8. GRADE SLAB FOUNDATION SHALL BE SUPPORTED ON WELL COMPACTED FILL, WITH MINIMUM COMPACTION OF 95" OF MAXIMUM DRY DENSITY FOR LAYERS AS VERIFIED BY FIELD DENSITY TESTS AS PER ASTM D1557.
9. ALL WELDING TO BE IN ACCORDANCE WITH AWS CURRENT STRUCTURAL WELDING CODE. WELD ELECTRODE SHALL BE E70XX. RUSTPROOF ALL FIELD WELDS AND SURROUNDING AREA WITH 2 COATS OF ZINC BASED PAINT.
10. THE DESIGN OF THE STEEL AND UNI–STRUT CHANNELS POSTS COMPLIES WITH THE REQUIREMENTS OF THE ASCE 7–10 CODE.
11. THE UNI–STRUT FRAMING CHANNELS SHALL BE ATTACHED WITH FITTINGS AND FASTENING STUDS/BOLTS, AND/OR SCREWS AS SUPPLIED BY UNI–STRUT CORP.

DUPLEX PUMP PANEL LAYOUT

NTS

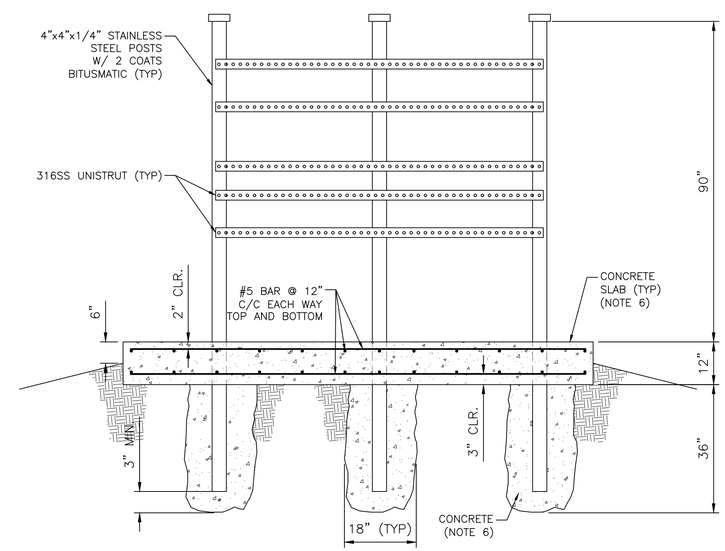

CONCRETE SLAB REINFORCEMENT

SECTION A / E-4

SCALE: N.T.S.

BID SET, NOT FOR CONSTRUCTION

ENGINEER: NOEL RODRIGUEZ, P.E.
REG. No: 66390
DATE: 5/21/2019
TEL: 954-761-1073
FAX: 954-987-2949

DRAWN BY:	DATE: 11/27/2018
SPH	
DESIGNED BY: SPH	SCALE: N/A
CHECKED BY: LMS	FIELD BOOK: XXXX

CITY of FORT LAUDERDALE
PUBLIC WORKS DEPARTMENT
ENGINEERING & ARCHITECTURE
100 North Andrews Avenue, Fort Lauderdale, Florida 33301

REVISIONS

NO.	DATE	BY	CHK'D	DESCRIPTION

PROJECT # 12390
SEWER DESIGN AND IMPLEMENTATION PROGRAM
PUMP STATION D-38
ELECTRICAL PANEL LAYOUT

SHEET NO.	OF
E-4	17
TOTAL:	25
CAD FILE: 43194-E04-DETL	
DRAWING FILE NO. 4-XXX-XX	

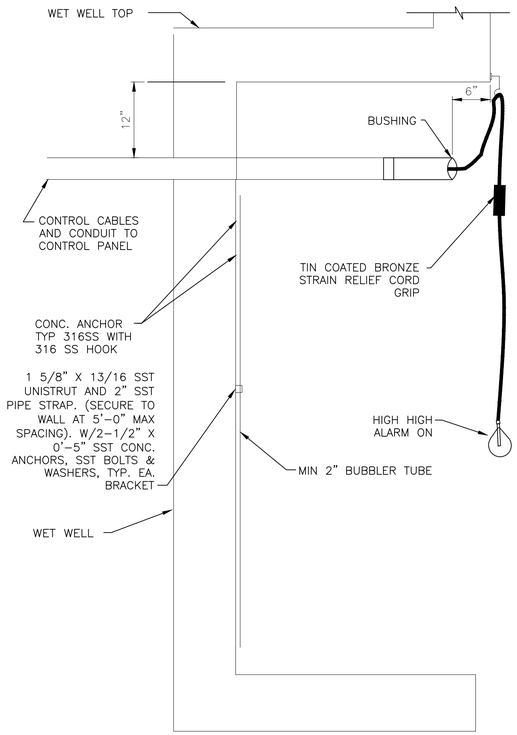

LEVEL CONTROL NOTES:

1. UTILIZE P/I (ECO-1) (WIKA) OR SICK PBT 605 2953 AS THE PRIMARY LEVEL CONTROL.
2. REFER TO MECH. DWGS. FOR LEVEL SETPOINT ELEVATIONS.
3. INSTALL BUBBLER TUBE (MIN 2" PVC). USE SST HARDWARE.
4. PRESSURE TRANSDUCER IS TO BE LOCATED ON OPPOSITE SIDE OF WETWELL FROM INFLUENT LINE AND IS NOT TO INTERFIER WITH PUMP OPERATION.

LEVEL SWITCH & BUBBLER SUPPORT

NTS

E-1

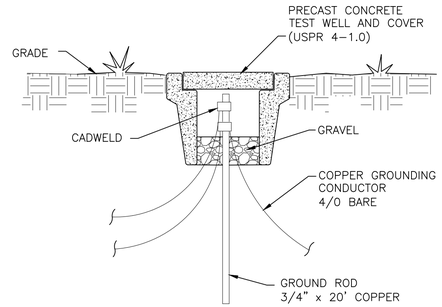

GROUND TEST WELL

NTS

E-5

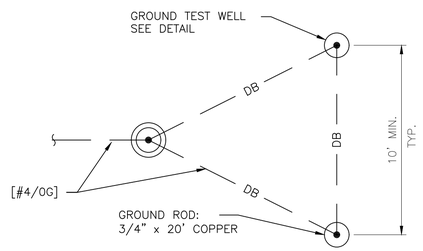

PLAN

GROUND TRIANGLE

NTS

E-6

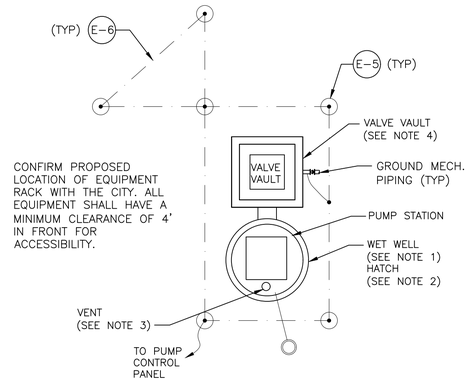

CONFIRM PROPOSED LOCATION OF EQUIPMENT RACK WITH THE CITY. ALL EQUIPMENT SHALL HAVE A MINIMUM CLEARANCE OF 4' IN FRONT FOR ACCESSIBILITY.

CONFIRM BYPASS METHOD WITH CITY.

TYPICAL SITE PLAN

NTS

NOTES:

1. THE AREA INSIDE THE WET WELL IS A HAZARDOUS, CLASS 1, DIV. 2 LOCATION
2. THE AREA WITHIN 3 FEET FROM THE ACCESS HATCH AND 1.5 FEET ABOVE THE WET WELL SLAB IS A HAZARDOUS, CLASS 1, DIV. 2 LOCATION.
3. THE AREA WITHIN A 3 FEET RADIUS FROM THE VENT OPENING IS A HAZARDOUS, CLASS 1, DIV. 2 LOCATION.
4. THE AREA INSIDE THE VALVE VAULT IS A HAZARDOUS, CLASS 1, DIV. 2 LOCATION.

Hazen

HAZEN AND SAWYER
4000 HOLLYWOOD BLVD, SUITE 750N
HOLLYWOOD, FLORIDA 33021

Certificate of Authorization No: 2771

THOMPSON & ASSOCIATES
CERTIFICATE OF AUTHORIZATION 28185
PO BOX 22398, FORT LAUDERDALE, FLORIDA 33335
MIAMI-DADE (786) 897.5919
BROWARD (954) 761.1073
PALM BEACH (561) 932.1668

ENGINEER: NOEL RODRIGUEZ, P.E.
REG. No: 48480
DATE: 5/21/2019
TEL: 954-761-1073
FAX: 954-987-2949

DRAWN BY: SPH
DATE: 11/27/2018
DESIGNED BY: SPH
SCALE: N/A
CHECKED BY: LMS
FIELD BOOK: XXXX

CITY OF FORT LAUDERDALE
PUBLIC WORKS DEPARTMENT
ENGINEERING & ARCHITECTURE
100 North Andrews Avenue, Fort Lauderdale, Florida 33301

REVISIONS

NO.	DATE	BY	CHK'D	DESCRIPTION

PROJECT # 12390
SEWER DESIGN AND IMPLEMENTATION PROGRAM
PUMP STATION D-38
ELECTRICAL DETAILS

BID SET, NOT FOR CONSTRUCTION

SHEET NO. E-5 OF 18

TOTAL: 25

CAD FILE: 43194-E05-DETL

DRAWING FILE NO. 4-XXX-XXXX

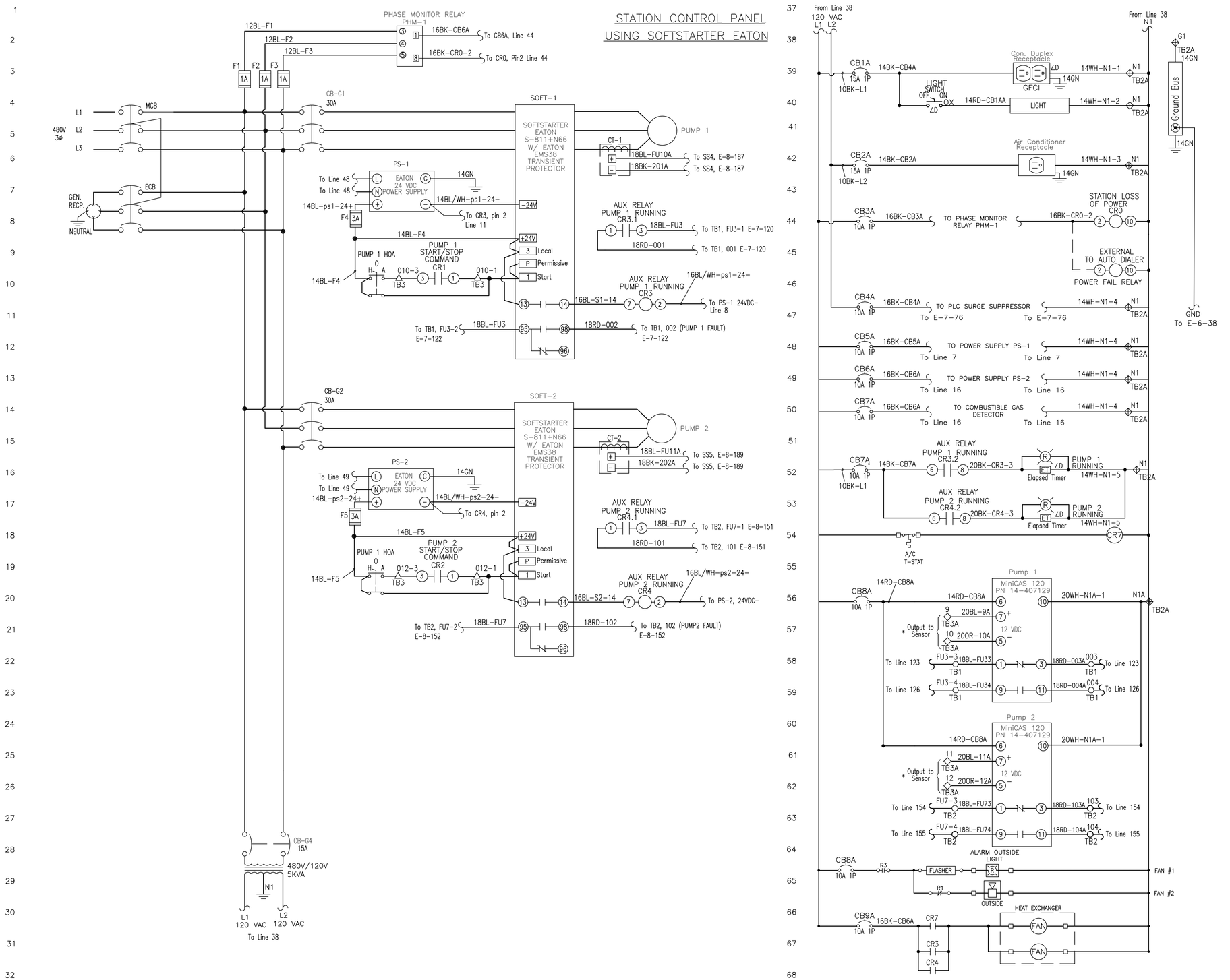

Hazen

HAZEN AND SAWYER
4000 HOLLYWOOD BLVD, SUITE 750N
HOLLYWOOD, FLORIDA 33021

Certificate of Authorization No: 2771

THOMPSON & ASSOCIATES
CERTIFICATE OF AUTHORIZATION 28185
PO BOX 22398, FORT LAUDERDALE, FLORIDA 33335
MIAMI-DADE (786) 897.5919
BROWARD (954) 761.1073
PALM BEACH (561) 932.1668

ENGINEER: NOEL RODRIGUEZ, P.E.
REG. NO. 48430
DATE: 5/21/2019
TEL: 954-761-1073
FAX: 954-987-2949

DRAWN BY:	DATE:	DESIGNED BY:	SCALE:	CHECKED BY:	FIELD BOOK:
SPH	11/27/2018	SPH	N/A	LMS	XXXX

CITY OF FORT LAUDERDALE
PUBLIC WORKS DEPARTMENT
ENGINEERING & ARCHITECTURE
100 North Andrews Avenue, Fort Lauderdale, Florida 33301

REVISIONS

NO.	DATE	BY	CHK'D	DESCRIPTION

PROJECT # 12390
SEWER DESIGN AND IMPLEMENTATION PROGRAM
PUMP STATION D-38
CONTROL PANEL DETAIL

BID SET, NOT FOR CONSTRUCTION

SHEET NO.	OF
E-6	19

TOTAL: 25

CAD FILE: 43194-E06-DETL

DRAWING FILE NO. 4-XXXX-XXXX

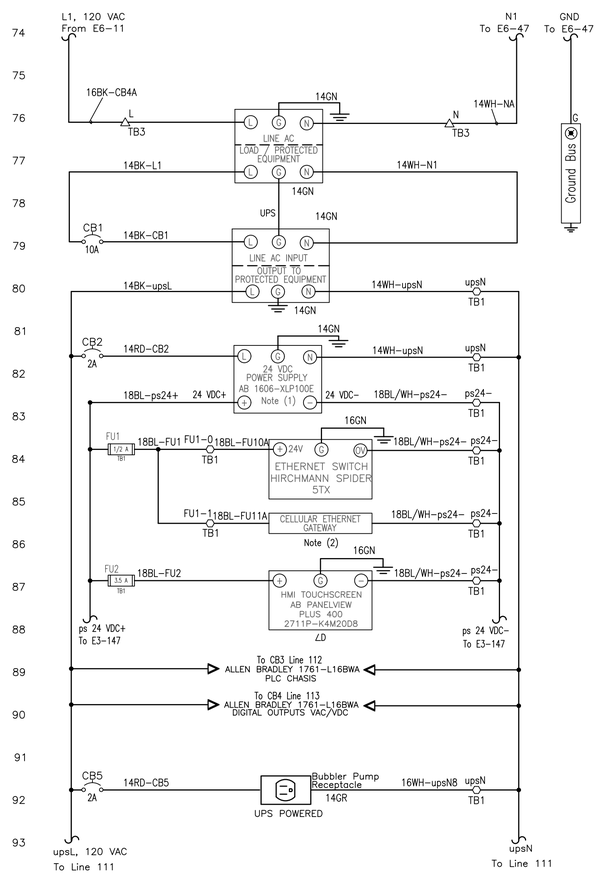

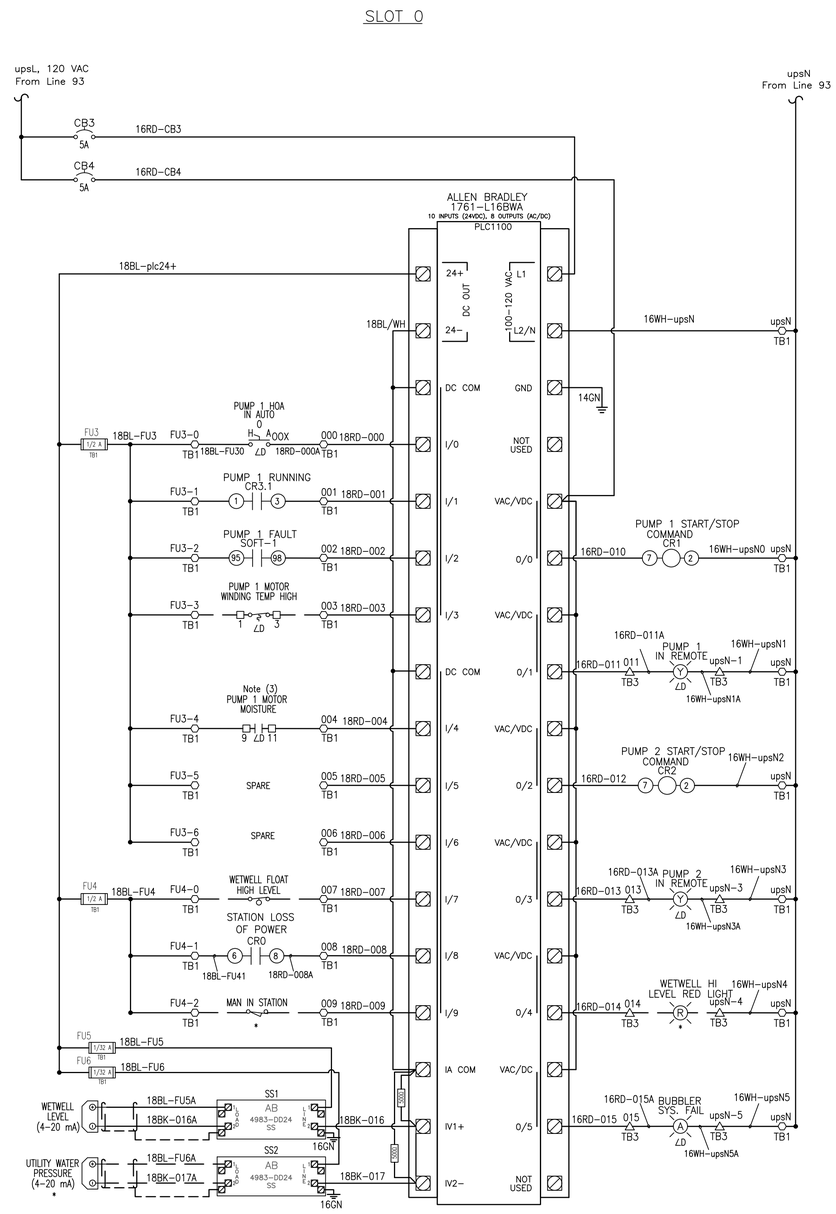

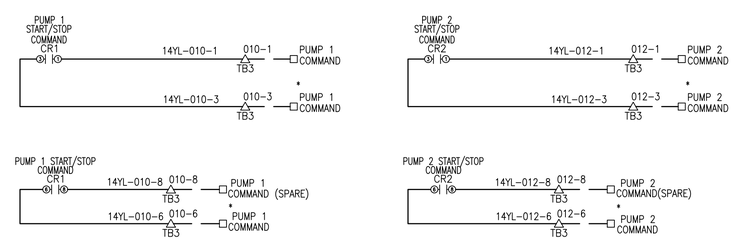

GENERAL ELECTRICAL NOTES:

1. FINAL COMPONENT SIZE AND SELECTION TO BE DETERMINED BY SYSTEM SUPPLIER IN COORDINATION WITH CITY. IF PANEL VIEW PLUS 400 OR 600 IS REQUIRED, CHANGE POWER SUPPLY TO AB MODEL 1606-XLP100E.
2. SIERRA MODEL Raven XE V2221E-V CELLULAR RADIO TO BE PROVIDED AND CONFIGURED BY CITY.
3. PUMP SEAL FAIL RELAY. IF NEEDED AS PER SPEC OF PUMP MANUFACTURER.
4. ∠D DENOTES DEVICE MOUNTED ON PANEL DOOR.
5. WIRING GUIDE: 18BL-FU1
   - WIRE NUMBER (CHARACTERS TO RIGHT OF DASH ONLY)
   - WIRE COLOR
   - WIRE GAUGE IN AWG
6. * DENOTES COMPONENT MOUNTED OUTSIDE CONTROL PANEL
7. — — DENOTES FIELD WIRING OUTSIDE CONTROL PANEL
   - ○ TB1 Terminal Block
   - ○ TB2 Terminal Block
   - △ TB3 Terminal Block
   - ⊕ TB2A Terminal Block
   - ◇ TB3A Terminal Block

Hazen

HAZEN AND SAWYER
4000 HOLLYWOOD BLVD, SUITE 750N
HOLLYWOOD, FLORIDA 33021

Certificate of Authorization No: 2771

THOMPSON & ASSOCIATES
CERTIFICATE OF AUTHORIZATION 28185
PO BOX 22398, FORT LAUDERDALE, FLORIDA 33335
MIAMI-DADE (786) 897.5919
BROWARD (954) 761.1073
PALM BEACH (561) 932.1668

ENGINEER: NOEL RODRIGUEZ, P.E.
REG. NO: 48830
DATE: 5/21/2019
TEL: 954-761-1073
FAX: 954-987-2949

DRAWN BY: SPH
DATE: 11/27/2018
DESIGNED BY: SPH
SCALE: N/A
CHECKED BY: LMS
FIELD BOOK: XXXX

CITY OF FORT LAUDERDALE
PUBLIC WORKS DEPARTMENT
ENGINEERING & ARCHITECTURE
100 North Andrews Avenue, Fort Lauderdale, Florida 33301

REVISIONS

NO.	DATE	BY	CHK'D	DESCRIPTION

BID SET, NOT FOR CONSTRUCTION

PROJECT # 12390
SEWER DESIGN AND
IMPLEMENTATION PROGRAM
PUMP STATION D-38
DUPLEX CONTROL DIAGRAM

SHEET NO. E-7 OF 20
TOTAL: 25
CAD FILE: 43194-E07-DETL
DRAWING FILE NO. 4-XXX-XX-XX

SLOT 1

WHEN WIRING 1762-IQ16 IO CARD USE TOP WIRE DUCT FOR FIRST 8 INPUTS AND BOTTOM WIRE DUCT FOR LAST 8 INPUTS.

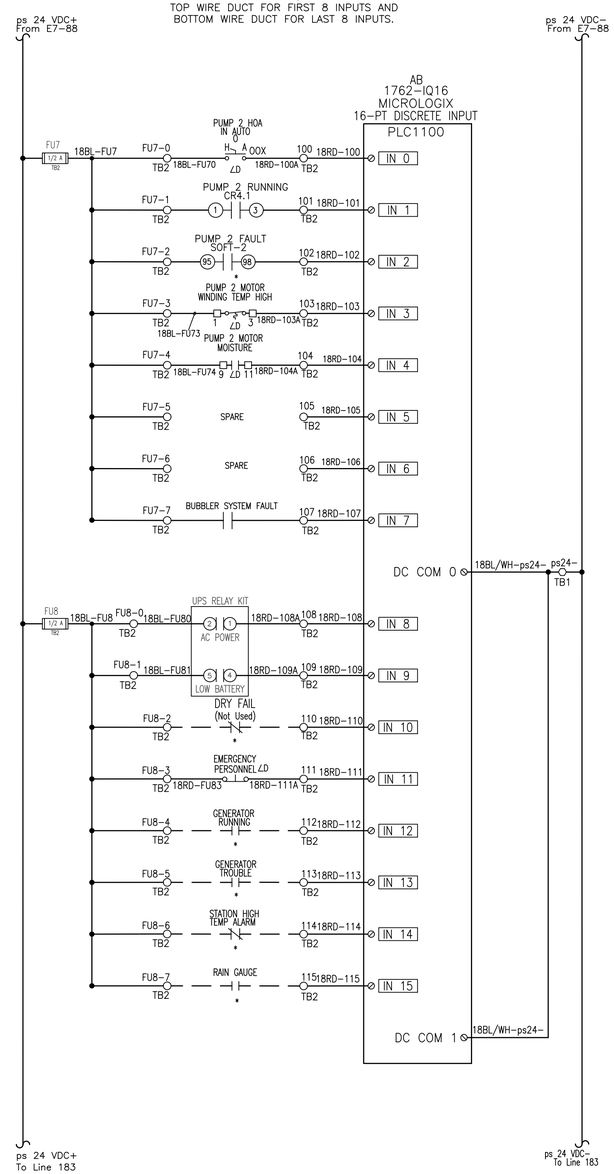

SLOT 2

WHEN WIRING 1762-IQ80W6 IO CARD USE TOP WIRE DUCT FOR DIGITAL INPUTS AND BOTTOM WIRE DUCT FOR DIGITAL OUTPUTS.

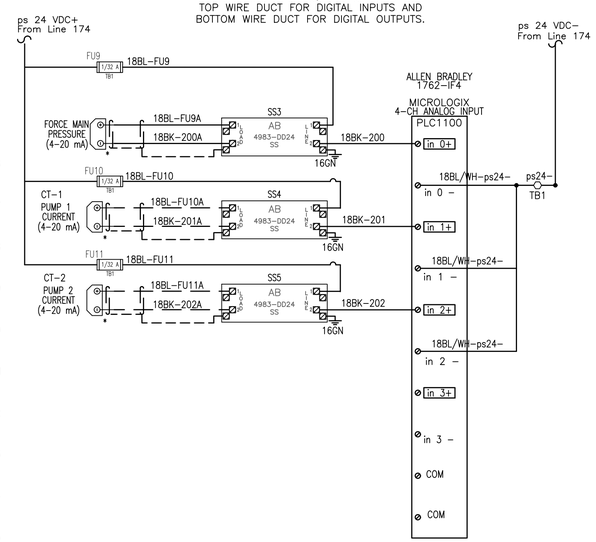

GENERAL ELECTRICAL NOTES:

1. FINAL COMPONENT SIZE AND SELECTION TO BE DETERMINED BY SYSTEM SUPPLIER IN COORDINATION WITH CITY. IF PANEL VIEW PLUS 400 OR 600 IS REQUIRED, CHANGE POWER SUPPLY TO AB MODEL 1606-XLP100E.
2. SIERRA MODEL Raven XE V2221E-V CELLULAR RADIO TO BE PROVIDED AND CONFIGURED BY CITY.
3. PUMP SEAL FAIL RELAY. IF NEEDED AS PER SPEC OF PUMP MANUFACTURER.
4. ∠D DENOTES DEVICE MOUNTED ON PANEL DOOR.
5. WIRING GUIDE: 18BL-FU1
   - WIRE NUMBER (CHARACTERS TO RIGHT OF DASH ONLY)
   - WIRE COLOR
   - WIRE GAUGE IN AWG
6. * DENOTES COMPONENT MOUNTED OUTSIDE CONTROL PANEL
7. — — DENOTES FIELD WIRING OUTSIDE CONTROL PANEL
   - ○ TB1 Terminal Block
   - ○ TB2 Terminal Block
   - △ TB3 Terminal Block
   - ⊕ TB2A Terminal Block
   - ◇ TB3A Terminal Block

Hazen

HAZEN AND SAWYER
4000 HOLLYWOOD BLVD, SUITE 750N
HOLLYWOOD, FLORIDA 33021
Certificate of Authorization No: 2771

THOMPSON & ASSOCIATES
CERTIFICATE OF AUTHORIZATION 28185
PO BOX 22398, FORT LAUDERDALE, FLORIDA 33335
MIAMI-DADE (786) 897.5919
BROWARD (954) 761.1073
PALM BEACH (561) 932.1668

ENGINEER: NOEL RODRIGUEZ, P.E.
REG. NO: 68300
DATE: 5/21/2019
TEL: 954-761-1073
FAX: 954-987-2949

DRAWN BY: SPH | DATE: 11/27/2018
DESIGNED BY: SPH | SCALE: N/A
CHECKED BY: LMS | FIELD BOOK: XXXX

CITY OF FORT LAUDERDALE
PUBLIC WORKS DEPARTMENT
ENGINEERING & ARCHITECTURE
100 North Andrews Avenue, Fort Lauderdale, Florida 33301

REVISIONS

NO.	DATE	BY	CHK'D	DESCRIPTION

BID SET, NOT FOR CONSTRUCTION

PROJECT # 12390
SEWER DESIGN AND IMPLEMENTATION PROGRAM
PUMP STATION D-38
DUPLEX CONTROL DIAGRAM

SHEET NO. E-8 OF 21
TOTAL: 25
CAD FILE: 43194-E08-DETL
DRAWING FILE NO. 4-XXX-XXX

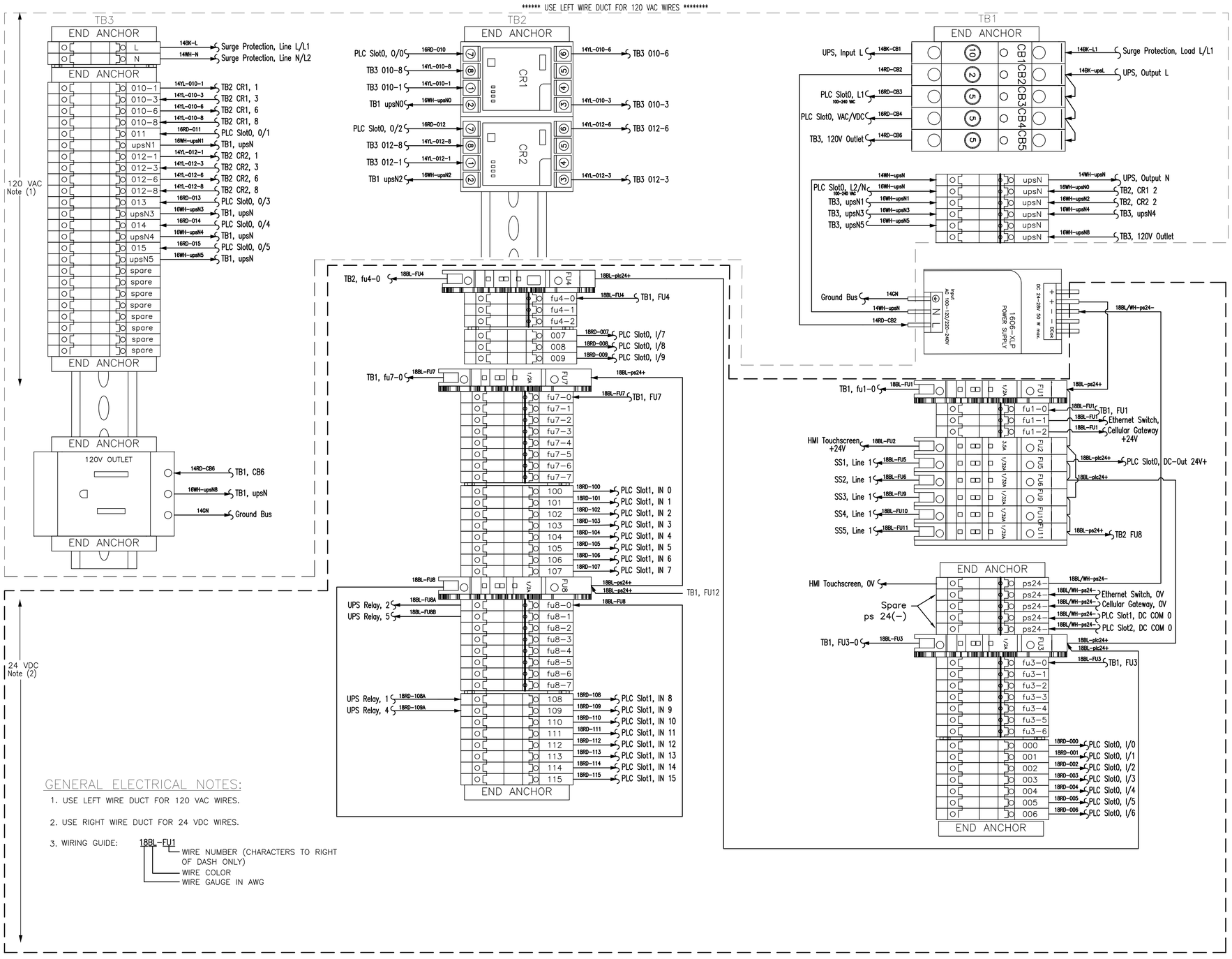

Hazen

HAZEN AND SAWYER
4000 HOLLYWOOD BLVD, SUITE 750N
HOLLYWOOD, FLORIDA 33021
Certificate of Authorization No: 2771

THOMPSON & ASSOCIATES
CERTIFICATE OF AUTHORIZATION 28185
PO BOX 22398, FORT LAUDERDALE, FLORIDA 33335
MIAMI-DADE (786) 897.5919
BROWARD (954) 761.1073
PALM BEACH (561) 932.1668

ENGINEER: NOEL RODRIGUEZ, P.E.
REG. No: 48800
DATE: 5/21/2019
TEL: 954-761-1073
FAX: 954-987-2949

DRAWN BY: SPH	DATE: 11/27/2018
DESIGNED BY: SPH	SCALE: N/A
CHECKED BY: LMS	
FIELD BOOK: XXXX	

CITY OF FORT LAUDERDALE
PUBLIC WORKS DEPARTMENT
ENGINEERING & ARCHITECTURE
100 North Andrews Avenue, Fort Lauderdale, Florida 33301

REVISIONS

NO.	DATE	BY	CHK'D	DESCRIPTION

BID SET, NOT FOR CONSTRUCTION

PROJECT # 12390
SEWER DESIGN AND IMPLEMENTATION PROGRAM
PUMP STATION D-38
ELECTRICAL SCHEMATIC

SHEET NO. E-9 OF 22
TOTAL: 25
CAD FILE: 43194-E09-DETL
DRAWING FILE NO. 4-XXX-XX-XXX TS0496

Hazen

HAZEN AND SAWYER
4000 HOLLYWOOD BLVD, SUITE 750N
HOLLYWOOD, FLORIDA 33021

Certificate of Authorization No: 2771

THOMPSON & ASSOCIATES
CERTIFICATE OF AUTHORIZATION 28185
PO BOX 22398, FORT LAUDERDALE, FLORIDA 33335
MIAMI-DADE (786) 897.5919
BROWARD (954) 761.1073
PALM BEACH (561) 932.1668

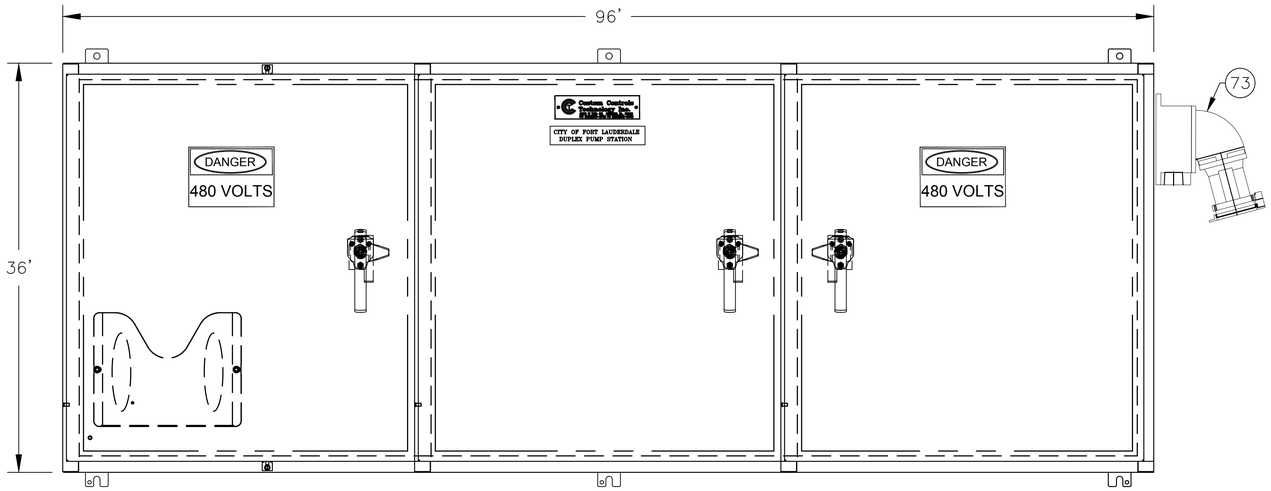

OUTER DOORS VIEW

NOTES:

1. ENCLOSURE NEMA 3RSS316 WITH LIFTING EYES, DOOR STOPS, DRIP SHIELDS, THREE POINT LATCH HANDLES, INNER DOORS.
2. FURNISH PANEL ENCLOSURE WITH SIDE MOUNTED COOLING UNITS, Pfannenberg DTS 3181 SL, 230V OR APPROVED EQUAL, SIZED APPROPRIATELY TO DISSIPATE EXPECTED INTERNAL AND AMBIENT HEAT LOADS. COOLING UNIT SHALL BE CONSTRUCTED OF A CORROSION RESISTANT CORE, STAINLESS STEEL ENCLOSURE.
3. CONTROL PANEL BY CUSTOM CONTROLS TECHNOLOGY, INC., OR APPROVED EQUAL.

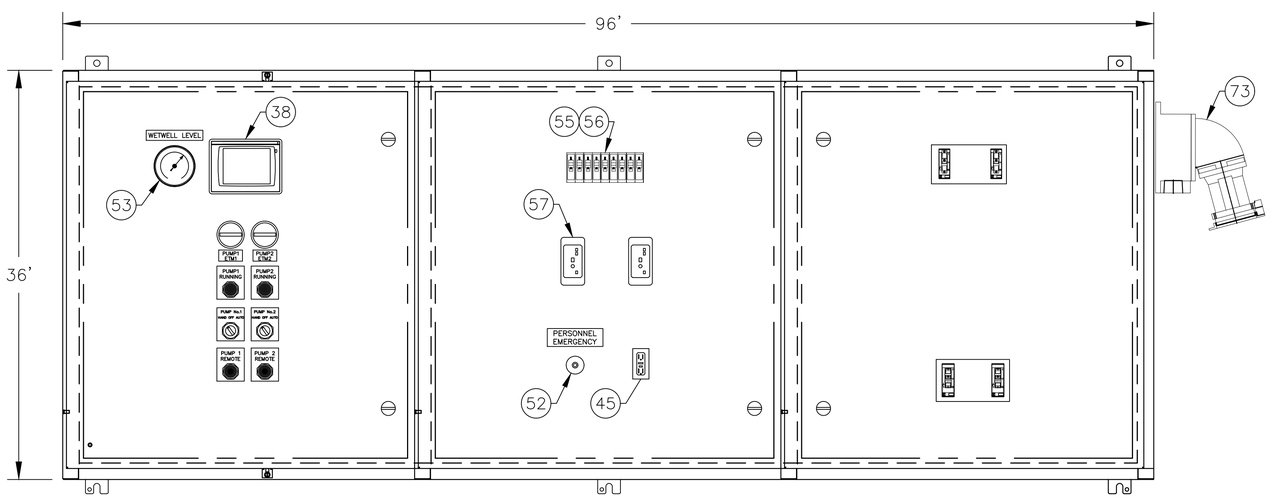

INNER DOORS VIEW

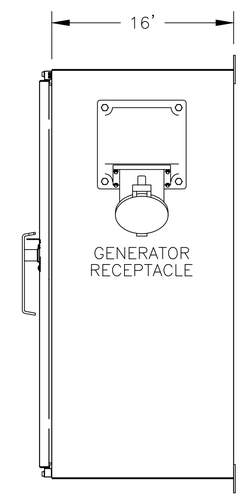

RIGHT SIDE VIEW

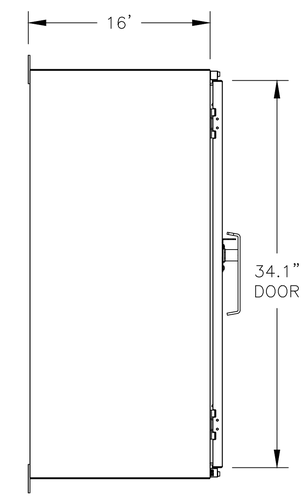

LEFT SIDE VIEW

CONTROL PANEL LAYOUT
NTS

BID SET, NOT FOR CONSTRUCTION

ENGINEER: NOEL RODRIGUEZ, P.E.
REG. No: 48380
DATE: 5/21/2019
TEL: 954-761-1073
FAX: 954-987-2949

DRAWN BY: SPH	DATE: 11/27/2018
DESIGNED BY: SPH	SCALE: N/A
CHECKED BY: LMS	
FIELD BOOK: XXXX	

CITY OF FORT LAUDERDALE
PUBLIC WORKS DEPARTMENT
ENGINEERING & ARCHITECTURE
100 North Andrews Avenue, Fort Lauderdale, Florida 33301

REVISIONS

NO.	DATE	BY	CHK'D	DESCRIPTION

PROJECT # 12390
SEWER DESIGN AND IMPLEMENTATION PROGRAM
PUMP STATION D-38
CONTROL PANEL LAYOUT

SHEET NO. E-10 OF 23
TOTAL: 25
CAD FILE: 43194-E10-DETL
DRAWING FILE NO. 4-XXX-XXXX

Hazen

HAZEN AND SAWYER
4000 HOLLYWOOD BLVD, SUITE 750N
HOLLYWOOD, FLORIDA 33021
Certificate of Authorization No: 2771

THOMPSON & ASSOCIATES
CERTIFICATE OF AUTHORIZATION 28185
PO BOX 22398, FORT LAUDERDALE, FLORIDA 33335
MIAMI-DADE (786) 897.5919
BROWARD (954) 761.1073
PALM BEACH (561) 932.1668

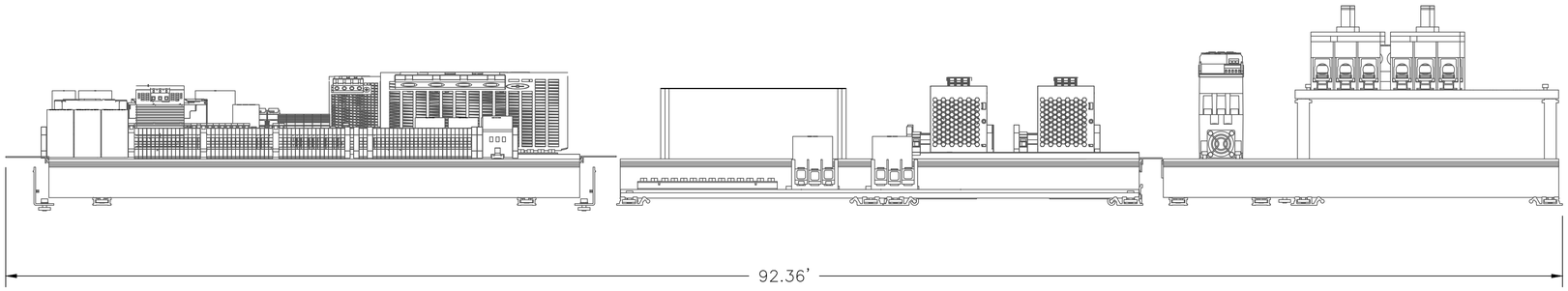

BOTTOM VIEW

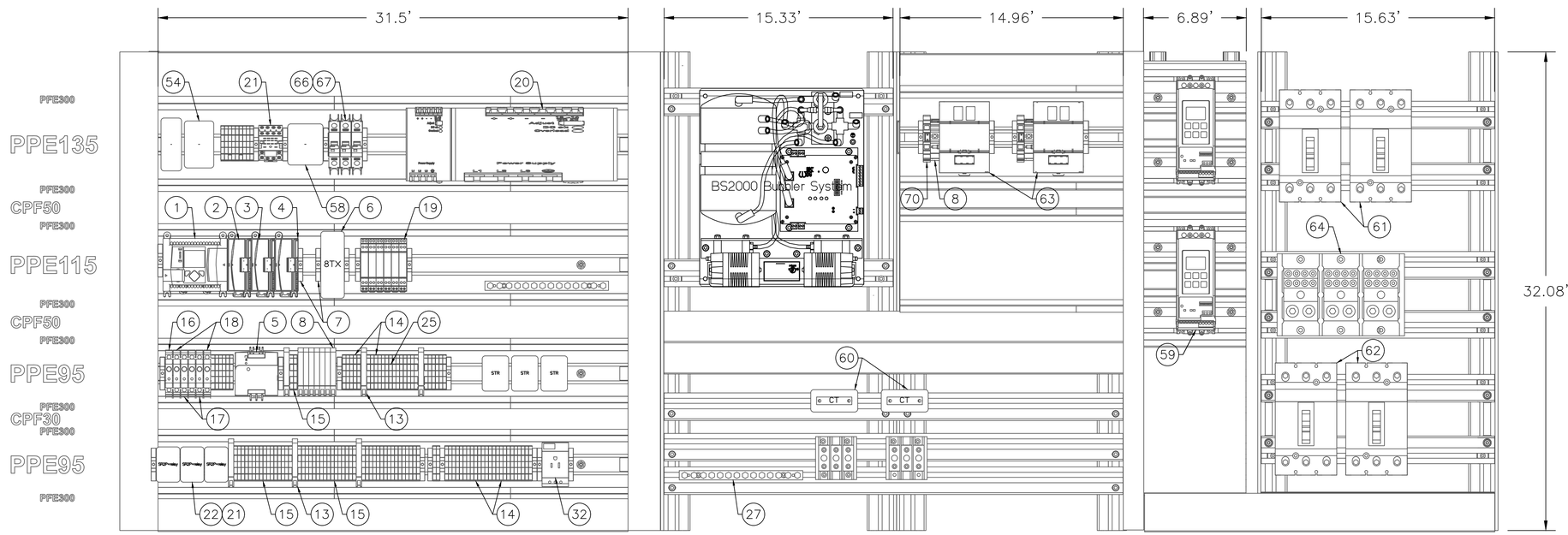

FRONT VIEW

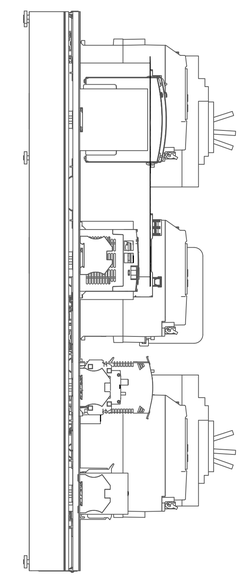

SIDE VIEW

NOTES:
1. SUBPANAL LAYOUT AND DESIGN BY SATIE SYSTEM (WWW.SATIENA.COM), OR APPROVED EQUAL.

SUBPANEL LAYOUT
NTS

BID SET, NOT FOR CONSTRUCTION

ENGINEER: NOEL RODRIGUEZ, P.E.
REG. No: 48300
DATE: 5/21/2019
TEL: 954-761-1073
FAX: 954-987-2949

DRAWN BY: SPH
DATE: 11/27/2018
DESIGNED BY: SPH
SCALE: N/A
CHECKED BY: LMS
FIELD BOOK: XXXX

CITY OF FORT LAUDERDALE
PUBLIC WORKS DEPARTMENT
ENGINEERING & ARCHITECTURE
100 North Andrews Avenue, Fort Lauderdale, Florida 33301

REVISIONS

NO.	DATE	BY	CHK'D	DESCRIPTION

PROJECT # 12390
SEWER DESIGN AND IMPLEMENTATION PROGRAM
PUMP STATION D-38
SUBPANEL LAYOUT

SHEET NO. E-11 OF 24
TOTAL: 25
CAD FILE: 43194-E11-DETL
DRAWING FILE NO. 4-XXX-XXXX
CAM TP0496

Pos	Qty	Description	Manufacturer Part Number
1	1	Micrologix 1100 Programable Controller	Allen-Bradley, 1763-L16BWA
2	1	16-Point Sink/Source 24V Input Module	Allen-Bradley, 1762-IQ16
4	1	4-Channel Current Analog Input Module	Allen-Bradley, 1762-IF4
5	1	Compact Power Supply, Output 24-28V DC, 100W, 4A Input Voltage 100/240V AC	Allen-Bradley, 1606-XLP100E
6	1	Spider 5TX Industrial Rail Ethernet Switch	Hirschmann, 943 824-002
7	25	End Anchor, used w/ Standard 35mm Din Rail, Gray	Allen-Bradley, 1492-EAJ35
8	13	Finger-Safe Single Circuit Fuse Block, No Blown Fuse Indicator, #30 - #12 AWG, Black	Allen-Bradley, 1492-H6
9	5	1/2 A, Fast-Acting Glass Body Fuse, 1/4in x 1 1/4in	Littelfuse, 0312.500
10	6	1/32 A, Fast-Acting Glass Body Fuse, 1/4in x 1 1/4in	Grainger, ICM28
11	1	2 A, Slo-Blo Glass Body Fuse, 1/4in x 1 1/4 in	Littelfuse, 0313.002
13	8	End Barrier Single Circuit Fuse or Isolation Blocks, Black	Allen-Bradley, 1492-N37
14	100	IEC 1-Circuit Feed-Through Block, 4mm² max. wire, Gray	Allen-Bradley, 1492-J4
15	12	End Barrier, Gray	Allen-Bradley, 1492-EBJ3
16	1	Miniature Circuit Breaker, 10 Amp Rating	Allen-Bradley, 1492-GH100
17	2	Miniature Circuit Breaker, 5 Amp Rating	Allen-Bradley, 1492-GH050
18	2	Miniature Circuit Breaker, 2 Amp Rating	Allen-Bradley, 1492-GH020
19	5	Surge and Filter Protection, Din Rail Mount, Dataline UL 497B, 24V DC.	Allen-Bradley, 4983-DD24
20	1	DIN Rail AC SOLA-HD Uninterruptible Power System SDU - A Series and SDU CF Dry Contact I/O RELAY CARD	Emmerson SDU500A + SDUCFRELAYCARD
21	3	Control Relay Octal 8 Pin /Coil 120 VAC/ DPDT, 10 Amp Rating	750XBXRM4L-120A
22	3	DIN Rail Mount Relay Socket Screw Type, 8 pin	IDEC, SR2P-06
23	1	Enclosure Back panel, White 57"x 33"	Hoffman, A60P36
24	1	Enclosure Cabinet SS 316 Nema 4X One-Door, 3 Point Latch, 60 x 36 x 16	Hoffman, A60H3616SS6LP3PT
25	6	Center Jumpers	Allen-Bradley, 1492-CJJ6-10
26	1	Snap-In Marker Card, White	Allen-Bradley, 1492-M6X12
27	1	Ground Bar Kit, 14 Position #14-4AWG	ElectriCenter, ECGB14
28	4	DIN Rail 35mm aluminum 1m	IDEC, BNDN-1000
29	3	Panduct Type MC Metric Narrow Slot Wiring Duct, Gray 0.97 x 2.85 in, 2m	Panduit, MC25X75IG2
30	3	Wiring Duct cover, 2m	Panduit, C25IG2
32	1	Control cabinet outlet for mounting on DIN rails	Phoenix Contact SD-US/SC/LA/GY - 2963860
33	2	500 Ohm Resistors, 1/2 WATT	
34	2	CAT 5E Ethernet Patch cable 2 Ft	
38	1	Maple Systems 7" HMI Touchscreen 24VDC	MapleSystems HMI5070B
39	2	Yellow, Pilot Light, LED, 120 VAC	Allen-Bradley, 800FD-P5N5
40	2	Red, Pilot Light, LED, 120 VAC	Allen-Bradley, 800FD-P4N5
41		Ambar, Pilot Light, LED, 120 VAC	Allen-Bradley, 800FD-P0N5
42	2	UWZ Series AC Hour Meters, Flush Mount, 120 VAC	Intermatic, UWZ52E-120U
44	1	18" LED Undercabinet, White + 48" Power Cord	Halo HU1018D930P + HU105P
45	1	GFI Dual Receptacle, 20 Amp	Hubble GFWRST20W or simmilar
48	2	30mm Selector Switch 3 Position, Type K, Black Knob	Square D, 9001KS43B/Legent Plat
49	6	30mm Contact Block 1N/O 1N/C	Square D, 9001KA1
50	2	Selector Padlock	Square D, 9001K7
52	1	40mm Mushroom Head Button, Two Positions, Non-illuminated	Cutler-Hammer, HT8DBR
53	1	Pressure Gauge, 4" Dial, 1/4" Process Connection, Range 0-200", Panel Mount with Front Flange.	McDaniel Controls
54	1	DIN rail mounted Cabinet thermostat, 32-140 F, NO contact	Pfannenberg FLZ 530 PN#17121000010
55	6	Miniature Circuit Breaker (QOU) Standard, 10A, 1 Pole, 120/240 VAC, HACR Rated	Square D, QOU110
56	2	Miniature Circuit Breaker (QOU) Standard, 15A, 1 Pole, 120/240 VAC, HACR Rated	Square D, QOU115
57	2	Mini-CAS 102V relays for pump thermal/seal fail protection	Flygt Mini-CAS 120, 14-407129
58	1	Phase monitoring relay 3 phase 180-500 volt	Macromatic PMPU
59	2	480V Three phases S-811+ EATON Sofstarter with DIM. Including Protective Module EMS39 and Fan Cooling kit	Eaton S811+ series (To be sized)
60	2	Current transformers 10A to 50A, 4-20mA, 24VDC	Eaton EAC1420SC
61	2	3P 600VAC PowerPact H-Frame Molded Case Thermal-magnetic Circuit Breakers, Unit mount.	Square D (To be sized)
62	2	3P 600VAC PowerPact H-Frame Molded Case Thermal-magnetic Circuit Breakers, Unit mount.	Square D (To be sized)
63	2	Power Supply, Output 24-28V DC, 10A Input Voltage 100/240V AC	EATON, PSG240E
64	1	600VAC Power Distribution Blocks, Surface Mount, 3 Poles, 2 Line Terminals, 6 load Terminals	Square D 9080LB Series
65	1	600VAC Power Distribution Blocks, Surface Mount, 1 Pole, 2 Line Terminals, 6 load Terminals	Square D 9080LB Series
66	1	3-Pole Fuse Holder, AC: 600VAC, Finger-Safe Design, DIN Rail mounting	EATON BUSSMANN CHM3DNU or simmilar
67	3	1A Fast Acting Midget Fuse with 600VAC Voltage Rating for protection of control and electronic circuits	LITTELFUSE 0BLS001.T or simmilar
68	1	Air compressor for use with bubbler type liquid level control systems w/ Mounting Bracket Range of 0-15 feet of water column	Ingram Products Part No. HR10WB3 + Part No. HRMTBKT
69	1	General Purpose Pressure Transmitter, 4 - 20mA 2-Wire Signal Output, Stainless Steel 316L Wetted Parts, 0-15 psi Range, +/-0.5% Accuracy, 1/4" Male NPT Connectio	WIKA 50426397
70	2	24VDC Standard DPDT Screw Connection Terminal Block Relays	Eaton XRU2D24 + XRR2D24
71	1	Enclosure Inner Door Alum (Brushed)	Dead Front
72	1	Light STROBE	Federal Signal LP1-120R
73	1	Receptacle Assembly with AJ Back Boxes and Angle Adapters 200A 3Phases 4 Poles	Crouse-Hinds
74	1	316 Stainless Steel White Sunshields, Top, Back, Front and Sides	TBD
75	1	316 Stainless Steel Drip Shield, Top	TBD
76	1	Air to Air Heat Exchanger	TBD

COMMUNICATIONS

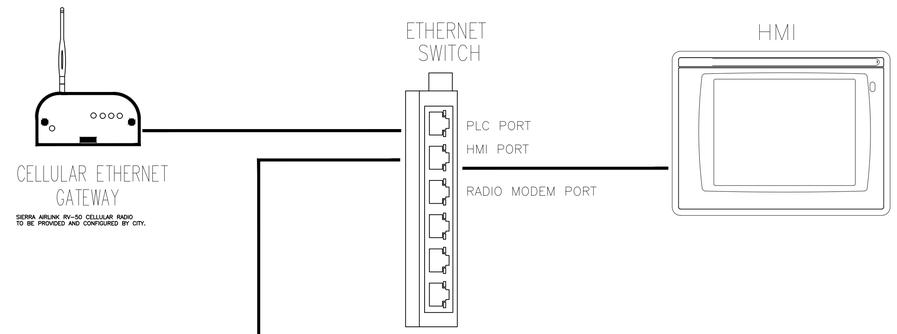

PLC WITH I/O CARDS

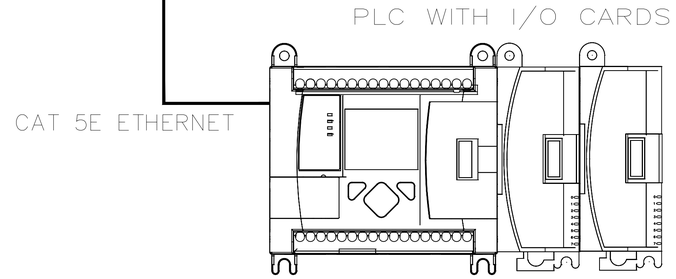

ELECTRIC & PROCESS SYMBOLS

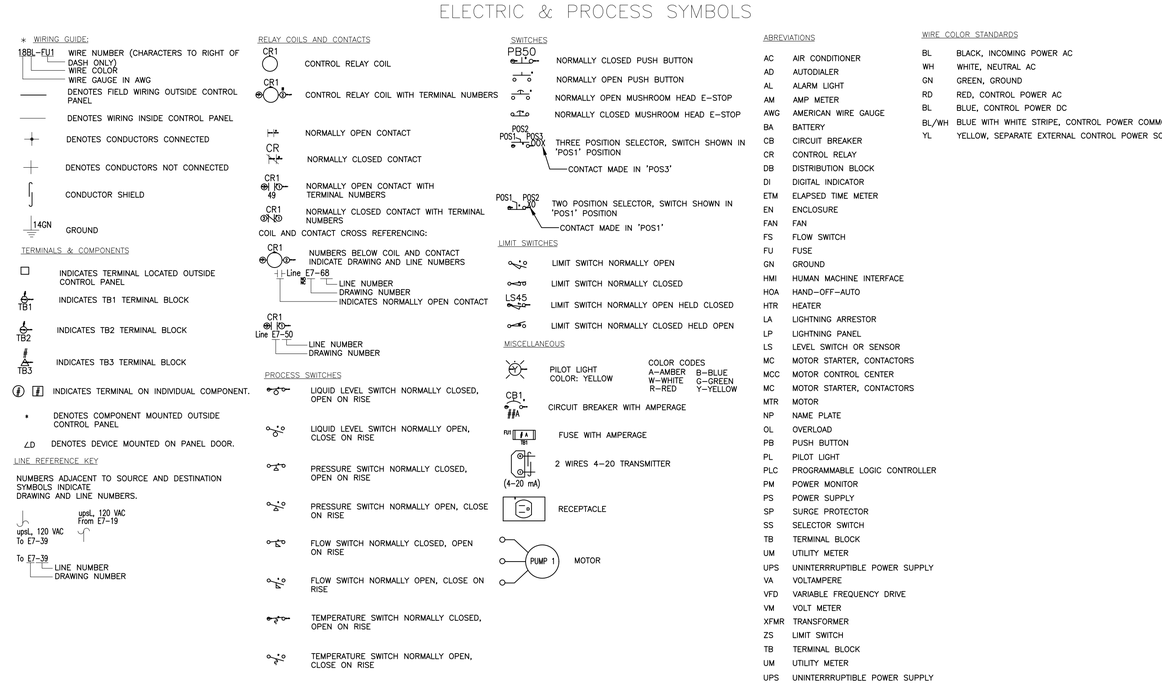

Hazen

HAZEN AND SAWYER
4000 HOLLYWOOD BLVD, SUITE 750N
HOLLYWOOD, FLORIDA 33021

Certificate of Authorization No: 2771

THOMPSON & ASSOCIATES
CERTIFICATE OF AUTHORIZATION 28185
PO BOX 22398, FORT LAUDERDALE, FLORIDA 33335
MIAMI-DADE (786) 897.5919
BROWARD (954) 761.1073
PALM BEACH (561) 932.1668

ENGINEER: NOEL RODRIGUEZ, P.E.
REG. No: 48480
DATE: 5/21/2019
TEL: 954-761-1073
FAX: 954-987-2949

DRAWN BY: SPH	DATE: 11/27/2018
DESIGNED BY: SPH	SCALE: N/A
CHECKED BY: LMS	
FIELD BOOK: XXXX	

CITY OF FORT LAUDERDALE
PUBLIC WORKS DEPARTMENT
ENGINEERING & ARCHITECTURE
100 North Andrews Avenue, Fort Lauderdale, Florida 33301

REVISIONS

NO.	DATE	BY	CHK'D	DESCRIPTION

BID SET, NOT FOR CONSTRUCTION

PROJECT # 12390
SEWER DESIGN AND IMPLEMENTATION PROGRAM
PUMP STATION D-38
CONT. PANEL BILL OF MATERIALS

SHEET NO. E-12 OF 25

TOTAL: 25

CAD FILE: 43194-E12-DETL

DRAWING FILE NO. 4-XXXX-XXXX

CITY OF FORT LAUDERDALE
PUBLIC WORKS DEPARTMENT

MINORITY BUSINESS ENTERPRISE (MBE) - WOMEN BUSINESS ENTERPRISE (WBE)

PRIME CONTRACTOR IDENTIFICATION FORM

In order to assist us in identifying the status of those companies doing business with the City of Fort Lauderdale, this form must be completed and returned with your bid package.

Name of Firm:

Address of Firm:

Telephone Number:

Name of Person Completing Form:

Title:

Signature:

Date:

City Project Number:

City Project Description:

Please check the item(s) which properly identify the status of your firm:

☐ Our firm is not a MBE or WBE.

☐ Our firm is a MBE, as at least 51 percent is owned and operated by one or more socially and economically disadvantaged individuals.

☐ American Indian ☐ Asian ☐ Black ☐ Hispanic

☐ Our firm is a WBE, as at least 51 percent is owned and operated by one or more women.

☐ American Indian ☐ Asian ☐ Black ☐ Hispanic

MBE/WBE CONTRACTOR INFORMATION

The City, in a continuing effort, is encouraging the increased participation of minority and women-owned businesses in Public Works Department related contracts. Along those lines, we are requiring that each firm provide documentation detailing their own programs for utilizing minority and women-owned businesses.

Submit this information as a part of this bid package and refer to the checklist, to ensure that all areas of concern are covered. The low responsive bidder may be contacted to schedule a meeting to discuss these objectives. It is our intention to proceed as quickly as possible with this project, so your cooperation in this matter is appreciated.

CONTRACTOR CHECKLIST

☐ List Previous City of Fort Lauderdale Contracts

☐ Number of Employees in your firm

--Percent (%) Women

--Percent (%) Minorities

--Job Classifications of Women and Minorities

☐ Use of minority and/or women subcontractors on past projects.

☐ Nature of the work subcontracted to minority and/or women-owned firms.

☐ How are subcontractors notified of available opportunities with your firm?

☐ Anticipated amount to be subcontracted on this project.

☐ Anticipated amount to be subcontracted to minority and/or women-owned businesses on this project.

BID NO. 12305-493 / PROJECT NO. 12390 SPECIFIC REFERENCES FORM

The Contractor shall have at least five (5) years previous construction experience in constructing wastewater pump stations and related additions/modifications in the State of Florida. Bidder shall submit proof of construction experience for a minimum of three (3) projects of similar scope and scale (or larger) and shall, for each project listed, identify location; dates of construction; project name and overall scope; project cost; scope of work that was self-performed by contractor; and client's name, address, telephone number and e-mail address.

Contractor(s) are expected to provide information on each project by including these forms in their bid submittals. If these forms are not utilized, the Contractor(s) must provide identical information to the City for evaluation purposes.

Note: Do not include proposed team members or parent/subsidiary companies as references in your submittals.

A. PRIME BIDDER'S NAME: _____

CLIENT NO.1 - Name of firm to be contacted: _____

Address: _____

Contact Person: _____

Phone No: (___) _____

Contact E-Mail Address: _____

Project Performance Period: _____ to _____
Dates should be in mm/yy format

Project Name : _____

Location of Project: _____

Overall Construction Cost: _____

Description of the overall scope: _____

_____

_____

_____

_____

Description of work that was self-performed by Bidder:

_____

_____

_____

_____

_____

BID NO. 12305-493 / PROJECT NO. 12390 SPECIFIC REFERENCES FORM

CLIENT NO.2 - Name of firm to be contacted: _____

Address: _____

Contact Person: _____

Phone No: (___) _____

Contact E-Mail Address: _____

Project Performance Period: _____ to _____
Dates should be in mm/yy format

Project Name : _____

Location of Project: _____

Overall Construction Cost: _____

Description of the overall scope: _____

_____

_____

_____

_____

Description of work that was self-performed by Bidder:

_____

_____

_____

_____

_____

_____

BID NO. 12305-493 / PROJECT NO. 12390 SPECIFIC REFERENCES FORM

CLIENT NO.3 - Name of firm to be contacted: _____

Address: _____

Contact Person: _____

Phone No: (___) _____

Contact E-Mail Address: _____

Project Performance Period: _____ to _____
Dates should be in mm/yy format

Project Name : _____

Location of Project: _____

Overall Construction Cost: _____

Description of the overall scope: _____

_____

_____

_____

_____

Description of work that was self-performed by Bidder:

_____

_____

_____

_____

_____

_____

LOCAL BUSINESS PREFERENCE

Section 2-199.2, Code of Ordinances of the City of Fort Lauderdale, (Ordinance No. C-12-04), provides for a local business preference.

In order to be considered for a local business preference, a bidder must include the Local Business Preference Certification Statement of this bid/proposal, as applicable to the local business preference class claimed **at the time of bid submittal.**

Upon formal request of the City, based on the application of a Local Business Preference the Bidder shall, within ten (10) calendar days, submit the following documentation to the Local Business Preference Class claimed:

A) Copy of City of Fort Lauderdale current year business tax receipt, **or** Broward County current year business tax receipt, **and**

B) List of the names of all employees of the bidder and evidence of employees' residence within the geographic bounds of the City of Fort Lauderdale or Broward County, as the case may be, such as current Florida driver license, residential utility bill (water, electric, telephone, cable television), or other type of similar documentation acceptable to the City.

Failure to comply at time of bid submittal shall result in the bidder being found ineligible for the local business preference.

THE COMPLETE LOCAL BUSINESS PREFERENCE ORDINANCE MAY BE FOUND ON THE CITY'S WEB SITE AT THE FOLLOWING LINK:
https://library.municode.com/fl/fort_lauderdale/codes/code_of_ordinances?nodeId=COOR_CH2AD_ARTVFI_DIV2PR_S2-186LOBUPRPR

Definitions: The term "Business" shall mean a person, firm, corporation or other business entity which is duly licensed and authorized to engage in a particular work in the State of Florida. Business shall be broken down into four (4) types of classes:

1. Class A Business – shall mean any Business that has established and agrees to maintain a permanent place of business located in a non-residential zone and staffed with full-time employees within the limits of the City **and** shall maintain a staffing level of the prime contractor for the proposed work of at least fifty percent (50%) who are residents of the City.
2. Class B Business - shall mean any Business that has established and agrees to maintain a permanent place of business located in a non-residential zone and staffed with full-time employees within the limits of the City **or** shall maintain a staffing level of the prime contractor for the proposed work of at least fifty percent (50%) who are residents of the City.
3. Class C Business - shall mean any Business that has established and agrees to maintain a permanent place of business located in a non-residential zone **and** staffed with full-time employees within the limits of Broward County.
4. Class D Business – shall mean any Business that does not qualify as either a Class A, Class B, or Class C business.

LOCAL BUSINESS PREFERENCE CERTIFICATION STATEMENT

The Business identified below certifies that it qualifies for the local business preference classification as indicated herein, and further certifies and agrees that it will re-affirm its local preference classification annually no later than thirty (30) calendar days prior to the anniversary of the date of a contract awarded pursuant to this ITB. Violation of the foregoing provision may result in contract termination.

(1) _____
Business Name

(2) _____
Business Name

(3) _____
Business Name

(4) _____
Business Name

(5) _____
Business Name

(6) _____
Business Name

is a **Class A** Business as defined in City of Fort Lauderdale Ordinance No. C-17-26, Sec.2-186. A copy of the City of Fort Lauderdale current year Business Tax Receipt **and** a complete list of full-time employees and evidence of their addresses shall be provided within 10 calendar days of a formal request by the City.

is a **Class B** Business as defined in the City of Fort Lauderdale Ordinance No. C-17-26, Sec.2-186. A copy of the Business Tax Receipt **or** a complete list of full-time employees and evidence of their addresses shall be provided within 10 calendar days of a formal request by the City.

is a **Class C** Business as defined in the City of Fort Lauderdale Ordinance No. C-17-26, Sec.2-186. A copy of the Broward County Business Tax Receipt shall be provided within 10 calendar days of a formal request by the City.

requests a **Conditional Class A** classification as defined in the City of Fort Lauderdale Ordinance No. C-17-26, Sec.2-186. Written certification of intent shall be provided within 10 calendar days of a formal request by the City.

requests a **Conditional Class B** classification as defined in the City of Fort Lauderdale Ordinance No. C-17-26, Sec.2-186. Written certification of intent shall be provided within 10 calendar days of a formal request by the City.

is considered a **Class D** Business as defined in the City of Fort Lauderdale Ordinance No. C-17-26, Sec.2-186 and does not qualify for Local Preference consideration.

BIDDER'S COMPANY: _____

AUTHORIZED COMPANY PERSON: _____ _____

PRINTED NAME TITLE

SIGNATURE: _____ DATE: _____

TRENCH SAFETY

Bidder acknowledges that included in the appropriate bid items of his bid and in the Total Bid Price are costs for complying with the Florida Trench Safety Act, Florida Statutes 553.60 – 553.64. The bidder further identifies the costs of such compliance to be summarized below:

Trench Safety Measure (Description)	Units of Measure (LF/SF)	Unit (Quantity)	Unit Cost	Extended Cost
A.			$	$
B.			$	$
C.			$	$
D.			$	$

Total: $

The bidder certifies that all trench excavation done within his control in excess of five feet (5') in depth shall be in accordance with the Occupational Safety and Health Administration's excavation safety standards, C.F.R. s. 1926.650 Subpart P., and the Florida Trench Safety Act, Florida Statutes 553.60-553.64.

Failure to complete the above may result in the bid being declared non-responsive.

DATE:

(SIGNATURE)

STATE OF: COUNTY OF:

PERSONALLY APPEARED BEFORE ME, the undersigned authority,

(Name of Individual Signing)

who, after first being duly sworn by me,
affixed his/her signature in the space provided above on this
day of , 20 .

NOTARY PUBLIC

My Commission Expires:

NON-COLLUSION STATEMENT:

By signing this offer, the vendor/contractor certifies that this offer is made independently and free from collusion. Vendor shall disclose below any City of Fort Lauderdale, FL officer or employee, or any relative of any such officer or employee who is an officer or director of, or has a material interest in, the vendor's business, who is in a position to influence this procurement.

Any City of Fort Lauderdale, FL officer or employee who has any input into the writing of specifications or requirements, solicitation of offers, decision to award, evaluation of offers, or any other activity pertinent to this procurement is presumed, for purposes hereof, to be in a position to influence this procurement.

For purposes hereof, a person has a material interest if they directly or indirectly own more than 5 percent of the total assets or capital stock of any business entity, or if they otherwise stand to personally gain if the contract is awarded to this vendor.

In accordance with City of Fort Lauderdale, FL Policy and Standards Manual, 6.10.8.3,

3.3. City employees may not contract with the City through any corporation or business entity in which they or their immediate family members hold a controlling financial interest (e.g. ownership of five (5) percent or more).

3.4. Immediate family members (spouse, parents and children) are also prohibited from contracting with the City subject to the same general rules.

Failure of a vendor to disclose any relationship described herein shall be reason for debarment in accordance with the provisions of the City Procurement Code.

NAME	RELATIONSHIPS

In the event the vendor does not indicate any names, the City shall interpret this to mean that the vendor has indicated that no such relationships exist.

QUESTIONNAIRE SHEET

PLEASE PRINT OR TYPE:

Firm Name:

President

Business Address:

Telephone:

Fax:

E-Mail Address:

What was the last project of this nature which you completed? Include the year, description, and contract value.

The following are named as three corporations and representatives of those corporations for which you have performed work similar to that required by this contract, and which the City may contact as your references (include addresses, telephone numbers and e-mail addresses). Include the project name, year, description, and contract value.

How many years has your organization been in business?

Have you ever failed to complete work awarded to you; if so, where and why?

The name of the qualifying agent for the firm and his position is:

Certificate of Competency Number of Qualifying Agent:

Effective Date: Expiration Date:

Licensed in: Engineering Contractor's License #

(County/State)

Expiration Date:

NOTE: To be considered for award of this contract, the bidder must submit a financial statement upon request.

NOTE: Contractor must have proper licensing and shall provide copy of same with his proposal.

QUESTIONNAIRE SHEET

1. Have you personally inspected the proposed work and have you a complete plan for its performance?

2. Will you sublet any part of this work? If so, list the portions or specialties of the work that you will.

a)

b)

c)

d)

e)

f)

g)

3. What equipment do you own that is available for the work?

4. What equipment will you purchase for the proposed work?

5. What equipment will you rent for the proposed work?

CONTRACT PAYMENT METHOD

The City of Fort Lauderdale has implemented a Procurement Card (P-Card) program which changes how payments are remitted to its vendors. The City has transitioned from traditional paper checks to credit card payments via MasterCard or Visa as part of this program.

This allows you as a vendor of the City of Fort Lauderdale to receive your payments fast and safely. No more waiting for checks to be printed and mailed.

In accordance with the contract, payments on this contract will be made utilizing the City's P Card (MasterCard or Visa). Accordingly, bidders must presently have the ability to accept these credit cards or take whatever steps necessary to implement acceptance of a card before the start of the contract term, or contract award by the City.

All costs associated with the Contractor's participation in this purchasing program shall be borne by the Contractor. The City reserves the right to revise this program as necessary.

By signing below you agree with these terms.

Please indicate which credit card payment you prefer:

☐ MasterCard

☐ Visa

Company Name

Name (Printed)

Signature

Date

Title

CONTRACTOR'S CERTIFICATE OF COMPLIANCE WITH NON-DISCRIMINATION PROVISIONS OF THE CONTRACT

The completed and signed form should be returned with the Contractor's submittal. If not provided with submittal, the Contractor must submit within three business days of City's request. Contractor may be deemed non-responsive for failure to fully comply within stated timeframes.

Pursuant to City Ordinance Sec. 2-187(c), bidders must certify compliance with the Non-Discrimination provision of the ordinance.

The Contractor shall not, in any of his/her/its activities, including employment, discriminate against any individual on the basis of race, color, national origin, religion, creed, sex, disability, sexual orientation, gender, gender identity, gender expression, or marital status.

1. The Contractor certifies and represents that he/she/it will comply with Section 2-187, Code of Ordinances of the City of Fort Lauderdale, Florida, as amended by Ordinance C-18-33 (collectively, "Section 2-187").

2. The failure of the Contractor to comply with Section 2-187 shall be deemed to be a material breach of this Agreement, entitling the City to pursue any remedy stated below or any remedy provided under applicable law.

3. The City may terminate this Agreement if the Contractor fails to comply with Section 2-187.

4. The City may retain all monies due or to become due until the Contractor complies with Section 2-187.

5. The Contractor may be subject to debarment or suspension proceedings. Such proceedings will be consistent with the procedures in section 2-183 of the Code of Ordinances of the City of Fort Lauderdale, Florida.

Authorized Signature

Print Name and Title

Date

FINANCE DEPARTMENT
PRE-BID MEETING SIGN-IN SHEET

WE BUILD COMMUNITY

DATE: 07/29/2019 **TIME:** 10:30 ◉ AM ○ PM

OPENING DATE: 08/19/2019 **PROCUREMENT CONTACT:** Penelope Burger

ITB #: 12305-493 **ITB TITLE:** Replacement of Pump Station D-38

NAME	COMPANY	PHONE	EMAIL
Jennifer McMahon	Hazen	9549870066	
Trish Carney	Hazen	954 9870066	
Noel Rodriguez	Thompson + Associates	9546753327	noel@thompson-inc.com
JOSE ESCUDERO	BLDM USA, LLC.	7875491290	jescudero@bldmpr.com
Penelope Burger	City Fort Lauderdale	954-828-5189	pburger@fortlauderdale.gov
Eduardo Garcia	RMI	954-684-0545	eduardog@ric-man.us
Stephanie Wilk	City of Fort Lauderdale	954-828-5772	swilk@fortlauderdale.gov

FINANCE DEPARTMENT

PRE-BID MEETING SIGN-IN SHEET

WE BUILD COMMUNITY

DATE: 07/29/2019 **TIME:** 10:30 (•) AM ( ) PM

OPENING DATE: 08/19/2019 **PROCUREMENT CONTACT:** Penelope Burger

ITB #: 12305-493 **ITB TITLE:** Replacement of Pump Station D-38

NAME	COMPANY	PHONE	EMAIL
Chris Lazzari	DMSI	954-895-0741	clazzari@dmsi.co
Shelley McDougle	Intercounty Engineering	954-972-9800	smcdougle@intercountyengineering.com
Zach Groner	xylem/Goulds Pumps Bypass	305-906-2811	zachary.groner@xyleminc.com
Carlos Rocha	Southland Painting Corp	954-326-3055	Carlox@southlandpainting.com
Jessic Foster	" " "	954-854-3138	Jessica@southlandpainting.com
ROHAN PUNIT	CITY OF FORT LAUDERDALE	954-828-5859	RPunit@fortlauderdale.gov

FINANCE DEPARTMENT

PRE-BID MEETING SIGN-IN SHEET

WE BUILD COMMUNITY

DATE: 07/29/2019 **TIME:** 10:30 ◉ AM ○ PM

OPENING DATE: 08/19/2019 **PROCUREMENT CONTACT:** Penelope Burger

ITB #: 12305-493 **ITB TITLE:** Replacement of Pump Station D-38

NAME	COMPANY	PHONE	EMAIL
MIKE BENTKJAER	SHERWIN-WILLIAMS	239-896-6738	MIKE.BENTKJAER@SHERWIN.COM
Jimmy Hidalgo	Barney's Pumps Inc	954-346-0669	hidalgoj@barneyspumps.com
Brandy Leighton	City of Fort Lauderdale	954-828-5326	bleighton@fortlauderdale.gov
Raymond Rammo	City of Fort Lauderdale	954.828.5990	rrammo@fortlauderdale.gov

City of Fort Lauderdale • Procurement Services Division
100 N. Andrews Avenue, 619 • Fort Lauderdale, Florida 33301
954-828-5933 Fax 954-828-5576
purchase@fortlauderdale.gov

RFP 12305-493
PROJECT No. 12390
REPLACEMENT OF PUMP STATION D-38

ADDENDUM NUMBER 1
AUGUST 05, 2019

The following Addendum is hereby made a part of the Plans and Specifications and shall be included with all contract documents:

Acknowledge receipt of this Addendum by inserting its number and date on the Construction Bid Certification. **All changes are in bold, red italics.**

DRAWINGS AND SPECIFICATIONS

1. *Specification Section 09900, Protective Coatings, Paragraph 3.06 F*

   DELETE the sentence "See Section 02770 Sanitary Sewer Lining" and ***REPLACE*** with "Refer to Sheet C-9 of the Plans, Painting & Coatings Notes".

2. ***DELETE*** and ***REPLACE*** the following specifications**:**

   - ***DELETE*** Specification Section 01012 issued with the bid documents and ***REPLACE*** with the attached Specification Section 01012.

3. ***DELETE*** and ***REPLACE*** the following drawings**:**

   - ***DELETE*** Drawing C-2 issued with the bid documents and ***REPLACE*** with the drawing issued with this Addendum.
   - ***DELETE*** Drawing C-3 issued with the bid documents and ***REPLACE*** with the drawing issued with this Addendum.
   - ***DELETE*** Drawing C-4 issued with the bid documents and ***REPLACE*** with the drawing issued with this Addendum.

City of Fort Lauderdale • Procurement Services Division
100 N. Andrews Avenue, 619 • Fort Lauderdale, Florida 33301
954-828-5933 Fax 954-828-5576
purchase@fortlauderdale.gov

- ***DELETE*** Drawing C-5 issued with the bid documents and ***REPLACE*** with the drawing issued with this Addendum.
- ***DELETE*** Drawing C-9 issued with the bid documents and ***REPLACE*** with the drawing issued with this Addendum.
- ***DELETE*** Drawing E-2 issued with the bid documents and ***REPLACE*** with the drawing issued with this Addendum.

4. ***DELETE*** 5th paragraph on Page ITB-2, *Licensing Requirements*, and ***REPLACE*** with " Licensing Requirements:- Possession of a certified general contractor license issued by the Florida Department of Business and Professional Regulation."

All other terms, conditions, and specifications remain unchanged.

Penelope Burger
Procurement Administrator

Company Name: _____
(please print)

Bidder's Signature: _____

Date: _____

City of Fort Lauderdale

SECTION 01012 MEASUREMENT AND PAYMENT

PART 1 - GENERAL

1.01 DESCRIPTION

A. Payment for various items of the Bid Schedule, as further specified herein, shall include all compensation to be received by the CONTRACTOR for furnishing all tools, equipment, supplies, and manufactured articles, and for all labor operations and incidentals appurtenant to the items of WORK being described, as necessary to complete the various items of the WORK all in accordance with requirements of the Contract Documents, including all appurtenances thereto, and including all costs of permits and cost of compliance with the regulations of public agencies having jurisdiction, including Safety and Health Requirements of the Occupational Safety and Health Administration of the U.S. Department of Labor (OSHA). No separate payment will be made for any item that is not specifically set forth in the Bid Schedule, and all costs therefore shall be included in the prices named in the Bid Schedule for the various appurtenance items of WORK.

B. Payment for the various items of the Bid Schedule shall constitute full compensation for CONTRACTOR's superintendent at the job site full-time during construction, for furnishing and installing all pipe and structures complete in place including but not limited to rehabilitation of existing wetwell and valve vault, electrical control panels, by-pass pumping, bends, tees, outlets, fittings, blind flanges and specials, including connections to existing pipelines and wetwell shown on the DRAWINGS; including surveying both horizontal and vertical control for construction of the roadways, structures, pipeline and appurtenances; including all earthwork, excavation as shown on the DRAWINGS, removal and disposal of waste, unsuitable and excess material, furnishing and installing pipe bedding material, all backfill and compaction of native material, and dewatering as required; including potholing to verify locations of existing utilities in advance of construction; the restoration of interfering portions of the area adjacent to the existing pump station, existing service and utility lines that are not included in other bid items and shown on the DRAWINGS, including replacement of sewer lines with ductile iron pipe where the minimum vertical clearances are not met for the sewer line shown; restraint of pipe shown on the DRAWINGS and grouting of pipe joints; including providing the water for pressure testing, cleaning the pipe and disinfection, and disposal of the water as required when completed; furnishing, installation, and removal of test heads, cleanup; and restoration of all improvements incidental to construction for which there are no other bid items; including but not limited to, sprinkler systems, drainage systems, guardrails, landscaping, fences, curbs and gutters, and all other WORK not included in other bid items.

C. Payment shall also include providing the necessary equipment and labor to pothole and verify depths and locations of existing utilities sufficiently ahead of construction to avoid conflicts with the design alignment and grade of the transmission pipeline. Conflicts with utilities shown on the DRAWINGS which result from the CONTRACTOR's negligence to pothole sufficiently ahead of construction (a minimum of two days ahead of construction of the pipeline or as approved by the ENGINEER) shall be resolved by the CONTRACTOR at no additional cost to the CITY. Unmarked utilities damaged during construction will be paid under unit prices in the Bid Schedule for similar WORK, if and as approved by the ENGINEER.

D. Payment for all bid items shall constitute full compensation for the complete installation of each bid item including but not limited to excavation, dewatering, backfill and compaction.

The WORK shall include for all bid items to be completed, tested and ready for acceptance by the appropriate government agency.

1.02 PAYMENT REQUESTS

A. The format for Payment Requests shall be as directed by the ENGINEER. This shall include the level of breakdown and grouping of payment items.

B. The quantities for payment under this Contract shall be full compensation determined by actual measurement of the completed items, in place, ready for service and accepted by the CITY unless otherwise specified. The ENGINEER shall witness all field measurements.

1.03 MOBILIZATION AND DEMOBILIZATION – BID ITEM NO. 1

A. The lump sum price bid for this item shall be full compensation for all mobilization and demobilization activities, including but not limited to scheduling, labor associated with permit acquisition, temporary facilities, audio-visual documentation of existing site, preparation and submittal of shop drawings, all other activities necessary to prepare to complete the contract WORK, demobilization and site cleanup. The payment for mobilization and demobilization shall not exceed 5% of the contract price.

B. Payment for mobilization will be made at the lump sum price named in the Bid Schedule. An initial lump sum partial payment of 40% of the Mobilization Pay Item shall be made upon completion of the items # 1 through 9 as outlined in Section 01550 paragraph 1.01. GENERAL, B. Payment of the remaining 60% for mobilization will be made in equal monthly amounts during the duration of the original contractual contract time and includes demobilization.

1.04 MAINTENANCE OF TRAFFIC – BID ITEM NO. 2

A. See Section 01570 "Traffic Regulations", Section 01110 "Summary of Work", and all other references to traffic control in this document and any regulatory requirements.

B. Payment for maintenance of traffic will be made at the lump sum price named in the Bid Schedule. Payment for maintenance of traffic will be made in equal monthly amounts during the duration of the contract time. Existing traffic signage shall be maintained and protected at all times. There shall be no additional payment for the replacement of existing traffic signage damaged during the execution of the project.

C. CONTRACTOR is hereby forewarned that CITY may not allow lane closures during peak hour or other times and may permit only one lane to be closed at any time, if at all. CONTRACTOR shall provide temporary traffic signals and/or portable changeable message signs in accordance with FDOT Standard Index 606, 24 hours per day, 7 days per week-including the appropriate staff to operate the traffic signals. Additional requirements may exist depending on the right-of-way owner. It is the responsibility of the CONTRACTOR to determine, prior to bidding, all MOT requirements of all agencies having jurisdiction and incorporate all such requirements into their prices bid, schedule and means and methods.

D. Payment for Maintenance of Traffic shall include full compensation for furnishing and installing all temporary road, pedestrian facilities, all required traffic control devices, signs including portable changeable message signs, portable temporary signals, associated required accessories and staff, and law enforcement officers as required to maintain vehicular and pedestrian traffic, and all else necessary for a complete and functional Maintenance of Traffic operation, as required by the authority having jurisdiction, are to be included under this item. Maintenance of Traffic shall also include all costs associated with preventing the use of any metered parking spaces by the general public as a result of the

CONTRACTOR's Maintenance of Traffic Plan or construction activities. The CONTRACTOR is notified that the cost for each parking space is $25 per day and shall be paid to the Transportation and Mobility Department at the City of Fort Lauderdale. Demolition, removal and disposal of all temporary road and pedestrian facilities are also included in this line item.

1.05 BY-PASS PUMPING AT PUMP STATION D-38 – BID ITEM NO.3

A. Payment for By-pass pumping will be made at the lump sum price named in the Bid Schedule. Payment for By-pass pumping will be made in equal monthly amounts during the duration of the contract time.

B. Such amount represents the amount the CONTRACTOR determines is necessary to install, operate, maintain, and remove a by-pass pumping system staffed twenty-four (24) hours per day, seven (7) days per week, which includes the installation of a temporary gravity sewer plug, providing a stand-by pump, with sufficient capacity to pump into existing sanitary system, and a stand-by generator, with sufficient capacity to power the by-pass system, both on-site during the time the by-pass is active and required during the process of upgrading the pump station. This item includes two 48-hour performance test periods, to ensure that the by-pass system as installed is satisfactory to the ENGINEER and the CITY. The CONTRACTOR shall conduct the performance test prior to starting any demolition work. Once the pump station upgrades have been completed, the by-pass system must remain onsite and available for use for a total of 7 days after the pump station start up to ensure that pump station performance is satisfactory to the ENGINEER and the CITY. Payment for this item shall include demobilization and removal of the by-pass pump system and all necessary repairs to return the site to a condition that existed prior to the by-pass pump system installation.

C. Should the CONTRACTOR fail to obtain temporary electric service in a timely manner to power the by-pass pump system, the CONTRACTOR shall be required to provide a diesel-powered redundant by-pass pump system at no additional cost to the CITY. A timely manner is considered equal to the period of time that will not impact the project's critical path schedule.

1.06 DEMOLITION WORK AT PUMP STATION D-38– BID ITEM NO.4

A. Measurement and payment for demolition work at pump station D-38 shall be made at the lump sum price named in the Bid Schedule, all in accordance with the requirements of the Contract Documents.

B. Payment for demolition work at pump station D-38 shall include full compensation for furnishing all labor, materials and equipment for the complete demolition, removal and disposal of items including but not limited to: cutting and plugging of existing sanitary sewer force main, existing pump station top slabs and hatches, existing pump station pumps, piping, fittings and appurtenances, pump station electrical and control panels, pull boxes, curb and gutter, concrete sidewalls and trees all in accordance with the Contract Documents.

1.07 REHABILITATION OF PUMP STATION D-38 – BID ITEM NO. 5

A. Measurement and payment for rehabilitation of pump station D-38 will be made at the lump sum price named in the Bid Schedule, all in accordance with the requirements of the contract documents

B. Payment for rehabilitation of pump station D-38 shall include full compensation for furnishing all labor, materials and equipment for the complete installation, testing, start up

and operation of items including but not limited to: installation of grade rings for wetwell and valve vault, installation of new top slab and hatches for wetwell and valve vault, rehabilitation of wetwell and valve vault structures, internal coatings of structures, dewatering, installation of pumps, all piping, valves, fittings, couplings, pipe supports and appurtenances within the wetwell and valve vault, construction of concrete pad, installation of vent pipe, odor control unit and all other appurtenances all in accordance with the Contract Documents. This item includes all WORK not defined in other bid items.

C. If the CONTRACTOR deems it necessary to dewater, the CONTRACTOR is required to obtain a dewatering permit from Broward County Pollution Prevention, Remediation and Air Quality Division and adhere to any required groundwater well monitoring, sampling, cofferdams, or any other applicable permit conditions. This is in addition to a dewatering permit, if required, by South Florida Water Management District (SFWMD).

1.08 FURNISH AND INSTALL FORCE MAIN, 6", 8" & 10" PVC C-900 – BID ITEM NO. 6

A. Measurement and payment for furnishing and installing force main, 6", 8" & 10" PVC C-900 shall be made at the lump sum price named in the Bid Schedule, all in accordance with the requirements of the Contract Documents.

B. Payment for furnishing and installing force main, 6", 8" & 10" PVC C-900 shall include full compensation for furnishing all labor, materials and equipment for the installation of force main. Installation shall include: layout, fittings, restraints, excavation, trench preparation, thrust blocks, dewatering, backfilling, compaction, subgrade, base rock, tack coats, asphalt paving, disposal of waste and excess material, connections to existing force main, connection to pump station D-38 piping, hydrostatic pressure testing, electronic markers (metal tape or wire), survey, producing record drawings in accordance with the Contract Documents, clean-up, necessary adjustments to existing utilities, and all other appurtenant work.

C. If the CONTRACTOR deems it necessary to dewater, the CONTRACTOR is required to obtain a dewatering permit from Broward County Pollution Prevention, Remediation and Air Quality Division and adhere to any required groundwater well monitoring, sampling, cofferdams, or any other applicable permit conditions. This is in addition to a dewatering permit, if required, by SFWMD.

D. The cost of labor, equipment, and material to de-muck or remove and properly dispose of any unsuitable soil organics as detailed in the Geotechnical Report shall be included in the Lump Sum Price.

1.09 FURNISH AND INSTALL SEWER 6" PLUG VALVES – BID ITEM NO. 7

A. Measurement for payment for furnishing and installing 6" plug valves shall be based upon the actually quantity, per each, installed all in accordance with the Contract Documents.

B. Payment for furnishing and installing plug valves will be made at the contract unit prices per each named in the Bid Schedule. Unit price shall constitute full payment for furnishing all labor, materials and equipment for the installation of plug valves, complete. Installation shall include layout, excavation, trench preparation, polyethylene encasement, zinc coating, thrust blocks, dewatering, backfilling, compaction, disposal of waste and excess material, hydrostatic pressure testing, electronic markers, clean-up and all other appurtenant work.

1.10 FURNISH AND INSTALL SEWER 8" PLUG VALVES – BID ITEM NO. 8

A. Measurement for payment for furnishing and installing 8" plug valves will be based upon the actually quantity, per each, installed all in accordance with the Contract Documents.

B. Payment for furnishing and installing plug valves will be made at the contract unit prices per each named in the Bid Schedule. Unit price shall constitute full payment for furnishing all labor, materials and equipment for the installation of plug valves, complete. Installation shall include layout, excavation, trench preparation, polyethylene encasement, zinc coating, thrust blocks, dewatering, backfilling, compaction, disposal of waste and excess material, hydrostatic pressure testing, electronic markers, clean-up and all other appurtenant work.

1.11 FURNISH AND INSTALL SEWER 10" PLUG VALVES – BID ITEM NO. 9

A. Measurement for payment for furnishing and installing 10" plug valves will be based upon the actually quantity, per each, installed all in accordance with the Contract Documents.

B. Payment for furnishing and installing plug valves will be made at the contract unit prices per each named in the Bid Schedule. Unit price shall constitute full payment for furnishing all labor, materials and equipment for the installation of plug valves, complete. Installation shall include layout, excavation, trench preparation, polyethylene encasement, zinc coating, thrust blocks, dewatering, backfilling, compaction, disposal of waste and excess material, hydrostatic pressure testing, electronic markers, clean-up and all other appurtenant work.

1.12 FURNISH AND INSTALL PUMP STATION D-38 ELECTRICAL SERVICE AND CONTROL PANEL – BID ITEM NO. 10

A. Measurement and payment for furnishing and installing pump station D-38 electrical service and control panel shall be made at the lump sum price named in the Bid Schedule, all in accordance with the requirements of the Contract Documents.

B. Payment for furnishing and installing pump station D-38 electrical service and control panels shall include full compensation for furnishing all labor, material and equipment for complete installation, testing and operation of items including but not limited to: new electrical service conduit and wiring, new pump station control panel, pull boxes, wiring and all appurtenances all in accordance with the Contract Documents .

1.13 MILLING AND RESURFACING OF ASPHALT PAVEMENT– BID ITEM NO. 11

A. Measurement for payment for milling and resurfacing of asphalt pavement shall be based upon the number of square yards of such asphalt pavement actually milled and resurfaced, as detailed in the Drawings, all in accordance with the requirements of the Contract Documents.

B. Payment for milling and resurfacing of asphalt pavement to a minimum thickness of 1 inch shall be made at the unit price per square yard for such milling and resurfacing as named in the Bid Schedule. This price shall constitute full compensation for milling and disposal of existing asphalt, applying a tack coat and furnishing, placing and compacting superpave asphalt to the full cross section of existing roadway, including temporary pavement markings and messages, milling and saw cutting of all pavement and all cleanup of the area disturbed by this construction all per CITY specifications.

1.14 SITE RESTORATION – BID ITEM NO. 12

A. Measurement and payment for site restoration shall be made at the lump sum price named in the Bid Schedule, all in accordance with the requirements of the Contract Documents.

B. Payment for site restoration shall include full compensation for furnishing all labor, materials and equipment for the complete site restoration in accordance with the Contract Documents. The lump sum price shall constitute complete restoration of surface disturbed by construction including: sodding, concrete sidewalk, ADA ramps, crosswalks, brick

City of Fort Lauderdale

pavers, curb and gutter, rim and valve adjustments, reinforcement, temporary striping, removal of temporary striping, street sweeping, retro-reflective pavement markers, thermoplastic pavement markings, signage and bollards as required by the plans.

1.15 FURNISH AND INSTALL AIR RELEASE VALVE WITH MAINTENANCE ACCESS STRUCTURE – BID ITEM NO. 13

A. Measurement for payment to furnish and install air release valve with maintenance access structure shall be based upon the actual number, per each, of such air release valves with maintenance access structures installed all in accordance with the Contract Documents.

B. Payment for furnishing and installing air release valves with maintenance access structures shall be made at the unit price per each named in the Bid Schedule, which price shall constitute full compensation for the construction of air release valves with maintenance access structures, complete, including appurtenances.

C. Placement of air release valves shall be as ordered by ENGINEER after record drawings are submitted and reviewed.

1.16 PERMIT FEE ALLOWANCE

A. Payment for permit fees shall be based upon the actual permit fees required of the CONTRACTOR from the various agencies having jurisdiction for construction of the project, all in accordance with the Contract Documents. The allowance amount shown in the Bid Schedule is an estimate for the project and is a cost pass through item. The CONTRACTOR shall not add markup or overhead charges to these fees. All amounts remaining in this item upon competition of the project shall be credited to the CITY. Documentation verifying actual costs shall be submitted with the payment request.

1.17 FLORIDA POWER AND LIGHT (FP&L) FEES ALLOWANCE

A. Payment for Florida Power and Light (FP&L) fees shall be based upon the actual costs associated with obtaining electrical power from FP&L. The CONTRACTOR shall not add markup or overhead charges to these fees. The cost of the fee paid to FP&L shall be full compensation to the CONTRACTOR. All amounts remaining in this item upon completion of the project shall be credited to the CITY. Documentation verifying actual costs shall be submitted with the payment request.

1.18 LANDSCAPE AND IRRIGATION ALLOWANCE

A. The CONTRACTOR shall provide Landscape and Irrigation Plans, signed and sealed by a Florida Registered Landscape Architect, to the CITY for the improvements within the median where the sanitary sewer pump station is located. Landscape and Irrigation plans to be approved by the CITY. This item also includes payment for all labor, equipment and material required for executing approved Landscape and Irrigation plans. All amounts remaining in this item upon competition of the project shall be credited to the CITY. Only landscaping and irrigation modification costs substantiated by the CONTRACTOR and approved by the ENGINEER will be paid as part of this bid item.

PART 2 - PRODUCTS (NOT APPLICABLE)

PART 3 – EXECUTION (NOT APPLICABLE)

END OF SECTION

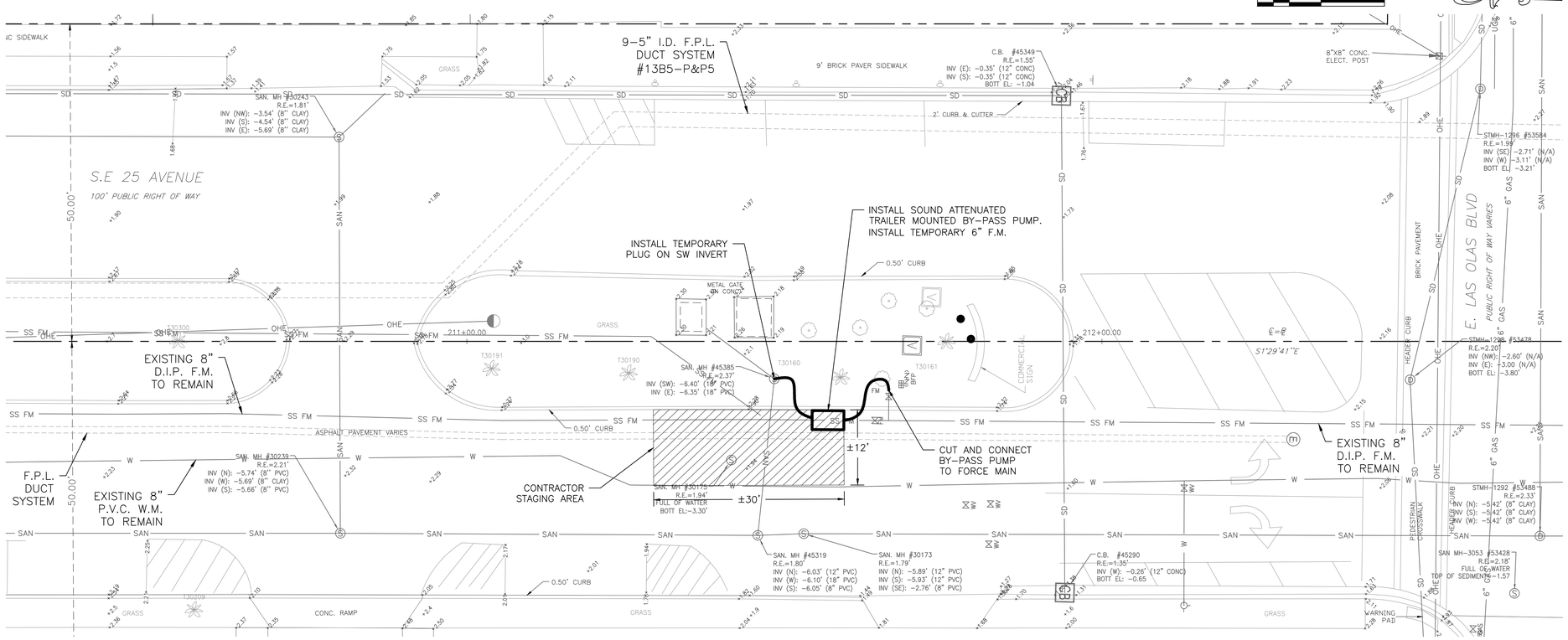

BY-PASS PUMPING PLAN

SCALE: 1"=10'

NOTES:

1. CONTRACTOR SHALL REPLACE SURROUNDING GROUND AFFECTED INCLUDING BUT NOT LIMITED TO PAVERS, CURB, SIDEWALK, SOD AND BRING IT TO EXISTING OR BETTER CONDITIONS.
2. EXISTING UTILITY DEPTHS ARE UNKNOWN UNLESS OTHERWISE INDICATED. LOCATIONS AND DEPTHS ARE ESTIMATES.
3. BY–PASS PUMP PARAMETERS SHOULD MEET A MINIMUM 1000 GPM @ 22.6 FT–HEAD.
4. BY–PASS PUMP TO CONFORM TO THE CITY OF FORT LAUDERDALE NOISE CONTROL ORDINANCES (CHAPTER 17).
5. CONTRACTOR TO PROVIDE BACKUP BY–PASS PUMP DURING CONSTRUCTION.
6. CONTRACTOR SHALL MAINTAIN ADEQUATE MOT TO ALLOW VEHICULAR ACCESS, INCLUDING EMERGENCY VEHICLES.
7. CONTRACTOR SHALL PREPARE AND SUBMIT MAINTENANCE OF TRAFFIC PLAN (MOT) WHERE REQUIRED BY FEDERAL, STATE, COUNTY, OR LOCAL AGENCIES HAVING JURISDICTION. CONTRACTOR SHALL OBTAIN ALL REQUIRED APPROVALS AND PERMITS ASSOCIATED WITH THE MOT'S. ALL MOT'S TO BE ATS CERTIFIED.
8. THE TRAFFIC CONTROL PLANS FOR THE PROJECT SHALL COMPLY WITH THE LATEST EDITION OF THE FLORIDA DEPARTMENT OF TRANSPORTATION ROADWAY AND TRAFFIC DESIGN STANDARDS, INDEX NO. 600–660. MUTCD AND THE STANDARD SPECIFICATIONS. THE CONTRACTOR'S RESPONSE TIME TO ALL REPORTED MALFUNCTIONS OF TRAFFIC SIGNALS WITHIN THE PROJECT LIMITS SHALL BE NO MORE THAN TWO (2) HOURS AND SHALL RESTORE ALL MALFUNCTIONING TRAFFIC SIGNAL EQUIPMENT TO ITS LEVEL OF OPERATION PRIOR TO THE MALFUNCTIONING WITHIN TWENTY–FOUR (24) HOURS. DURING THIS TIME THE CONTRACTOR SHALL PROVIDE AT HIS EXPENSE TEMPORARY TRAFFIC CONTROL DEVICES, FLAGGLER PERSONNEL AND LAW ENFORCEMENT PERSONNEL AS NECESSARY TO MAINTAIN A SAFE AND EFFICIENT FLOW OF TRAFFIC AT THE AFFECTED WORK ZONE. THE ENGINEER OR THE CITY OF FORT LAUDERDALE SHALL APPROVE ALL MODIFICATIONS PRIOR TO THEIR IMPLEMENTATION.
9. EXISTING SIGNS AND PAVEMENT MARKINGS THAT CONFLICT WITH CONSTRUCTION SIGNS AND MARKINGS SHALL BE REMOVED DURING CONSTRUCTION. ALL EXISTING SIGNS THAT ARE REMOVED SHALL BE STOCKPILED IN A SECURE PLACE AND REINSTALLED AFTER CONSTRUCTION. REMOVE AND REPLACE ANY GROUND MOUNT SIGN BY USE OF INDEX NO. 611.
10. THE CONTRACTOR SHALL MAINTAIN EXISTING DRAINAGE PATTERNS AND PREVENT ADVERSE FLOODING OF THE TRAVEL LANES DURING CONSTRUCTION.
11. THE CONTRACTOR SHALL ALSO COORDINATE THE CONSTRUCTION SCHEDULE WITH FDOT, BROWARD COUNTY AND THE CITY OF FORT LAUDERDALE TO AVOID LANE CLOSURES WHICH WOULD ADVERSELY AFFECT TRAFFIC DURING RUSH HOUR.
12. THE CONTRACTOR SHALL BE RESPONSIBLE FOR ALL COSTS ASSOCIATED WITH PREVENTING THE USE OF ANY METERED PARKING SPACES BY THE GENERAL PUBLIC AS A RESULT OF THE MAINTENANCE OF TRAFFIC PLAN OR CONSTRUCTION ACTIVITIES.

ELEVATIONS SHOWN HEREON ARE BASED ON THE NORTH AMERICAN VERTICAL DATUM 1988 (NAVD 1988)

Always call 811 two full business days before you dig to have underground utilities located and marked

Sunshine811.com

BID SET, NOT FOR CONSTRUCTION

Hazen

HAZEN AND SAWYER
4000 HOLLYWOOD BLVD, SUITE 750N
HOLLYWOOD, FLORIDA 33021

Certificate of Authorization No: 2771

THOMPSON & ASSOCIATES
CERTIFICATE OF AUTHORIZATION 28185
PO BOX 22398, FORT LAUDERDALE, FLORIDA 33335
MIAMI-DADE (786) 897.5919
BROWARD (954) 761.1073
PALM BEACH (561) 932.1668

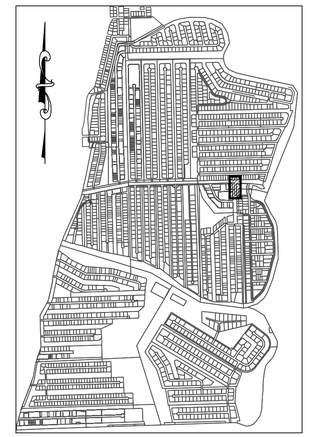

LEGEND:

CONTRACTOR STAGING AREA

ENGINEER: NOEL RODRIGUEZ, P.E.
REG. NO: 48500
DATE: 8/1/2019
TEL: 954–761–1073
FAX: 954–987–2949

DRAWN BY: NR	DATE: 11/27/2018
DESIGNED BY: NR	SCALE: 1" = 10'
CHECKED BY: JFT	
FIELD BOOK: XXXX	

CITY OF FORT LAUDERDALE
PUBLIC WORKS DEPARTMENT
ENGINEERING & ARCHITECTURE
100 North Andrews Avenue, Fort Lauderdale, Florida 33301

REVISIONS

NO.	DATE	BY	CHK'D	DESCRIPTION
1	8/1/19	NR	DB	ADDENDUM #1

PROJECT # 12390
SEWER DESIGN AND IMPLEMENTATION PROGRAM
PUMP STATION D-38
BY-PASS PUMPING PLAN

SHEET NO. C-2 OF 06

TOTAL: 25

CAD FILE: 43194–C02–PLAN

DRAWING FILE NO. 4–XXX–XXXX

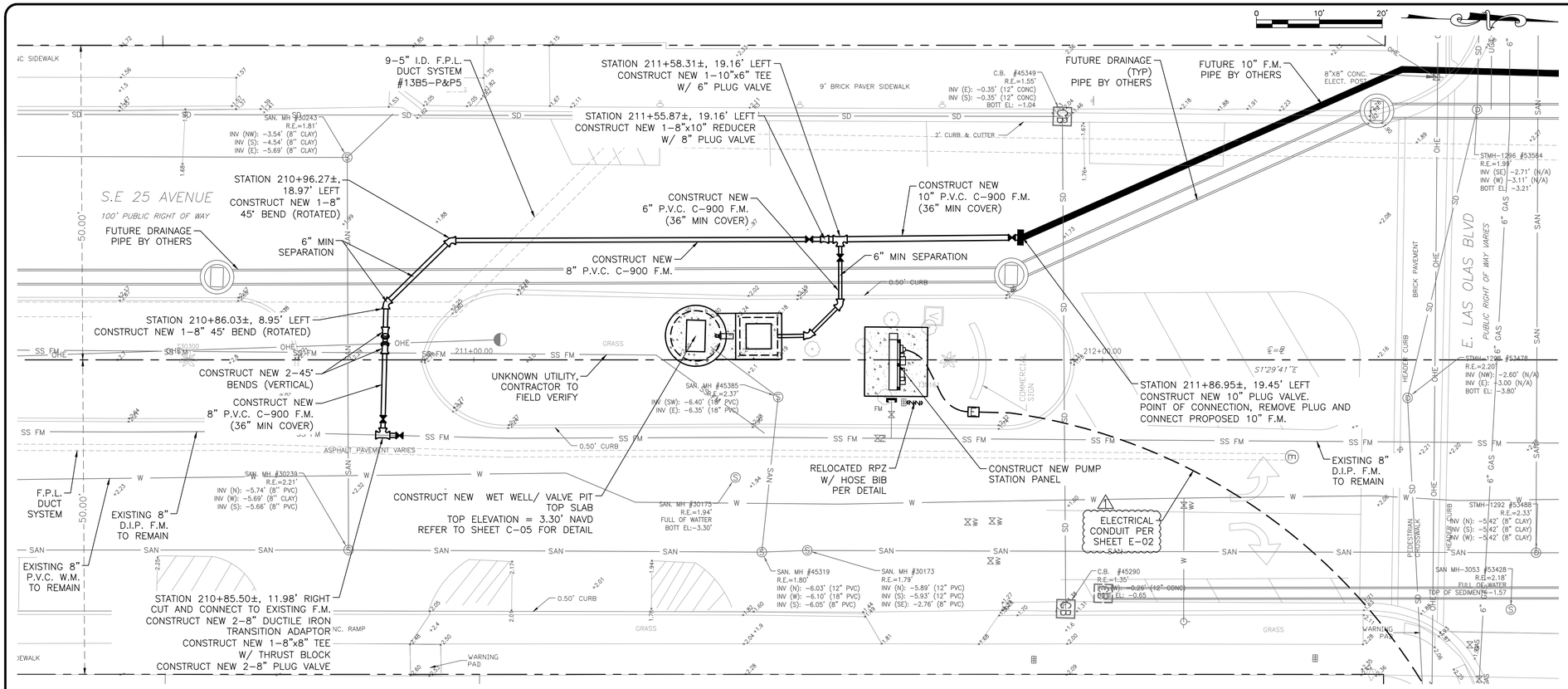

PLAN

SCALE: 1"=10'

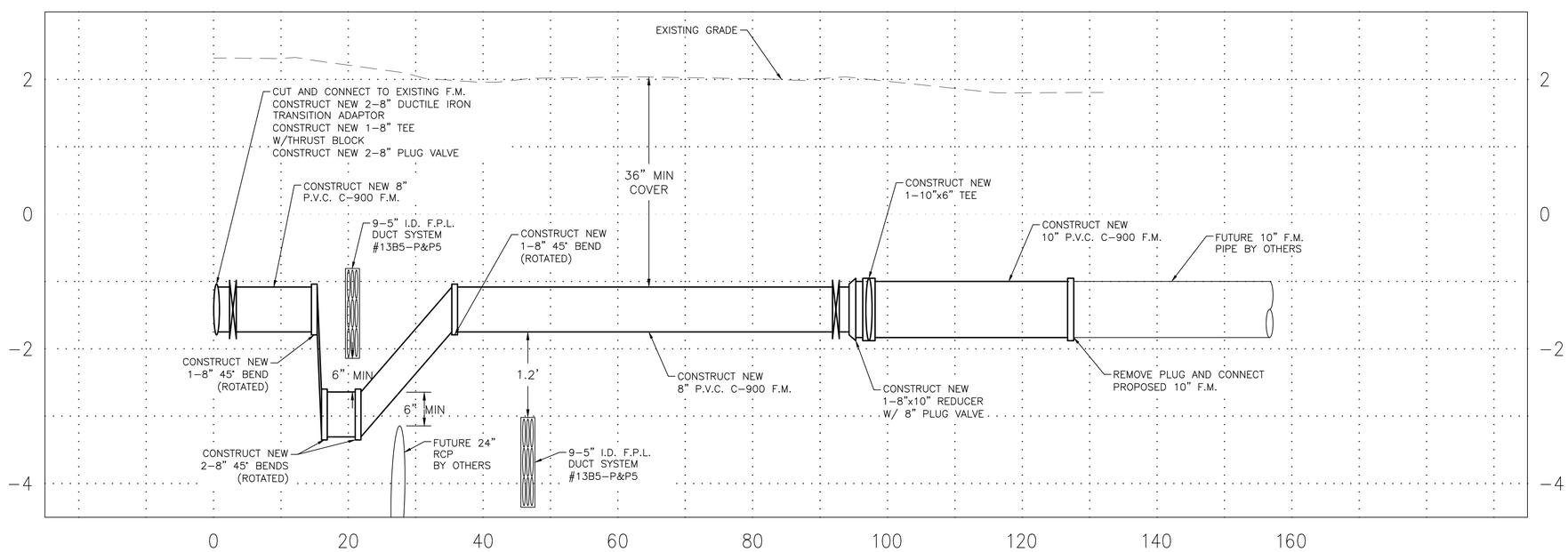

PROFILE

VERTICAL 1"=2'
HORIZONTAL 1"=20'

Hazen

HAZEN AND SAWYER
4000 HOLLYWOOD BLVD, SUITE 750N
HOLLYWOOD, FLORIDA 33021

Certificate of Authorization No: 2771

THOMPSON & ASSOCIATES
CERTIFICATE OF AUTHORIZATION 28185
PO BOX 22398, FORT LAUDERDALE, FLORIDA 33335
MIAMI-DADE (786) 897.5919
BROWARD (954) 761.1073
PALM BEACH (561) 932.1668

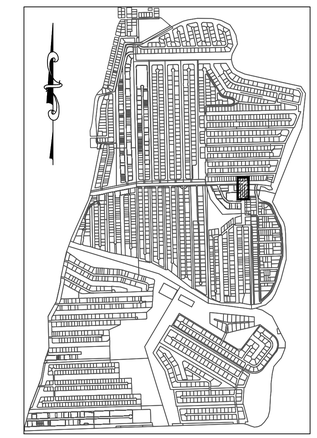

NOTES:

1. CONTRACTOR SHALL REPLACE SURROUNDING GROUND AFFECTED INCLUDING BUT NOT LIMITED TO PAVERS, CURB, SIDEWALK, SOD, AND BRING IT TO EXISTING OR BETTER CONDITIONS.
2. EXISTING UTILITY DEPTHS ARE UNKNOWN UNLESS OTHERWISE INDICATED. LOCATIONS AND DEPTHS ARE ESTIMATES.
3. ALL PROPOSED PIPE TO BE RESTRAINED JOINT.

ELEVATIONS SHOWN HEREON ARE BASED ON THE NORTH AMERICAN VERTICAL DATUM 1988 (NAVD 1988)

Always call 811 two full business days before you dig to have underground utilities located and marked

Sunshine811.com

BID SET, NOT FOR CONSTRUCTION

ENGINEER: NOEL RODRIGUEZ, P.E.
REG. NO: 65300
DATE: 8/1/2019
TEL: 954-761-1073
FAX: 954-987-2949

DRAWN BY: NR	DATE: 11/27/2018
DESIGNED BY: NR	SCALE: 1" = 20'
CHECKED BY: JFT	
FIELD BOOK: XXXX	

CITY OF FORT LAUDERDALE
PUBLIC WORKS DEPARTMENT
ENGINEERING & ARCHITECTURE
100 North Andrews Avenue, Fort Lauderdale, Florida 33301

REVISIONS

NO.	DATE	BY	CHK'D	DESCRIPTION
1	8/1/19	NR	DB	ADDENDUM #1

PROJECT # 12390
SEWER DESIGN AND IMPLEMENTATION PROGRAM
PUMP STATION D-38
FORCE MAIN PLAN AND PROFILE

SHEET NO.	OF
C-3	07

TOTAL: 25
CAD FILE: 43194-C03-PLAN
DRAWING FILE NO. 4-XXX-XXX

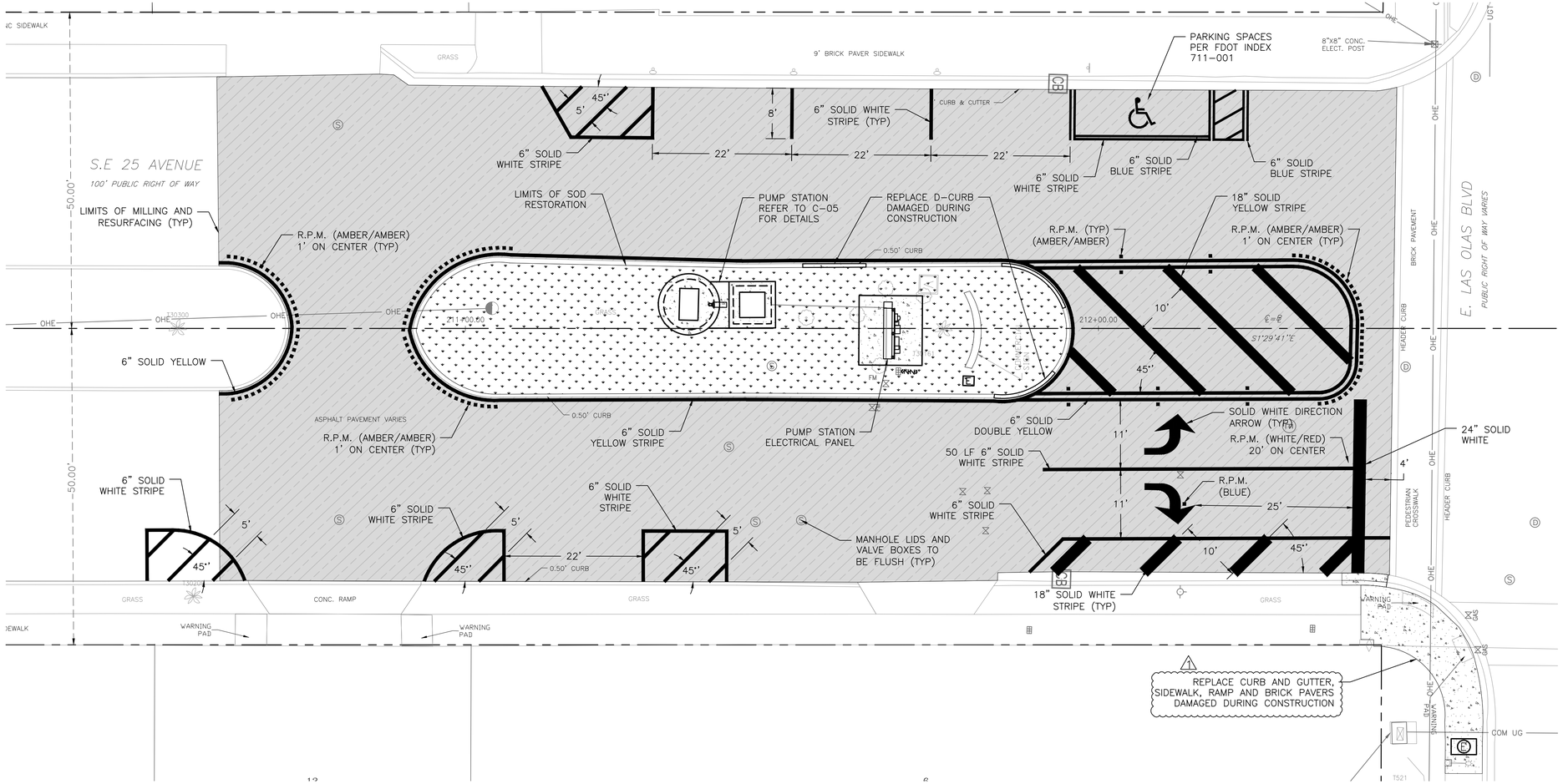

RESTORATION PLAN

SCALE: 1"=10'

LEGEND:

- BRICK PAVEMENT
- CONCRETE
- MILL & RESURFACE
- SOD RESTORATION

NOTES:

1. CONTRACTOR SHALL REPLACE SURROUNDING GROUND AFFECTED INCLUDING BUT NOT LIMITED TO PAVERS, CURB, SIDEWALK, SOD, AND BRING IT TO EXISTING OR BETTER CONDITIONS.
2. CONTRACTOR TO SUBMIT SIGN AND SEALED LANDSCAPE AND IRRIGATION PLANS TO THE CITY FOR APPROVAL.
3. SIDEWALK, RAMP AND CURBS TO BE REPAIRED PER FDOT SPECIFICATIONS.
4. THE CITY SHALL BE RESPONSIBLE FOR REVIEWING AND APPROVING THE PAVEMENT MARKING AND SIGNING.
5. THE CITY SHALL BE RESPONSIBLE FOR INSPECTING AND ACCEPTING THE PM&S PORTION OF THE PROJECT, FOR MAINTENANCE BY THE CITY OF FORT LAUDERDALE.

ELEVATIONS SHOWN HEREON ARE BASED ON THE NORTH AMERICAN VERTICAL DATUM 1988 (NAVD 1988)

Always call 811 two full business days before you dig to have underground utilities located and marked

Sunshine811.com

BID SET, NOT FOR CONSTRUCTION

Hazen

HAZEN AND SAWYER
4000 HOLLYWOOD BLVD, SUITE 750N
HOLLYWOOD, FLORIDA 33021

Certificate of Authorization No: 2771

THOMPSON & ASSOCIATES
CERTIFICATE OF AUTHORIZATION 28185
PO BOX 22398, FORT LAUDERDALE, FLORIDA 33335
MIAMI-DADE (786) 897.5919
BROWARD (954) 761.1073
PALM BEACH (561) 932.1668

ENGINEER: NOEL RODRIGUEZ, P.E.
REG. NO: 48830
DATE: 8/1/2019
TEL: 954-761-1073
FAX: 954-987-2949

DRAWN BY: NR	DATE: 11/27/2018
DESIGNED BY: NR	SCALE: N/A
CHECKED BY: JFT	
FIELD BOOK: XXXX	

CITY OF FORT LAUDERDALE
PUBLIC WORKS DEPARTMENT
ENGINEERING & ARCHITECTURE
100 North Andrews Avenue, Fort Lauderdale, Florida 33301

REVISIONS

NO.	DATE	BY	CHK'D	DESCRIPTION
1	8/1/19	NR	DB	ADDENDUM #1

PROJECT # 12390
SEWER DESIGN AND IMPLEMENTATION PROGRAM
PUMP STATION D-38
RESTORATION PLAN

SHEET NO.	OF
C-4	08

TOTAL: 25

CAD FILE: 43194-C04-PLAN

DRAWING FILE NO. 4-XXX-XXXX

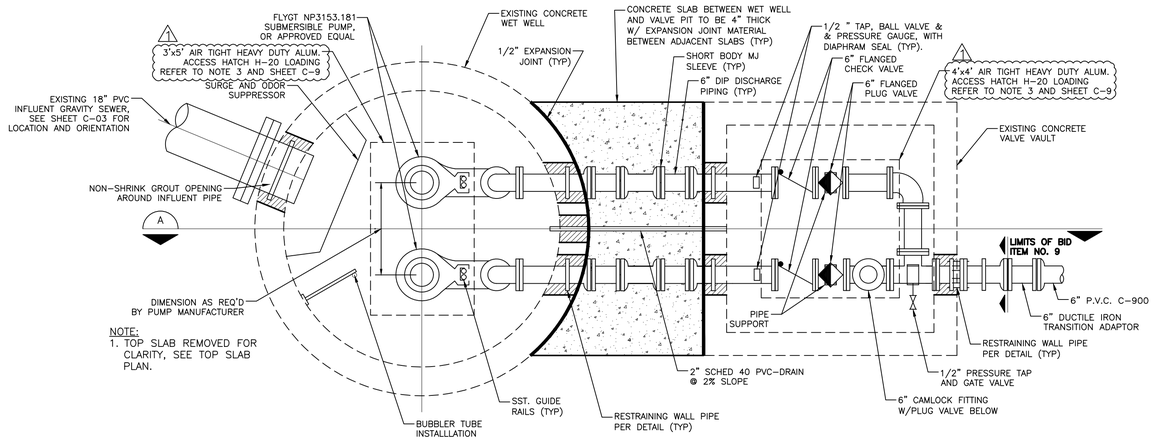

PUMP STATION DETAIL

NTS

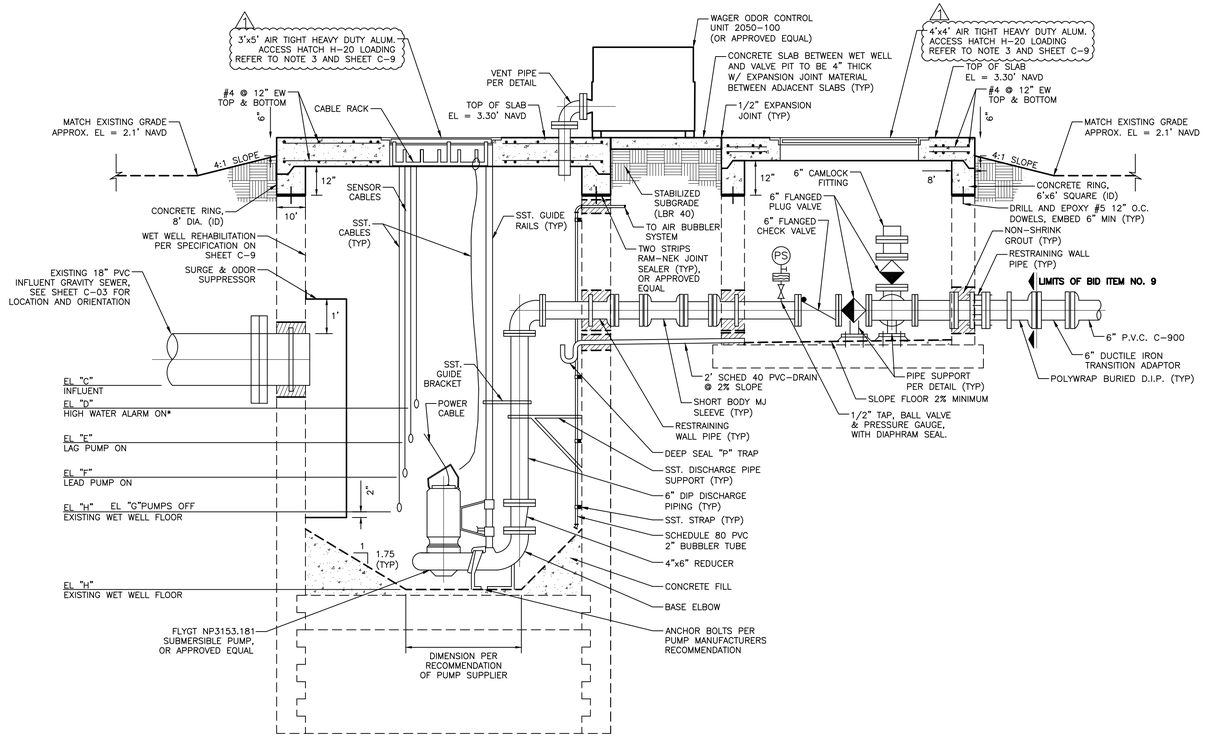

* (ALARM HAS LIGHT, AUDIBLE ALARM, AND DIALER RTU TO CITY: ALARM WILL BE DEACTIVATED BY A MANUAL SWITCH)

SECTION A

NTS

ELEVATIONS (FEET–NAVD)

LETTER	LEVEL DESCRIPTION	
A	TOP OF EXISTING PUMP STATION & VAULT SLABS	3.30
B	FINISH GRADE ADJACENT SLAB	2.80
C	INFLUENT GRAVITY SEWER INVERT	(–)7.10
D	HIGH WATER ALARM	(–)8.10
E	LAG PUMP ON	(–)8.60
F	LEAD PUMP ON	(–)9.35
G	PUMPS OFF	(–)11.35
H	EXISTING WET WELL FLOOR	(–)12.60
	EXISTING INSIDE DIA. PUMP STATION	8'
	FORCE MAIN PIPING (D.I.P.)	6"
	PUMP OPERATION REQUIREMENTS	576 gpm @ 63.2' 15 HP

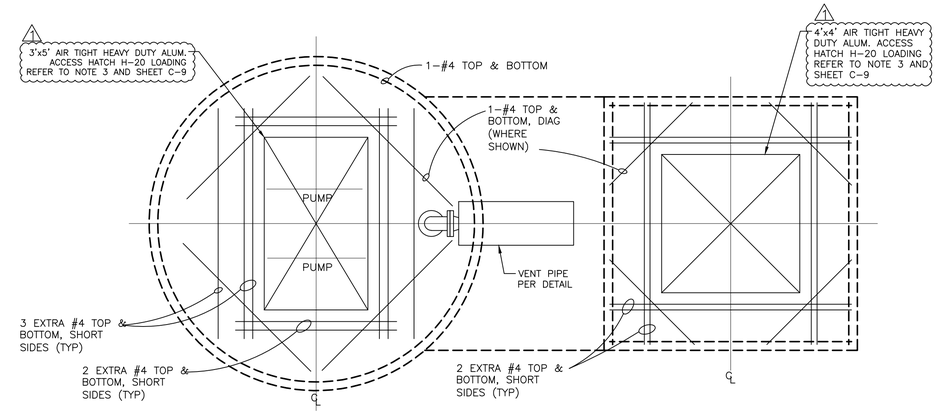

TOP SLAB DETAIL

NTS

NOTES:

1. VARIES– CONTRACTOR TO ORDER WALL PIPE WITH DIMENSIONS NECESSARY TO CENTER COLLAR IN WALL & PLACE FLANGE AT DESIRED LOCATION.
2. APPLY APPROVED WATERPROOF BONDING AGENT TO EXISTING CONCRETE SURFACE BEFORE PLACING NON–SHRINK GROUT, DRY PACK FROM EARTH SIDE, APPLY APPROVED WATERPROOF COATING AS SPECIFIED TO ELIMINATE SEEPAGE INTO VAULT OR WET WELL FROM PIPE/CONDUIT PENETRATIONS.
3. HATCHES TO BE EQUIPPED WITH AUTOMATIC HOLD OPEN ARMS, HORIZONTAL COMPRESSION SPRINGS, WATERTIGHT SLAM LOCKS, RECESSED OVERSIZE PADLOCK BOX, ODOR REDUCING GASKET AND SAFETY CHAINS. HINGES TO BE ATTACHED USING TAMPER PROOF CARRIAGE BOLTS WITH WELDED NUTS. WETWELL AND VALVE VAULT HATCHES SHALL BE US FOUNDARY ALUMINUM HATCHES OR APPROVED EQUAL. ALL HARDWARE SHALL BE STAINLESS STEEL.
4. BUBBLER TUBE INSTALL USING SST PIPESTRAPS & SST UNISTRUT.
5. ALL BOLTS, NUTS, BRACKETS, AND SUPPORT PIECES IN WET WELL TO BE STAINLESS STEEL

Hazen

HAZEN AND SAWYER
4000 HOLLYWOOD BLVD, SUITE 750N
HOLLYWOOD, FLORIDA 33021

Certificate of Authorization No: 2771

THOMPSON & ASSOCIATES
CERTIFICATE OF AUTHORIZATION 28185
PO BOX 22398, FORT LAUDERDALE, FLORIDA 33335
MIAMI-DADE (786) 897.5919
BROWARD (954) 761.1073
PALM BEACH (561) 932.1668

ENGINEER: NOEL RODRIGUEZ, P.E.
REG. NO: 48830
DATE: 8/1/2019
TEL: 954-761-1073
FAX: 954-987-2949

DRAWN BY: NR | DATE: 11/27/2018
DESIGNED BY: NR | SCALE: N/A
CHECKED BY: JFT | FIELD BOOK: XXXX

CITY OF FORT LAUDERDALE
PUBLIC WORKS DEPARTMENT
ENGINEERING & ARCHITECTURE
100 North Andrews Avenue, Fort Lauderdale, Florida 33301

REVISIONS

NO.	DATE	BY	CHK'D	DESCRIPTION
1	8/1/19	NR	DB	ADDENDUM #1

BID SET, NOT FOR CONSTRUCTION

PROJECT # 12390
SEWER DESIGN AND IMPLEMENTATION PROGRAM
PUMP STATION D-38
PUMP STATION DETAILS

SHEET NO. C-5 OF 09
TOTAL: 25
CAD FILE: 43194-C05-DETL
DRAWING FILE NO. 4-XXX-XXX
EXHIBIT 5

ACCESS HATCH:

1. EACH HATCH SHALL BE DESIGNED ACCORDING TO THE OPENINGS SHOWN ON THE DRAWINGS. THE ALUMINUM ACCESS FRAMES SHALL BE MANUFACTURED FROM 1/4–INCH THICK, EXTRUDED 6063–T5 ALUMINUM.
2. THE FRAME SHALL BE DRAINABLE WITH A 1 1/2–INCH THREADED DRAIN COUPLING LOCATED ON CORNER FRAME.
3. THE DOOR PANELS SHALL CLOSE FLUSH AND SHALL BE 1/4–INCH THICK 5086–H34 ALUMINUM DIAMOND (CHECKER) PLATE REINFORCED FOR AASHTO H–20–44 WHEEL LOADS.
4. REMOVABLE ALUMINUM CROSS–BEAMS SHALL BE PROVIDED BY THE HATCH SUPPLIER AS REQUIRED TO ACCOMPLISH THE STATED LOADING.
5. THE DOORS SHALL HAVE HEAVY DUTY STAINLESS STEEL BUTT HINGES WITH TAMPER–PROOF FASTENERS.
6. ALL HARDWARE SHALL BE MADE OF TYPE 316 STAINLESS STEEL.
7. EACH DOOR SHALL HAVE SPRING OPERATORS, SUCH THAT THE MAXIMUM LIFTING EFFORT IS LESS THAN 25 POUNDS.
8. THE HATCH SUPPLIER SHALL PROVIDE THE NUMBER OF SPRING OPERATORS AS REQUIRED TO ACCOMPLISH THE MAXIMUM LIFTING REQUIREMENT.
9. EACH DOOR SHALL OPEN TO 90 DEGREE AND LOCK AUTOMATICALLY WITH A STAINLESS STEEL, POSITIVE LOCKING ARM AND A STAINLESS STEEL RELEASE HANDLE.
10. EACH DOOR SHALL HAVE A RECESSED STAINLESS STEEL LIFTING HANDLE AND RECESSED OVERSIZED PADLOCK BOX.
11. THE HATCH SHALL BE PROVIDED WITH A TYPE 316 STAINLESS STEEL SLAM–LOCK WITH A REMOVABLE HANDLE.
12. ALL ACCESS DOORS SHALL BE DESIGNED WITH A NEOPRENE GASKET ON THE INSIDE LIP OF THE FRAME PERIMETER, TO FORM AN ESSENTIALLY AIR–TIGHT SEAL.
13. ALL ACCESS DOORS SHALL BE EQUIPPED WITH A MINIMUM OF FOUR (4) STAINLESS STEEL CARRIAGE BOLTS WITH WELDED NUTS TO SECURE THE DOORS IN THE DOWN POSITION. BOLTS SHALL BE PER THE MANUFACTURERS RECOMMENDATION.

WETWELL REHABILITATION:

1. SURFACE PREPARATION

   A. ANY LOOSE, UNSOUND, OR CRACKED BRICK OR CONCRETE SHALL BE CHISELED OR HAMMERED OUT.

   B. ALL SURFACES TO RECEIVE EITHER THE ONE COMPONENT REINFORCED MORTAR OR EPOXY LINING SHALL BE STRUCTURALLY SOUND AND SHALL BE CLEANED TO REMOVE LAITANCE, GREASE. LOOSE MORTAR, PAINT OR OTHER SURFACE CONTAMINANTS USING SAND BLASTING, HYDRO–GRIT BLASTING AT 3,500 PSI MINIMUM OR OTHER MECHANICAL SCARIFICATION TECHNIQUES APPROVED BY THE ENGINEER.

   C. SURFACE SHALL BE TESTED BY THE CONTRACTOR, IN THE PRESENCE OF THE ENGINEER,USING A SURFACE pH TESTER EQUAL TO INSTA–CHECK SURFACE pH PENCIL AS MANUFACTURED BY PHYDRION. SURFACE SHALL INDICATE A pH=7.0 OR GREATER.

   D. ALL ACTIVE LEAKS IN THE STRUCTURE SHALL BE STOPPED USING CHEMICAL GROUTING AND HYDRAULIC CEMENT.

   E. ALL CRACKS, VOIDS AND REMOVED STEP HOLES SHALL BE FILLED USING A WATER RESISTANT FAST–SETTING CEMENT PATCH.

2. REBUILDING CONCRETE SURFACES

   A. THE CONCRETE SHALL BE RETURNED TO ITS ORIGINAL WALL THICKNESS USING A ONE COMPONENT MORTAR, MINIMUM INSTALLED THICKNESS SHALL BE 1/2".

   B. ONE COMPONENT REINFORCED WET MORTAR: THE ONE COMPONENT MORTAR SHALL BE MICROSILICA ENHANCED, FIBER REINFORCED AND BE DESIGNED FOR CORROSIVE ENVIRONMENTS WITH A pH=2.0 OR HIGHER. REINFORCED MORTAR SHALL HAVE THE FOLLOWING MINIMUM PHYSICAL PROPERTIES:

FLEXURAL STRENGTH	1000 PSI @ 28 DAYS ASTM C78–84
COMPRESSIVE STRENGTH	9000 PSI @ 28 DAYS ASTM C109–92
DENSITY(WET):	130 LB/CU. FT. ASTM C138–92
SPLITTING TENSILE STRENGTH:	700 PSI @ 28 DAYS ASTM C496–90
SLANT SHEAR BOND STRENGTH:	2250PSI @ 28 DAYS ASTM C882–91
SULFATE RESISTANCE WEIGHTLOSS 84 DAY IMMERSION	pH 1.0 <.97% ASTM C–267 pH 2.0 <.30% pH 3.0 <.18%

   C. MATERIAL SHALL BE BASF SP15, OR APPROVED EQUAL.

1 PAINTING & COATINGS:

1. WETWELL & VALVE VAULT EXTERIOR: THE EXTERIOR OF WET WELL & VALVE VAULTS SHALL BE COATED WITH TWO (2), 10 MILS (DFT) EACH COAT OF A BITUMASTIC COATING (20 MILS TOTAL DFT). BITUMASTIC COATING SHALL BE CARBOLINE (KOPPERS) 300M, OR APPROVED EQUAL.
2. WETWELL INTERIOR: THE INTERIOR OF A NEW OR REHABILITATED WET WELL, WHERE DIRECTED BY THE CITY, SHALL BE COATED WITH A SPRAYABLE, HIGH BUILD, MOISTURE TOLERANT, CHEMICAL RESISTANT EPOXY COATING DESIGNED TO BE APPLIED ON DRY OR DAMP CONCRETE SURFACES AND YIELDING A HARD DURABLE CHEMICAL RESISTANT FINISH TO A pH OF 1.0, EPOXY COATING SHALL BE BASF SEWER GUARD HBS 100, OR OTHER APPROVED EQUAL. APPLY MATERIAL USING A 30:O OR 45:1 AIRLESS SPRAYER TO A MINIMUM DRY THICKNESS OF 60 MILS IN TWO 30 MILS COATS.
3. VALVE VAULT CONCRETE INTERIOR SURFACES: THE INTERIOR CONCRETE SURFACES OF VALVE VAULTS SHALL BE COATED WITH A 100% SOLIDS POLYAMINE EPOXY SPECIFICALLY DESIGNED FOR WASTEWATER IMMERSION AND LOW PERMEATION TO H2S GAS. MATERIAL SHALL BE IN CONFORM WITH THE PRODUCT SPECIFICATION SHEETS, OR APPROVED EQUAL, APPLIED IN TWO (2) COATS, 15.0 MILS (DFT) EACH, (30.0 MILS DFT, TOTAL). FINAL COLOR TO BE BEIGE. SURFACE PREPARATION, PRIMING AND APPLICATION SHALL BE IN ACCORDANCE WITH THE MORE STRINGENT OF THE MANUFACTURERS RECOMMENDATIONS OR LISTED IN THE PRODUCT SPECIFICATION SHEETS.
4. DUCTILE IRON PIPE AND FITTINGS: DIP EXTERIOR SURFACES SHALL BE COATED WITH A 100% POLYAMINE EPOXY SPECIFICALLY DESIGN FOR WASTEWATER IMMERSION AND LOW PERMEATION TO H2S GAS. MATERIAL SHALL BE IN CONFORM WITH THE PRODUCT SPECIFICATION SHEETS, OR APPROVED EQUAL, APPLIED IN TWO (2) COATS 20 MILS (DFT) EACH (40.0 MIL DFT, TOTAL). DIP INTERIOR SURFACES SHALL BE COATED WITH 40 MILS (DFT) OF PROTECTO 401.
5. VALVES SHALL RECEIVE ONLY THE FINAL 20 MIL (DFT) COAT. FINAL COLOR TO BE BEIGE. SURFACE PREPARATION, PRIMING AND APPLICATION SHALL BE IN ACCORDANCE WITH THE MORE STRINGENT OF THE MANUFACTURER'S RECOMMENDATIONS OR THE CITY'S SPECIFICATIONS. SURFACE PREPARATION AND APPLICATION SHALL BE IN ACCORDANCE WITH THE MANUFACTURER'S RECOMMENDATION. CERTIFICATION OF MANUFACTURER SHALL BE PROVIDED.

Hazen

HAZEN AND SAWYER
4000 HOLLYWOOD BLVD, SUITE 750N
HOLLYWOOD, FLORIDA 33021

Certificate of Authorization No: 2771

THOMPSON & ASSOCIATES
CERTIFICATE OF AUTHORIZATION 28185
PO BOX 22398, FORT LAUDERDALE, FLORIDA 33335
MIAMI-DADE (786) 897.5919
BROWARD (954) 761.1073
PALM BEACH (561) 932.1668

ENGINEER: NOEL RODRIGUEZ, P.E.
REG. NO: 48830
DATE: 8/1/2019
TEL: 954–761–1073
FAX: 954–987–2949

DRAWN BY: NR
DATE: 11/27/2018
DESIGNED BY: NR
SCALE: N/A
CHECKED BY: JFT
FIELD BOOK: XXXX

CITY OF FORT LAUDERDALE
PUBLIC WORKS DEPARTMENT
ENGINEERING & ARCHITECTURE
100 North Andrews Avenue, Fort Lauderdale, Florida 33301

REVISIONS

NO.	DATE	BY	CHK'D	DESCRIPTION
1	8/1/19	NR	DB	ADDENDUM #1

BID SET, NOT FOR CONSTRUCTION

PROJECT # 12390
SEWER DESIGN AND
IMPLEMENTATION PROGRAM
PUMP STATION D-38
LIFT STATION NOTES

SHEET NO. C-9 OF 13
TOTAL: 25
CAD FILE: 43194–C09–NOTE
DRAWING FILE NO. 4–XXX–XXX

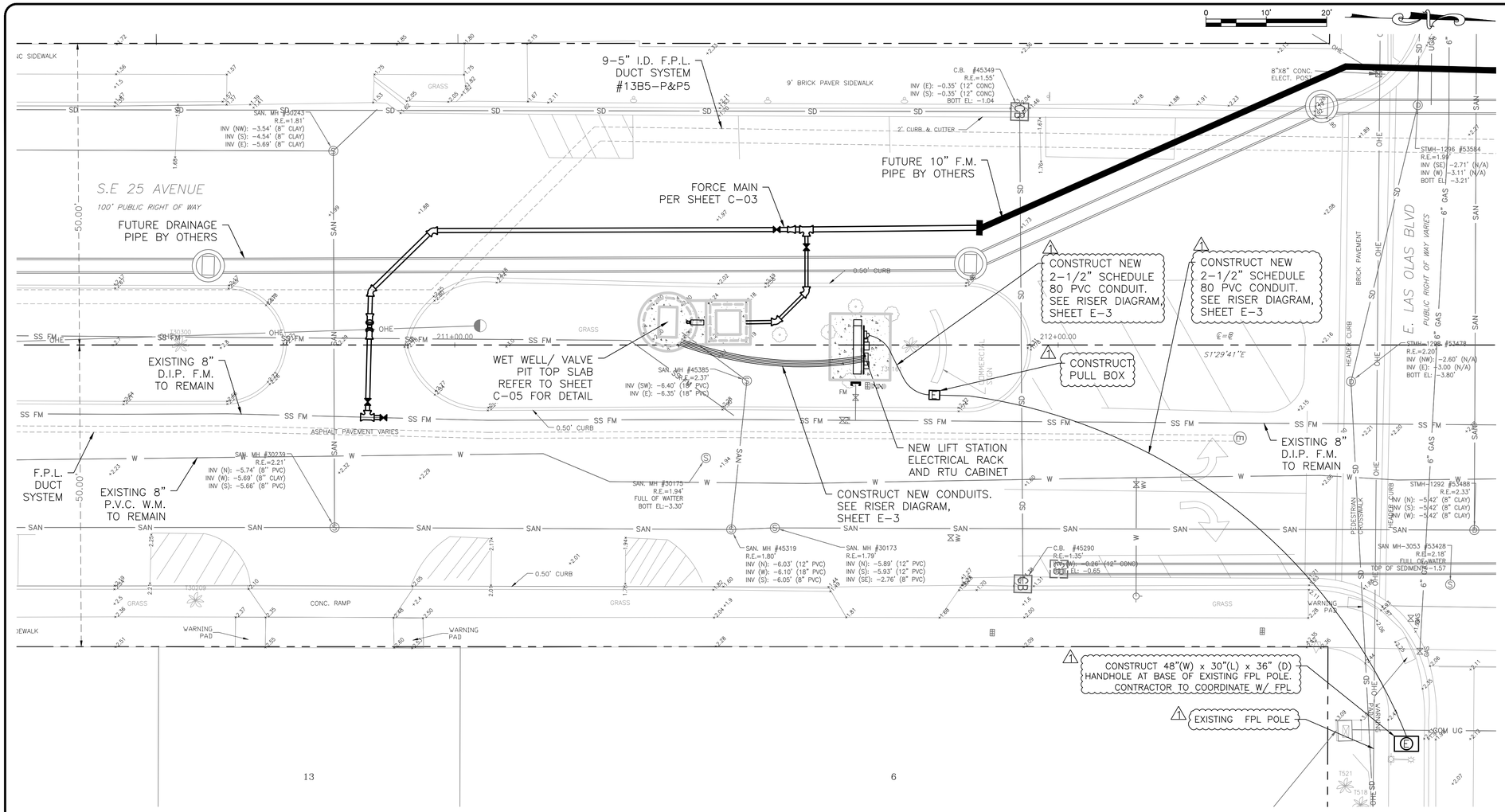

ELECTRICAL SITE PLAN

SCALE: 1"=10'

Hazen

HAZEN AND SAWYER
4000 HOLLYWOOD BLVD, SUITE 750N
HOLLYWOOD, FLORIDA 33021

Certificate of Authorization No: 2771

THOMPSON & ASSOCIATES
CERTIFICATE OF AUTHORIZATION 28185
PO BOX 22398, FORT LAUDERDALE, FLORIDA 33335
MIAMI-DADE (786) 897.5919
BROWARD (954) 761.1073
PALM BEACH (561) 932.1668

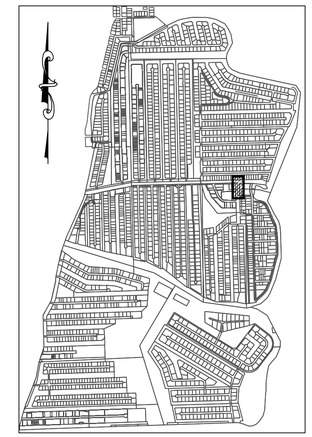

NOTES:

1. CONTRACTOR SHALL REPLACE SURROUNDING GROUND AFFECTED INCLUDING BUT NOT LIMITED TO PAVERS, SIDEWALK, SOD, LANDSCAPE AND BRING IT TO EXISTING OR BETTER CONDITIONS.
2. EXISTING UTILITY DEPTHS ARE UNKNOWN UNLESS OTHERWISE INDICATED. LOCATIONS AND DEPTHS ARE ESTIMATES.

ELEVATIONS SHOWN HEREON ARE BASED ON THE NORTH AMERICAN VERTICAL DATUM 1988 (NAVD 1988)

Always call 811 two full business days before you dig to have underground utilities located and marked

Sunshine811.com

BID SET, NOT FOR CONSTRUCTION

ENGINEER: NOEL RODRIGUEZ, P.E.
LICENSE NO. 84830
DATE: 8/1/2019
TEL: 954–761–1073
FAX: 954–987–2949

DRAWN BY: SPH
DATE: 11/27/2018
DESIGNED BY: SPH
SCALE: 1" = 20'
CHECKED BY: LMS
FIELD BOOK: XXXX

CITY OF FORT LAUDERDALE
PUBLIC WORKS DEPARTMENT
ENGINEERING & ARCHITECTURE
100 North Andrews Avenue, Fort Lauderdale, Florida 33301

REVISIONS

NO.	DATE	BY	CHK'D	DESCRIPTION
1	8/1/19	NR	DB	ADDENDUM #1

PROJECT # 12390
SEWER DESIGN AND IMPLEMENTATION PROGRAM
PUMP STATION D-38
ELECTRICAL SITE PLAN

SHEET NO. E-2 OF 15
TOTAL: 25
CAD FILE: 43194–E02–PLAN
DRAWING FILE NO. 4–XXX–XX

City of Fort Lauderdale • Procurement Services Division
100 N. Andrews Avenue, 619 • Fort Lauderdale, Florida 33301
954-828-5933 Fax 954-828-5576
purchase@fortlauderdale.gov

RFP 12305-493
PROJECT No. 12390
REPLACEMENT OF PUMP STATION D-38

ADDENDUM NUMBER 2
AUGUST 07, 2019

The following Addendum is hereby made a part of the Plans and Specifications and shall be included with all contract documents:

Acknowledge receipt of this Addendum by inserting its number and date on the Construction Bid Certification. **All changes are in bold, red italics.**

DRAWINGS AND SPECIFICATIONS

1. ***DELETE*** and ***REPLACE*** the following drawings**:**

   - ***DELETE*** Drawing E-2 issued with the bid documents and ***REPLACE*** with the drawing issued with this Addendum.
   - ***DELETE*** Drawing E-3 issued with the bid documents and ***REPLACE*** with the drawing issued with this Addendum.

LINE ITEM 12305-493-01-02

2. ***CHANGE*** Line Item No. 2, Maintenance of Traffic, to add the following language:

   Maintenance of Traffic include furnishing and installing all temporary road, pedestrian facilities, all required traffic control devices, signs including portable changeable message signs, portable temporary signals, associated required accessories and staff, and law enforcement officers as required to maintain vehicular and pedestrian traffic, **all costs associated with preventing the use of any metered parking spaces by the general public as a result of the Maintenance of Traffic Plan or construction activities** and all else necessary for a complete and functional Maintenance of Traffic operation. **The cost for each parking space is $25 per day and shall be paid to the Transportation and Mobility Department at the City of Fort Lauderdale**. Demolition, removal and disposal of all temporary road and pedestrian facilities are also included in this line item.

City of Fort Lauderdale • Procurement Services Division
100 N. Andrews Avenue, 619 • Fort Lauderdale, Florida 33301
954-828-5933 Fax 954-828-5576
purchase@fortlauderdale.gov

All other terms, conditions, and specifications remain unchanged.

Penelope Burger
Procurement Administrator

Company Name: _____
(please print)

Bidder's Signature: _____

Date: _____

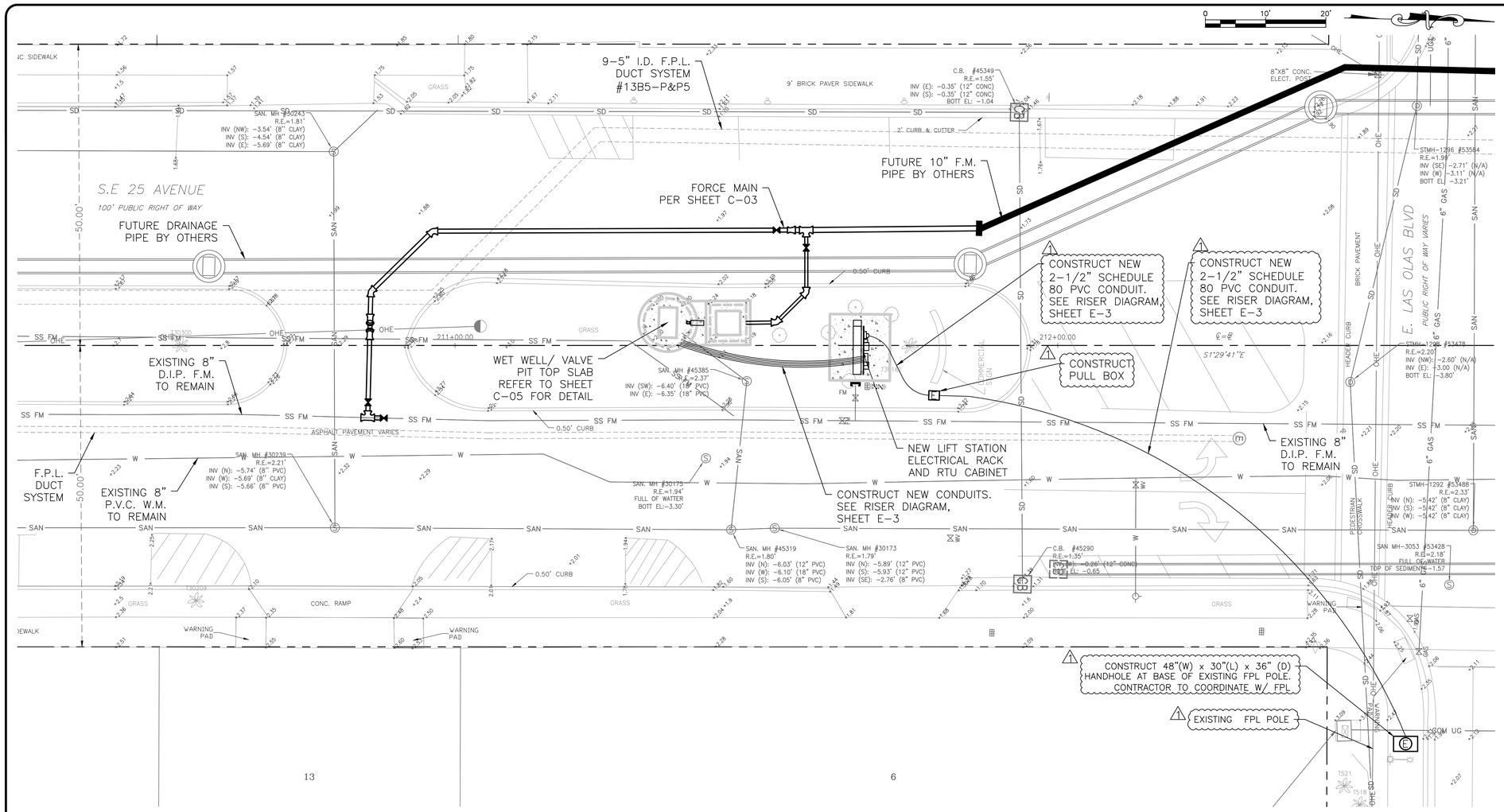

ELECTRICAL SITE PLAN

SCALE: 1"=10'

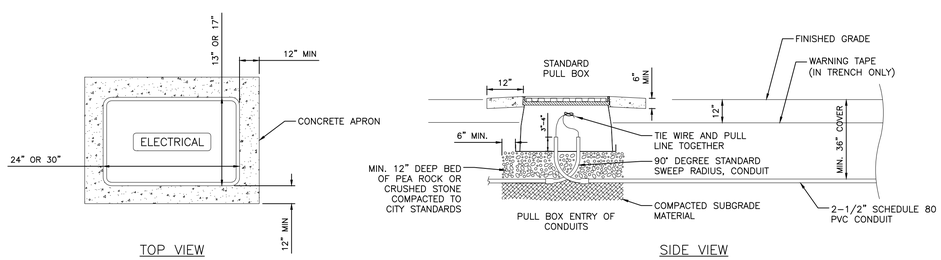

TYPICAL PULL BOX AND CONDUIT DETAIL

STANDARD PULL BOX NOTES:

1. PULL BOXES SHALL HAVE AN OPEN BOTTOM. PULL BOX MATERIAL SHALL BE HEAVY DUTY COMPOSITE REINFORCED POLYMER CONCRETE WITH A MINIMUM ANSI TIER 22 RATING COVER STAMPED; ELECTRIC TWO BOLTS, NON METAL.
2. ALL PULL BOXES SHALL BE PROVIDED WITH CONCRETE APRONS WHEN NOT LOCATED WITHIN SIDEWALK. APRON SHALL BE FLUSH WITH FINISHED GRADE AND 3,000 PSI STRUCTURAL CLASS 1 CONCRETE.
3. PULL BOX SHALL NOT BE PLACED IN PEDESTRIAN RAMPS. PULL BOXES SHALL NOT BE LOCATED AT THE BOTTOM OF ANY DITCH OR RETENTION AREA/POND OR ANY OTHER LOW–LYING LOCATION WITH POOR DRAINAGE.
4. PULL BOXES SHALL BE PLACED 4' FROM FACE OF CURB. IF THERE IS NO CURB, THEN PULL BOXES SHALL BE PLACED AT LEAST 10' FROM THE EDGE OF PAVEMENT.
5. WHEN PULL BOXES ARE INSTALLED IN EXISTING SIDEWALKS, THE ENTIRE FLAG OF SIDEWALK WILL BE REPLACED.
6. WHEN TRENCHING, INSTALL WARNING TAPE, 3' WIDE MARKED "CAUTION BURIED ELECTRIC LINE BELOW", 1' FROM FINISHED GRADE.

Hazen

HAZEN AND SAWYER
4000 HOLLYWOOD BLVD, SUITE 750N
HOLLYWOOD, FLORIDA 33021

Certificate of Authorization No: 2771

THOMPSON & ASSOCIATES
CERTIFICATE OF AUTHORIZATION 28185
PO BOX 22398, FORT LAUDERDALE, FLORIDA 33335
MIAMI-DADE (786) 897.5919
BROWARD (954) 761.1073
PALM BEACH (561) 932.1668

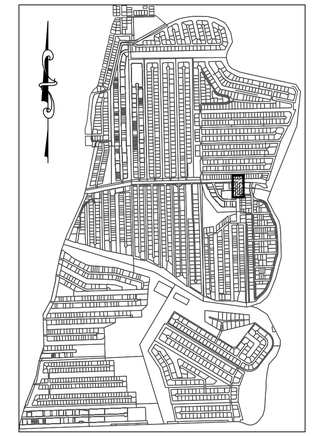

NOTES:

1. CONTRACTOR SHALL REPLACE SURROUNDING GROUND AFFECTED INCLUDING BUT NOT LIMITED TO PAVERS, SIDEWALK, SOD, LANDSCAPE AND BRING IT TO EXISTING OR BETTER CONDITIONS.
2. EXISTING UTILITY DEPTHS ARE UNKNOWN UNLESS OTHERWISE INDICATED. LOCATIONS AND DEPTHS ARE ESTIMATES.

ELEVATIONS SHOWN HEREON ARE BASED ON THE NORTH AMERICAN VERTICAL DATUM 1988 (NAVD 1988)

Always call 811 two full business days before you dig to have underground utilities located and marked

Sunshine811.com

BID SET, NOT FOR CONSTRUCTION

ENGINEER: NOEL RODRIGUEZ, P.E.
REG. NO. 68810
DATE: 8/6/2019
TEL: 954–761–1073
FAX: 954–987–2949

DRAWN BY: SPH
DATE: 11/27/2018
DESIGNED BY: SPH
SCALE: 1" = 20'
CHECKED BY: LMS
FIELD BOOK: XXXX

CITY OF FORT LAUDERDALE
PUBLIC WORKS DEPARTMENT
ENGINEERING & ARCHITECTURE
100 North Andrews Avenue, Fort Lauderdale, Florida 33301

REVISIONS

NO.	DATE	BY	CHK'D	DESCRIPTION
1	8/1/19	NR	DB	ADDENDUM #1
2	8/6/19	NR	DB	ADDENDUM #2

PROJECT # 12390
SEWER DESIGN AND IMPLEMENTATION PROGRAM
PUMP STATION D-38
ELECTRICAL SITE PLAN

SHEET NO. E-2 OF 15
TOTAL: 25
CAD FILE: 43194–E02–PLAN
DRAWING FILE NO. 4–XXX–XXX

Hazen

HAZEN AND SAWYER
4000 HOLLYWOOD BLVD, SUITE 750N
HOLLYWOOD, FLORIDA 33021

Certificate of Authorization No: 2771

THOMPSON & ASSOCIATES
CERTIFICATE OF AUTHORIZATION 28185
PO BOX 22398, FORT LAUDERDALE, FLORIDA 33335
MIAMI-DADE (786) 897.5919
BROWARD (954) 761.1073
PALM BEACH (561) 932.1668

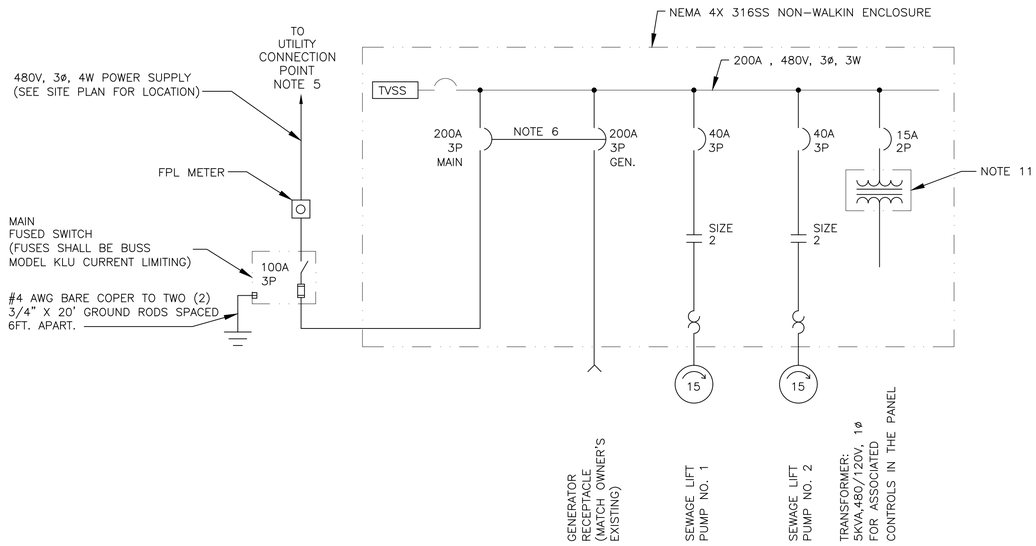

DUPLEX PUMP STATION 38 ONE LINE DIAGRAM

MOTORS ALTERNATE LEAD/LAG LOGIC

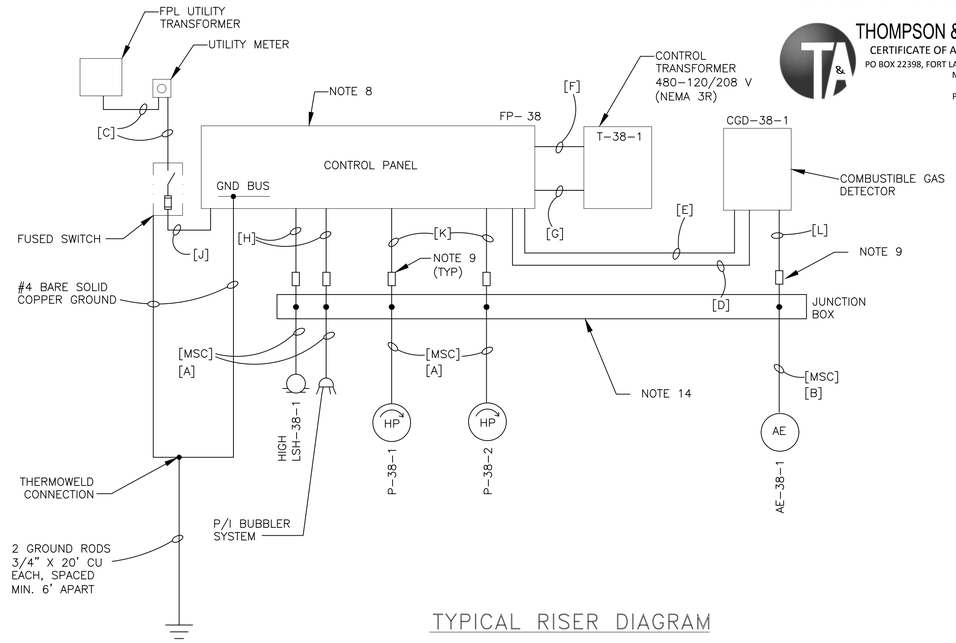

TYPICAL RISER DIAGRAM

GENERAL ELECTRICAL NOTES:

1. THE AREA INSIDE THE WET WELL IS A HAZARDOUS, CLASS 1, DIV. 2 LOCATION
2. THE AREA WITHIN 3 FEET FROM THIS HATCH AND 1.5 FEET ABOVE THE WET WELL SLAB IS A HAZARDOUS, CLASS 1, DIV. 2 LOCATION.
3. THE AREA WITHIN A 3 FEET RADIUS FROM THE VENT OPENING IS A HAZARDOUS, CLASS 1, DIV. 2 LOCATION. THE AREA WITHIN A 5 FEET RADIUS FROM THE VENT OPENING IS A HAZARDOUS, CLASS 1, DIV. 2 LOCATION.
4. THE AREA INSIDE THE VALVE VAULT IS A HAZARDOUS, CLASS 1, DIV. 2 LOCATION.
5. CONTRACTOR SHALL PROVIDE NEW UNDERGROUND SERVICE FROM UTILITY CONNECTION POINT TO METER BASE LOCATED AT FIELD PANEL. CONTRACTOR SHALL COORDINATE WITH THE POWER UTILITY IN ORDER TO PROVIDE 480V, 3ø SERVICE TO LIFT STATION. CONTRACTOR SHALL COORDINATE WITH THE OWNER. CONTRACTOR TO INCLUDE ALL REQUIRED MATERIAL AND LABOR INCLUDING METER BASE AND ANY UTILITY FEE, WHICH MAY BE REQUIRED BY THE LOCAL UTILITY FOR THE INSTALLATION OF THE NEW SERVICE. THE CONTRACTOR SHALL INCLUDE A MINIMUM OF 100 FEET OF UNDERGROUND SERVICE FROM THE METER BASE TO THE FPL SERVICE CONNECTION POINT IN THE BASE BID FOR EACH STATION.
6. PROVIDE INTERLOCK SO THAT ONLY ONE CIRCUIT BREAKER (MAIN OR EMERGENCY) CAN BE CLOSED AT A TIME.
7. FIELD PANEL AND CONCRETE SLAB SHALL BE ABLE TO WITHSTAND 140 MPH WIND LOADING: PROVIDE MOUNTING TO SLAB PER MANUFACTURER'S RECOMMENDATIONS.
8. ALL CONDUITS SHALL ENTER THE CONTROL PANEL FROM THE BOTTOM.
9. PROVIDE WIRING METHODS AND MATERIALS SUITABLE FOR A CLASS 1, DIVISION 2 AREA WITHIN ALL HAZARDOUS AREAS. UTILIZE "EYSR" SPLIT CASE FITTING AS MANUFACTURED BY CROUSE-HINDS. IF PVC COATED CONDUITS ARE USED, PEEL OFF THE SECTION WHERE THE SPLIT SEAL GOES, AND AFTER ITS INSTALLED, COAT THE OUTSIDE WITH MANUFACTURERS RECOMMENDED KIT.
10. CONTROL TRASNSFORMER WILL BE STAINLESS STEEL. ALL UNITSTRUT, BOLTS, NUTS, WASHERS, SPRING NUTS, ETC. SHALL BE STAINLESS STEEL. ALL UNISTRUT WILL HAVE PLASTIC BOOTS ON ENDS.
11. TRANSFORMER MUST BE 3R RATED, STAINLESS STEEL AND MOUNTED BY ITSELF (ON THE RACK) OUTSIDE OF ANY ENCLOSURE.
12. FIELD PANEL LOCATIONS ARE TO BE FIELD VERIFIED AND ARE SHOWN FOR CLARITY ONLY.
13. FINAL COMPONENT SIZE AND SELECTION FOR EACH STATION TO BE COORDINATED WITH PUMP SUPPLIER AND SUBJECT TO ACTUAL PUMPS AND MOTORS SELECTED.
14. CONTRACTOR SHALL PROVIDE MINIMUM 24"x24"x8" JUNCTION BOX, NEMA 316 ENCOSURE POWDER COATED WHITE.
15. BURIED CONDUIT SHALL BE PVC SCHEDULE 80. EXPOSED CONDUIT SHALL BE RIGID GALVANIZED STEEL PIPE. (2)

CONDUIT SCHEDULE: (2)

[A] = 2-1/2" CONDUIT W/MANUFACTURER SUPPLIED CABLE (MSC)

[B] = 1-1/4" CONDUIT W/MANUFACTURER SUPPLIED CABLE (MSC)

[C] = 2-1/2" CONDUIT W/ 4#3/0

[D] = 1-1/4" CONDUIT W/2#14

[E] = 1-1/4" CONDUIT W/2#12, 1#12G

[F] = 1-1/4" CONDUIT W/2#12, 1#12G

[G] = 1-1/4" CONDUIT W/2#6, 1#6G

[H] = 1" CONDUIT W/2#14

[J] = 2-1/2" CONDUIT W/3#3/0, 1#4G

[K] = 2-1/2" CONDUIT W/3#8, 1#8EG

[L] = 1" CONDUIT W/2 TSP #16

* FOR CONDUIT MATERIAL REFER TO NOTE 15.

CONNECTED LOAD SUMMARY

	PS-1		
DESCRIPTION	A	KVA	HP
PUMP NO.1	21	11.2	15
PUMP NO.2	21	11.2	15
MISCELLANEOUS	6.25	3	
TOTAL	48.25	25.4	
SERVICE RATING	ADD 25% OF LARGEST MOTOR AT 49 A EQUALS 53.5		

BID SET, NOT FOR CONSTRUCTION

ENGINEER: NOEL RODRIGUEZ, P.E.
REG. No:48300
DATE: 8/6/2019
TEL: 954-761-1073
FAX: 954-987-2949

DRAWN BY: SPH
DATE: 11/27/2018
DESIGNED BY: SPH
SCALE: N/A
CHECKED BY: LMS
FIELD BOOK: XXXX

CITY OF FORT LAUDERDALE
PUBLIC WORKS DEPARTMENT
ENGINEERING & ARCHITECTURE
100 North Andrews Avenue, Fort Lauderdale, Florida 33301

REVISIONS

NO.	DATE	BY	CHK'D	DESCRIPTION
2	8/6/19	NR	DB	ADDENDUM #2

PROJECT # 12390
SEWER DESIGN AND IMPLEMENTATION PROGRAM
PUMP STATION D-38
ELECTRICAL RISER DIAGRAM

SHEET NO. E-3 OF 16
TOTAL: 25
CAD FILE: 43194-E03-DETL
DRAWING FILE NO. 4-XXX-XXX

City of Fort Lauderdale • Procurement Services Division
100 N. Andrews Avenue, 619 • Fort Lauderdale, Florida 33301
954-828-5933 Fax 954-828-5576
purchase@fortlauderdale.gov

RFP 12305-493
PROJECT No. 12390
REPLACEMENT OF PUMP STATION D-38

ADDENDUM NUMBER 3
AUGUST 12, 2019

The following Addendum is **for informational purposes only and is NOT a part of the contract documents:**

Acknowledge receipt of this Addendum by inserting its number and date on the Construction Bid Certification. **All changes are in bold, red italics.**

1. ***ADD*** the attached **ATTACHMENT "A", AS-BUILT DRAWINGS,** in response to Question 14 request for drawings.

All other terms, conditions, and specifications remain unchanged.

Penelope Burger
Procurement Administrator

Company Name: _____
(please print)

Bidder's Signature: _____

Date: _____

ATTACHMENT A - BEST AVAILABLE INFORMATION

CITY OF FORT LAUDERDALE

PROJECT NO. 10259

PUMP STATION D-38 REPLACEMENT

S.E. 25TH AVE. (RIVIERA DRIVE)

THE ATTACHED INFORMATION IS PROVIDED FOR INFORMATIONAL PURPOSES WITH THE CONTRACT DOCUMENTS. THE ATTACHED INFORMATION IS NOT A PART OF THE CONTRACT DOCUMENTS. THE CITY AND THE ENGINEER MAKE NO GUARANTIES, EITHER EXPRESSED OR IMPLIED, AS TO THE ACCURACY OR COMPLETENESS.

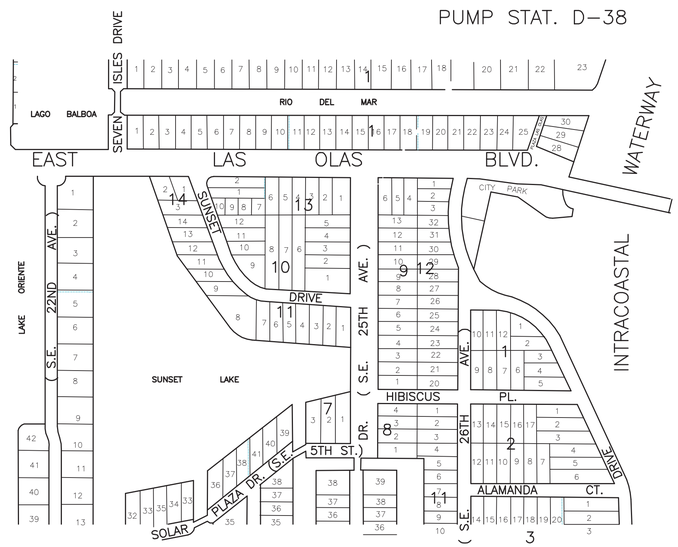

NORTH

LOCATION MAP

NOT TO SCALE

FORT LAUDERDALE CITY COMMISSION

JIM NAUGLE	MAYOR - COMMISSIONER
GLORIA KATZ	COMMISSIONER - DISTRICT I
TIM SMITH	COMMISSIONER - DISTRICT II
CARLTON MOORE	COMMISSIONER - DISTRICT III
CINDI HUTCHINSON	COMMISSIONER - DISTRICT IV

PREPARED IN THE OFFICE OF
THE CITY ENGINEER
under the direct supervision
of _____
PAUL BOHLANDER
FLA. REG. ENG. 36038

4-124-69

GENERAL NOTES:

1. THERE ARE RETIRED SOUTHERNBELL UNDER-GROUND FACILITIES IN THE AREA.
2. IF THERE IS A CONFLICT WITH THE PROPOSED PUMP STATION AND THE ROOTS OF EXISTING CANARY ISLAND DATE PALM, THE CONTRACTOR MAY PRUNE THE ROOTS IN CONFLICT, BUT SHALL MAINTAIN A MIN. DISTANCE OF 10 FEET FROM THE CENTER OF THE TRUNK. ROOTS SHALL BE CLEANLY CUT WHERE PRUNING MUST OCCUR. CONTRACTOR SHALL NOT USE A BACKHOE TO PRUNE ROOTS. ROOTS SHALL BE CUT AS IF TREE WAS BEING ROOTPRUNED UTILIZING METHODS EMPLOYED TROUGH SOUND NURSERY PRACTICE. IF THIS PROCEDURE IS NOT FOLLOWED AND THE TREE SUBSEQUENTLY DIES, THE CONTRACTOR SHALL BE LIABLE FOR THE REPLACEMENT OF THE TREE.
3. FOLLOW PROCEDURE DESCRIBED ABOVE IN GENERAL NOTE 2 TO PRUNE ROOTS. MAINTAIN A MINIMUN DISTANCE OF 5 FEET FROM THE CENTER OF THE TRUNK.

LEGEND

- EXISTING SOUTHERN BELL
- EXISTING FORCEMAIN
- EXISTING WATER MAIN
- EXISTING FPL
- EXISTING GAS LINE
- EXISTING SANITARY SEWER
- EXISTING GRADE
- NEW WATER SERVICE

ALL EXISTING UTILITIES SHOWN ON THESE PLANS ARE TO BE CONSIDERED APPROXIMATE & SHOULD BE VERIFIED BY THE CONTRACTOR PRIOR TO THE START OF WORK OPERATIONS.

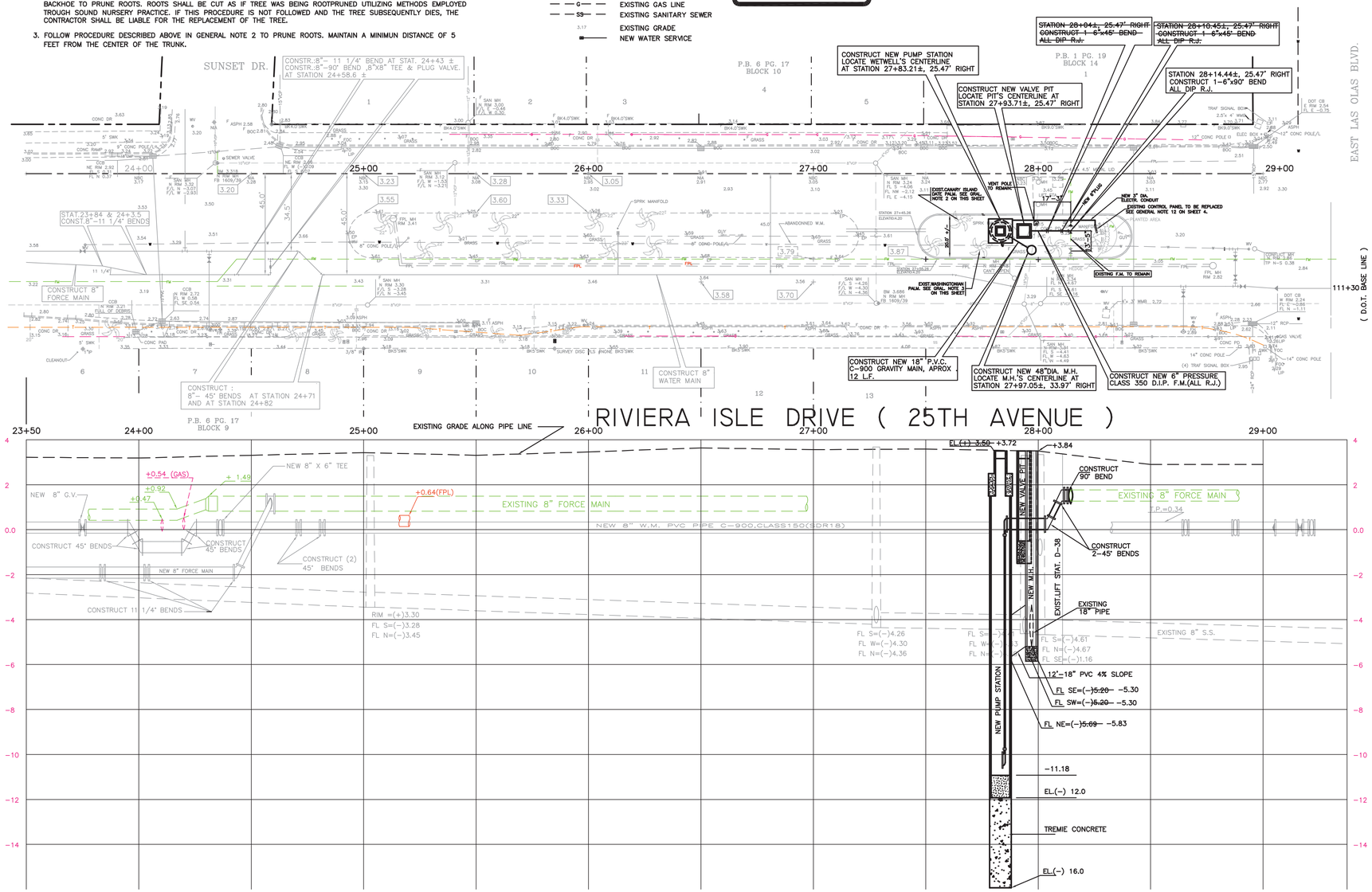

AS BUILT
ALL FIELD INFORMATION
ENTERED BY: A.M.T. DATE: 10/12/01
FIELD BOOK 000 PAGE 00

FINAL APPROVAL
FLA. REG. ENG. NO. 36038

DRAWN BY:	DESIGNED BY:	CHECKED BY:
JB	JB	PB

SCALE: NONE NONE
DATE: 06/15/00
FIELD BOOK: 0000/00–00

CITY OF FORT LAUDERDALE
PUBLIC SERVICES DEPARTMENT
ENGINEERING DIVISION
FORT LAUDERDALE, FLORIDA

REVISIONS

NO.	DATE	BY	CHK'D	DESCRIPTION

PROJECT #10259
PUMP STATION D–38
REPLACEMENT
SE 25TH AVE. (RIVIERA DR.)
FORT LAUDERDALE

NO. OF SHEETS: 5
SHEET NO.: 1
CAD FILE NO. 10259LS1
FILE NO. 4–124–69

xx/xx/9x

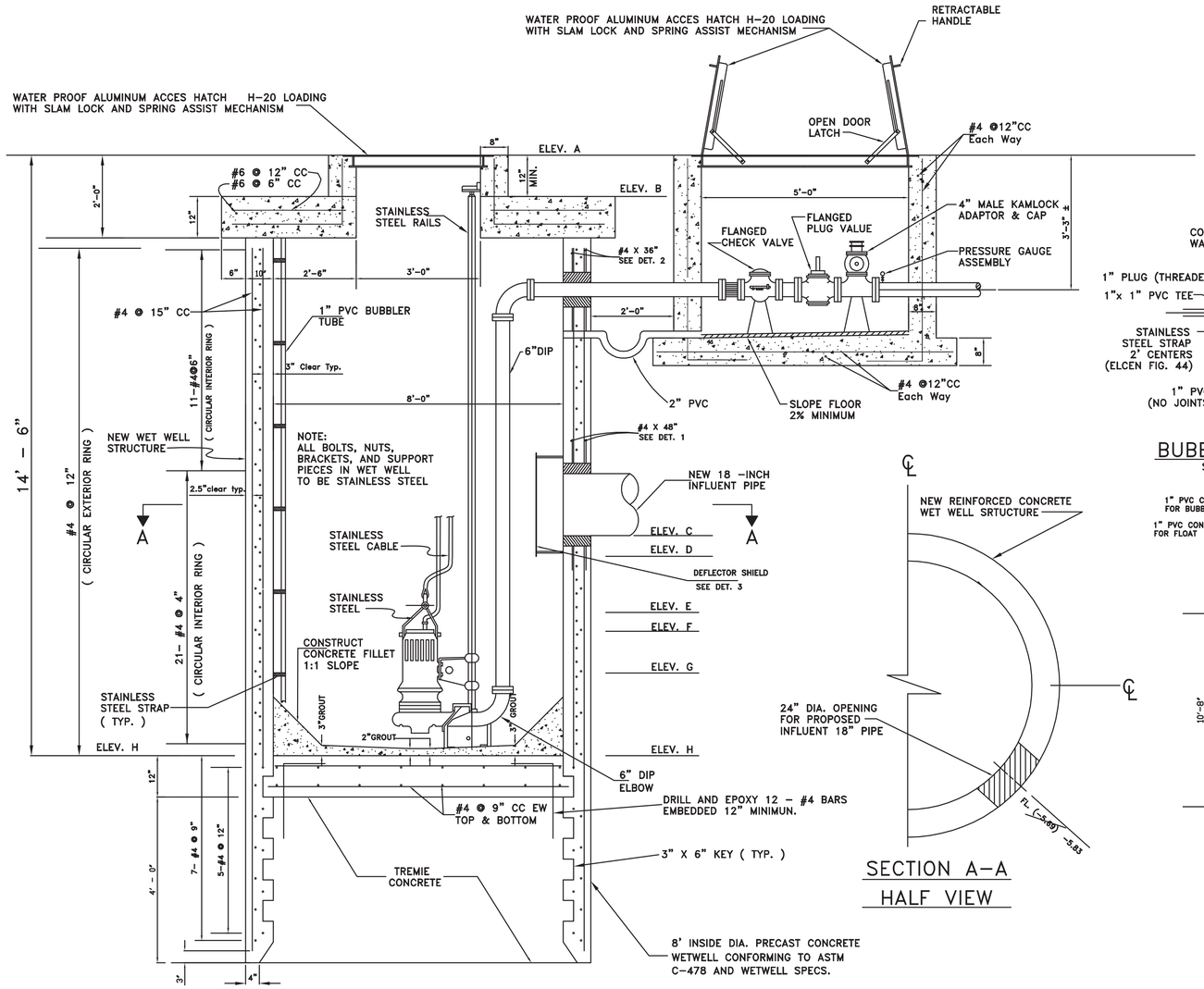

SEWAGE PUMP STATION

SECTION VIEW

SECTION A-A

HALF VIEW

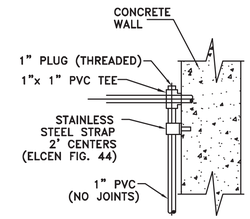

BUBBLER DETAIL

SCALE: NONE

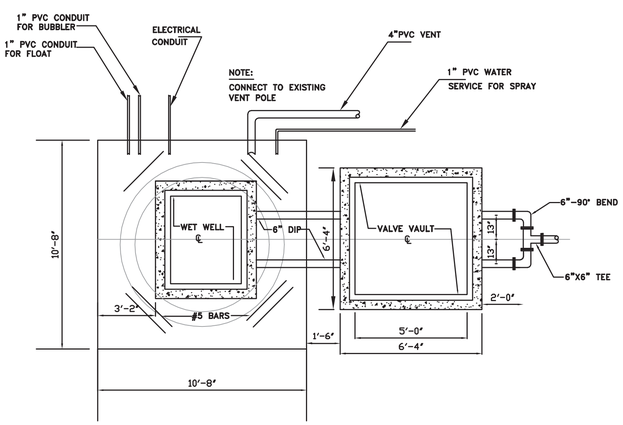

TOP SLAB - PLAN VIEW

PUMP STATION

ELEVATIONS

PUMP STATION D-38	ELEV A	ACCESS HATCH	~~+3.50~~	+3.72
	ELEV B	TOP SLAB	+2.50	
	ELEV C	INFLUENT FLOWLINE	~~(-)5.69~~	+2.72
	ELEV D	ALARM SIGNAL	(-)5.00	
	ELEV E	LAG PUMP ON	(-)6.00	
	ELEV F	LEAD PUMP ON	(-)7.00	
	ELEV G	PUMP OFF	(-)9.00	
	ELEV H	WET WELL FLOOR	~~(-)11.00~~	-11.18

PUMP STATION DATA

PUMP CAPACITY 590 GPM

TOTAL DYNAMIC HEAD 70.8 FT.

NUMBER OF PUMP 2

MOTOR HORSEPOWER 14.8

PUMP IMPELLER SHALL PASS 4" SOLID

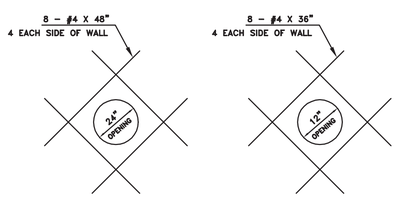

DETAIL 1

DETAIL2

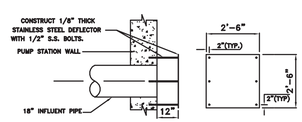

DETAIL 3

(STAINLESS STEEL DEFLECTOR SHIELD)

NOTES:

1. APPLICATION OF A POLYPROPYLENE, RANDOM COPOLYMER (PP-R) PROTECTIVE LINER IS REQUIRED. THE LINER SYSTEM SHALL BE AGRU "SURE GRIP" PP-R CONCRETE PROTECTIVE LINER, OR APPROVED EQUAL POLYPROPYLENE LINING, AS INSTALLED BY U.S. PRECAST CORPORATION, MIAMI, FL.
2. SLOPE CONCRETE FILLET TOWARD PUMP SUCTION PIPE
3. ALL CONCRETE SHALL BE 5,000 PSI AT 28 DAYS WITH AIR ENTRAINMENT AND MINIMUM WEIGHT OF 145 lbs/c.f. .
4. SPLICING LENGTH OF VERTICAL BARS SHALL BE STAGGERED AT LEAST 24-INCHES. CIRCUMFERENCIAL REINFORCEMENT SHALL BE LAPPED AT LEST 30 DIAMETERS. SPLICES IN ADJACENT CIRCULAR STEEL RING MUST BE STAGGERED 3 FT. OR MORE.
5. IF CONTRACTOR CONSTRUCT WET WELL IN SECTIONS, ONE SECTION SHALL BE 8 FEET HEIGHT.
6. WET WELL SHALL BE PLACED USING THE " CAISSON METHOD " OF CONSTRUCTION.
7. CONSTRUCT HOLE FOR 18-INCH IN-COMING GRAVITY PIPE ACCORDING TO THE PLAN AND SECTION SHOWN FOR THE SEWAGE PUMP STATION.
8. THE PUMP(S) USED FOR BY-PASS OPERATION SHALL NOT BE INSTALLED AS THE PERMANENT PUMP(S) IN THE NEW WET WELL.
9. OUTSIDE WALL OF PUMP STATION SHALL BE PAINTED WITH 2 COATS OF AN APPROVED WATERPROOF PROTECTIVE COATING. (ONE COAT RED,ONE COAT BLACK), MINIMUM 8-10 MILS D.F.T. PER COAT.

AS BUILT
ALL FIELD INFORMATION
ENTERED BY: A.M.T. *DATE:* 10/12/01
FIELD BOOK 000 *PAGE* 00

FINAL APPROVAL

FLA. REG. ENG. NO. 36038

DRAWN BY:	SCALE: NONE NONE	DESIGNED BY:	DATE: 06/15/00	CHECKED BY:	FIELD BOOK: 0000/00-00
JB		JB		PB	

CITY OF FORT LAUDERDALE
PUBLIC SERVICES DEPARTMENT
ENGINEERING DIVISION
FORT LAUDERDALE, FLORIDA

REVISIONS

NO.	DATE	BY	CHK'D	DESCRIPTION

PROJECT #10259
PUMP STATION D-38
REPLACEMENT
SE 24TH AVE. (RIVIERA DR.)
FORT LAUDERDALE

NO. OF SHEETS: 5

SHEET NO.: 2

CAD FILE NO. 10259LS2

FILE NO. 4-124-69

xx/xx/9x

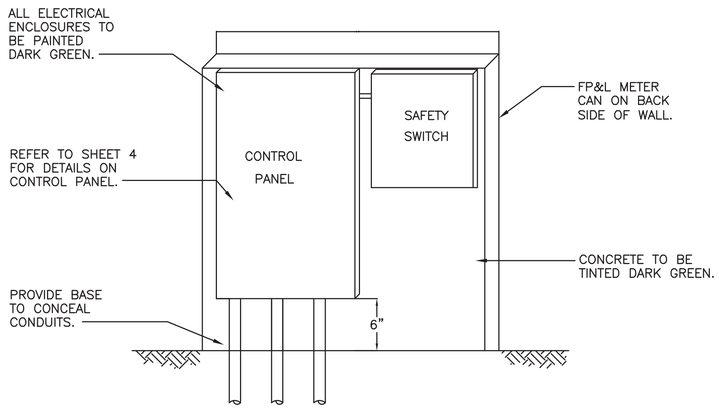

CONTROL PAD

NOT TO SCALE

CONTROL PAD NOTES

1. CONTRACTOR TO PROVIDE WATER SERVICE TO PUMP STATION AND WILL BE RESPONSIBLE FOR METER INSTALLATION CHARGE. CITY PUBLIC SERVICES DEPARTMENT WILL INSTALL WATER METER.
2. CONTRACTOR TO SUPPLY AND INSTALL REDUCED PRESSURE BACKFLOW PREVENTION ASSEMBLY FOR WATER SERVICE__HERSEY PRODUCTS MODEL FRP II OR APPROVED EQUAL.
3. CONTRACTOR SHALL PROVIDE A GROUND ROD AND SHALL ALSO GROUND TO WATER PIPE.
4. GENERATOR RECEPTACLE SHALL BE RATED FOR 200 AMPS, MANUFACTURED BY CROUSE HINDS.

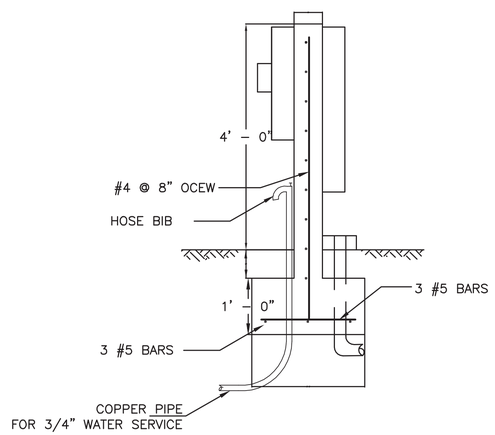

CONTROL PAD

SECTION

NOT TO SCALE

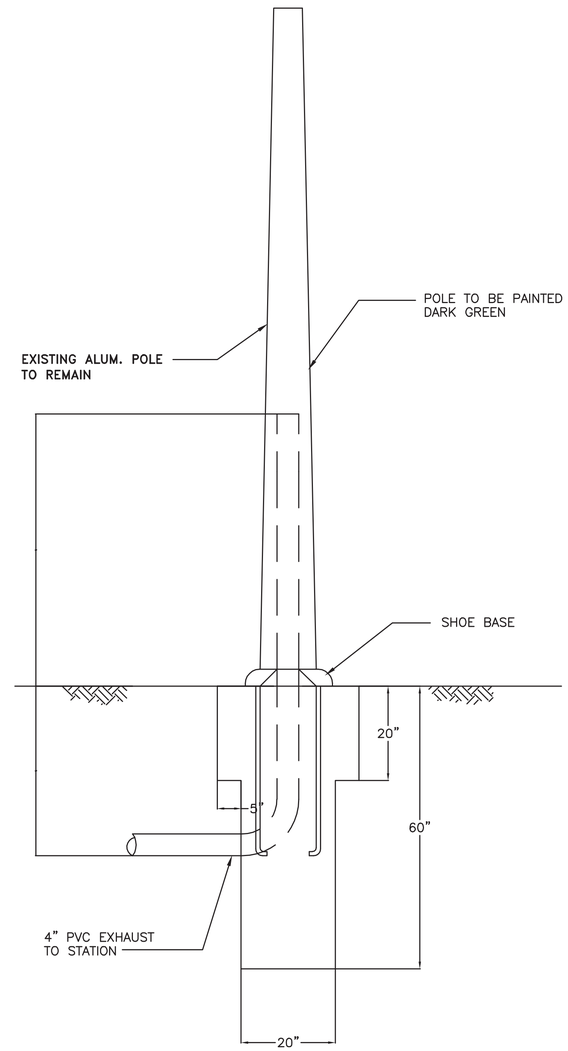

EXHAUST VENT

NOT TO SCALE

MISCELLANEOUS PUMP STATION DETAILS

FINAL APPROVAL

FLA. REG. ENG. NO. 36038

DRAWN BY:	SCALE:
JB	NONE NONE
DESIGNED BY: JB	DATE: 06/15/00
CHECKED BY: PB	FIELD BOOK: 0000/00-00

CITY OF FORT LAUDERDALE
PUBLIC SERVICES DEPARTMENT
ENGINEERING DIVISION
FORT LAUDERDALE, FLORIDA

REVISIONS

NO.	DATE	BY	CHK'D	DESCRIPTION

PROJECT #10259
PUMP STATION D-38
REPLACEMENT
SE 24TH AVE. (RIVIERA DR.)
FORT LAUDERDALE

NO. OF SHEETS: 5

SHEET NO.: 3

CAD FILE NO. 10259LS3

FILE NO. 4-124-69

xx/xx/9x

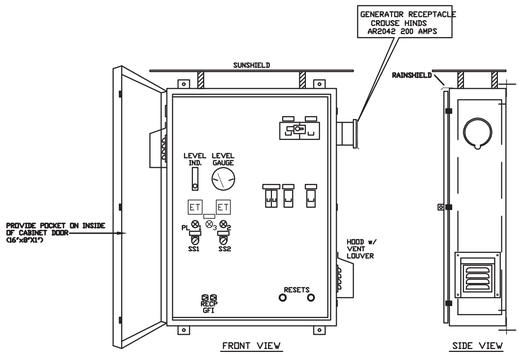

NOTES:
1-ENCLOSURE: NEMA 3R STAINLESS STEEL
2-MATERIAL: 14 GAUGE #304 STN STL.
3-CONSTRUCTION FORMED AND WELDED
4-FINISH: NO. 23 BRUSHED
5-HINGE: CONTINUOUS STAINLESS STEEL
6-GASKET: RUBBER EDGE TYPE
7-LATCHES: STAINLESS STEEL DRAW DOWN TYPE

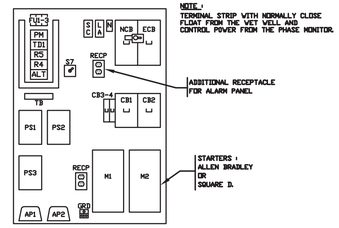

BACKPLATE

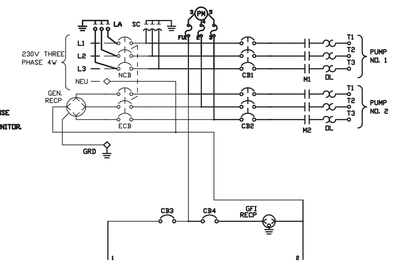

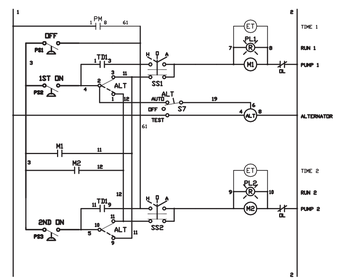

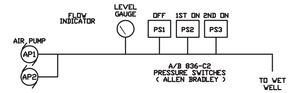

NOTE: CONTROL PANEL SHALL HAVE SPACE PROVIDED FOR FUTURE INSTALLATION OF AN ALARM SYSTEM BY THE CITY. MINIMUM SPACE PROVIDED SHALL BE 12"x12"x5".

TELEMETRIC UNIT TO BE PROVIDED AND INSTALLED BY CITY AT TIME OF START UP.

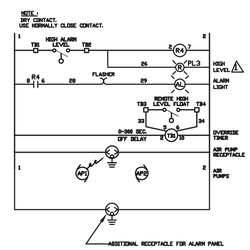

ELECTRICAL NOTES

1. POWER SUPPLY SHALL BE 240V, 3ø, 60 CYCLE FOR NEW D-38 PUMP STATION .
2. THE PUMPING STATIONS SHALL BE COMPLETELY FACTORY WIRED. CONTROL PANELS SHALL BE COMPLETE WITH ALL NECESSARY MOTOR STARTERS, CIRCUIT BREAKERS ETC., FOR COMPLETE OPERATION OF THE STATION.
3. ALL ELECTRICAL DEVICES SHALL BEAR THE LABEL OF APPROVAL OF THE UNDERWRITERS LAB INC., AND SHALL MEET ALL APPLICABLE REQUIREMENTS OF THE N.E.M.A.
4. THE INTERIOR ELECTRICAL SYSTEM SHALL BE COMPLETELY AND EFFECTIVELY GROUNDED AS REQUIRED BY THE N.E.M.A.
5. THE ABOVE GROUND ELECTRICAL INSTALLATION SHALL BE IN ACCORDANCE WITH THE N.E.C. AND SHALL COMPLY WITH ALL LOCAL RULES AND ORDINANCES.
6. ALL ENCLOSURES SHALL BE WATERPROOF N.E.M.A. 3R.
7. ALL CONDUCTORS SHALL BE COPPER, TYPE THW OR THHN.
8. CONTROL PANEL SHALL INCLUDE SURGE PROTECTION.
9. CONTRACTOR SHALL INSTALL UNDERGROUND CONDUIT AND CABLE FROM METER TO FP&L POLE OR PAD-MOUNTED TRANSFORMER. THE CONTRACTOR SHALL PROVIDE ADDITIONAL LENGTH OF CABLE FOR FP&L CONNECTION TO TRANSFORMER. ALL WORK SHALL MEET REQUIREMENTS OF FP&L.
10. CONTRACTOR SHALL PROVIDE 2-FOOT FLUORESCENT LIGHT INSIDE CONTROL PANEL ENCLOSURE WITH SWITCH. LIGHT COULD BE MOUNTED ON TOP OR SIDE OF ENCLOSURE.
11. EXISTING POWER LOAD OF 100 AMPS SHALL BE UPGRADED TO 150 AMPS.THE CONTRACTOR IS RESPONSIBLE TO MAKE SURE THAT FEEDERS ARE OF ADEQUATE AMPACITY.
12. EXISTING CONTROL PANEL AND CIRCUITRY SHALL BE RETURNED TO THE CITY AND HAULED TO A PLACE INDICATED BY THE ENGINEER.

POWER LOAD SERVICE FOR PUMP STATIONS

PUMP STATION	AMPS
D-38	150A

230V SERVICE, THREE PHASE
4 - WIRE.

PUMP STATION ELECTRICAL

FINAL APPROVAL

FLA. REG. ENG. NO. 36038

SCALE: NONE NONE

DRAWN BY: JB

DESIGNED BY: JB

DATE: 06/15/00

CHECKED BY: PB

FIELD BOOK: 0000/00-00

CITY OF FORT LAUDERDALE
PUBLIC SERVICES DEPARTMENT
ENGINEERING DIVISION
FORT LAUDERDALE, FLORIDA

REVISIONS

NO.	DATE	BY	CHK'D	DESCRIPTION

PROJECT #10259
PUMP STATION D-38
REPLACEMENT
SE 24TH AVE. (RIVIERA DR.)
FORT LAUDERDALE

NO. OF SHEETS: 5

SHEET NO.: 4

CAD FILE NO. 10259LS4

FILE NO. 4-124-69

xx/xx/9x

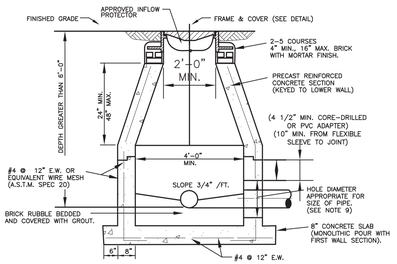

NOTES:

1. PRECAST CONCRETE TYPE II 4000 P.S.I.
2. "RAMNEK" OR EQUAL AT ALL RISER JOINTS (1/2" THICK WITH THE WIDTH AT LEAST 1/2 THE WALL THICKNESS) WITH GROUT ON INSIDE AND OUTSIDE.
3. ALL OPENINGS SHALL BE SEALED WITH A WATERPROOF NON-SHRINKING GROUT.
4. FLOW CHANNELS SHALL BE CONSTRUCTED TO DIRECT INFLUENT INTO FLOW STREAM. (SEE DETAIL)
5. LIFT HOLES ARE PERMITTED.
6. ALL PIPE HOLES SHALL BE PRECAST OR CORE – DRILLED.
7. A. FOR PVC PIPE ENTERING MANHOLE WITH PRECAST HOLES USE THE APPROVED NON-ASBESTOS PVC-MANHOLE ADAPTER OR PRECASTED FLEXIBLE MANHOLE SLEEVE FOR THE APPROPRIATE PIPE DIAMETER AND DIMENSION RATIO. THE ADAPTER SHALL NOT EXTEND MORE THAN 1" INTO THE MANHOLE. DOUBLE BANDING IS REQUIRED FOR FLEXIBLE MANHOLE SLEEVE.
B. CONNECTION TO A MANHOLE WITH A CORE DRILLED HOLE SHALL BE MADE USING A 5" MIN. DUCTILE IRON PIPE SECTION (EPOXY LINED) OR THE APPROVED PVC-MANHOLE ADAPTER.
8.INSIDE DROPS SHALL NOT BE DESIGNED TO EXCEED 1.80 FEET AND NOT CONSTRUCTED TO EXCEED 2.0 FEET. MAX. 6" INSIDE DROP IS PERMITTED FOR MANHOLES WITH 3 OR MORE INVERTS AND MANHOLES WITH A CHANGE IN FLOW DIRECTION OF MORE THAN 45 DEGREES.
9. 8" DIAMETER PIPE: 12" HOLE FOR DIP, 15" HOLE FOR PVC – 10" DIAMETER PIPE: 14" HOLE FOR DIP, 17" HOLE FOR PVC.
10. MANHOLE FABRICATION SHALL BE IN ACCORDANCE WITH ASTM C-478, LATEST STANDARD.
11. MINIMUM 5 FEET IS REQUIRED BETWEEN OUTSIDE OF MANHOLE AND SERVICE WYE.
12. MANHOLES TO BE PAINTED INSIDE AND OUTSIDE WITH 2 COATS OF AN APPROVED PROTECTIVE COATING. (ONE COAT RED, ONE COAT BLACK) – MIN. 8 – 10 MILS D.F.T. PER COAT.
13. APPROVED INFLOW PROTECTORS ARE REQUIRED.

STANDARD MANHOLE

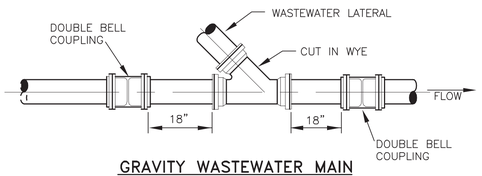

GRAVITY WASTEWATER MAIN

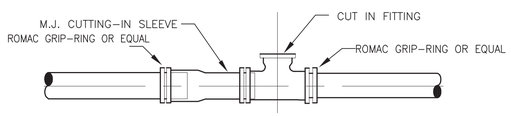

DUCTILE IRON-MECHANICAL JOINT (FORCE MAIN)

1. ROMAC GRIP-RING OR EQUAL ARE REQUIRED THROUGHOUT ASSEMBLY.

WASTEWATER SYSTEM STANDARD CUT-IN DETAILS

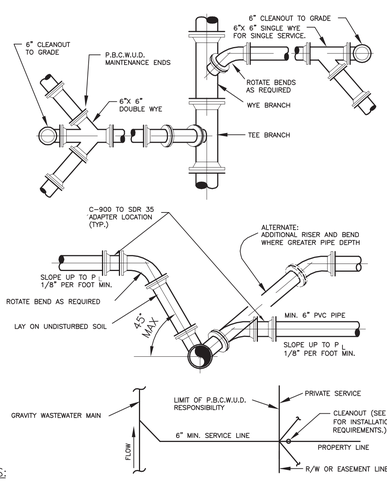

NOTES:

1. SERVICE LATERALS SHALL TERMINATE AT PROPERTY LINE AT A DEPTH OF 3 FEET.
2. CLEANOUT IS TO BE INSTALLED PER DEPARTMENT STANDARDS PRIOR TO WATER METER INSTALLATION. AN INSPECTION OF CONNECTION INTO THE DEPARTMENTS LATERAL IS REQUIRED PRIOR TO WATER METER RELEASE.
3. WASTEWATER MAIN WYE BRANCH TO MATCH MAIN PIPE MATERIAL.
4. NO 90° BENDS SHALL BE USED FOR WASTEWATER SERVICE AND CLEANOUT INSTALLATION.
5. CLEANOUTS DESIGNATING THE END OF THE DEPARTMENT'S MAINTENANCE RESPONSIBILITY SHALL BE LOCATED WITHIN AN UTILITY EASEMENT OR RIGHT-OF WAY DEDICATED FOR UTILITIES.
6. THE DEVELOPER/PROPERTY OWNER OR ASSIGNEE SHALL BE RESPONSIBLE FOR CLEANOUT INSTALLATION PRIOR TO WATER METER INSTALLATION AS SPECIFIED BY THE DEPARTMENT.

TYPICAL WASTEWATER SERVICE CONNECTION

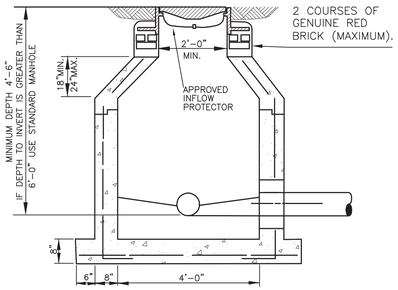

NOTE:

ALL STANDARD MANHOLE NOTES AND DETAILS ARE APPLICABLE

SHALLOW MANHOLE

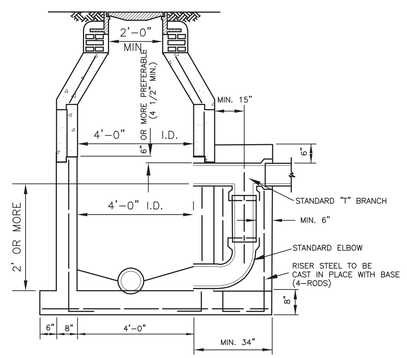

NOTES:

1. ALL DETAILS AND SPECIFICATIONS FOR STANDARD MANHOLES ARE APPLICABLE EXCEPT FOR REFERENCES TO DROP ASSEMBLY.
2. THE PRECAST BASE SHALL EXTEND FULLY UNDER THE DROP ASSEMBLY.
3. MASONRY CONSTRUCTION ABOVE THE EXTENDED PRECAST BASE, IF FILLED WITH CONCRETE, IS PERMISSIBLE.
4. BRICK AND CONCRETE RUBBLE ARE PERMITTED AS FILLER IN DROP ENCASEMENT.
5. DROP CONNECTIONS SHALL BE REQUIRED WHENEVER AN INFLUENT INVERT IS LOCATED 2.0 FEET OR MORE ABOVE THE MAIN INVERT CHANNEL. DROP CONNECTIONS SHOULD NOT BE DESIGNED FOR LESS THAN A 2.4 FOOT DROP.
6. SOLVENT TYPE JOINT PVC FITTINGS MAY BE UTILIZED IN THE DROP ASSEMBLY ONLY.

DROP CONNECTION PRECAST MANHOLE

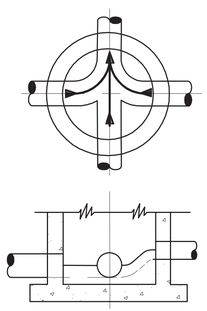

NOTES:

1. ALL INVERT CHANNELS ARE TO BE CONSTRUCTED FOR SMOOTH FLOW WITHOUT OBSTRUCTION.
2. PROPERLY SHAPED SPILLWAYS SHALL BE CONSTRUCTED BETWEEN PIPES WITH DIFFERENT INVERT LEVATIONS TO PROVIDE FOR SMOOTH FLOWS.
3. SERVICE LATERALS SHALL NOT ENTER MANHOLES UNLESS SPECIFIED ON PLANS AND THEN MUST BE TREATED AS MAINS (ELEVATIONS SHOWN, PRECAST HOLE, FLOW CHANNEL)
4. BRICK RUBBLE PERMITTED AS FLOW CHANNEL BUILDUP.
5. SIDEWALLS OF FLOW CHANNEL SHALL BE AT LEAST HALF OF PIPE HEIGHT AT ALL POINTS.
6. NO INSIDE DROP LARGER THAN 6" SHALL BE ALLOWED WITH 3 OR 4 INVERTS AND MANHOLES WITH A CHANGE OF DIRECTION OF FLOW OF MORE THAN 45 DEGREES.

INVERT FLOW CHANNELS

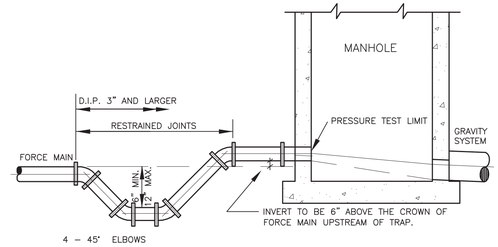

NOTES:

1. FORCE MAIN TO ENTER MANHOLE AS CLOSE AS POSSIBLE TO 180° TO GRAVITY OUTLET.
2. THE INVERT LEVEL OF FORCE MAIN AT POINT OF ENTRY SHALL BE 6" ABOVE INVERT OF MANHOLE.
3. CORE ENTRY ONLY INTO EXISTING MANHOLES.
4. TRAP TO BE LOCATED PRIOR TO DROP INTO MANHOLE AND OUTSIDE OF PAVED AREAS.
5. USE TWO 45° ELBOWS PAST TRAP IF ELEVATION DROP IS REQUIRED TO ENTER MANHOLE.
6. FLOW CHANNEL REQUIRED.
7. MANHOLE AND FLOW CHANNEL TO BE COATED WITH FOSROC LINER OR APPROVED EQUAL.
8. USE ROMAC GRIP-RING OR APPROVED EQUAL TO RESTRAIN TRAP JOINTS.

FORCE MAIN ENTERING MANHOLE

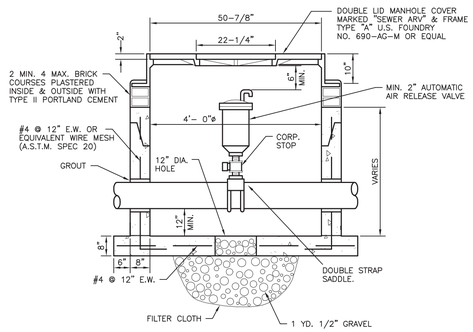

NOTES:

1. PRECAST CONCRETE TYPE # 4000 P.S.I.
2. ALL OPENINGS SHALL BE SEALED WITH A WATERPROOF NON-SHRINKING GROUT.
3. LIFT HOLES ARE PERMITTED.
4. ALL PIPE HOLES SHALL BE PRECAST OR CORE-DRILLED.
5. MANHOLE FABRICATION SHALL BE IN ACCORDANCE WITH A.S.T.M. C-478 LATEST STANDARD.
6. PAINT INSIDE & OUTSIDE WITH 2 COATS OF AN APPROVED PROTECTIVE COATING. (MIN. 10 MIL D.F.T. PER COAT.)
7. CONCRETE COLLAR REQUIRED WHEN MANHOLE IS OUTSIDE PAVEMENT, SEE DETAIL.
8. AIR RELEASE VALVE SHALL BE TYPE AND SIZE APPROPRIATE FOR SERVICE INTENDED (2"MIN.).
9. CONSTRUCTION JOINT AT BASE IS PERMITTED.
10. DUCTILE IRON PIPE IS REQUIRED THROUGH THE MANHOLE
11. THREADED AREAS OF CORPORATION STOP SHALL BE SPIRAL WRAPPED WITH TWO WRAPS OF TEFLON TAPE.

FORCE MAIN AIR RELEASE VALVE AND MANHOLE IN PAVED AREAS AND ROAD R/W

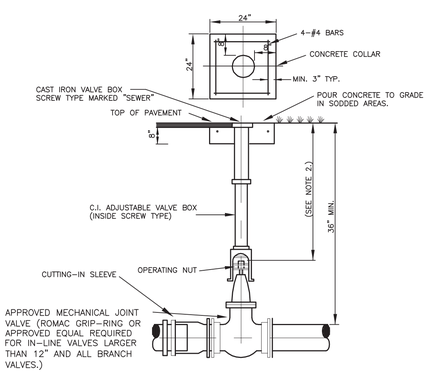

NOTES:

1.CONCRETE COLLAR IS NOT REQUIRED IN PAVED AREAS IF PAVEMENT SURFACE IS FINISHED PRIOR TO CONDITIONAL FINAL INSPECTION.
2. WHEN OPERATING NUT IS DEEPER THAN 36" AN EXTENSION WILL BE REQUIRED TO BRING OPERATING NUT 24"-30" BELOW FINISHED GRADE. EXTENSION BOLTS & NUTS ARE TO BE STAINLESS STEEL. A HIGH STRENGTH STEEL CENTERING PLATE, WELDED TO THE EXTENSION, IS ALSO REQUIRED.
3. VALVE BOXES SHALL HAVE LOCKING COVERS MARKED "SEWER".
4. EXTENSION VALVE BOX TO BE D.I.P.
5. A CUT-IN INSTALLATION SHALL REQUIRE ROMAC GRIP-RING OR EQUAL THROUGHOUT ASSEMBLY.

FORCE MAIN PLUG VALVE SETTING AND CUT-IN DETAIL

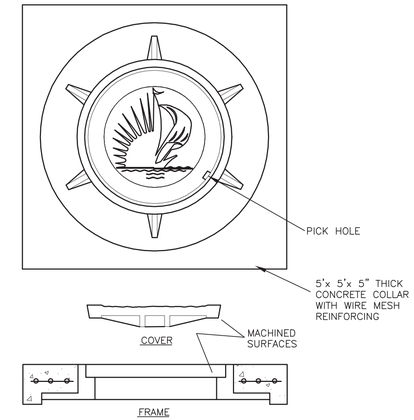

NOTES:

1. COLLAR IS REQUIRED ONLY WHEN MANHOLE IS OUT OF PAVEMENT.
2. FRAME AND COVER SHALL BE U.S. FOUNDRY No. 420A-AK, VULCAN No. 1344 OR APPROVED EQUAL FOR 7" DEPTH FRAME, OR U.S. FOUNDRY No.465A OR EQUAL FOR 4" DEPTH FRAME.
3. A STEEL MANHOLE RISER OR ADDITIONAL BRICKS MAY BE USED TO ELEVATE EXISTING MANHOLE COVERS TO RESURFACED GRADE (MAX. 4" HEIGHT).

SANITARY SEWER MANHOLE FRAME & COVER

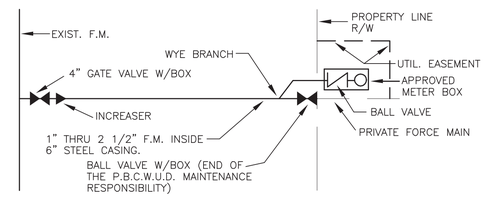

PLAN

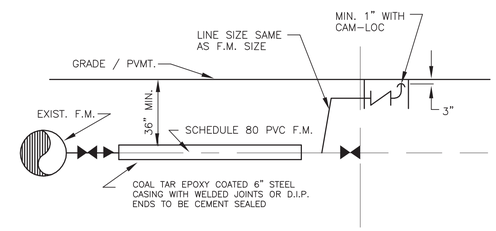

ELEVATION

FORCE MAIN UNDER 3" IN DIAMETER

I. FORCE MAIN OUTSIDE OF WELLFIELD PROTECTION ZONE

MAXIMUM QUANTITY OF WATER (GALLONS PER HOUR) THAT MAY BE SUPPLIED TO MAINTAIN PRESSURE WITHIN 5 P.S.I. OF THE SPECIFIED TEST PRESSURE.

(MECHANICAL OR PUSH-ON JOINT, 18 FT. NOMINAL LENGTHS, PER 1000 FT. OF PIPE)

AVG. TEST PRESSURE	PIPE DIAMETER (INCHES)												
PSI	2	3	4	6	8	10	12	14	16	18	20	24	30
150	0.10	0.14	0.18	0.27	0.37	0.46	0.55	0.64	0.73	0.83	0.92	1.10	1.38

NOTES:

1. TO OBTAIN THE MAXIMUM QUANTITY OF WATER FOR PIPE WITH 20 FT. NOMINAL LENGTHS, MULTIPLY THE QUANTITY CALCULATED FROM THE TABLE BY 0.9
2. THE MAXIMUM QUANTITY OF ADDED WATER FOR A PIPELINE IS CALCULATED BY MULTIPLYING THE QUANTITY PER HOUR AS OBTAINED FROM THE ABOVE TABLE, BY THE DURATION OF THE TEST IN HOURS,AND BY THE TOTAL LENGTH OF THE LINE BEING TESTED DIVIDED BY 1,000. IF THE LINE UNDER TEST CONTAINS SECTIONS OF VARIOUS DIAMETERS, THE MAXIMUM QUANTITY ADDED WILL BE THE SUM OF THE COMPUTED QUANTITIES FOR EACH SIZE.
3. MAXIMUM TEST LENGTH = 2,500 FEET PER SECTION.
4. THIS STANDARD SHALL REFLECT ANY REVISION OF A.W.W.A. C-600. HOWEVER, THE MAXIMUM QUANTITY OF WATER ADDED SHALL NOT EXCEED 50% OF THE RECOMMENDED LIMIT PER APPLICABLE AWWA C-600 STANDARD.
5. STANDARD TEST PRESSURE = 150 P.S.I.
6. FORMULA BASIS: $L = \frac{(S) \times (D) \times (P)^{1/2}}{133,200} \times 1/2$

L = MAXIMUM QUANTITY OF WATER TO BE ADDED (GALLONS PER HOUR)
S = LENGTH OF PIPE TESTED (FEET)
D = DIAMETER OF PIPE (INCHES)
P = TEST PRESSURE (P.S.I.)

7. PRESSURE TEST DURATION TO BE MIN. 2 HOURS.

II. FORCE MAIN AND GRAVITY WASTEWATER MAIN WITHIN WELLFIELD PROTECTION ZONE.

NOTES:

1. PRESSURE TEST PROCEDURE TO FOLLOW THE CURRENT AWWA C-600 STANDARD (150psi, (2) HOUR DURATION).
2. THERE SHALL BE NO PRESSURE DROP IN THE PIPE DURING THE TEST ("ZERO" FILL-UP TOLERANCE).

WASTEWATER PRESSURE TEST CRITERIA

FINAL APPROVAL

FLA. REG. ENG. NO. 36038

DRAWN BY:	SCALE: 1" = 20' 1" = 2'	FINAL APPROVAL
RC		
DESIGNED BY: XXX	DATE: 08/10/00	FLA. REG. ENG. NO. 36038
CHECKED BY: PB	FIELD BOOK: 0000/00-00	

CITY OF FORT LAUDERDALE
PUBLIC SERVICES DEPARTMENT
ENGINEERING DIVISION
FORT LAUDERDALE, FLORIDA

REVISIONS

NO.	DATE	BY	CHK'D	DESCRIPTION
1	10/99	RC	TW	VARIUS CHANGES
2	06/00	RC	TW	REMOVE EXCENTRIC MHS

PROJECT #10259
PUMP STATION D-38
REPLACEMENT
S.E. 25TH AVE. (RIVIERA DR.)
FORT LAUDERDALE

NO. OF SHEETS: 5

SHEET NO.: 5

CAD FILE NO. 10259LS5

FILE NO. 4-124-69

xx/xx/9x

Question and Answers for Bid #12305-493 - Replacement of Pump Station D-38 Project No. 12390

Overall Bid Questions

Question 1

What's the engineer's estimate **(Submitted: Jul 18, 2019 6:10:14 AM EDT)**

Answer

- The engineer estimate is approximately $925,000. **(Answered: Jul 25, 2019 11:38:45 AM EDT)**

Question 2

Please provide model of the US foundry Access Hatches. **(Submitted: Jul 25, 2019 11:20:37 AM EDT)**

Answer

- Design Plans, Sheet C-5, Note 3, specifies that the access hatch shall be U.S. Foundry or approved equal. Design Plans, Sheet C-9, ACCESS HATCH specifications, items 1 thru 13 clearly define what is required. **(Answered: Jul 26, 2019 3:19:34 PM EDT)**

Question 3

when do you anticipate NTP? **(Submitted: Jul 25, 2019 11:44:58 AM EDT)**

Answer

- The City anticipates issuance of an effective NTP within 90 days from the date of bid opening. **(Answered: Jul 26, 2019 3:19:34 PM EDT)**

Question 4

Painting section 09900 refers to section 02770 for wet well lining, no section 02770 is included in the documents.
Please review and issue a submerged concrete lining system **(Submitted: Jul 25, 2019 3:11:28 PM EDT)**

Answer

- Refer to Design Plans Sheet C-9 for notes related to wetwell rehabilitation as well as Painting and Coatings. **(Answered: Jul 26, 2019 3:19:34 PM EDT)**

Question 5

Item No. 13. F&I air release valves. There are 2 included on the bid form but they are not shown on the plans. Please advise location. **(Submitted: Aug 2, 2019 2:51:46 PM EDT)**

Answer

- Provide price to F&I air release valves as specified in Contract Documents. This bid item is included to account for unforeseen field conditions during installation of piping. Air release valves will be field located if required. **(Answered: Aug 7, 2019 3:44:54 PM EDT)**

Question 6

On sheet E-3 the conduit schedule shows conduits to be schedule 80, the specs indicate that exposed conduits to be ridged galvanized conduits, please advise **(Submitted: Aug 5, 2019 8:41:30 AM EDT)**

Answer

- Sheet E-3 will be revised as part of Addendum 2. Buried conduit shall be Schedule 80 PVC and exposed conduit shall be rigid galvanized steel. **(Answered: Aug 7, 2019 8:39:58 AM EDT)**

Question 7

The conduit run from the existing FP&L pole to the new service for the pump station, is this to be directional bore? **(Submitted: Aug 5, 2019 8:42:29 AM EDT)**

Answer

- Means and methods are determined by the contractor. **(Answered: Aug 7, 2019 8:39:58 AM EDT)**

Question 8

Please provide contact for FP&L representative. **(Submitted: Aug 5, 2019 8:43:13 AM EDT)**

Answer

- Bidders are advised to enter all questions into BidSync.
FP&L contact information will be provided to the awarded bidder. **(Answered: Aug 5, 2019 5:21:36 PM EDT)**

Question 9

Please provide underground pull box type shown on E-3 for main service **(Submitted: Aug 5, 2019 8:43:51 AM EDT)**

Answer

- This will be addressed as part of Addendum 2. **(Answered: Aug 7, 2019 8:39:58 AM EDT)**

Question 10

what should contractor use to define the staging area? Fence, walls, etc.? please advise **(Submitted: Aug 8, 2019 12:40:17 PM EDT)**

Answer

- Means and methods are determined by the contractor. **(Answered: Aug 8, 2019 3:31:41 PM EDT)**

Question 11

for installation of the force main, well points and dewatering SE 25th will require closing the south bound lane, are there any MOT requirements or off duty police needed that we should be aware of? **(Submitted: Aug 8, 2019 12:46:10 PM EDT)**

Answer

- Contractor is required to obtain approved MOT plans from the City. MOT plans shall meet the requirements of FDOT Standard Index 600-660 and the City. **(Answered: Aug 8, 2019 3:31:41 PM EDT)**

Question 12

sheet C-6 note 101 provides details for "pavers w/ limestone bast detail" we have not found where pavers would be, please advise where pavers are located. **(Submitted: Aug 8, 2019 12:52:51 PM EDT)**

Answer

- The crosswalk along the south side of Las Olas Blvd. is constructed of pavers. **(Answered: Aug 8, 2019 3:31:41 PM EDT)**

Question 13

Measurement and Payment provisions for Bid Item # 2 "Mobilization and Demobilization" states ... "An initial lump sum payment of 40 % of the Mobilization Pay Item shall be made upon completion of the items # 1 through 9 ...".
Items 1 through 9 includes MOT , Allowances , and Bypass Pumping.
Please explain how the City will make this initial 40 % payment if some of the aforementioned items is not completed. **(Submitted: Aug 9, 2019 4:08:21 PM EDT)**

Answer

- The initial 40% payment of the Mobilization and Demobilization Line item will be made upon the completion of the items # 1 through 9 as outlined in Section 01550 paragraph 1.01. GENERAL, B. **(Answered: Aug 12, 2019 3:59:25 PM EDT)**

Question 14

Drawing C-1 don't show the profile for the existing 8" DIP Force Main to be removed from the vault vault to the existing valve. Please provide as built drawings for this portion of the work. **(Submitted: Aug 9, 2019 4:15:06 PM EDT)**

Answer

- As requested, see Addendum No. 3 **(Answered: Aug 12, 2019 4:41:19 PM EDT)**

Question 15

Please provide detail of how the Odor Control unit is going to be anchored to the proposed reinforced concrete slab between the wet well and valve vault and to the wet well top slab. **(Submitted: Aug 9, 2019 4:33:11 PM EDT)**

Answer

- Concrete anchors for mounting odor unit to concrete slab shall be per manufacturer's recommendation. **(Answered: Aug 12, 2019 3:59:25 PM EDT)**

Question 16

What is the distance to the nearest valve (to the South) on the existing 8" Force Main from the point of connection at Sta 210+85, 12' Rt) ? **(Submitted: Aug 9, 2019 4:49:07 PM EDT)**

Answer

- There is a valve at the intersection of SE 25th Ave and Sunset Drive on the 8Ã¢Â€Â force main. **(Answered: Aug 12, 2019 3:59:25 PM EDT)**

Question 17

Plan sheet c-1 calls out the backflow preventer hose bib to be relocated per sheet C-3. it would appear that the backflow preventer and hose bib are in the same location as they currently are. just want to confirm this will, in fact, be a reconnection rather that a relocation? **(Submitted: Aug 14, 2019 12:27:38 PM EDT)**

Answer

- The existing hose bib and backflow preventer are being relocated at a different angle (rotated) AS ALREADY NOTED ON THE PLANS. **(Answered: Aug 14, 2019 12:29:24 PM EDT)**

Question 18

Plan sheet e-5 detail 5 is a ground test well, where on the plans can we find this? **(Submitted: Aug 14, 2019 12:27:59 PM EDT)**

Answer

- Sheet E-5 also includes Detail 6 Ã¢Â€Â“ Ground Triangle and a detail for the Typical Site Plan. Both of these items reference the ground test well and show the location of where these ground test wells need to be installed. **(Answered: Aug 14, 2019 12:29:24 PM EDT)**