LA LEE YMCA MIZELL COMMUNITY CENTER

1409 NW 6th STREET (SISTRUNK BOULEVARD)
FORT LAUDERDALE, FL. 33311

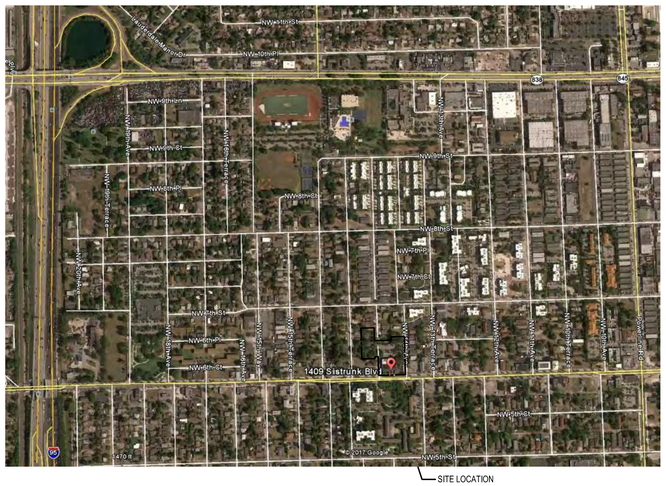

2 AERIAL VIEW
SCALE: N.T.S.

1 LOCATION MAP
SCALE: N.T.S.

FLORIDA ENGINEERING SERVICES
ELECTRICAL, HVAC, PLUMBING, AND FIRE PROTECTION 34 N.W. 168TH STREET
NORTH MIAMI BEACH, FL 33169
T: 305-653-0212 F: 305-653-0232

SAAD ELIA EL-HAGE
STRUCTURAL ENGINEER
5601 NW 9th AVENUE (POWERLINE ROAD), SUITE 206
FORT LAUDERDALE, FLORIDA 33309
T: 954-771-8149 F: 954-771-8169

CALVIN GIORDANO & ASSOC., INC.
CIVIL ENGINEERING AND LANDSCAPING
1800 ELLER DRIVE, SUITE 600
FORT LAUDERDALE, FL 33316
T: 954-921-7781 F: 954-921-8807

SYNALOVSKI ROMANIK SAYE
ARCHITECTURE PLANNING INTERIOR DESIGN
1800 ELLER DRIVE, SUITE 500
FORT LAUDERDALE, FLORIDA 33316
T.954.961.6806 F.954961.6807
WWW.SYNALOVSKI.COM

SynalovskiRomanikSaye
Architecture • Planning • Interior Design
1800 Eller Drive, Suite 500
Fort Lauderdale, FL 33316
T 954.961.6806
F 954.961.6807
www.synalovski.com

Manuel Synalovski, AIA
AR 0011698
SEAL

LICENSE NO. AA26001863

LA LEE YMCA
MIZELL COMMUNITY CENTER
1409 NW 6th STREET (SISTRUNK BOULEVARD)
FORT LAUDERDALE, FL 33311
CLIENT: YMCA SOUTH FLORIDA

REV	DATE	DESCRIPTION

DESIGN DELIVERABLE: 100% GMP BID SET
ISSUE DATE: 04/26/2019

PROJECT NUMBER: 1236-160227
DRAWN BY: CB
CHECKED BY: CB

Copyright (c) by SYNALOVSKI ROMANIK SAYE, LLC
All Rights Reserved.

SHEET TITLE:
COVER SHEET

SHEET NUMBER:
T-001

E:\1236-160227 YMCA Sistrunk\Drawings\T-001.dwg 6/6/2019 10:10:10 AM

the
LA Lee YMCA
Mizell Community Center
STORE
STORE
STORE
STORE
STORE
STORE
STORE
STORE

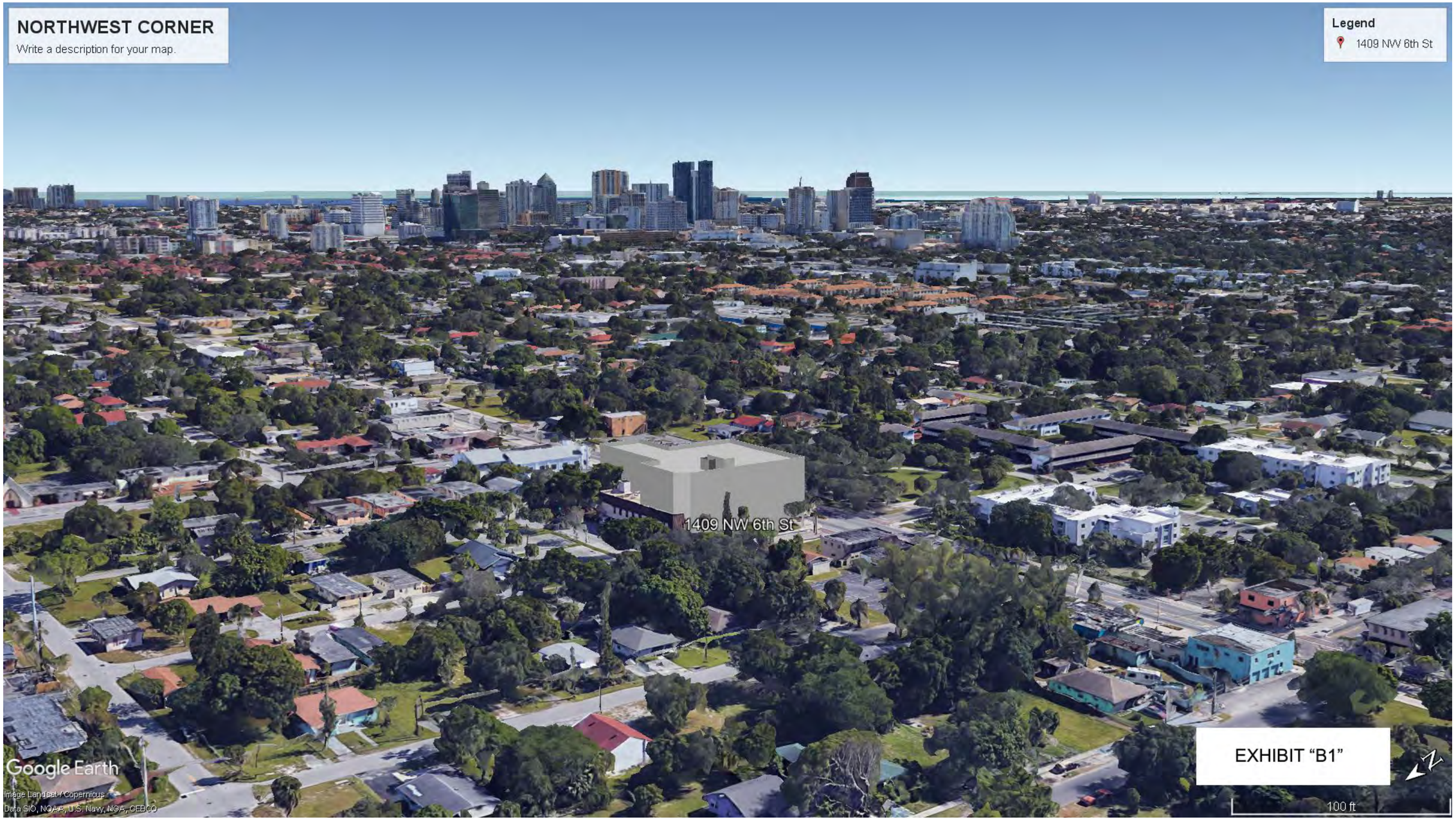
NORTHWEST CORNER
Write a description for your map.
Legend
1409 NW 6th St
1409 NW 6th St
EXHIBIT "B1"
Google Earth
Image Landsat / Copernicus
Data SIO, NOAA, U.S. Navy, NGA, GEBCO
100 ft

SOUTHWEST CORNER
Write a description for your map.
Legend
1409 NW 6th St
1409 NW 6th St
Google Earth
Image Landsat / Copernicus
Data SIO, NOAA, U.S. Navy, NGA, GEBCO
EXHIBIT "B2"
N
100 ft

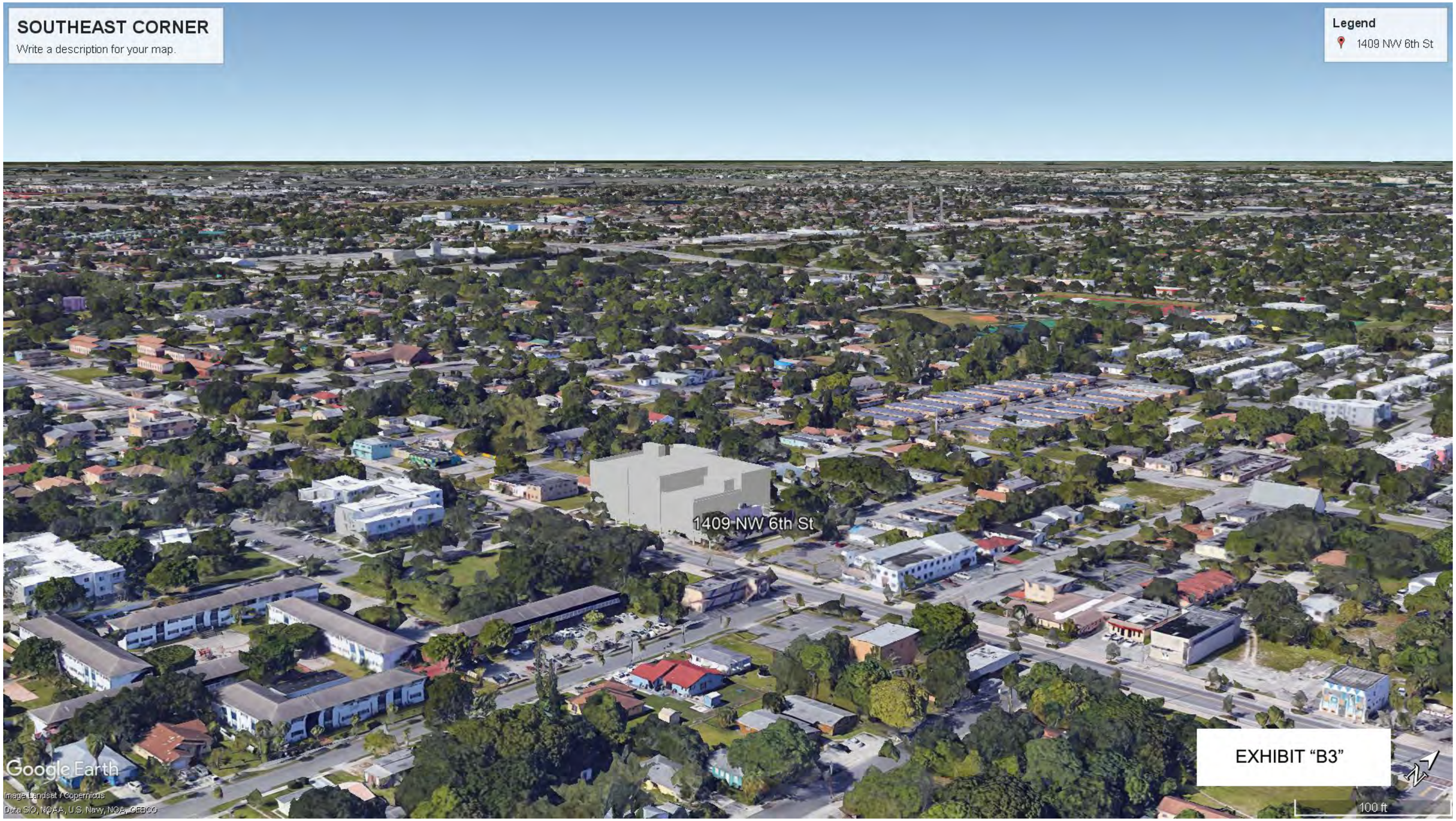
SOUTHEAST CORNER
Write a description for your map.
Legend
1409 NW 6th St
1409 NW 6th St
EXHIBIT "B3"
Google Earth
Image Landsat / Copernicus
Data SIO, NOAA, U.S. Navy, NGA, GEBCO
100 ft

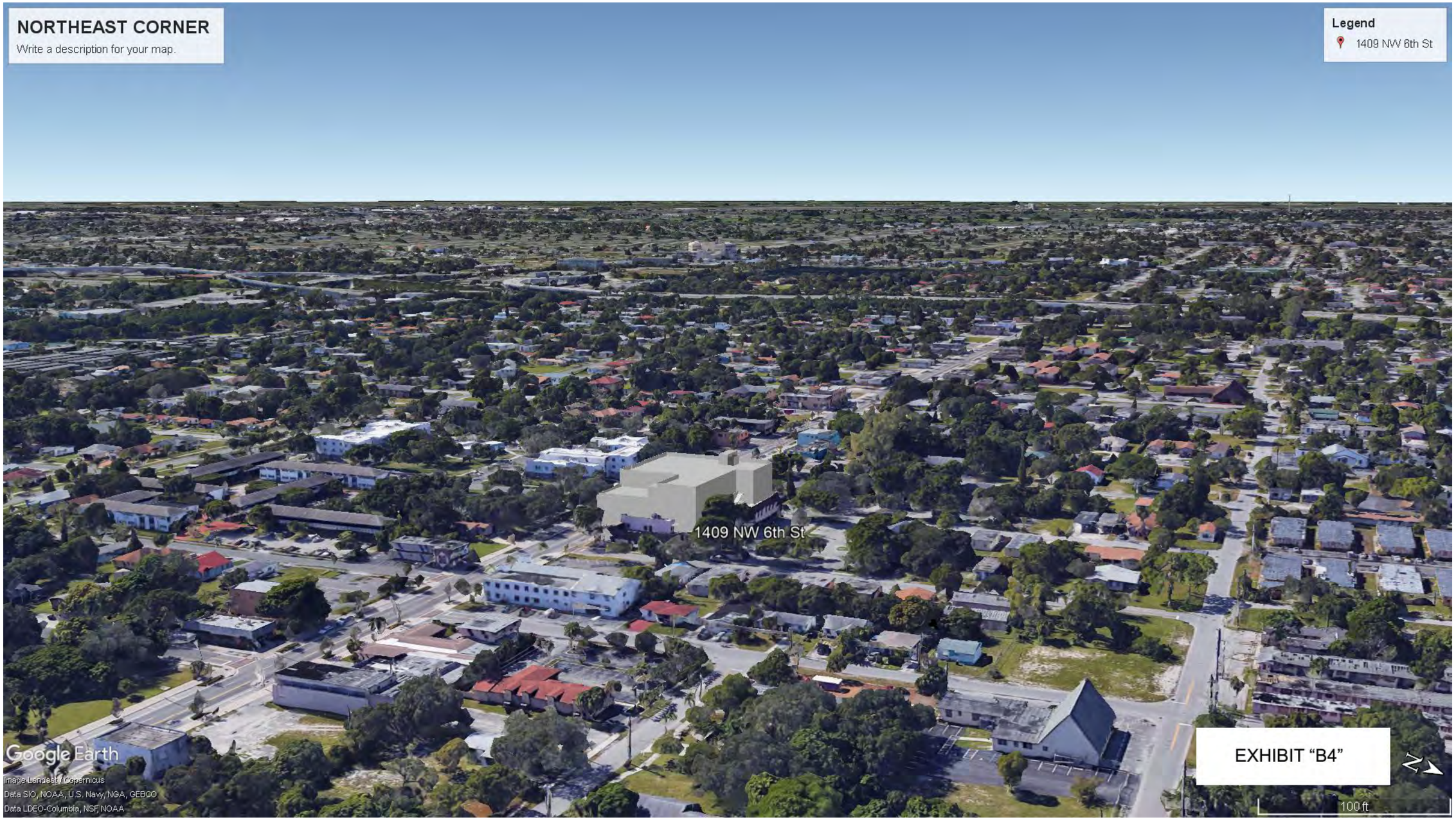
NORTHEAST CORNER
Write a description for your map.
Legend
1409 NW 6th St
1409 NW 6th St
Google Earth
Image Landsat / Copernicus
Data SIO, NOAA, U.S. Navy, NGA, GEBCO
Data LDEO-Columbia, NSF, NOAA
EXHIBIT "B4"
N
100 ft

LEGAL DESCRIPTION

LOTS 1 THROUGH 16, INCLUSIVE, AND LOTS 42 THROUGH 50, INCLUSIVE, OF BLOCK 2 OF LINCOLN PARK, ACCORDING TO THE PLAT THEREOF RECORDED IN PLAT BOOK 5, PAGE 2 OF THE PUBLIC RECORDS OF BROWARD COUNTY, FLORIDA, LESS AND EXCEPT ROAD RIGHT-OF-WAY FOR NW 6TH STREET, LESS AND EXCEPT THE FOLLOWING DESCRIBED PARCEL:

A PORTION OF LOTS 5, 6, 7 AND 8, BLOCK "2", "LINCOLN PARK", ACCORDING TO THE PLAT THEREOF, AS RECORDED IN PLAT BOOK 5, PAGE 2 OF THE PUBLIC RECORDS OF BROWARD COUNTY, FLORIDA; BOUNDED ON THE EAST BY THE EAST LINE OF SAID LOT 5, ON THE SOUTH BY THE NORTH RIGHT-OF-WAY LINE OF SISTRUNK BOULEVARD (NORTHWEST 6TH STREET), A 70 FOOT RIGHT-OF-WAY, AS SHOWN ON THAT CERTAIN RIGHT-OF-WAY MAP FOR PROJECT NUMBER 2423, RIGHT-OF-WAY NUMBER 105, ON FILE IN THE OFFICE OF THE CITY ENGINEER OF FORT LAUDERDALE AT FILE NUMBER 4-
89-57, BOUNDED ON THE WEST BY THE WEST LINE OF SAID LOT 8 AND ON THE NORTH BY A LINE PARALLEL WITH AND 5.00 FEET NORTH OF, AS MEASURED AT RIGHT ANGLES TO SAID NORTH RIGHT-OF-WAY LINE.

TOGETHER WITH THE EASTERLY HALF OF THAT PORTION OF VACATED NORTHWEST 14TH TERRACE, ABUTTING LOTS 12 THROUGH 16, BLOCK 2, LINCOLN PARK, ACCORDING TO THE PLAT THEREOF RECORDED IN PLAT BOOK 5, PAGE 2, AS VACATED BY ORDINANCE NO. C-00-6 RECORDED MARCH 27, 2000 IN O.R. BOOK 30363, PAGE 1209, PUBLIC RECORDS OF BROWARD COUNTY, FLORIDA.

AND

LOTS 39 THROUGH 48, INCLUSIVE, OF BLOCK 3 OF LINCOLN PARK, ACCORDING TO THE PLAT THEREOF RECORDED IN PLAT BOOK 5, PAGE 2 OF THE PUBLIC RECORDS OF BROWARD COUNTY, FLORIDA.

TOGETHER WITH THE WESTERLY HALF OF THAT PORTION OF VACATED NORTHWEST 14TH TERRACE, ABUTTING LOTS 12 THROUGH 16, BLOCK 2, LINCOLN PARK, ACCORDING TO THE PLAT THEREOF RECORDED IN PLAT BOOK 5, PAGE 2, AS VACATED BY ORDINANCE NO. C-00-6 RECORDED MARCH 27, 2000 IN O.R. BOOK 30363, PAGE 1209, PUBLIC RECORDS OF BROWARD COUNTY, FLORIDA.

SAID PARCELS SITUATE WITHIN THE CITY OF FORT LAUDERDALE, BROWARD COUNTY, FLORIDA CONTAINING 84,020 SQUARE FEET (1.929 ACRES) MORE OR LESS.

SURVEY NOTES:

1. THIS SURVEY REFLECTS THE TITLE INSURANCE COMMITMENT PREPARED BY FIRST AMERICAN TITLE INSURANCE COMPANY-5011612-1062-3727281, CUSTOMER REFERENCE NUMBER: CITY OF Ft. LAUDERDALE/YMCA, FIRST AMERICAN FILE NUMBER: 1062-3727281 (REVISED 2-9-2018), EFFECTIVE DATE: FEBRUARY 06, 2018 @ 8:00 A.M.

2. NOT VALID WITHOUT THE SIGNATURE AND ORIGINAL RAISED SEAL OF A FLORIDA PROFESSIONAL SURVEYOR & MAPPER.

3. UNDERGROUND IMPROVEMENTS AND/OR ENCROACHMENTS WERE NOT LOCATED AS PART OF THIS SURVEY TASK.

4. UNLESS OTHERWISE NOTED HEREON, RECORD AND MEASURED VALUES ARE IN SUBSTANTIAL AGREEMENT.

5. THIS SURVEY IS CLASSIFIED AS COMMERCIAL/HIGH RISK AND EXCEEDS THE MINIMUM RELATIVE DISTANCE ACCURACY OF 1 FOOT IN 10,000 FEET AS REQUIRED BY THE STANDARDS OF PRACTICE REQUIREMENTS FOR SURVEYING AND MAPPING IN THE STATE OF FLORIDA (CHAPTER 5J-17.050 THROUGH 5J-17.052 F.A.C.), THE ACCURACY OBTAINED BY MEASUREMENT AND CALCULATION OF A CLOSED GEOMETRIC FIGURE WAS FOUND TO EXCEED THIS REQUIREMENT.

6. THE HORIZONTAL FEATURES SHOWN HEREON ARE PLOTTED TO WITHIN 1/20 OF THE MAP SCALE. THE INTENDED SCALE OF THIS DRAWING IS 1" = 20' OR SMALLER.

7. THE HORIZONTAL AND VERTICAL DATA SHOWN HEREON WERE OBTAINED UTILIZING A "TOPCON ES-105" TOTAL STATION AND "TDS-RANGER" DATA COLLECTION EQUIPMENT AS WELL AS CONVENTIONAL LEVELING METHODS. ALL LOCATIONS AND DATA SHOWN HEREON WERE OBTAINED BY CALVIN GIORDANO AND ASSOCIATES, INC. FOR THE PURPOSE OF THIS SURVEY UNLESS SHOWN AND/OR NOTED OTHERWISE.

8. BEARINGS SHOWN HEREON ARE ASSUMED AND REFERENCED TO THE EAST LINE OF BLOCK 2, LINCOLN PARK", AS RECORDED IN PLAT BOOK 5, PAGE 2, BROWARD COUNTY, PUBLIC RECORDS AND HAVING A BEARING OF SOUTH 02°02'55" EAST.

9. HORIZONTAL FEATURE LOCATION IS TO THE CENTER OF THE SYMBOL WHICH MAY HAVE BE ALTERED FOR CLARITY.

10. THE ELEVATIONS SHOWN HEREON ARE BASED ON NORTH AMERICAN VERTICAL DATUM OF 1988 (NAVD88) AND REFERENCED TO THE CITY OF FORT LAUDERDALE BENCH MARK NUMBER: BM17, ELEVATION= 5.11' (NAVD88), (PUBLISHED AS 6.68' NGVD29); CONVERTED USING CORPSCON VERSION 6.0.1. BEING A PK NAIL IN BRASS DISC STAMPED CITY OF FORT LAUDERDALE NW17, LOCATED AT THE TOP OF CURB NORTHWEST CORNER OF NW 6TH ST. AND NW 14TH AVE.

11. IT IS A VIOLATION OF THE STANDARDS OF PRACTICE, RULE 5J-17 OF THE FLORIDA ADMINISTRATIVE CODE TO ALTER THIS SURVEY WITHOUT THE EXPRESS PRIOR WRITTEN CONSENT OF THE SURVEYOR. ADDITIONS AND/OR DELETIONS MADE TO THE FACE OF THIS SURVEY WILL RENDER IT INVALID.

12. THE HORIZONTAL DATUM FOR THIS SURVEY IS NORTH AMERICAN DATUM OF 1983 WITH THE 2011 ADJUSTMENT APPLIED AND WAS DERIVED BY REDUNDANT MEASUREMENTS VIA REAL TIME KINEMATIC (RTK) GPS OBSERVATIONS AND PROCESSED THROUGH THE TRIMBLE VRS NETWORK. THE RESULTING POSITIONS WERE ALSO CONFORMED THROUGH TOTAL STATION DISTANCE AND ANGLE MEASUREMENTS.

13. THE EXPECTED VERTICAL ACCURACY OF THE HARD SHOT ELEVATIONS IS ±0.03' AND THE SOFT SHOT ELEVATIONS IS ±0.1'

14. THE EXPECTED HORIZONTAL ACCURACY OF THE SURVEY LOCATED FEATURES SHOWN HEREON IS ±0.1'.

15. FLOOD ZONE INFORMATION
FLOOD ZONES: X-0.2% AND AH-6'
COMMUNITY NUMBER: 125105 CITY OF FORT LAUDERDALE
PANEL NUMBER: 0368
MAP NUMBER: 12011C0368H
SUFFIX: H
DATED: 08-18-2014

First American Title Insurance Company-5011612 - 1062-3727281 (Revised 8-8-2017)

Customer Reference Number: City of Ft. Lauderdale / YMCA First American File Number: 1062-3727281 (Revised 8-8-2017-Effective Date: August 03, 2017 @ 8:00 A.M.

ITEM No.	Title Insurance Commitment Part-II Exceptions	RECORDING INSTRUMENT	AFFECTS/DOES NOT AFFECT	PLOTTED/ NOT PLOTTED	COMMENTS
1-8	Standard Exceptions				
9	Reservations contained in Deed from Trustees of the Internal Improvement Fund of the State of Florida, As to Lots 46, 47, 48, 49 and 50, Block 2. Note: The right of entry has been released pursuant to S270.11, F.S.	Deed Book 365, Page 506, B.C.R.	Yes	No	TIIF Reservations
10	Reservations contained in Deed from Trustees of the Internal Improvement Fund of the State of Florida, As to Lots 13, 14, 15, 16, 42 and 45, Block 2. Note: The right of entry has been released pursuant to S270.11, F.S.	Deed Book 459, Page 366, B.C.R.	Yes	No	TIIF Reservations
11	Reservations unto the State of Florida for 200 foot State Road Right of Way as to Lots 43 and 44, Block 3.	Deed Book 394, Page 65, B.C.R.	No	No	TIIF Reservations
12	Reservations unto the State of Florida for 200 foot State Road Right of Way Deed as to Lots 39, 40 and 41, Block 3.	Deed Book 394, Page 211, B.C.R.	No	No	TIIF Reservations
13	Reservations unto the State of Florida for 200 foot State Road Right of Way as to Lots 45, 46 and 47, Block 3.	Deed Book 395, Page 389, B.C.R.	No	No	TIIF Reservations
14	Reservations unto the State of Florida for 200 foot State Road Right of Way as to Lot 48, Block 3.	Deed Book 447, Page 479, B.C.R.	No	No	TIIF Reservations
15	Restrictions, dedications, conditions, reservations, easements and other matters shown on the plat of LINCOLN PARK, as recorded in Plat Book 5, Page(s) 2, but deleting any covenant, condition or restriction indicating a preference, limitation or discrimination based on race, color, religion, sex, handicap, familial status or national origin to the extent such covenants, conditions or restrictions violate 42 USC 3604(c).	Plat Book 5, Page 2, B.C.R.	Yes	Yes	Platted Right-of-Ways
16	Utilities Easement reserved by Ordinance No. C-00-6, recorded March 27, 2000.	O.R. Book, 30363, Page 1209, B.C.R.	Yes	Yes	Vacation of Right-of-Way and creation of utility easement.
17	Mineral and petroleum reservations in an undivided 3/4 interest in all of the phosphate, minerals and metals and an undivided 1/2 interest in all the petroleum that is or may be in, on or under the lands described in Schedule A, automatically reserved by virtue of the conveyance by City of Fort Lauderdale, a municipal corporation of the State of Florida.	Sec. 270.11, F.S.	Yes	No	TIIF Reservations
18	Terms and conditions of any existing unrecorded lease(s), and all rights of lessee(s) and any parties claiming through the lessee(s) under the lease(s).	N/A			Not Addressed, No Documents provided for Review.
19	All of the terms and provisions set forth and contained in that certain Lease between City of Fort Lauderdale, a municipal corporation of the State of Florida, Lessor, and Young Men's Christian Association of South Florida, Inc., a Florida not-for-profit corporation, Lessee, a memorandum of which is recorded in Instrument No. .	N/A			Not Addressed, No Documents provided for Review.

CERTIFIED TO:

FIRST AMERICAN TITLE INSURANCE COMPANY,
SHUTTS & BOWEN LLP AND
THE CITY OF FORT LAUDERDALE

CERTIFICATION

I, MICHAEL M. MOSSEY, DO HEREBY STATE THAT THIS MAP OF BOUNDARY AND TOPOGRAPHIC SURVEY WAS DONE UNDER MY DIRECT SUPERVISION AND IS ACCURATE TO THE BEST OF MY KNOWLEDGE AND BELIEF. I FURTHER STATE THAT THIS MAP OF BOUNDARY AND TOPOGRAPHIC SURVEY WAS COMPLETED IN ACCORDANCE WITH THE STANDARDS OF PRACTICE REQUIREMENTS FOR SURVEYING AND MAPPING AS STATED IN RULE 5J-17 OF THE FLORIDA ADMINISTRATIVE CODE, PURSUANT TO FLORIDA STATUTES CHAPTER 472.027.

LAST DATE OF FIELD SURVEY: FEBRUARY 22, 2018

CALVIN, GIORDANO & ASSOCIATES, INC.

SIGNATURE_____
MICHAEL M. MOSSEY
PROFESSIONAL SURVEYOR AND MAPPER
FLORIDA REGISTRATION NO. 5660

NO	DATE	REVISION	BY	NO	DATE	REVISION	BY
1	2/22/18	REVISE BOUNDARY ADD VACATED RIGHT-OF-WAY	MMM				
1	2/22/18	ADD TITLE COMMITMENT INFORMATION/EXCEPTIONS	MMM				
2	2/28/18	ADD CERTIFICATION					

DESIGNED DATE F.B. 904B
DRAWN DATE 09/21/2017 PD
CHECKED DATE 09/21/2017 MM

Certificate of Authorization 6791

MIZELL CENTER
CITY OF FORT LAUDERDALE, FLORIDA

BOUNDARY & TOPOGRAPHIC SURVEY

SEAL
NOT VALID WITHOUT THE SIGNATURE AND THE ORIGINAL RAISED SEAL OF A FLORIDA LICENSED SURVEYOR & MAPPER
MICHAEL M. MOSSEY
PSM NO. 5660

SCALE N/A
PROJECT No 04-4723
CAD FILE

SHEET: 1 OF 2

File Name: E:\1236-160227 YMCA Sistrunk\Drawings\Project Team\Survey\04-4723-V-BS-TS-Mizell Center-2018_022818.dwg - (Plotted by: Chris Broy on Wednesday, November 14, 2018 4:01:45 PM)

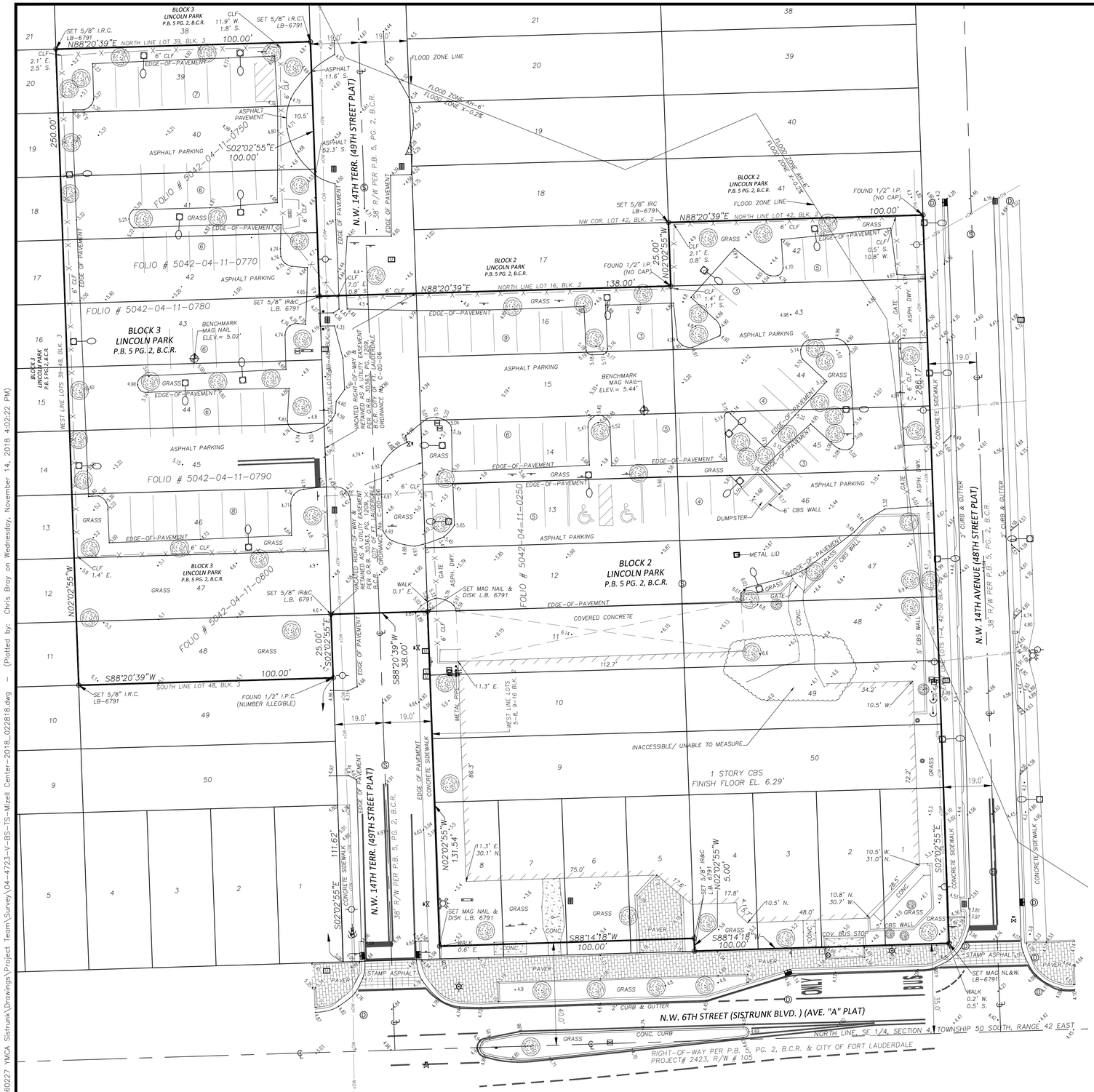

SYMBOL LEGEND

- = BACKFLOW PREVENTOR
- = BENCHMARK
- = BOLLARD
- = CATCH BASIN
- = CLEANOUT
- = CURB INLET
- = DRAINAGE MANHOLE
- = ELECTRIC HANDHOLE
- = ELECTRIC METER\RACK
- = FENCE
- = FIRE HYDRANT
- = FLAG POLE
- = PROPERTY CORNER
- = GUY ANCHOR
- = IRRIGATION VALVE
- = LAMP POST
- = MAILBOX
- = OVERHEAD ELECTRIC
- = SANITARY MANHOLE
- = SIGN
- = TRASH CAN
- = WATER METER
- = WATER VALVE
- = WOOD POWER POLE
- =TYPICAL TREE

ABBREVIATIONS

CONC.	= CONCRETE
D.B.	= DEED BOOK
P.B.	= PLAT BOOK
PG.	= PAGE
B.C.R.	= BROWARD COUNTY RECORDS
LB	= LICENSED BUSINESS
PSM	= PROFESSIONAL SURVEYOR & MAPPER
R/W	= RIGHT-OF-WAY
N&D	= NAIL AND DISK
CBS	= CONCRETE BLOCK W STUCCO
BLDG.	= BUILDING
O.R.B.	= OFFICIAL RECORDS BOOK
NAVD88	= NORTH AMERICAN DATUM OF 1988
CLF	= CHAIN LINK FENCE
TC	= TITLE COMMITMENT
IP	= IRON PIPE
IR	= IRON ROD
IR&C	= IRON ROD & CAP
IP&C	= IRON PIPE & CAP
℄	= CENTERLINE
P.O.B.	= POINT OF BEGINNING
P.O.C.	= POINT OF COMMENCEMENT
COV.	= COVERED
NL&W	=NAIL AND WASHER
ELEV.	= ELEVATION

20 0 10 20 40

(IN FEET)
1 inch = 20 ft.

NO	DATE	REVISION	BY	NO	DATE	REVISION	BY
1	2/22/18	REVISE BOUNDARY ADD VACATED RIGHT-OF-WAY	MMM				
1	2/22/18	ADD TITLE COMMITMENT INFORMATION/EXCEPTIONS	MMM				
2	2/28/18	ADD CERTIFICATION					

DESIGNED DATE F.B. 904B
DRAWN DATE 09/21/2017 PD
CHECKED DATE 09/21/2017 MM

Certificate of Authorization 6791

MIZELL CENTER
CITY OF FORT LAUDERDALE, FLORIDA

BOUNDARY & TOPOGRAPHIC SURVEY

SEAL
NOT VALID WITHOUT THE SIGNATURE AND THE ORIGINAL RAISED SEAL OF A FLORIDA LICENSED SURVEYOR & MAPPER

MICHAEL M. MOSSEY
PSM NO. 5660

SCALE 1" = 20'
PROJECT No 04-4723
CAD FILE

SHEET: 2 OF 2

File Name: E:\1236-160227 YMCA Sistrunk\Drawings\Project Team\Survey\04-4723-V-BS-TS-Mizell Center-2018_022818.dwg - (Plotted by: Chris Bray on Wednesday, November 14, 2018 4:02:22 PM)

LEGAL DESCRIPTION:

Lots 1 through 16, inclusive, and Lots 42 through 50, inclusive, of Block 2 of LINCOLN PARK, according to the plat thereof recorded in Plat Book 5, Page 2 of the Public Records of Broward County, Florida, Less and Except road right-of-way for NW 6th Street, Less and Except the following described parcel.

A portion of Lots 5, 6, 7 and 8, Block "2", "LINCOLN PARK", according to the plat thereof, as recorded in Plat Book 5, Page 2 of the Public Records of Broward County, Florida; bounded on the east by the east line of said Lot 5, on the south by the north right-of-way line of Sistrunck Boulevard (Northwest 6th Street), a 70 foot right-of-way, as shown on that certain right-of-way map for Project Number 2423, Right-of-Way Number 105, on file in the office of the City Engineer of Fort Lauderdale at File Number 4-89-57, bounded on the west by the west line of said Lot 8 and on the north by a line parallel with and 5.00 feet north of, as measured at right angles, said north right-of-way line.

Together with the easterly half of that portion of vacated Northwest 14th Terrace, abutting Lots 12 through 16, Block 2, LINCOLN PARK, according to the plat thereof recorded in Plat Book 5, Page 2, as vacated by Ordinance No. C-00-6 recorded March 27, 2000 in O.R. Book 30363, Page 1209, Public Records of Broward County, Florida.

And

Lots 39 through 48, inclusive, of Block 3 of LINCOLN PARK, according to the plat thereof recorded in Plat Book 5, Page 2 of the Public Records of Broward County, Florida.

Together with the westerly half of that portion of vacated Northwest 14th Terrace, abutting Lots 12 through16, Block 2, LINCOLN PARK, according to the plat thereof recorded in Plat Book 5, Page 2, as vacated by Ordinance No. C-00-6 recorded March 27, 2000 in O.R. Book 30363, Page 1209, Public Records of Broward County, Florida.

5 LEGAL DESCRIPTION

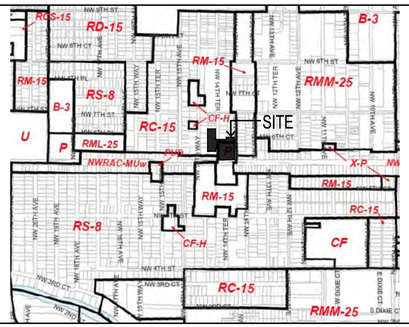

4 ZONING DESIGNATION OF ADJACENT PROPERTIES

N.T.S.

SITE INFORMATION:

CURRENT LAND USE DESIGNATION:	ACTIVITY CENTER
PROPOSED LAND USE DESIGNATION:	ACTIVITY CENTER
CURRENT ZONING DESIGNATION:	P - PARKS RECREATION & OPEN SPACE
PROPOSED ZONING DESIGNATION:	P - PARKS RECREATION & OPEN SPACE
CURRENT USE OF PROPERTY:	COMMUNITY CENTER
NUMBER OF RESIDENTIAL UNITS:	N/A
NON-RESIDENTIAL SF (AND TYPE):	71,737 SF
TOTAL BUILDING SF:	71,737 SF
SITE ADJACENT TO WATERWAY:	NO

UTILITIES:

WATER & SEWER:	CITY OF FORT LAUDERDALE
STORM WATER:	CITY OF FORT LAUDERDALE
ELECTRIC:	FLORIDA POWER & LIGHT CO.

SITE CALCULATIONS:

	REQUIRED	PROPOSED
LOT SIZE (SF / ACREAGE):	NONE	84,570 SF (1.94 ACRES)
LOT DENSITY:	N/A	N/A
LOT WIDTH:	NONE	338'-0"
BUILDING HEIGHT (FEET / LEVELS):	60'-0" (MAX.)	58'-9 1/2"
STRUCTURE LENGTH:	-	185'-0"
FLOOR AREA RATIO:	NONE	0.261
LOT COVERAGE:	-	22,084 SF (26.1%)
OPEN SPACE:	-	15,210 SF (18.0%)
LANDSCAPE AREA:	3	13,712 SF (16.2%)
PARKING SPACES:	76 (*)	33,564 SF (39.7%) 80 PARKING SPACES
LOADING ZONE, 47-20.2 MULTI-TENANT COMMERCIAL:	1 TYPE II	N/A - PUBLIC PURPOSE USE RELIEF

(*) - SEE NON-CONCURRENT PARKING MATRIX (REFER TO 11/AS-103).

REQUIRED SETBACKS:		PROPOSED SETBACKS:	
FRONT (S) SETBACK	= 25'-0"	FRONT (S) SETBACK	= 1'-0"
SIDE (E) SETBACK	= 25'-0"	SIDE (E) SETBACK	= 8'-0"
SIDE (W) SETBACK	= 25'-0"	SIDE (W) SETBACK	= 7'-0"
REAR (N) SETBACK	= 25'-0"	REAR (N) SETBACK	= 126'-10 1/2"

3 SITE DATA INFORMATION

NOTE:
DUMPSTER ENCLOSURE SHALL COMPLY WITH CITY OF FORT LAUDERDALE UNIFIED LAND DEVELOPMENT CODE, SECTION 47-19.4

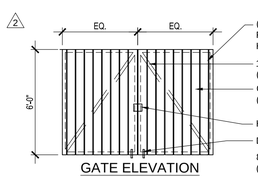

GATE ELEVATION
SCALE: 1/4" = 1'-0"

(2) 6'-0"H STEEL FRAMED METAL FACED GATES, WELD (3) DOOR HINGES EA. SIDE TO BOLLARD
1 1/2" SQUARE STEEL TUBE FRAME (PRIMED & PAINTED)
CORRUGATED GALV. METAL PANELS (PRIMED & PAINTED)
HASP LATCH
DROP BOLT (TYP. EA. SIDE)

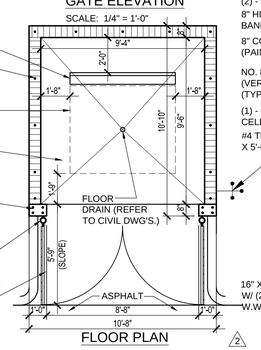

FLOOR PLAN
SCALE: 1/4" = 1'-0"

6'-0" LONG PRE-CAST CONC. WHEEL STOP. PROVIDE (2) - #4 BARS 36" LONG CONNECT TO 6" SLAB
(1) - #5 VERT. IN CONC. FILLED CELL @ CORNERS AND 32" O.C.
DASHED LINE INDICATES 6 YARD DUMPSTER (N.I.C.)
6" THICK (4,000 psi) CONC. SLAB W/ 6X6 W1.4 X W1.4 W.W.F. ON WELL COMPACTED CLEAN FILL
8" X 12" CONC. COLUMN W/ (4) - #5 BARS (VERT.) & #3 HOOPS @ 12" O.C. (TYP. EA. SIDE OF OPENING)
4" DIA. X 9'-0" LONG PAINTED GALV. STEEL POST SET IN 3'-6" DEEP X 12" DIA. CONC. FOOTING (6'-0" ABOVE GRADE, CONCRETE FILLED TYP. EA. SIDE)
SLOPE CONCRETE SLAB FLUSH WITH ASPHALT PAVEMENT (REFER TO CIVIL DRAWINGS)
ASPHALT

NOTE:
DUMPSTER ENCLOSURE (UNDER SEPERATE PERMIT)

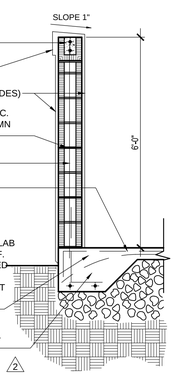

SECTION
SCALE: 1/2" = 1'-0"

8" X 8" BOND BEAM W/ (2) - #5 BAR CONT. (TYP.)
8" HIGH RAISED SMOOTH STUCCO BANDING AT FULL PERIMETER
8" CONCRETE BLOCK W/ SMOOTH (PAINTED) STUCCO FINISH (BOTH SIDES)
NO. 8 LADDER TYPE REINF. @ 16" O.C. (VERTICAL) - EXTEND 4" INTO COLUMN (TYPICAL)
(1) - #5 VERT. IN CONC. FILLED CELL @ CORNERS AND 32" O.C.
#4 TRANSVERSE TOP HOOK BAR X 5'-0" LONG AT 12" O.C. (TYPICAL)
VANDAL RESISTANT HOSE BIBB (REFER TO PLUMBING DRAWINGS)
6" THICK (4,000 psi) CONC. SLAB WITH 6X6 W1.4 X W1.4 W.W.F. ON CLEAN WELL COMPACTED FILL. PLACE W.W.F. @ MID-DEPTH OF SLAB. TOP AT SLAB AT 6" ABOVE ASPHALT PAVEMENT.
16" X 16" CONT. CONC. FOOTING W/ (2) - #5 CONT. W/ 6X6 W1.4 X W1.4 W.W.F. (DBL. 30" W.W.F. @ EDGES)

2 DUMPSTER DETAILS

SCALE: AS SHOWN

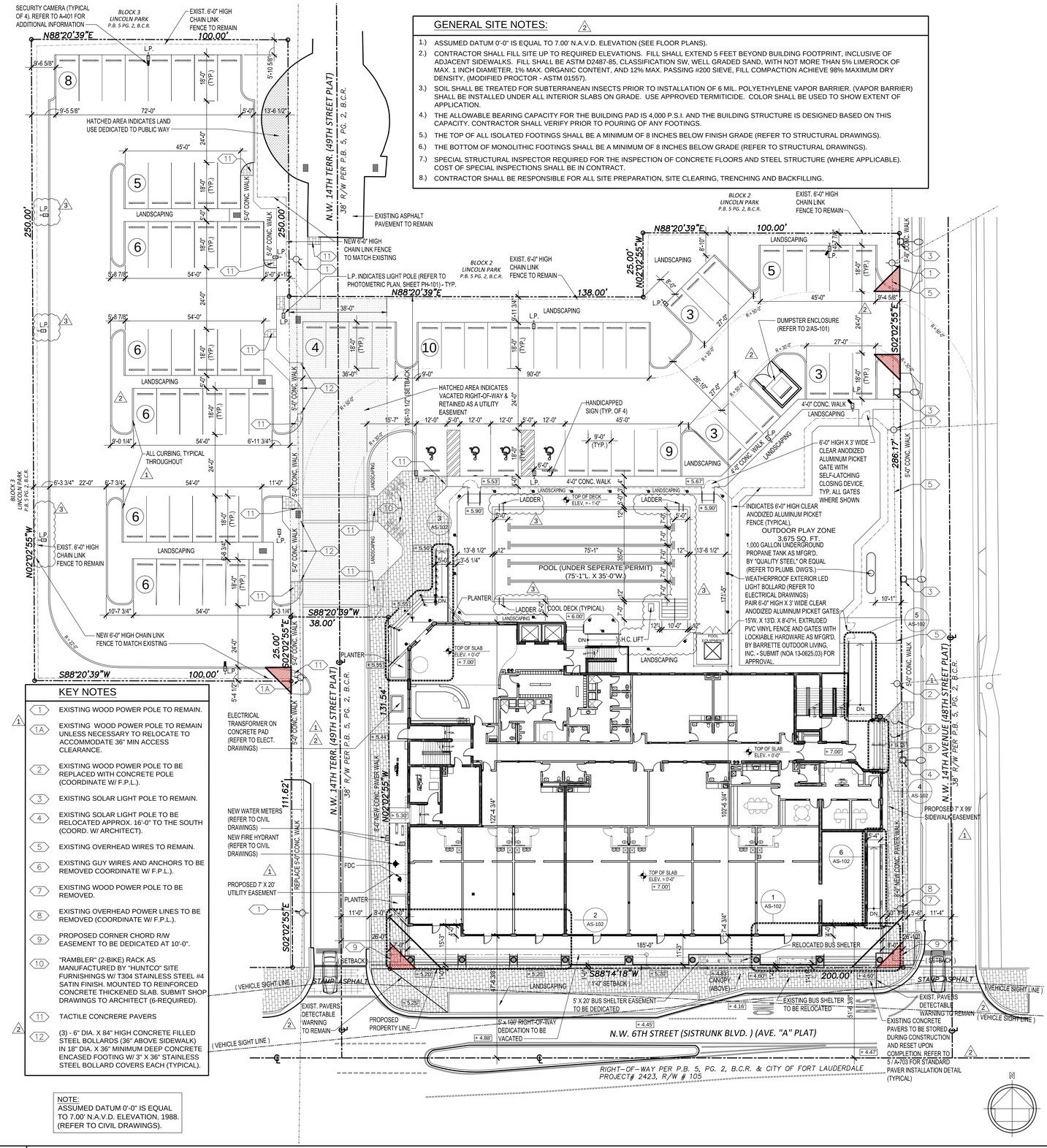

GENERAL SITE NOTES:

2

1.) ASSUMED DATUM 0'-0" IS EQUAL TO 7.00' N.A.V.D. ELEVATION (SEE FLOOR PLANS).
2.) CONTRACTOR SHALL FILL SITE UP TO REQUIRED ELEVATIONS. FILL SHALL EXTEND 5 FEET BEYOND BUILDING FOOTPRINT, INCLUSIVE OF ADJACENT SIDEWALKS. FILL SHALL BE ASTM D2487-85, CLASSIFICATION SW, WELL GRADED SAND, WITH NOT MORE THAN 5% LIMEROCK OF MAX. 1 INCH DIAMETER, 1% MAX. ORGANIC CONTENT, AND 12% MAX. PASSING #200 SIEVE, FILL COMPACTION ACHIEVE 98% MAXIMUM DRY DENSITY, (MODIFIED PROCTOR - ASTM 01557).
3.) SOIL SHALL BE TREATED FOR SUBTERRANEAN INSECTS PRIOR TO INSTALLATION OF 6 MIL. POLYETHYLENE VAPOR BARRIER. (VAPOR BARRIER) SHALL BE INSTALLED UNDER ALL INTERIOR SLABS ON GRADE. USE APPROVED TERMITICIDE. COLOR SHALL BE USED TO SHOW EXTENT OF APPLICATION.
4.) THE ALLOWABLE BEARING CAPACITY FOR THE BUILDING PAD IS 4,000 P.S.I. AND THE BUILDING STRUCTURE IS DESIGNED BASED ON THIS CAPACITY. CONTRACTOR SHALL VERIFY PRIOR TO POURING OF ANY FOOTINGS.
5.) THE TOP OF ALL ISOLATED FOOTINGS SHALL BE A MINIMUM OF 8 INCHES BELOW FINISH GRADE (REFER TO STRUCTURAL DRAWINGS).
6.) THE BOTTOM OF MONOLITHIC FOOTINGS SHALL BE A MINIMUM OF 8 INCHES BELOW GRADE (REFER TO STRUCTURAL DRAWINGS).
7.) SPECIAL STRUCTURAL INSPECTOR REQUIRED FOR THE INSPECTION OF CONCRETE FLOORS AND STEEL STRUCTURE (WHERE APPLICABLE). COST OF SPECIAL INSPECTIONS SHALL BE IN CONTRACT.
8.) CONTRACTOR SHALL BE RESPONSIBLE FOR ALL SITE PREPARATION, SITE CLEARING, TRENCHING AND BACKFILLING.

KEY NOTES

1 EXISTING WOOD POWER POLE TO REMAIN.
1A EXISTING WOOD POWER POLE TO REMAIN UNLESS NECESSARY TO RELOCATE TO ACCOMMODATE 36" MIN ACCESS CLEARANCE.
2 EXISTING WOOD POWER POLE TO BE REPLACED WITH CONCRETE POLE (COORDINATE W/ F.P.L.).
3 EXISTING SOLAR LIGHT POLE TO REMAIN.
4 EXISTING SOLAR LIGHT POLE TO BE RELOCATED APPROX. 16'-0" TO THE SOUTH (COORD. W/ ARCHITECT).
5 EXISTING OVERHEAD WIRES TO REMAIN.
6 EXISTING GUY WIRES AND ANCHORS TO BE REMOVED COORDINATE W/ F.P.L.).
7 EXISTING WOOD POWER POLE TO BE REMOVED.
8 EXISTING OVERHEAD POWER LINES TO BE REMOVED (COORDINATE W/ F.P.L.).
9 PROPOSED CORNER CHORD R/W EASEMENT TO BE DEDICATED AT 10'-0".
10 "RAMBLER" (2-BIKE) RACK AS MANUFACTURED BY "HUNTCO" SITE FURNISHINGS W/ T304 STAINLESS STEEL #4 SATIN FINISH. MOUNTED TO REINFORCED CONCRETE THICKENED SLAB. SUBMIT SHOP DRAWINGS TO ARCHITECT (6-REQUIRED).
11 TACTILE CONCRERE PAVERS
12 (3) - 6" DIA. X 84" HIGH CONCRETE FILLED STEEL BOLLARDS (36" ABOVE SIDEWALK) IN 18" DIA. X 36" MINIMUM DEEP CONCRETE ENCASED FOOTING W/ 3" X 36" STAINLESS STEEL BOLLARD COVERS EACH (TYPICAL).

NOTE:
ASSUMED DATUM 0'-0" IS EQUAL TO 7.00' N.A.V.D. ELEVATION, 1988. (REFER TO CIVIL DRAWINGS).

1 ARCHITECTURAL SITE PLAN

SCALE: 1" = 20'-0"

SYNALOVSKI ROMANIK SAYE
Architecture • Planning • Interior Design
1800 Eller Drive, Suite 500
Fort Lauderdale, FL 33316
T 954.961.6806
F 954.961.6807
www.synalovski.com
Manuel Synalovski, AIA
AR 0011698
SEAL
LICENSE NO. AA26001863

LA LEE YMCA MIZELL COMMUNITY CENTER

1409 NW 6th STREET (SISTRUNK BOULEVARD)
FORT LAUDERDALE, FL 33311

CLIENT: YMCA SOUTH FLORIDA

REV	DATE	DESCRIPTION
1	05/10/19	DBC SIGN-OFF
2	05/22/19	ENGINERING
3	05/24/19	CORRECTION

DESIGN DELIVERABLE: 100% GMP BID SET
ISSUE DATE: 04/26/2019

PROJECT NUMBER: 1236-160227
DRAWN BY: CB
CHECKED BY: MS

Copyright (c) by SYNALOVSKI ROMANIK SAYE, LLC
All Rights Reserved.

SHEET TITLE:
ARCHITECTURAL SITE PLAN

SHEET NUMBER:
AS-101

E:\1236-160227 YMCA Sistrunk\Drawings\AS-101.dwg 8/10/2019 11:34:02 AM

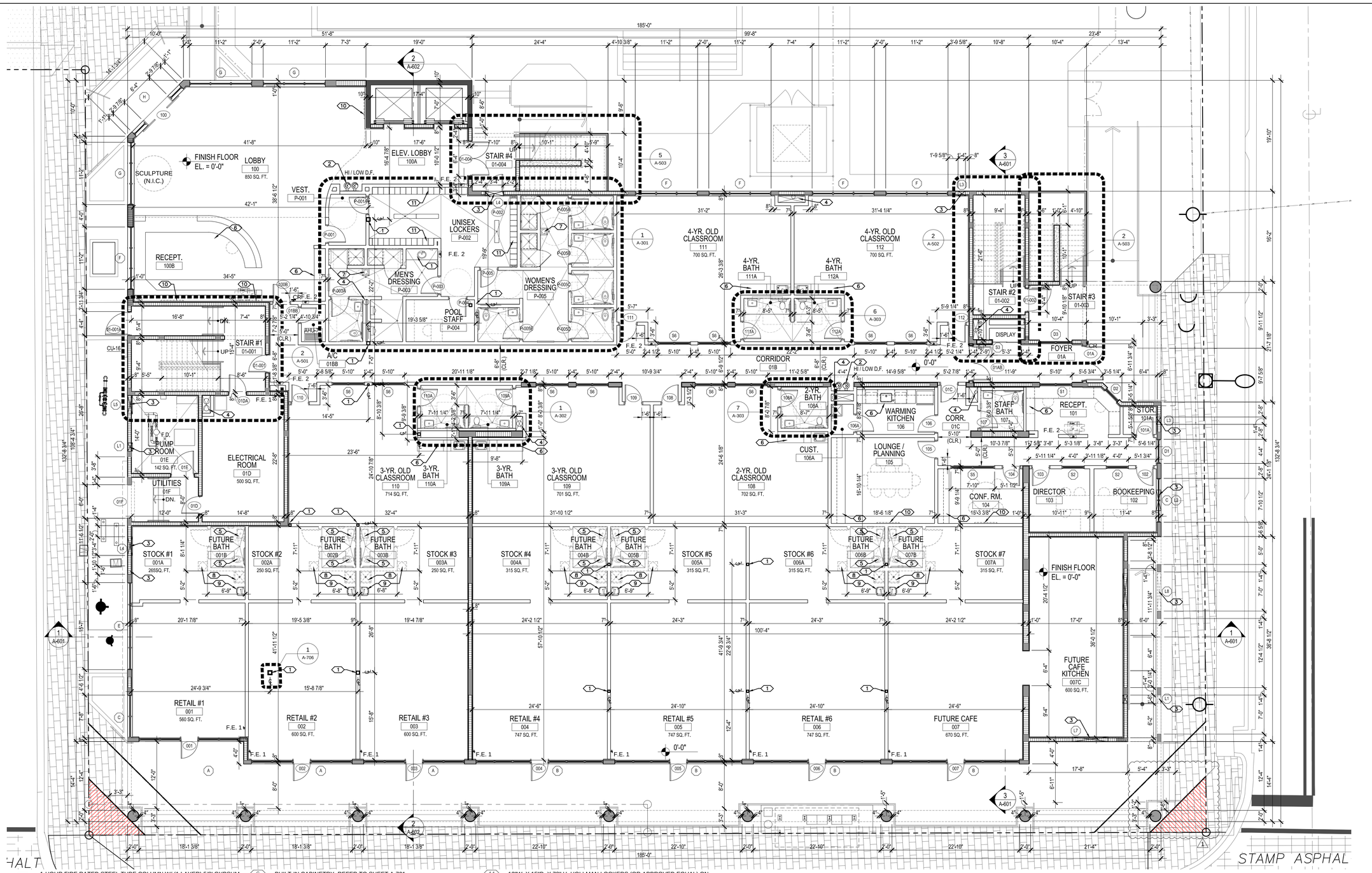

1. 1-HOUR FIRE RATED STEEL TUBE COLUMN W/ (1 LAYER) 5/8' GYPSUM WALLBOARD FULLY APPLIED TO THE OUTER SURFACE OF THE STEEL COVER AS PER U.L. DESIGN NO X526 (REFER TO STRUCT. DWG'S.).
2. HI / LOW ADA DRINKING FOUNTAIN WITH ENHANCED BOTTLE FILLING STATION WITH 72" HIGH WALL TILE ON TILE BACKER BOARD IN 3-SIDED NICHE. (REFER TO PLUMBING DRAWINGS).
3. INDICATES WALL INTAKE OR EXHAUST LOUVER WITH "CLEAR" ANODIZED ALUMINUM FINISH - TYPICAL. (REFER TO LOUVER SCHEDULE A-803 AND MECHANICAL DRAWINGS FOR ADDITIONAL INFORMATION).
4. PLUMBING CHASE FOR ROOF DRAINS AND /OR PLAZA DECK DRAINS ABOVE. (REFER TO PLUMBING DRAWINGS).
5. PROVIDE SANITARY AND WATER STUBS FOR FUTURE PLUMBING FIXTURES. (REFER TO PLUMBING DRAWINGS).
6. BUILT-IN CABINETRY, REFER TO SHEET A-701.
7. SUIT-MATE SWIMSUIT WATER EXTRACTOR. (REFER TO ELECTRICAL AND PLUMBING DRAWINGS).
8. FUTURE MOP SINK UNDER SEPARATE TENANT IMPROVEMENT PERMIT. (REFER TO PLUMBING DRAWINGS FOR WATER AND SANITARY STUBS).
9. FUTURE SINGLE ELECTRIC WATER FOUNTAIN UNDER SEPARATE TENANT IMPROVEMENT PERMIT FOR WHEELCHAIR USERS. FUTURE TENANT TO PROVIDE A WATER DISPENSER FOR STANDING PERSONS AS ALLOWED PER F.P.C. 410.4 (REFER TO PLUMBING DRAWINGS FOR WATER AND SANITARY STUBS).
10. WALL BRACKET MOUNTED POWER OUTLET AND JUNCTION BOX FOR TELEVISION INSTALLATION PER DETAIL X/ A-XXX. REFER TO ELECTRICAL DETAILS FOR MORE INFORMATION.
11. 12"W. X 15"D. X 72" H. HOLLMAN LOCKERS (OR APPROVED EQUAL) ON 6" HIGH CONCRETE (SECONDARY POUR). REFER TO DETAIL 2 AND 3/A-902.

NOTE:
ASSUMED DATUM 0'-0" EQUAL TO 7.00' N.A.V.D. ELEVATION, 1988. (REFER TO CIVIL DRAWING)

REFER TO FINISH PLAN SHEET A-804 FOR WALL TYPES AND INTERIOR ELEVATION TAGS.

1 FIRST FLOOR PLAN
SCALE: 1/8" = 1'-0"

SYNALOVSKI ROMANIK SAYE
Architecture • Planning • Interior Design
1800 Eller Drive, Suite 500
Fort Lauderdale, FL 33316
T 954.961.6806
F 954.961.6807
www.synalovski.com
Manuel Synalovski, AIA
AR 0011698
SEAL
LICENSE NO. AA26001863

LA LEE YMCA MIZELL COMMUNITY CENTER

1409 NW 6th STREET (SISTRUNK BOULEVARD)
FORT LAUDERDALE, FL 33311

CLIENT: YMCA SOUTH FLORIDA

REV	DATE	DESCRIPTION
1	05/10/19	DRC SIGN-OFF

DESIGN DELIVERABLE: 100% GMP BID SET
ISSUE DATE: 04/26/2019

PROJECT NUMBER: 1236-160227
DRAWN BY: CB
CHECKED BY: MS

Copyright (c) by SYNALOVSKI ROMANIK SAYE, LLC
All Rights Reserved.

SHEET TITLE:
FIRST FLOOR PLAN

SHEET NUMBER:
A-101

E:\1236-160227 YMCA Sistrunk\Drawings\A-101.dwg 6/6/2019 10:13:03 AM

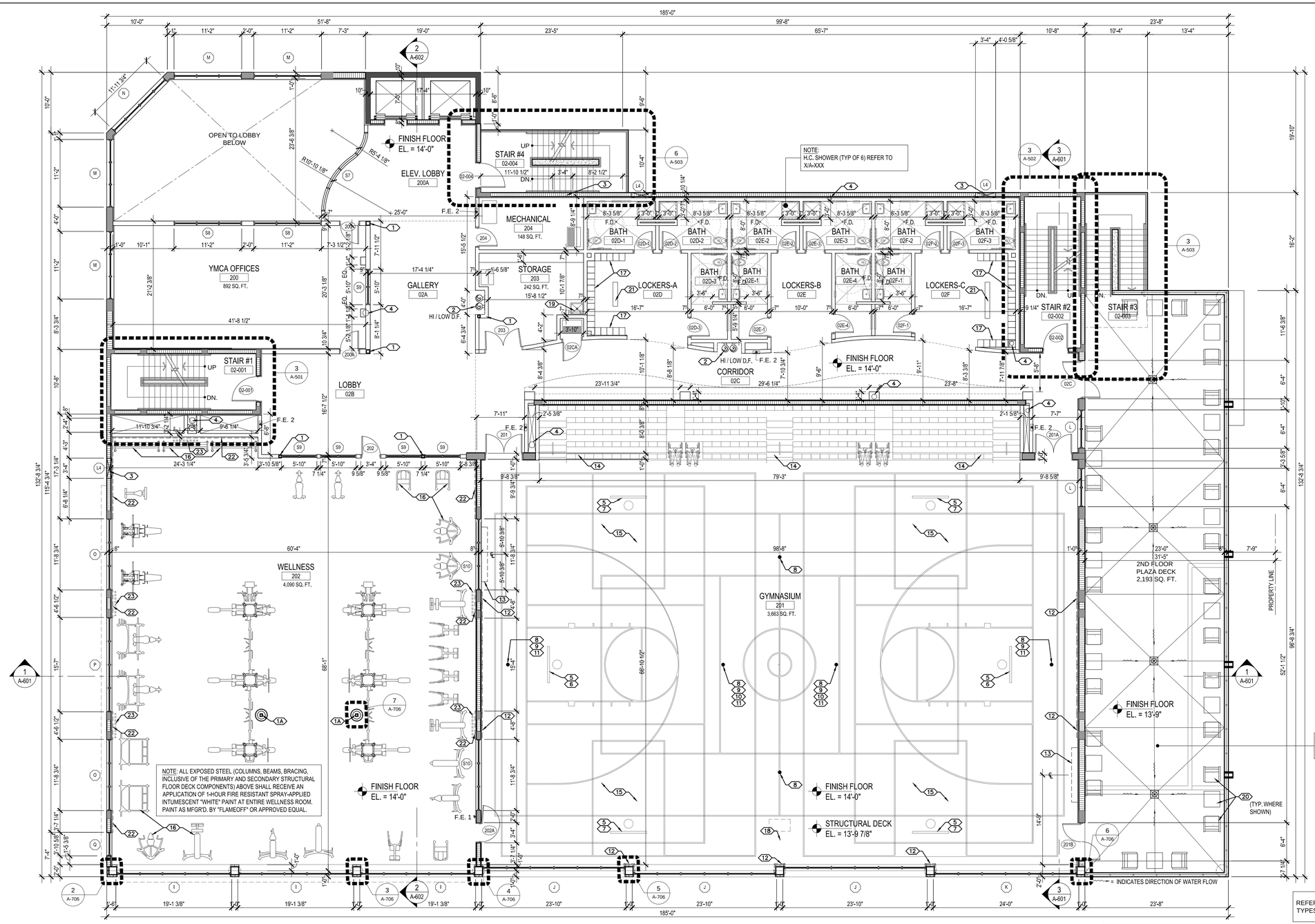

REFER TO FINISH PLAN SHEET A-805 FOR WALL TYPES AND INTERIOR ELEVATION TAGS.

1. 1-HOUR FIRE RATED STEEL TUBE COLUMN W/ (1 LAYER) 5/8" GYPSUM WALLBOARD FULLY APPLIED TO THE OUTER SURFACE OF THE STEEL COVER AS PER U.L. DESIGN NO X526 (REFER TO STRUCT. DWG'S.).

1A. DECORATIVE CIRCULAR METAL FINISH WRAPPED AROUND 1-HOUR FIRE RATED STEEL COLUMN AS DESCRIBED IN KEYNOTE #1.

2. HI / LOW ADA DRINKING FOUNTAIN WITH ENHANCED BOTTLE FILLING STATION WITH 72" HIGH WALL TILE ON TILE BACKER BOARD IN 3-SIDED NICHE. (REFER TO PLUMBING DRAWINGS).

3. INDICATES WALL INTAKE OR EXHAUST LOUVER WITH "CLEAR" ANODIZED ALUMINUM FINISH - TYPICAL. (REFER TO LOUVER SCHEDULE A-803 AND MECHANICAL DRAWINGS FOR ADDITIONAL INFORMATION).

4. PLUMBING CHASE FOR ROOF DRAINS AND / OR PLAZA DECK DRAINS ABOVE. PROVIDE 1-HOUR FIRE RATED U.L. APPROVED THRU-PENETRATE FLOOR SYSTEM SEALANT EACH LOCATION (REFER TO PLUMBING DRAWINGS).

5. 72"X42" RECTANGULAR GLASS BACKBOARD (FULLY TEMPERED 1/2" GLASS WITH OFFICIAL WHITE TARGET AND BORDER, FRAME BRUSHED ALUMINUM) BY PERFORMANCE SPORTS SYSTEMS, MODEL NO. LXP4200, BASKETBALL BACKBOARD WITH FRAME SUPPORT ATTACHED TO CEILING-TYPICAL OF 6. GOAL BRACE DIRECT GOAL ATTACHMENT BY PERFORMANCE SPORTS SYSTEMS, MODEL NO. 2000+ - TYPICAL OF 6 . ALL BACKBOARDS TO BE MOTORIZED RETRACTABLE TYPE.

6. FORWARD FOLDING BASKETBALL BACKSTOP AND ELECTRIC WINCH BY PERFORMANCE SPORTS SYSTEMS, MODEL NO. 3103. TYPICAL OF 2. PROVIDE BACKSTOP AUTOLOCK SAFETY STRAP FOR EACH BY PERFORMANCE SPORTS SYSTEMS, MODEL NO. 1100.

7. SIDE FOLDING BASKETBALL BACKSTOP AND ELECTRIC WINCH BY PERFORMANCE SPORTS SYSTEMS, MODEL NO. 3109. TYPICAL OF 4. PROVIDE BACKSTOP AUTOLOCK SAFETY STRAP FOR EACH BY PERFORMANCE SPORTS SYSTEMS, MODEL NO. 1100.

8. VOLLEYBALL POST SLEEVES BY PERFORMANCE SPORT SYSTEMS, MODEL NO. 6400 - TYPICAL OF 6.

9. TELESCOPIC VOLLEYBALL POSTS BY PERFORMANCE SPORTS SYSTEMS, MODEL NO. 6100. - TYPICAL OF 4.

10. COLLEGIATE VOLLEYBALL NETS BY GARED SPORTS, MODEL NO. 7500, TOTAL OF 2 NETS TO BE PROVIDED.

11. NET ANTENNAS BY GARED SPORTS MODEL NO. 6412, TOTAL OF 4 ANTENNAS TO BE PROVIDED.

12. 72" TALL X 1-1/4" THICK WALL PADS BY PERFORMANCE SPORT SYSTEMS 48 LINEAR FEET. INCLUDE 3 WALL PAD FULLY WRAPPED PADS AT STEEL TUBE COLUMNS. REFER TO X/A-XXX FOR MORE INFORMATION.

13. SCOREBOARDS AS MANUFACTURED BY ELECTRO-MECH SCOREBOARD CO., MODEL 2655 OR APPROVED EQUAL (2 REQUIRED). REFER TO ELECTRICAL DRAWINGS.

14. THREE (3) BANKS - 5 ROWS X +/- 73'-0" LONG TELESCOPIC BLEACHERS BY SHERIDAN SEATING, INC., SIMILAR TO MODEL M-200, MANUAL OPERATION, PLASTIC CONTOURED SEATS, INTERIOR AISLE WITH RAILINGS AND ADA COMPLIANCE.

15. POLYURETHANE FINISHED NORTHERN HARD MAPLE FLOORING AS MANUFACTURED BY CONNOR SPORTS, VIP II FIXED RESILIENT SYSTEM, SIMILAR TO MODEL M-200 OR APPROVED EQUAL. COORDINATE COLOR AND LINE PLACEMENT FOR 1 MAIN BASKETBALL COURT, 2 SIDE BASKETBALL COURTS, 1 MAIN VOLLEYBALL COURT AND 2 SIDE VOLLEYBALL COURTS WITH ARCHITECT.

16. WELLNESS EQUIPMENT (NOT IN CONTRACT).

17. 12"W. X 15"D. X 72" H. HOLLMAN LOCKERS (OR APPROVED EQUAL) ON 6" HIGH CONCRETE (SECONDARY POUR). REFER TO DETAIL 2 AND 3/A-902.

NOTE: FOLLOWING THE APPLICATION OF 1-HOUR SPRAY-APPLIED FIRE RESISTIVE MATERIAL TO THE STRUCTURAL COMPONENTS AT THE UNDERSIDE OF THE ENTIRE 4TH FLOOR PLAZA DECK AS DESCRIBED IN NOTE 3 I LS-100, THE UNDERSIDE OF THE METAL DECKING SHALL RECEIVE "MONOGLASS" SPRAY INSULATION (5" THICK FOR R-20 INSULATION) OR APPROVED EQUAL. COMPLY WITH 2017, 6TH EDITION ENERGY CONSERVATION CODE 303.1.1.1 - "NO THERMAL BARRIER IS REQUIRED" AS SPECIFIED. SPRAY INSULATION SHALL BE APPLIED TO THE ENTIRE UNDERSIDE OF GYMNASIUM METAL DECK CEILING FOR VISUAL CONTINUITY.

18. FLOOR CONTROL ACCESS BOX FOR SCOREBOARD AND BASKETBALL BACKSTOP CONTROLS. COORDINATE LOCATION WITH ARCHITECT.

19. MOP SINK AND MOP RACK ABOVE TO BE INSTALLED @ 5'-0" A.F.F., BOBRICK MODEL NO. 239 X 34 (REFER TO PLUMBING DRAWINGS FOR ADDITIONAL INFORMATION).

20. FIXED OUTDOOR SEATING (PROVIDED BY OWNER AND INSTALLED BY CONTRACTOR).

21. BENCHES (N.I.C.)

22. MIRRORS TO START ABOVE BASEBOARD (6" A.F.F.) AND ALIGN WITH TOP OF WINDOWS.

23. CHAIN HUNG TELEVISION. COORDINATE WITH OWNER.

1 SECOND FLOOR PLAN
SCALE: 1/8" = 1'-0"

SYNALOVSKI ROMANIK SAYE
Architecture • Planning • Interior Design
1800 Eller Drive, Suite 500
Fort Lauderdale, FL 33316
T 954.961.6806
F 954.961.6807
www.synalovski.com

Manuel Synalovski, AIA
AR 0011698
SEAL

LICENSE NO. AA26001863

LA LEE YMCA MIZELL COMMUNITY CENTER

1409 NW 6th STREET (SISTRUNK BOULEVARD)
FORT LAUDERDALE, FL 33311

CLIENT: YMCA SOUTH FLORIDA

REV	DATE	DESCRIPTION

DESIGN DELIVERABLE: 100% GMP BID SET
ISSUE DATE: 04/26/2019

PROJECT NUMBER: 1236-160227
DRAWN BY: CB
CHECKED BY: MS

Copyright (c) by SYNALOVSKI ROMANIK SAYE, LLC
All Rights Reserved.

SHEET TITLE:
SECOND FLOOR PLAN

SHEET NUMBER:
A-102

E:\1236-160227 YMCA Sistrunk\Drawings\A-102.dwg 05/20/19 11:09:47 AM

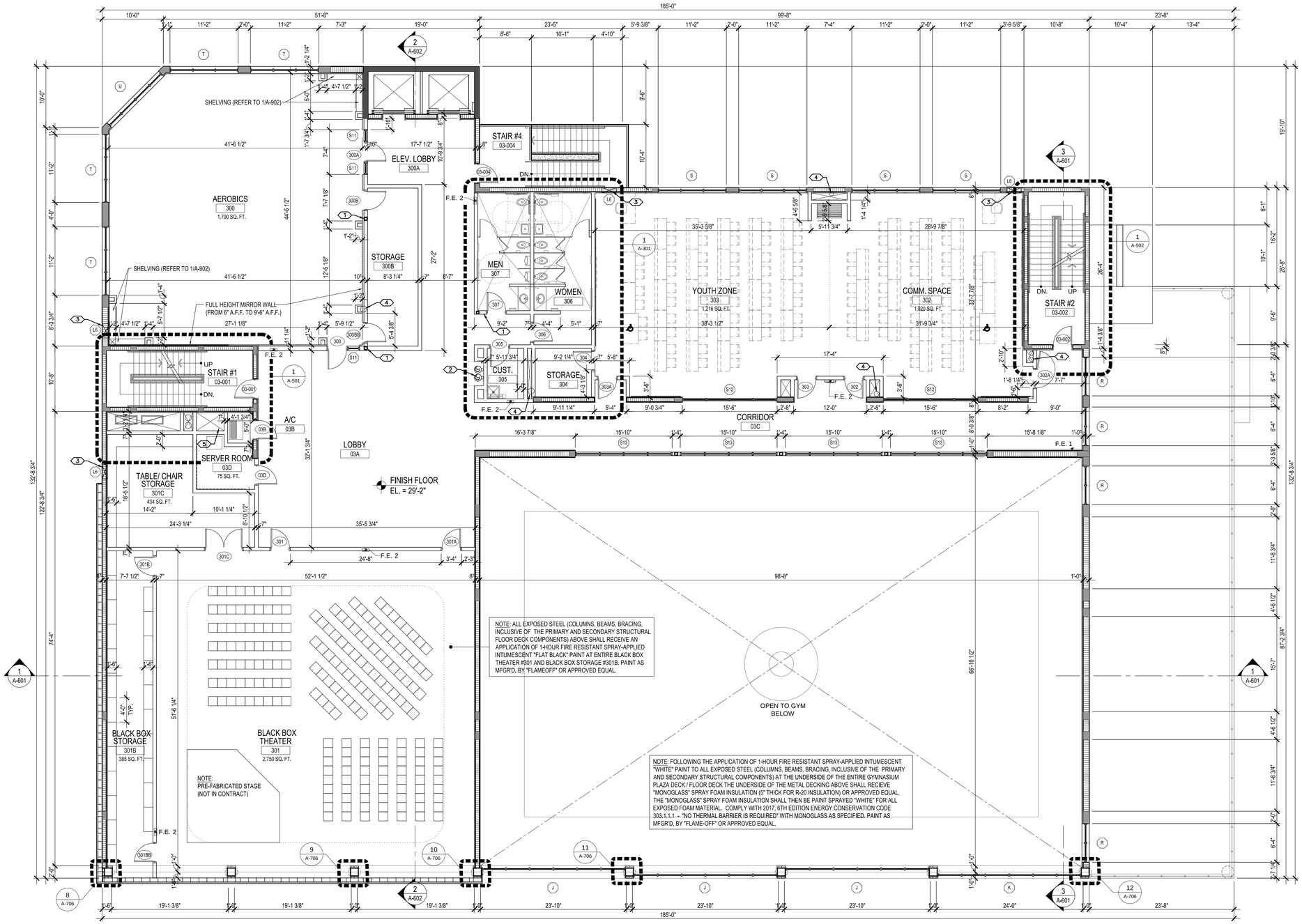

1. 1-HOUR FIRE RATED STEEL TUBE COLUMN W/ (1 LAYER) 5/8' GYPSUM WALLBOARD FULLY APPLIED TO THE OUTER SURFACE OF THE STEEL COVER AS PER U.L. DESIGN NO X526 (REFER TO STRUCT. DWG'S.).
2. HI / LOW ADA DRINKING FOUNTAIN WITH ENHANCED BOTTLE FILLING STATION WITH 72" HIGH WALL TILE ON TILE BACKER BOARD IN 3-SIDED NICHE. (REFER TO PLUMBING DRAWINGS).
3. INDICATES WALL INTAKE OR EXHAUST LOUVER WITH "CLEAR" ANODIZED ALUMINUM FINISH - TYPICAL. (REFER TO LOUVER SCHEDULE A-803 AND MECHANICAL DRAWINGS FOR ADDITIONAL INFORMATION).
4. PLUMBING CHASE FOR ROOF DRAINS AND / OR PLAZA DECK DRAINS ABOVE. PROVIDE 1-HOUR FIRE RATED U.L. APPROVED THRU-PENETRATE FLOOR SYSTEM SEALANT EACH LOCATION (REFER TO PLUMBING DRAWINGS).
5. CHASE FOR DATA / COMMUNICATIONS. PROVIDE 1-HOUR FIRE RATED U.L. APPROVED THRU- PENETRATE FLOOR SYSTEM SEALANT EACH LOCATION. COORDINATE WITH YMCA DATA VENDOR.

REFER TO FINISH PLAN SHEET A-806 FOR WALL TYPES AND INTERIOR ELEVATION TAGS.

1 THIRD FLOOR PLAN
SCALE: 1/8" = 1'-0"

SYNALOVSKI ROMANIK SAYE
Architecture • Planning • Interior Design
1800 Eller Drive, Suite 500
Fort Lauderdale, FL 33316
T 954.961.6806
F 954.961.6807
www.synalovski.com

Manuel Synalovski, AIA
AR 0011698
SEAL

LICENSE NO. AA26001863

LA LEE YMCA
MIZELL COMMUNITY CENTER
1409 NW 6th STREET (SISTRUNK BOULEVARD)
FORT LAUDERDALE, FL 33311
CLIENT: YMCA SOUTH FLORIDA

REV	DATE	DESCRIPTION

DESIGN DELIVERABLE: 100% GMP BID SET
ISSUE DATE: 04/26/2019

PROJECT NUMBER: 1236-160227
DRAWN BY: CB
CHECKED BY: MS

Copyright (c) by SYNALOVSKI ROMANIK SAYE, LLC
All Rights Reserved.

SHEET TITLE:
THIRD FLOOR PLAN

SHEET NUMBER:
A-103

E:\1236-160227 YMCA Sistrunk\Drawings\A-103.dwg 6/6/2019 11:10:39 AM

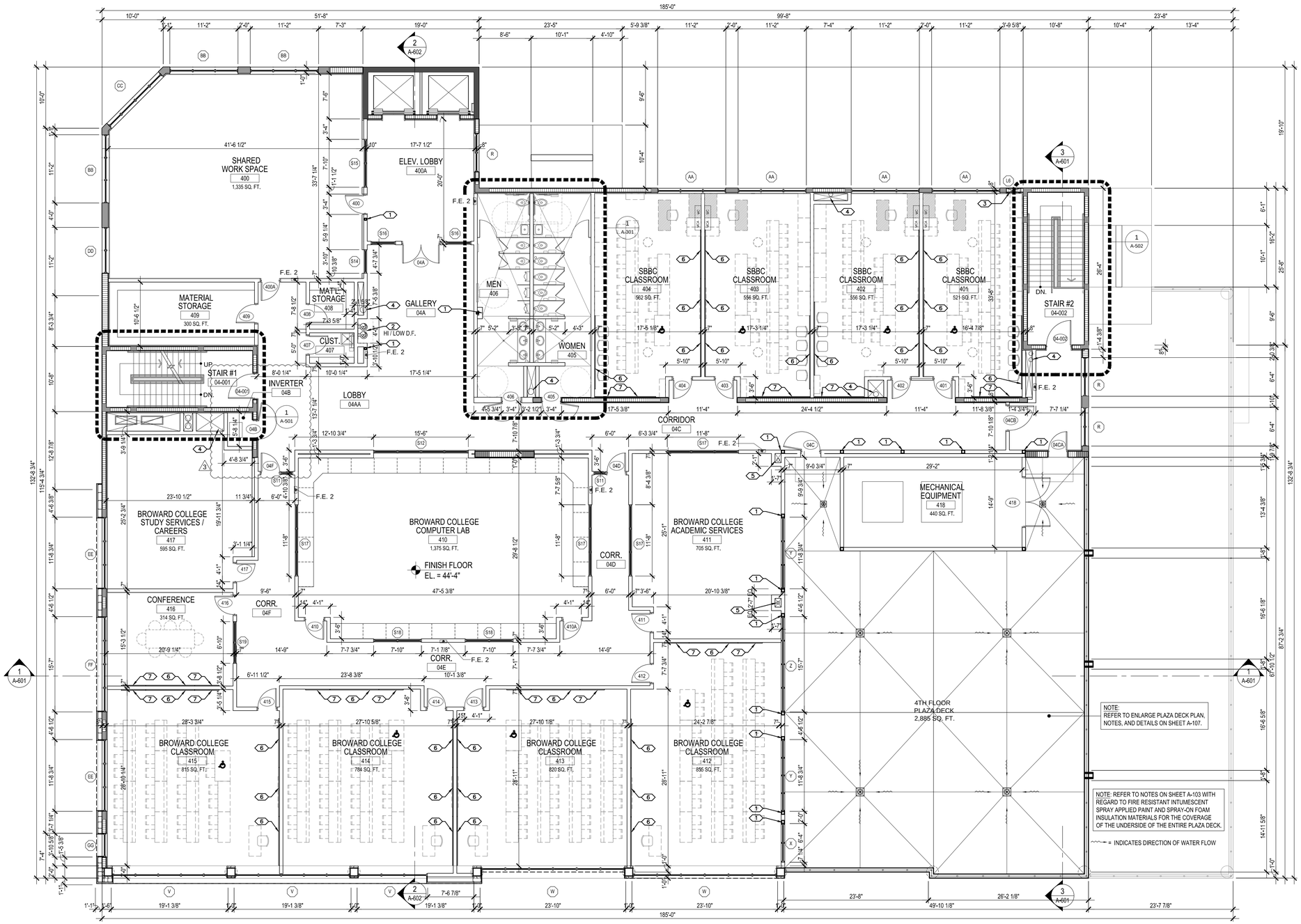

1. 1-HOUR FIRE RATED STEEL TUBE COLUMN W/ (1 LAYER) 5/8' GYPSUM WALLBOARD FULLY APPLIED TO THE OUTER SURFACE OF THE STEEL COVER AS PER U.L. DESIGN NO X526 (REFER TO STRUCT. DWG'S.).
2. HI / LOW ADA DRINKING FOUNTAIN WITH ENHANCED BOTTLE FILLING STATION WITH 72" HIGH WALL TILE ON TILE BACKER BOARD IN 3-SIDED NICHE. (REFER TO PLUMBING DRAWINGS).
3. INDICATES WALL INTAKE OR EXHAUST LOUVER WITH "CLEAR" ANODIZED ALUMINUM FINISH - TYPICAL. (REFER TO LOUVER SCHEDULE A-803 AND MECHANICAL DRAWINGS FOR ADDITIONAL INFORMATION).
4. PLUMBING CHASE FOR ROOF DRAINS AND / OR PLAZA DECK DRAINS ABOVE. PROVIDE 1-HOUR FIRE RATED U.L. APPROVED THRU-PENETRATE FLOOR SYSTEM SEALANT EACH LOCATION (REFER TO PLUMBING DRAWINGS).
5. OVERFLOW OUTLET DRAIN FROM ROOF TO SPILL ONTO PLAZA DECK AT 8" ABOVE FINISH WALKING SURFACE (REFER TO PLUMBING DRAWINGS FOR SIZE AND SPECIFICATIONS).

REFER TO FINISH PLAN SHEET A-807 FOR WALL TYPES AND INTERIOR ELEVATION TAGS.

1 FOURTH FLOOR PLAN
SCALE: 1/8" = 1'-0"

SYNALOVSKI ROMANIK SAYE
Architecture • Planning • Interior Design
1800 Eller Drive, Suite 500
Fort Lauderdale, FL 33316
T 954.961.6806
F 954.961.6807
www.synalovski.com
Manuel Synalovski, AIA
AR 0011698
SEAL
LICENSE NO. AA26001863

LA LEE YMCA MIZELL COMMUNITY CENTER

1409 NW 6th STREET (SISTRUNK BOULEVARD)
FORT LAUDERDALE, FL 33311

CLIENT: YMCA SOUTH FLORIDA

REV	DATE	DESCRIPTION
3	06/10/19	BUILDING DEPT. COMMENTS

DESIGN DELIVERABLE: 100% GMP BID SET
ISSUE DATE: 04/26/2019

PROJECT NUMBER: 1236-160227
DRAWN BY: CB
CHECKED BY: MS

Copyright (c) by SYNALOVSKI ROMANIK SAYE, LLC
All Rights Reserved.

SHEET TITLE:
FOURTH FLOOR PLAN

SHEET NUMBER:
A-104

E:\1236-160227 YMCA Sistrunk\Drawings\A-104.dwg 6/6/2019 11:11:30 AM

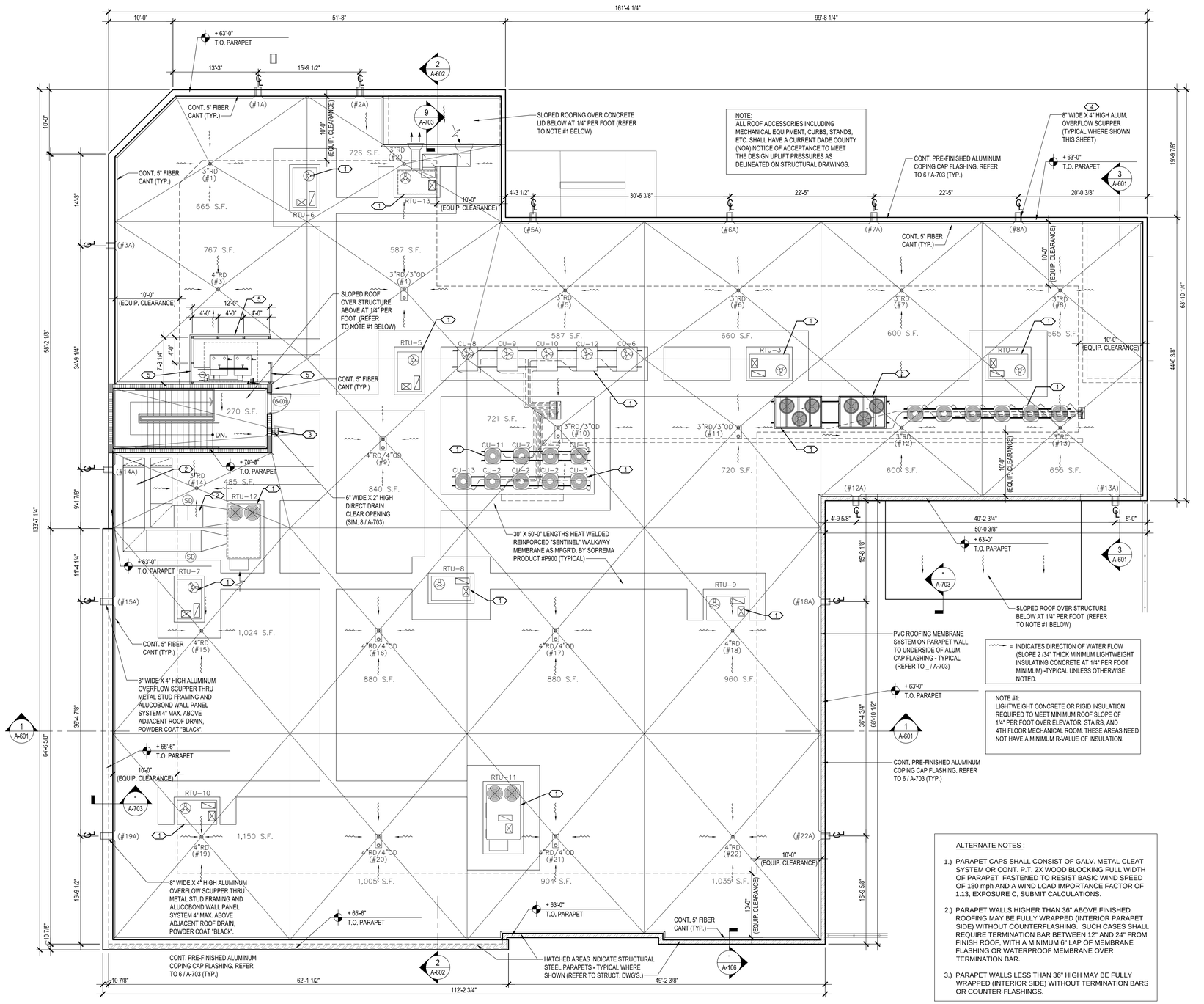

ALTERNATE NOTES :

1.) PARAPET CAPS SHALL CONSIST OF GALV. METAL CLEAT SYSTEM OR CONT. P.T. 2X WOOD BLOCKING FULL WIDTH OF PARAPET FASTENED TO RESIST BASIC WIND SPEED OF 180 mph AND A WIND LOAD IMPORTANCE FACTOR OF 1.13, EXPOSURE C, SUBMIT CALCULATIONS.

2.) PARAPET WALLS HIGHER THAN 36" ABOVE FINISHED ROOFING MAY BE FULLY WRAPPED (INTERIOR PARAPET SIDE) WITHOUT COUNTERFLASHING. SUCH CASES SHALL REQUIRE TERMINATION BAR BETWEEN 12" AND 24" FROM FINISH ROOF, WITH A MINIMUM 6" LAP OF MEMBRANE FLASHING OR WATERPROOF MEMBRANE OVER TERMINATION BAR.

3.) PARAPET WALLS LESS THAN 36" HIGH MAY BE FULLY WRAPPED (INTERIOR SIDE) WITHOUT TERMINATION BARS OR COUNTER-FLASHINGS.

2 ROOF PLAN
SCALE: 1/8" = 1'-0"

ROOF DRAINAGE CALCULATIONS:

RAINFALL RATE: 5 INCHES PER HOUR

2017 FLORIDA PLUMBING CODE, 6th EDITION, CHAPTER 11 - (GPM TABLES) 2014 FLORIDA PLUMBING CODE, 5th EDITION, CHAPTER 11 - (S.F. TABLES)			TABLE 1106.2 TABLE 1106.2(1)	TABLE 1106.7
ROOF DRAIN #, OVERFLOW #	CIRCULAR ROOF DRAIN diameter (inches)	ACTUAL AREA or GPM	ALLOWED AREA or GPM	HEAD 4"/ WEIR 8" ALLOWED OVERFLOW AREA
1	3"	665 SQ. FT. or 34.5 GPM	1,760 S.F. or 87 GPM	-
1A	-	-	-	3,589 S.F.
2	3"	726 SQ. FT. or 37.7 GPM	1,760 S.F. or 87 GPM	-
2A	-	-	-	3,589 S.F.
3	3"	767 SQ. FT. or 38.5 GPM	1,760 S.F. or 87 GPM	-
3A	-	-	-	3,589 S.F.
4	3"	587 SQ. FT. or 30.5 GPM	1,760 S.F. or 87 GPM	-
4A	3" O.D.	-	-	-
5	3"	587 SQ. FT. or 30.5 GPM	1,760 S.F. or 87 GPM	-
5A	-	-	-	3,589 S.F.
6	3"	660 SQ. FT. or 34.3 GPM	1,760 S.F. or 87 GPM	-
6A	-	-	-	3,589 S.F.
7	3"	600 SQ. FT. or 31.2 GPM	1,760 S.F. or 87 GPM	-
7A	-	-	-	3,589 S.F.
8	3"	565 SQ. FT. or 30.2 GPM	1,760 S.F. or 87 GPM	-
8A	-	-	-	3,589 S.F.
9 (*)	4"	1,010 SQ. FT. or 52.5 GPM	3,680 S.F. or 180 GPM	-
9A	4" O.D.	-	-	-
10	3"	721 SQ. FT. or 37.5 GPM	1,760 S.F. or 87 GPM	-
10A	3" O.D.	-	-	-
11	3"	720 SQ. FT. or 37.5 GPM	1,760 S.F. or 87 GPM	-
11A	3" O.D.	-	-	-
12	3"	600 SQ. FT. or 31.2 GPM	1,760 S.F. or 87 GPM	-
12A	-	-	-	3,589 S.F.
13	3"	655 SQ. FT. or 34.0 GPM	1,760 S.F. or 87 GPM	-
13A	-	-	-	3,589 S.F.
14	3"	485 SQ. FT. or 25.2 GPM	1,760 S.F. or 87 GPM	-
14A	-	-	-	3,589 S.F.
15	4"	1,024 SQ. FT. or 53.2 GPM	3,680 S.F. or 180 GPM	-
15A	-	-	-	3,589 S.F.
16	4"	880 SQ. FT. or 45.7 GPM	3,680 S.F. or 180 GPM	-
16A	4" O.D.	-	-	-
17	4"	880 SQ. FT. or 45.7 GPM	3,680 S.F. or 180 GPM	-
17A	4" O.D.	-	-	-
18	4"	960 SQ. FT. or 49.9 GPM	3,680 S.F. or 180 GPM	-
18A	-	-	-	3,589 S.F.
19	4"	1,150 SQ. FT. or 59.7 GPM	3,680 S.F. or 180 GPM	-
19A	-	-	-	3,589 S.F.
20	4"	1,005 SQ. FT. or 52.2 GPM	3,680 S.F. or 180 GPM	-
20A	4" O.D.	-	-	-
21	4"	904 SQ. FT. or 47.9 GPM	3,680 S.F. or 180 GPM	-
21A	4" O.D.	-	-	-
22	4"	1,035 SQ. FT. or 52.2 GPM	3,680 S.F. or 180 GPM	-
22A	-	-	-	3,589 S.F.

GENERAL NOTES:

1.) SCUPPER AND OVERFLOW HEAD & WIER SIZES AS INDICATED ABOVE SHALL BE FINISH DIMENSIONS. MASONRY OPENINGS FOR SAME SHALL BE 2" LARGER IN ALL DIRECTIONS - TYPICAL THROUGHOUT.

2.) ONE HALF OF THE AREA OF VERTICAL WALLS THAT DIVERT RAINWATER TO THE ROOF HAVE BEEN ADDED TO THE TOTAL PROJECTED ROOF AREAS ABOVE AS PER F.P.C. 1106.4

(*) = AREA 9 INCLUDES 270 S.F. or 14 GPM FROM STAIR #1 ROOF. STAIR #1 SHALL HAVE 4" W. X 2" DEEP DOWNSPOUT TO SPLASH BLOCK BELOW. PER TABLE 1106.3, ALLOWS 92 GPM STAIR ROOF.

4 ROOF DRAINAGE CALCULATIONS

1. ANY ROOFTOP EQUIPMENT THAT IS 60" IN HEIGHT OR LOWER IS PLACED A MINIMUM OF 10'-0" FROM THE ROOF PARAPET TO ELIMINATE ANY STREET VIEWS OF SAID EQUIPMENT.
2. ANY ROOFTOP EQUIPMENT THAT IS 36" IN HEIGHT OR LOWER MAY BE PLACED IMMEDIATELY BEHIND THE 36" HIGH PARAPET WALL TO ELIMINATE ANY STREET VIEWS OF SAID EQUIPMENT.
3. 12"W. X 8"D. ALUMINUM COLLECTOR HEAD TO 4"W. X 2"D. ALUMINUM DOWNSPOUT DOWN TO CONCRETE SPLASH BLOCK. (REFER TO - / A-106). ALL COMPONENTS SHALL RECEIVE "WHITE" POWDER COAT FACTORY FINISH.
4. 10" WIDE X 6" HIGH MASONRY OPENING FOR 8" WIDE A 4" HIGH FINISH ALUMINUM OVERFLOW SCUPPER. ALL COMPONENTS SHALL RECEIVE "WHITE" POWDER COAT FINISH, EXCEPT FOR SCUPPERS #15 / #16 & #19 / #20 SHALL RECEIVE "BLACK" POWDER COAT FINISH AND EXTENDED LENGTH THRU METAL FRAMING AND METAL WALL PANEL SYSTEM (REFER TO 8 / A-703) SCUPPER BOTTOM AT 4" MAXIMUM ABOVE ADJACENT ROOF DRAIN (TYPICAL THIS SHEET UNLESS OTHERWISE NOTED).
5. BOILER EQUIPMENT SCREEN ATTACHED TO PRIMED AND PAINTED STEEL POST WELDED TO BAR JOISTS (REFER TO STRUCT. DWG'S). SCREENS SHALL BE CLEAR ANOD. FACTORY FINISH HORIZ. BLADE LOUVERS, MODEL DC-6174 AS MFGR'D. BY CONSTRUCTION SPECIALTIES, INC. (BASIS OF DESIGN) OR EQUAL. SCREEN BOTTOM SHALL BE 24" CLEAR ABOVE ROOF MEMBRANE. SCREEN TOP SHALL BE 108" ABOVE ROOF MEMBRANE (REFER TO 2 / A-705), - NOA 17-0124.07

3 ROOF KEYNOTES

GENERAL ROOF NOTES:

1. SUBMIT ROOFING SHOP DRAWINGS FOR REVIEW AND APPROVAL TO ARCHITECT PRIOR TO SUBMITTAL TO BUILDING DEPARTMENT. SYSTEM SHOP DRAWINGS SHALL INCLUDE FLASHING DETAILS FOR ALL CONDITIONS.
2. ALL ROOFING SHALL MEET CLASS A REQUIREMENTS.
3. ROOF PERMIT REQUIRED PRIOR TO INSTALLATION.
4. ROOFING MANUFACTURER REPRESENTATIVE SHALL INSPECT ROOF WITHIN (1)-YEAR OF ACCEPTANCE AND SHALL CERTIFY WARRANTY AND ROOFING INSTALLATION. TYPICAL FOR ALL ROOFING THIS PROJECT.
5. THERMOPLASTIC POLYVINYL CHLORIDE (PVC) ROOFING MEMBRANE SYSTEM TO HAVE NON-PRO-RATED, MINIMUM 20 YEAR, WRITTEN FULL WARRANTY NO DOLLAR LIMIT. BASIS OF DESIGN SHALL BE "SOPREMA" SENTINEL P150 HFB SINGLE PLY MEMBRANE ADHERED IN CR-20 OVER ONE PLY OF SOPRELENE 180 SANDED ADHERED IN COPLY EF ADHESIVE OVER 370 psi (2 3/4" MINIMUM THICKNESS AT ROOF DRAINS) CELCORE MF W/ HS RHEOLGY ADMIXTURE ABOVE CELCORE S-1 LIGHTWEIGHT INSULATING CONCRETE SLOPED AT 1/4" PER FOOT MINIMUM, ALL OVER RIGID EXPANDED POLYISOCYANURATE HOLY BOARD WITH A COMBINED R-19 MIN. INSULATION (AT ALL ROOF DRAINS). ANY EQUIVALENT SUBSTITUTION SHALL BE SUBMITTED TO ARCHITECT FOR APPROVAL PRIOR TO INSTALLATION. CONTRACTOR TO SUBMIT PRODUCT APPROVAL DATA AT TIME OF PERMIT. PRODUCT MUST COMPLY WITH FLORIDA BUILDING CODE (FBC) HIGH VELOCITY HURRICANE (HVHZ) PROTOCOLS AND REQUIRED FLORIDA PRODUCT APPROVAL #FL-19947-R6.
6. ALL WOOD FASTENING GREATER THAN 4" SHALL HAVE MINIMUM OF TWO FASTENERS. ALL WOOD ENDS SHALL HAVE TWO FASTENERS, 3 INCHES FROM ENDS.
7. ALL METAL FASTENING GREATER THAN 4" SHALL HAVE MINIMUM OF TWO FASTENERS. ALL METAL ENDS SHALL HAVE TWO FASTENERS, 1 1/2 INCHES FROM ENDS.
8. USE 5" WOOD FIBER CANT, TYPICAL THROUGHOUT THIS PROJECT (NOT SHOWN ON STANDARD ROOFING DETAILS).

1 ROOF NOTES

SYNALOVSKI ROMANIK SAYE
Architecture • Planning • Interior Design

1800 Eller Drive, Suite 500
Fort Lauderdale, FL 33316

T 954.961.6806
F 954.961.6807

www.synalovski.com

Manuel Synalovski, AIA
AR 0011698
SEAL

LICENSE NO. AA26001863

LA LEE YMCA MIZELL COMMUNITY CENTER

1409 NW 6th STREET (SISTRUNK BOULEVARD)
FORT LAUDERDALE, FL 33311

CLIENT: YMCA SOUTH FLORIDA

REV	DATE	DESCRIPTION

DESIGN DELIVERABLE: 100% GMP BID SET

ISSUE DATE: 04/26/2019

PROJECT NUMBER: 1236-160227

DRAWN BY: CB

CHECKED BY: MS

Copyright (c) by SYNALOVSKI ROMANIK SAYE, LLC
All Rights Reserved.

SHEET TITLE:

ROOF PLAN

SHEET NUMBER:

A-105

E:\1236-160227 YMCA Sistrunk\Drawings\A-105.dwg 6/6/2019 11:12:19 AM

3 EAST ELEVATION
SCALE: 3/32" = 1'-0"

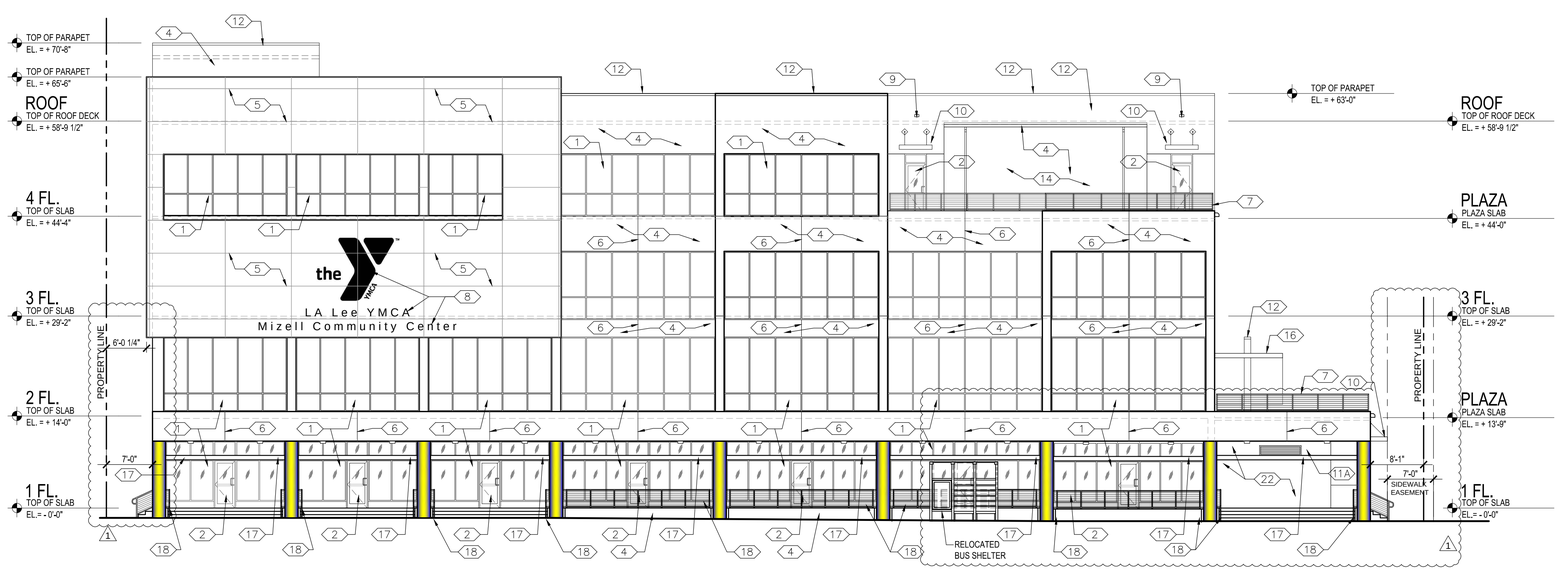

2 SOUTH ELEVATION
SCALE: 3/32" = 1'-0"

1 KEY NOTES

1. ALUMINUM STOREFRONT "GREY" TINTED GLASS (BY VIRACON) IMPACT GLASS WITH "CLEAR" ANODIZED ALUMINUM FRAMES.
2. ALUMINUM STOREFRONT "GREY" TINTED GLASS (BY VIRACON) IMPACT DOOR WITH "CLEAR" ANODIZED ALUMINUM FRAME.
3. HOLLOW METAL IMPACT DOOR AND FRAME WITH PAINT FINISH. PROVIDE PRODUCT APPROVAL.
4. "WHITE" SMOOTH STUCCO FINISH (TYP.).
5. ALUMINUM COMPOSITE METAL PANEL SYSTEM ("FLAT" BLACK) AS MANUFACTURED BY "ALUCABOND" OR APPROVED EQUAL. SUBMIT PRODUCT APPROVAL NOA #15-1019.02.
6. TYPICAL STUCCO CONTROL JOINT. SEE DETAIL X/A-XXX.
7. CLEAR ANOD. ALUM. GUARDRAILS W/ STEEL CABLES. G.C. TO SUBMIT SHOP DRAWINGS & CALC'S. TO ARCHITECT FOR APPROVAL PRIOR TO MANUFACTURING AND INSTALLATION.
8. REVERSE CHANNEL "WHITE" POWDER-COAT FINISH ALUMINUM LETTERS & YMCA LOGO (BACKLIT).
9. ALUMINUM EMERGENCY OVERFLOW SCUPPER (SEE 7 & 8 / A-703).
9A. PRE-CAST CONCRETE EMERGENCY OVERFLOW SCUPPER (SEE 3 & 4 / A-106).
10. ALUMINUM CANOPY "GREY" POWDER COAT FINISH. SUBMIT SHOP DRAWINGS AND CALCULATIONS FOR REVIEW AND APPROVAL PRIOR TO INSTALLATION. (REFER TO 10 / A-504).
11. EXHAUST LOUVER WITH "CLEAR" ANODIZED ALUMINUM FINISH (REFER TO 4 / A-803 AND MECHANICAL DRAWINGS FOR MORE INFORMATION).
11A. OUTSIDE AIR INTAKE LOUVER WITH "CLEAR" ANODIZED ALUMINUM FINISH (REFER TO 4 / A-803 AND MECHANICAL DRAWINGS FOR MORE INFORMATION).
12. ALUMINUM CAP WITH "WHITE" POWDER COAT FACTORY FINISH. PROVIDE (NOA) PRODUCT APPROVAL.
13. CONCRETE PLANTERS BEYOND. REFER TO A-106 AND STRUCTURAL DRAWINGS FOR MORE INFORMATION.
14. MECHANICAL EQUIPMENT ENCLOSURE (REFER TO A-XXX). REFER TO STRUCTURAL DRAWINGS.
15. ALUMINUM GUARDRAILS AND HANDRAILS WITH "CLEAR" ANODIZED ALUMINUM FINISHES. SUBMIT SHOP DRAWINGS AND CALCULATIONS FOR APPROVAL PRIOR TO MANUFACTURING AND INSTALLATION.
16. STRUCTURAL CONCRETE EYEBROW WITH "WHITE" SMOOTH STUCCO FINISH.
17. 4" X 8" "CLEAR" ANODIZED ALUMINUM TUBE TO SUPPORT FUTURE MERCHANT SIGNAGE IN 12" HIGH CLEAR ANODIZED ALUMINUM LETTERS. SIGNAGE FONT TO BE DETERMINED BY ARCHITECT.
18. ALUMINUM HANDRAIL WITH "CLEAR" ANODIZED ALUMINUM FINISH. SUBMIT SHOP DRAWINGS AND CALCULATIONS FOR APPROVAL PRIOR TO MANUFACTURING AND INSTALLATION.
19. CLEAR ANODIZED ALUMINUM DOOR DRIP AS MANUFACTURED BY "PEMKO" 346C (40" OR 72") OR APPROVED EQUAL.
20. WALL MOUNTED LED LIGHT FIXTURE REFER TO REFLECTED CEILING PLANS AND ELECTRICAL DRAWINGS (TYPICAL WHERE SHOWN).
21. 9'-0" TALL CLEAR ANODIZED HORIZONTAL BLADE LOUVER BOILER EQUIPMENT SCREEN (REFER TO STRUCTURAL DWG'S, ROOF PLAN AND 2/A-705).
22. PREPARE WALL SURFACE FOR PUBLIC ART MOASAIC (COORDINATE WITH ARCHITECT).

SYNALOVSKI ROMANIK SAYE
Architecture • Planning • Interior Design
1800 Eller Drive, Suite 500
Fort Lauderdale, FL 33316
T 954.961.6806
F 954.961.6807
www.synalovski.com

Manuel Synalovski, AIA
AR 0011698
SEAL

LICENSE NO. AA26001863

LA LEE YMCA MIZELL COMMUNITY CENTER

1409 NW 6th STREET (SISTRUNK BOULEVARD)
FORT LAUDERDALE, FL 33311

CLIENT: YMCA SOUTH FLORIDA

REV	DATE	DESCRIPTION
1	05/10/19	DRC SIGN-OFF

DESIGN DELIVERABLE: 100% GMP BID SET
ISSUE DATE: 04/26/2019

PROJECT NUMBER: 1236-160227
DRAWN BY: CB
CHECKED BY: MS

Copyright (c) by SYNALOVSKI ROMANIK SAYE, LLC
All Rights Reserved.

SHEET TITLE:
BUILDING ELEVATIONS

SHEET NUMBER:
A-201

E:\1236-160227 YMCA Sistrunk\Drawings\A-201.dwg 6/6/2019 11:21:21 AM

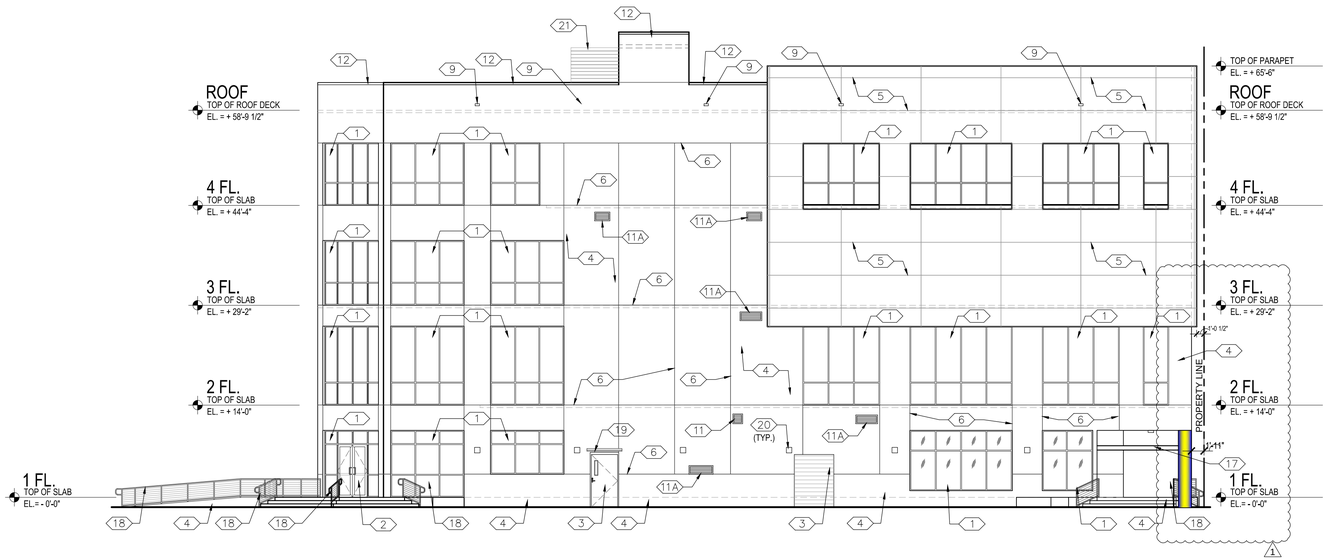

3 WEST ELEVATION
SCALE: 3/32" = 1'-0"

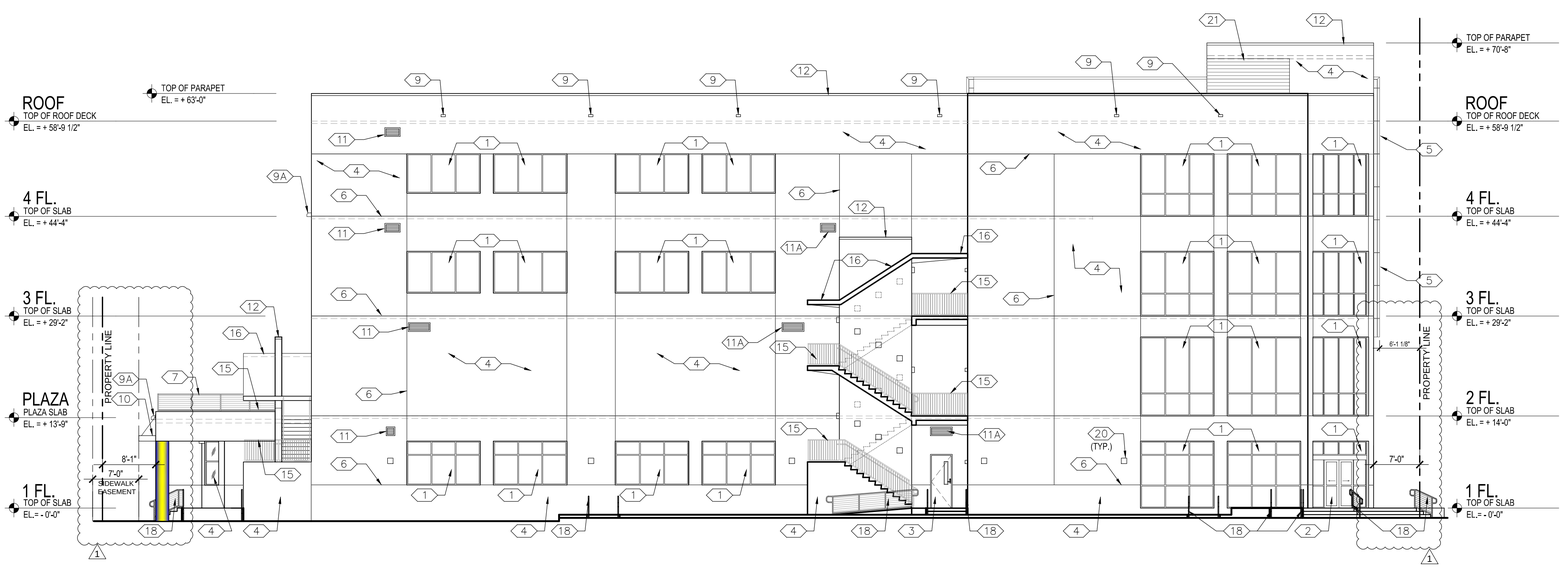

2 NORTH ELEVATION
SCALE: 3/32" = 1'-0"

1 ALUMINUM STOREFRONT "GREY" TINTED GLASS (BY VIRACON) IMPACT GLASS WITH "CLEAR" ANODIZED ALUMINUM FRAMES.

2 ALUMINUM STOREFRONT "GREY" TINTED GLASS (BY VIRACON) IMPACT DOOR WITH "CLEAR" ANODIZED ALUMINUM FRAME.

3 HOLLOW METAL IMPACT DOOR AND FRAME WITH PAINT FINISH. PROVIDE PRODUCT APPROVAL.

4 "WHITE" SMOOTH STUCCO FINISH (TYP.).

5 ALUMINUM COMPOSITE METAL PANEL SYSTEM ("FLAT" BLACK) AS MANUFACTURED BY "ALUCABOND" OR APPROVED EQUAL. SUBMIT PRODUCT APPROVAL NOA #15-1019.02.

6 TYPICAL STUCCO CONTROL JOINT. SEE DETAIL X/A-XXX.

7 CLEAR ANOD. ALUM. GUARDRAILS W/ STEEL CABLES. G.C. TO SUBMIT SHOP DRAWINGS & CALC'S. TO ARCHITECT FOR APPROVAL PRIOR TO MANUFACTURING AND INSTALLATION.

8 REVERSE CHANNEL "WHITE" POWDER-COAT FINISH ALUMINUM LETTERS & YMCA LOGO (BACKLIT).

9 ALUMINUM EMERGENCY OVERFLOW SCUPPER (SEE 7 & 8 / A-703).

9A PRE-CAST CONCRETE EMERGENCY OVERFLOW SCUPPER (SEE 3 & 4 / A-106).

10 ALUMINUM CANOPY "GREY" POWDER COAT FINISH. SUBMIT SHOP DRAWINGS AND CALCULATIONS FOR REVIEW AND APPROVAL PRIOR TO INSTALLATION. (REFER TO 10 / A-504).

11 EXHAUST LOUVER WITH "CLEAR" ANODIZED ALUMINUM FINISH (REFER TO 4 / A-803 AND MECHANICAL DRAWINGS FOR MORE INFORMATION).

11A OUTSIDE AIR INTAKE LOUVER WITH "CLEAR" ANODIZED ALUMINUM FINISH (REFER TO 4 / A-803 AND MECHANICAL DRAWINGS FOR MORE INFORMATION).

12 ALUMINUM CAP WITH "WHITE" POWDER COAT FACTORY FINISH. PROVIDE (NOA) PRODUCT APPROVAL.

13 CONCRETE PLANTERS BEYOND. REFER TO A-106 AND STRUCTURAL DRAWINGS FOR MORE INFORMATION.

14 MECHANICAL EQUIPMENT ENCLOSURE (REFER TO A-XXX). REFER TO STRUCTURAL DRAWINGS.

15 ALUMINUM GUARDRAILS AND HANDRAILS WITH "CLEAR" ANODIZED ALUMINUM FINISHES. SUBMIT SHOP DRAWINGS AND CALCULATIONS FOR APPROVAL PRIOR TO MANUFACTURING AND INSTALLATION.

16 STRUCTURAL CONCRETE EYEBROW WITH "WHITE" SMOOTH STUCCO FINISH.

17 4" X 8" "CLEAR" ANODIZED ALUMINUM TUBE TO SUPPORT FUTURE MERCHANT SIGNAGE IN 12" HIGH CLEAR ANODIZED ALUMINUM LETTERS. SIGNAGE FONT TO BE DETERMINED BY ARCHITECT.

18 ALUMINUM HANDRAIL WITH "CLEAR" ANODIZED ALUMINUM FINISH. SUBMIT SHOP DRAWINGS AND CALCULATIONS FOR APPROVAL PRIOR TO MANUFACTURING AND INSTALLATION.

19 CLEAR ANODIZED ALUMINUM DOOR DRIP AS MANUFACTURED BY "PEMKO" 346C (40" OR 72") OR APPROVED EQUAL.

20 WALL MOUNTED LED LIGHT FIXTURE REFER TO REFLECTED CEILING PLANS AND ELECTRICAL DRAWINGS (TYPICAL WHERE SHOWN).

21 9'-0" TALL CLEAR ANODIZED HORIZONTAL BLADE LOUVER BOILER EQUIPMENT SCREEN (REFER TO STRUCTURAL DWG'S, ROOF PLAN AND 2/A-705).

1 KEY NOTES

SYNALOVSKI ROMANIK SAYE
Architecture • Planning • Interior Design
1800 Eller Drive, Suite 500
Fort Lauderdale, FL 33316
T 954.961.6806
F 954.961.6807
www.synalovski.com

Manuel Synalovski, AIA
AR 0011698
SEAL
LICENSE NO. AA26001863

LA LEE YMCA MIZELL COMMUNITY CENTER

1409 NW 6th STREET (SISTRUNK BOULEVARD)
FORT LAUDERDALE, FL 33311

CLIENT: YMCA SOUTH FLORIDA

REV	DATE	DESCRIPTION
1	05/10/19	DRC SIGN-OFF

DESIGN DELIVERABLE: 100% GMP BID SET
ISSUE DATE: 04/26/2019

PROJECT NUMBER: 1236-160227
DRAWN BY: CB
CHECKED BY: MS

Copyright (c) by SYNALOVSKI ROMANIK SAYE, LLC
All Rights Reserved.

SHEET TITLE:
BUILDING ELEVATIONS

SHEET NUMBER:
A-202

E:\1236-160227 YMCA Sistrunk\Drawings\A-202.dwg 6/6/2019 11:24:56 AM

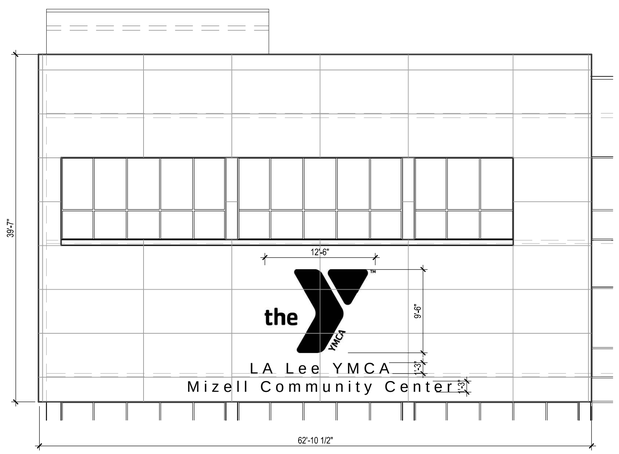

ALUMINUM CANOPY

WIRE RAILING AT GROUND FLOOR AND AROUND DECK AREAS

1

6 SIGNAGE DIMENSIONS

5 ARCHITECTURAL IMAGERY

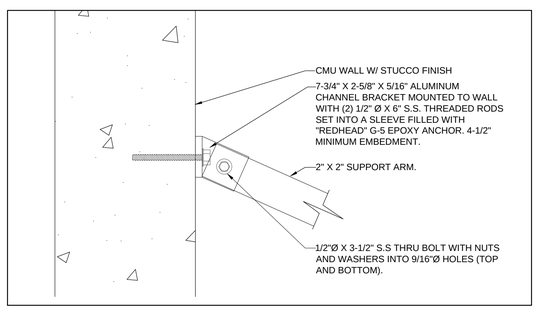

A

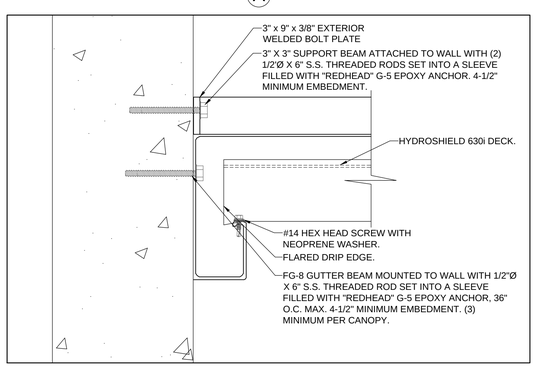

B

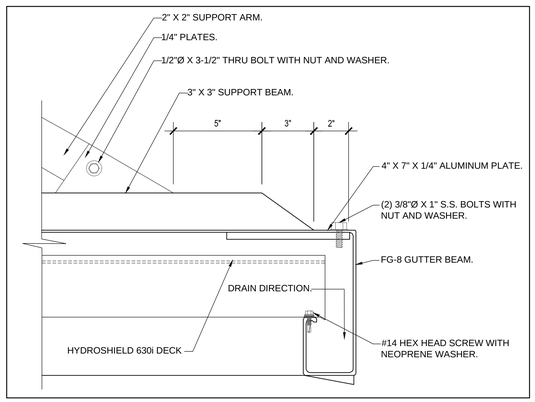

C

3 TYPICAL ALUMINUM CANOPY DETAILS

SCALE: 3" = 1'-0"

NOTE:
SUBMIT SHOP DRAWINGS FOR REVIEW AND APPROVAL BY ARCHITECT AND BLDG. DEPT. PRIOR TO INSTALLATION. SHOP DRAWINGS MUST BE SIGNED & SEALED BY A FLORIDA REGISTERED ENGINEER. ALL ENCLOSURES SHALL REIST 180 M.P.H. WIND LOADS. CONTRACTOR MAY SUBMIT ALTERNATE METHODS THAN THAT SHOWN FOR CONSIDERATION BY ARCHITECT OF RECORD.

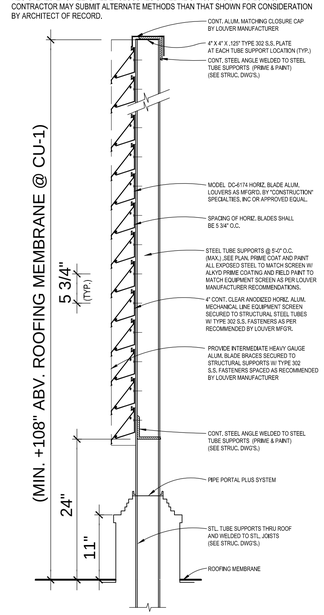

2 BOILER TANK EQUIPMENT SCREEN DETAIL

SCALE: 1" = 1'-0"

4 NOT USED

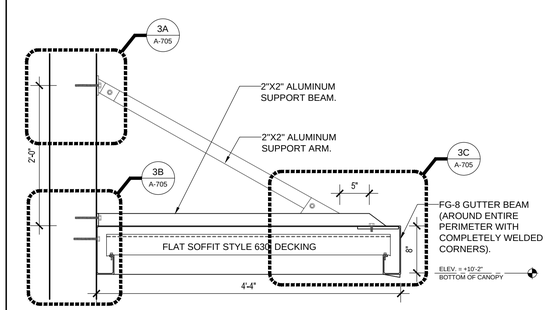

SUSPENDED CANOPY - SECTION
SCALE: 1"=1'-0"

1 BOILER TANK EQUIPMENT SCREEN DETAIL

SCALE: 1" = 1'-0"

SYNALOVSKI ROMANIK SAYE
Architecture • Planning • Interior Design

1800 Eller Drive, Suite 500
Fort Lauderdale, FL 33316

T 954.961.6806
F 954.961.6807

www.synalovski.com

Manuel Synalovski, AIA
AR 0011698
SEAL

LICENSE NO. AA26001863

LA LEE YMCA MIZELL COMMUNITY CENTER

1409 NW 6th STREET (SISTRUNK BOULEVARD)
FORT LAUDERDALE, FL 33311

CLIENT: YMCA SOUTH FLORIDA

REV	DATE	DESCRIPTION
1	05/10/19	DRC SIGN-OFF

DESIGN DELIVERABLE: DRC SUBMITTAL

ISSUE DATE: 04/01/2019

PROJECT NUMBER: 1236-160227

DRAWN BY: LH

CHECKED BY: MS

Copyright (c) by SYNALOVSKI ROMANIK SAYE, LLC
All Rights Reserved.

SHEET TITLE:

MISCELLANEOUS DETAILS

SHEET NUMBER:

A-705

E:\1236-160227 YMCA Sistrunk\Drawings\ESMP_A-700_DRC.dwg 6/6/2019 11:29:43 AM

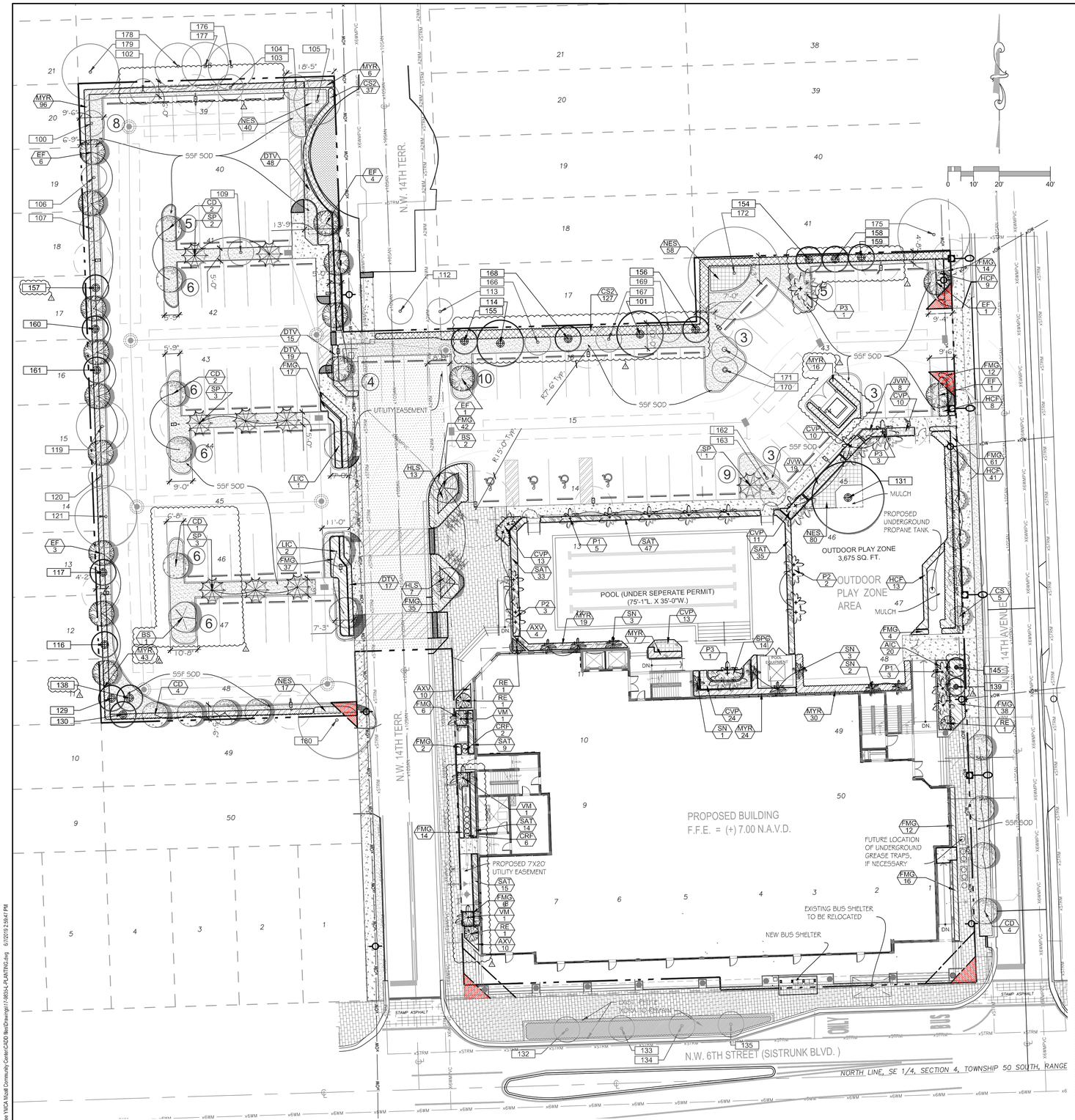

PLANT SCHEDULE

TREES	CODE	QTY	BOTANICAL / COMMON NAME	SIZE	SPEC.	
	BS	3	Bursera simaruba Gumbo Limbo	F.G. 3-1/2"Cal., 16`-18` HT x 6`-7` SPR		
	LIC	3	Lagerstroemia indica `Muskogee` Crape Myrtle	F.G. 2-1/2"Cal.,10` H.T x 4` SPR	Standard	
	P2	5	Ptychosperma elegans Alexander Palm	FG, 12`-14` OA, 8`-10` CT	Double	
	P1	8	Ptychosperma elegans Alexander Palm	FG, 12`-14` OA, 8`-10` CT	Single	
	P3	5	Ptychosperma elegans Alexander Palm	FG, 12`-14` OA, 8`-10` CT	Triple	
	RE	4	Rhapis excelsa Lady Palm (1) Shade Grown & (1) Partial Sun	25 G, 8`-10` HT x 4`-5` SPR, 3` CT		
	SN	9	Strelitzia nicolai White Bird of Paradise	7 G, 4`-5` HT.		
	VM	3	Veitchia montgomeryana Montgomery Palm Specimen, Matching	F.G. 14` -16` O.A. HT., 10`-12` C.T.	Single	
NATIVE TREES	CODE	QTY	BOTANICAL / COMMON NAME	SIZE	SPEC.	
	CD	13	Coccoloba diversifolia Pigeon Plum	F.G. 2-1/2"Cal.,10` H.T x 4` SPR	30" C.T.	
	CS	5	Conocarpus erectus `Sericeus` Silver Buttonwood	F.G. 2-1/2"Cal.,10` H.T x 4` SPR		
	EF	16	Eugenia foetida Spanish Stopper	25 G, 10`-12` HT x 3`-4` SPR, 2" C		
	SP	9	Sabal palmetto Cabbage Palmetto Staggered heights	F.G. 10`-16` C.T.,16`-22` O.A.HT.	Single	
SHRUBS	CODE	QTY	BOTANICAL / COMMON NAME	SIZE	SPEC.	SPACING
	CRF	8	Cordyline fruticosa `Red Sister` `Red Sister` Hawaiian Ti	7 G, 36" HT x 18" SPR		24" o.c.
SHRUB AREAS	CODE	QTY	BOTANICAL / COMMON NAME	SIZE	SPEC.	SPACING
	AIC	20	Acalypha wilkesiana Copper-Leaf	3 G, 24" HT X 24" SPR.	Full	30" o.c.
	AXV	24	Alpinia zerumbet `Variegata` Variegated Ginger	3 Gal., 18" HT X 18" SPR.	Full	24" o.c.
	CVP	81	Codiaeum variegatum `Petra` Petra Croton	3 Gal. 15" HT x 15" SPR.	Full	24" o.c.
	DTV	99	Dianella tasmanica `Variegata` Blueberry Flax Lily	3 G, 15" HT X 15" SPR		24" o.c.
	FMG	316	Ficus microcarpa `Green Island` Green Island Ficus	3 Gal. 15" HT x 15" SPR.		24" o.c.
	JVW	27	Jasminum volubile Wax Jasmine	3 Gal., 18" HT X 18" SPR.		24" o.c.
	SAT	153	Schefflera arboricola `Trinette` Variegated Dwaf Schefflera	3 Gal., 18" HT X 18" SPR.	Full	24" o.c.
	SPG	14	Spathoglottis Plicata Ground Orchid	3 Gal., 18" HT X 18" SPR.		24" o.c.
NATIVE SHRUB AREAS	CODE	QTY	BOTANICAL / COMMON NAME	SIZE	SPEC.	SPACING
	CS2	164	Clusia guttifera Small Leaf Clusia	15 G, 5` HT X 30" SPR		30" o.c.
	HCF	71	Hamelia patens `Compacta` Dwarf Fire Bush	3 Gal. 24"HT x 18" SPR.	Full	30" o.c.
	HLS	20	Hymenocallis latifolia Spider Lily	3 Gal. 24"HT x 18" SPR.		30" o.c.
	MYR	241	Myrcianthes fragrans `compacta` Simpson`s Stopper	15 G, 5` HT X 30" SPR	Full to ground	30" o.c.
NATIVE GROUND COVERS	CODE	QTY	BOTANICAL / COMMON NAME	SIZE	SPEC.	SPACING
	NES	195	Nephrolepis exaltata Boston Fern	1 G, 12" HT X 12" SPR.		18" o.c.
TURF & LAWN AREAS	CODE	QTY	BOTANICAL / COMMON NAME	SIZE	SPEC.	SPACING
	SSF	5,877 sf	Stenotaphrum secundatum St. Augustine Grass	Sod		

GENERAL NOTE: REFER TO LE1 & LE2 FOR EXISTING TREES INFORMATION.

REPLACEMENT CALCULATIONS

Common Name	Scientific Name	Qty.	Caliper	Total Caliper	Class Value	Caliper Value
Gumbo Limbo	Bursera Simaruba	3	3.5	10.5	A	$ 682.50
Crape Myrtle	Lagerstroemia Indica	3	2.5	7.5	C	$ 487.50
Pigeon Plum	Coccoloba diversifolia	13	2.5	32.5	A	$ 2,112.50
Silver Buttonwood	Conocarpus erectus	5	2.5	12.5	A	$ 812.50
Spanish Stopper	Eugenia foetida	16	2	32	A	$ 2,080.00
	Total	40		95		$ 6,175.00

PERMIT SET
PRELIMINARY NOT FOR CONSTRUCTION
ELEVATIONS SHOWN ARE NAVD 1988

SYNALOVSKI ROMANIK SAYE
Architecture · Planning · Interior Design

1800 Eller Drive, Suite 500
Fort Lauderdale, FL 33316

T 954.961.6806
F 954.961.6807

www.synalovski.com

MICHAEL CONNER, R.L.A.
STATE OF FLORIDA REGISTERED
LANDSCAPE ARCHITECT
LICENSE No. 1181

Calvin, Giordano & Associates, Inc.
EXCEPTIONAL SOLUTIONS
1800 Eller Drive, Suite 600, Fort Lauderdale, Florida 33316
Phone: 954.921.7781 • Fax: 954.921.8607

CERTIFICATE OF AUTHORIZATION LC339

LA LEE YMCA MIZELL COMMUNITY CENTER

1409 NW 6TH STREET (SISTRUNK BOULEVARD)
FORT LAUDERDALE, FL 33311

CLIENT: YMCA SOUTH FLORIDA

REV	DATE	DESCRIPTION
1	5-10-19	D.R.C. SIGN OFF
2	6-07-19	FINAL COMMENTS FROM KARL

DESIGN DELIVERABLE: **100% GMP BID SET**

ISSUE DATE: **05/21/2019**

PROJECT NUMBER: **1236-160227**

DRAWN BY: **M.A.**

CHECKED BY: **M.C.**

Copyright (c) by SYNALOVSKI ROMANIK SAYE
All Rights Reserved.

SHEET TITLE:

PLANTING PLAN AND SCHEDULE

SHEET NUMBER:

L-1

P:\Projects\2011\1795SS LA Lee YMCA Mizell Community Center\CADD files\Drawings\17-0853-L-PLANTING.dwg 6/7/2019 2:59:47 PM

SYNALOVSKI ROMANIK SAYE
Architecture • Planning • Interior Design

NARRATIVE

May 28th, 2019

Ms. Ella Parker, AICP, Urban Design & Planning Division
City of Fort Lauderdale
700 NW 19th Avenue
Fort Lauderdale, FL 33311

RE: LA LEE YMCA MIZELL COMMUNITY CENTER

Dear Ms. Parker,

The YMCA of South Florida, Inc. proposes the redevelopment of the City's Von D. Mizell Community Center located at 1409 NW 6th Street (Sistrunk Boulevard), the heart of the Fort Lauderdale North West Regional Activity Center.

For the past years, the Von D. Mizell Community Center has not been open to the Public in anticipation of required remodeling and renovations previously proposed by the City.

Since 1979 (± 40 Years) the YMCA of South Florida, Inc. has provided service to the Community at the LA Lee YMCA Family Center located at 408 NW 14th Terrace. This ± 14,285 SF facility on ± 1.61 Acres (70,268 SF) is approximately two (2) blocks South of the Von D. Mizell Community Center.

With the proposed redevelopment, the City's Von D. Mizell Community Center would become the LA Lee YMCA Mizell Community Center and all the "Y" activities at the LA Lee YMCA would be relocated to the new ± 71,737 SF Community Center.

The LA Lee YMCA Mizell Community Center is a proposed four (4) story sustainable facility fronting Sistrunk Boulevard. The proposed ± 22,330 SF building footprint replaces the existing ± 32,258 SF, two (2) story Von D. Mizell Community Center.

The proposed building is supported by 80 on-site surface parking spaces. These are unobtrusively located immediately to the North (behind) and West (interior block) of the building. Also, twenty-one (21) on-street public parking spaces are available within a block to the East and West along Sistrunk Boulevard.

SYNALOVSKI ROMANIK SAYE
Architecture • Planning • Interior Design
1800 Eller Drive, Suite 500 • Fort Lauderdale, FL 33316
T 954.961.6806 • F 954.961.6807 • www.synalovski.com

The proposed redevelopment fits neatly along the improved Sistrunk Boulevard and embraces the existing 10'-6" wide pedestrian sidewalks. An elevated colonnade, 8' deep fronting the full length (185') of the proposed building will provide shade for pedestrian traffic and serves as an elegant transition to the proposed ground floor retail activity along Sistrunk Boulevard.

The colonnade will also serve as shelter for mass transit patrons that use the two (2) existing Bus Stops serving the property. Additional Bus Stops to the East (2) and the West (2) also serve the Community.

Across the property, on Sistrunk Boulevard, the beautiful Provident Park provides a green oasis in the heart of Fort Lauderdale's Northwest Regional Activity Center. The passive park is strategically located at the cross lines of Sunrise Boulevard to the North, Broward Boulevard to the South, I-95 to the West and NW 7th Avenue to the East.

The program spaces for the proposed LA Lee YMCA Mizell Community Center are as follows:

Ground Floor (Mixed Use)
Outdoor Play Zone
Outdoor Pool and Deck
Pre-School
Retail/Commercial
Second Floor (Fitness/Wellness)
Gym/Lockers
YMCA Office
Wellness
Roof Plaza (± 2,000 SF)

Third Floor (community/Cultural)
Black Box Theatre
Aerobics
Youth Zone
Community Space

Fourth Floor (Educational)
Shared Work Space
School Board of Broward County
Broward College
Roof Plaza (± 2,600 SF)

Based on the above uses, the proposed hours of operation for the LA Lee YMCA Mizell Community Center are Monday – Friday, 5:00am – 10:00pm, Saturday 7:00am – 8:00pm and Sunday 12:00pm – 8:00pm.

Consistent with the Sistrunk Plan for the NW 6th Street Corridor, the YMCA is "looking to transform the area from a relatively underutilized resource to a bicycle and pedestrian friendly urban corridor that offers a mix of uses to serve the immediate Community and brings back the vibrant and thriving business, shopping, cultural and entertainment area it once was."

The proposed high quality building with minimal street setbacks provides light and air at the street level. Along Sistrunk Boulevard the Ground Floor Uses are active and interesting.

The proposed building massing, with the generous ground floor colonnade lined with glass and providing shade along the building façade, together with the Black Box Theatre block and Roof Plazas at the Second Floor and Fourth Floor provide a creative façade composition with attention to the street level and a gesture at the corner of the building length.

Existing landscape along the Boulevard Sidewalk and medians provide a visual marker at the street intersections to the East and West.

The proposed 7' and 8' setbacks along the adjoining Secondary Streets (NW 14th Terr./NW 14th Ave.) promote the continuity of the pedestrian experience and reduce the impact of the vehicular traffic by maintaining a consistent Street Wall.

The proposed building height of 58'-9 ½" is below the 60' maximum height allowed in the P Zoning District and lower than the 65' allowed in the NW-RACMUw Zoning District.

As it relates to applicable Sections of the ULDR, following are the compliant standards:

- Indoor Recreational Facilities, Civic Facilities, Cultural Facilities and Educational Facilities are Permitted Uses.
- Rear Setback is 127'-3" in lieu of 44' (25' + 19': 1' for each 1' above 40')
- Building Height is 58'-9 ½' in lieu of 60'-0"
- No minimum lot size, no minimum lot width, no maximum FAR and no maximum gross floor area is required

The proposed Public Use resonates because there is no other facility of this kind in the City. The location at the heart of the North West Regional Activity Center is privileged. The mix of uses is responsive to the needs and demands of the Community. The economic impact as a catalyst for redevelopment is absolute.

The environmental impact on the area is irrelevant. The removal of blight in the area is certain.
The compatibility with the NWRAC-MUw District is extraordinary.

As it relates to the applicable Sections of the ULDR, following are the non-compliant standards:

- Front Setback is 1' in lieu of 25'
- Minimum 5' (high) dense landscape buffer in lieu of 5'(high) wall at Vehicular Use Areas
- Perimeter Landscape Buffer is 5'(minimum) in lieu of 10' at Vehicular Use Areas
- Required 76 on-site parking spaces in lieu of 161 on-site parking spaces (non-concurrent parking matrix)
- Parking Spaces are 5'(minimum) from the property line in lieu of 12'

As it relates to neighborhood compatibility, the proposed project meets all the requirements with the exception of the buffer yards. Nonetheless, the existing buffer yards are being improved tremendously in order to equal the intent of the required buffer yards and not reduce the on-site parking provided.

Should you have any questions or require additional information, please do not hesitate to contact me.

Respectfully,

Manuel Synalovski, AIA, NCARB, LEED AP
Managing Principal

Applicant:
YMCA of South Florida, Inc.
Owner:
City of Fort Lauderdale
Project:
LA Lee YMCA Mizell Community Center

April 22, 2019

ADEQUACY REQUIREMENTS NARRATIVE

Sec. 47-25.2. Adequacy requirements.

A. ***Applicability.*** The adequacy requirements set forth herein shall be used by the city to evaluate the demand created on public services and facilities created by a proposed development permit.

B. ***Communications network.*** Buildings and structures shall not interfere with the city's communication network. Developments shall be modified to accommodate the needs of the city's communication network, to eliminate any interference a development would create or otherwise accommodate the needs of the city's communication network within the development proposal.

Response: Applicant's building is 4-stories in height and is not expected to interfere with the City's communication network.

C. ***Drainage facilities.*** Adequacy of stormwater management facilities shall be evaluated based upon the adopted level of service requiring the retention of the first inch of runoff from the entire site or two and one-half (2 1/2) inches of runoff from the impervious surface whichever is greater.

Response: Application shall be made to Broward County for approval of the Project's stormwater management facilities.

D. ***Environmentally sensitive lands.***
1. In addition to a finding of adequacy, a development shall be reviewed pursuant to applicable federal, state, regional and local environmental regulations. Specifically, an application for development shall be reviewed in accordance with the following Broward County Ordinances which address environmentally sensitive lands and well field protection which ordinances are incorporated herein by reference:

a. Broward County Ordinance No. 89-6.
Response: N/A. This Ordinance addresses Natural Resource Areas. The Property is not designated as a Natural Resource Area. Therefore, this ordinance is not applicable.

b. Section 5-198(I), Chapter 5, Article IX of the Broward County Code of Ordinances.
Response: N/A. This section of the Broward County Land Development Code addresses Trafficways (not environmentally sensitive lands).

c. Broward County Ordinance No. 84-60.
Response: N/A. This Ordinance addresses potable water supply and wellfield protection. The Property is not designated nor is it located near a wellfield zone.

2. The applicant must demonstrate that impacts of the proposed development to environmentally sensitive lands will be mitigated.

E. ***Fire protection.*** Fire protection service shall be adequate to protect people and property in the proposed development. Adequate water supply, fire hydrants, fire apparatus and facilities shall be provided in accordance with the Florida Building Code, Florida Fire Prevention Code and other accepted applicable fire and safety standards.

Response: Acknowledged and Applicant will comply.

F. ***Parks and open space.*** *New park impact fee ordinance adopted in June 2006.*

Response: N/A

G. ***Police protection.*** Police protection service shall be adequate to protect people and property in the proposed development. The development shall provide improvements which are consistent with Crime Prevention through Environmental Design (CPTED) to minimize the risk to public safety and assure adequate police protection.

Response: Applicant's design incorporates CPTED principles to minimize risk to public safety and assure adequate police protection.

H. ***Potable water.***
1. Adequate potable water service shall be provided for the needs of the proposed development. The proposed development shall be designed to provide adequate areas and easements which may be needed for the installation and maintenance of potable water systems in accordance with city engineering standards, the Florida Building Code, and applicable health and environmental regulations. The existing water treatment facilities and systems shall have sufficient capacity to provide for the needs of the proposed development and for other developments in the service area which are occupied, available for occupancy, for which building permits are in effect or for which potable water treatment capacity has been reserved. Capital expansion charges for water and sewer facilities shall be paid by the developer in accordance with Resolution 85-265, as it is amended from time to time. Improvements to the potable water service and system shall be made in accordance with city engineering standards and other accepted applicable engineering standards.

2. *Potable water facilities.*
   a. If the system is tied into the city treatment facility, the available capacity shall be determined by subtracting committed capacity and present flow from design capacity. If there is available capacity, the city shall determine the impact of the proposed development utilizing Table 3, Water and Wastewater, on file with the department.
   b. If there is adequate capacity available in the city treatment plant to serve the proposed development, the city shall reserve the necessary capacity to serve the development.
c. Where the county is the projected service provider, a similar written assurance will be required.

Response: Water mains exist adjacent to the site. See Civil drawings for connection details.

I. ***Sanitary sewer.***
1. If the system is tied into the city treatment facility, the available capacity shall be determined by subtracting committed capacity and present flow from the design capacity. If there is available capacity, the city shall determine the impact of the proposed development utilizing Table 3, Water and Wastewater, on file with the department.
2. If there is adequate capacity available in the city treatment plant to serve the proposed development, the city shall reserve the necessary capacity to serve the proposed development.
3. Where the county is the projected service provider, a written assurance will be required.
4. Where septic tanks will be utilized, the applicant shall secure and submit to the city a certificate from the Broward County Health Unit that certifies that the site is or can be made suitable for an on-site sewage disposal system for the proposed use.

Response: Acknowledged and Applicant will comply. See Civil drawings.

J. ***Schools.*** For all residential plats, the applicant shall contribute to school facilities in accordance with the Broward County Land Development Code and shall provide documentation to the city that such contribution has been satisfied.

Response: N/A

K. ***Solid waste.***
1. Adequate solid waste collection facilities and service shall be obtained by the applicant in connection with the proposed development and evidence shall be provided to the city demonstrating that all solid waste will be disposed of in a manner that complies with all governmental requirements.
2. *Solid waste facilities.* Where the city provides solid waste collection service and adequate service can be provided, an adequacy finding shall be issued. Where there is another service provider, a written assurance will be required. The impacts of the proposed development will be determined based on Table 4, Solid Waste, on file with the department.

Response: Applicant will be contracting with a solid waste hauler for solid waste. Dumpsters will be provided on site for users occupying the building.

L. ***Stormwater.*** Adequate stormwater facilities and systems shall be provided so that the removal of stormwater will not adversely affect adjacent streets and properties or the public stormwater facilities and systems in accordance with the Florida Building Code, city engineering standards and other accepted applicable engineering standards.

Response: Stormwater will be retained on site in accordance with all City, County, and State stormwater retention standards.

M. ***Transportation facilities.***
1. The capacity for transportation facilities shall be evaluated based on Table 1, Generalized Daily Level of Service Maximum Volumes, on file with the department. If a development is within a compact deferral area, the available traffic capacity shall be determined in accordance with Table 2, Flowchart, on file with the department.

2. *Regional transportation network.* The regional transportation network shall have the adequate capacity, and safe and efficient traffic circulation to serve the proposed development. Adequate capacity and safe and efficient traffic circulation shall be determined by using existing and site-specific traffic studies, the adopted traffic elements of the city and the county comprehensive plans, and accepted applicable traffic engineering standards. Site-specific traffic studies may be required to be made and paid for by the applicant when the city determines such a study is needed in order to evaluate the impacts of the proposed development on proposed or existing roadways as provided for in subsection M.4. An applicant may submit such a study to the city which will be considered by the DRC in its review. Roadway improvements needed to upgrade the regional transportation network shall be made in accordance with the city, the county, and Florida Department of Transportation traffic engineering standards and plans as applicable.

3. *Local streets.* Local streets shall have adequate capacity, safe and efficient traffic circulation, and appropriate functional classification to serve the proposed development. Adequate capacity and safe and efficient traffic circulation shall be determined by using existing and site-specific traffic studies, the city's comprehensive plan and accepted applicable traffic engineering standards. Site-specific traffic studies may be required to be made and paid for by the applicant when the city determines such a study is required in order to evaluate the impact of the proposed development on proposed or existing roadways as provided for in subsection M.4. An applicant may submit to the city such a study to be considered as part of the DRC review. Street improvements needed to upgrade the capacity or comply with the functional classification of local streets shall be made in accordance with the city engineering standards and acceptable applicable traffic engineering standards. Local streets are those streets that are not classified as federal, state or county roadways on the functional classification map adopted by the State of Florida.

4. *Traffic impact studies.*

a. When the proposed development may generate over one thousand (1,000) daily trips; or

b. When the daily trip generation is less than one thousand (1,000) trips; and (1) when more than twenty percent (20%) of the total daily trips are anticipated to arrive or depart, or both, within one-half (1/2) hour; or (2) when the proposed use creates varying trip generation each day, but has the potential to place more than twenty percent (20%) of its maximum twenty-four (24) hour trip generation onto the adjacent transportation system within a one-half (1/2) hour period; the applicant shall submit to the city a traffic impact analysis prepared by the county or a registered Florida engineer experienced in traffic ways impact analysis which shall:

i. Provide an estimate of the number of average and peak hour trips per day generated and directions or routes of travel for all trips with an external end.

ii. Estimate how traffic from the proposed development will change traffic volumes, levels of service, and circulation on the existing and programmed traffic ways.

iii. If traffic generated by the proposed development requires any modification of existing or programmed components of the regional or local traffic ways, define what city, county or state agencies have programmed the necessary construction and how this programming relates to the proposed development.

iv. A further detailed analysis and any other information that the review committee considers relevant.

v. The traffic impact study may be reviewed by an independent licensed professional engineer contracted by the city to determine whether it adequately addresses the impact and the study supports its conclusions. The cost of review by city's consultant shall be reimbursed to the city by the applicant.

vi. When this subsection M.4.b. applies, the traffic study shall include an analysis of how the peak loading will affect the transportation system including, if necessary, an operational plan showing how the peak trips will be controlled and managed.

Response: Applicant has provided a traffic statement by its traffic consultant.

5. ***Dedication of rights-of-way.*** Property shall be conveyed to the public by plat, deed or grant of easement as needed in accordance with the Broward County Trafficways Plan, the city's comprehensive plan, subdivision regulations and accepted applicable traffic engineering standards.

Response: If additional right-of-way is required, Applicant will dedicate the same by deed or easement.

6. ***Pedestrian facilities.*** Sidewalks, pedestrian crossing and other pedestrian facilities shall be provided to encourage safe and adequate pedestrian movement on-site and along roadways to adjacent properties. Transit service facilities shall be provided for as required by the city and Broward County Transit. Pedestrian facilities shall be designed and installed in accordance with city engineering standards and accepted applicable engineering standards.

Response: Sidewalks abutting the development have been provided and comply with the street sections of the Northwest Regional Activity Center Master Plan.

7. ***Primary arterial street frontage.*** Where a proposed development abuts a primary arterial street either existing or proposed in the trafficways plan, the development review committee (DRC) may require marginal access street, reverse frontage with screen planting contained in a nonaccess reservation along the rear property line, deep lots with or without rear service alleys, or such other treatment as may be necessary for adequate protection of residential properties and to assure separation of through and level traffic.

Response: Acknowledged.

8. ***Other roadway improvements.*** Roadways adjustments, traffic control devices, mechanisms, and access restrictions may be required to control traffic flow or divert traffic, as needed to reduce or eliminate development generated traffic.

Response: Acknowledged.

9. ***Street trees.*** In order to provide for adequate landscaping along streets within the city, street trees shall be required along the length of the property abutting a street. A minimum of fifty percent (50%) of the required street trees shall be shade trees, and the remaining street trees may be provided as flowering or palm trees. These percentages may be varied based on existing or proposed physical conditions which may prevent the ability to comply with the street tree requirements of this subsection. The street trees shall be planted at a minimum height and size in accordance with the requirements of Section 47-21, Landscape and Tree Preservation Requirements, except in the downtown RAC districts the requirements of Sec. 47-13.20.H.8 shall apply. The location and number of street trees shall be determined by the department based on the height, bulk, mass and design of the structures on the site and the proposed development's compatibility to surrounding properties. The requirements for street trees, as provided herein, may be located within the public right-of-way as approved by the entity with jurisdiction over the abutting right-of-way.

Response: Street trees have been provided on street frontages.

N. ***Wastewater.***

1. *Wastewater.* Adequate wastewater services shall be provided for the needs of the proposed development. The proposed development shall be designed to provide adequate areas and easements which may be needed for the installation and maintenance of a wastewater and disposal system in accordance with applicable health, environmental and engineering regulations and standards. The existing wastewater treatment facilities and systems shall have adequate capacity to provide for the needs of the proposed development and for other developments in the service area which are occupied, available for occupancy, for which building permits are in effect or for which wastewater treatment or disposal capacity has been reserved. Capital expansion charges for water and sewer facilities shall be paid by the developer in accordance with Resolution 85-265, as it is amended for time to time. Improvements to the wastewater facilities and system shall be made in accordance with the city engineering and accepted applicable engineering standards.

Response: Sewer mains exist adjacent to the site. See Civil Plans for connection details.

O. ***Trash management requirements.*** A trash management plan shall be required in connection with non-residential uses that provide prepackaged food or beverages for off-site consumption. Existing non-residential uses of this type shall adopt a trash management plan within six (6) months of the effective date of this provision.

Response: Acknowledged.

P. ***Historic and archaeological resources.***

1. If a structure or site has been identified as having archaeological or historical significance by any entity within the State of Florida authorized by law to do same, the applicant shall be responsible for requesting this information from the state, county, local governmental or other entity with jurisdiction over historic or archaeological matters and submitting this information to the city at the time of, and together with, a development permit application. The reviewing entity shall include this information in its comments.

Response: This site does not have any historical or archaeological significance.

Q. ***Hurricane evacuation.*** If a structure or site is located east of the Intracoastal Waterway, the applicant shall submit documentation from Broward County or such agency with jurisdiction over hurricane evacuation analysis either indicating that acceptable level of service of hurricane evacuation routes and hurricane emergency shelter capacity shall be maintained without impairment resulting from a proposed development or describing actions or development modifications necessary to be implemented in order to maintain level of service and capacity.

Response: N/A. Project is not located east of the Intracoastal Waterway.

Applicant:
YMCA of South Florida, Inc.
Owner:
City of Fort Lauderdale
Project:
LA Lee YMCA Mizell Community Center

December 11, 2018

NEIGHBORHOOD COMPATIBILITY NARRATIVE
ULDR § 47-25.3

Sec. 47-25.3. Neighborhood compatibility requirements.

A. The neighborhood compatibility requirements are as follows:

1. *Adequacy requirements.* See Sec. 47-25.2.

Response: Applicant has provided a separate point-by-point narrative addressing the Adequacy Requirements.

2. *Smoke, odor, emissions of particulate matter and noise.*
   a. Documentation from the Broward County Department of Natural Resource Protection (DNRP) or a report by a certified engineer, licensed in the State of Florida, that the proposed development will not exceed the maximum levels of smoke, odor, emissions of particulate matter and noise as regulated by Chapter 27, Pollution Control, of the Code of Broward County, and that a DNRP permit for such facility is not required.
   b. Where a DNRP license is required in accordance with Chapter 27, Pollution Control, of the Code of Broward County, all supporting documentation and information to obtain such permit shall be submitted to the DRC as part of a site plan review.
   c. Such DNRP licenses shall be required to be issued and copies provided to the city prior to the issuance of a building permit for the proposed development.

Response: To the extent any DPEP (formerly DNRP) permits are needed, applicant will apply for and obtain such permits.

3. *Design and performance standards.*
   a. *Lighting.* No lighting shall be directed from a use which is subject to the requirements of this Sec. 47-25.3 in a manner which illuminates abutting residential property and no source of incandescent or mercury vapor illumination shall be directly visible from any abutting residential property. No neon lights inside or outside structures shall be visible from any abutting residential property.
      i. Glare. Any nonresidential operation or activity producing glare shall be conducted so that direct or indirect illumination of light shall not cause illumination in excess of one (1) foot candle on any abutting residential property except as provided in subsection iii. of this subsection a.

ii. Control of effects of lights from automobiles or other sources. Where the site plan indicates potential adverse effects of parking or of other sources on the lot on which the nonresidential use is to be located, such effects shall be eliminated or at a minimum prevented so that lights do not illuminate adjacent residential property below a height of five (5) feet at the residential lot line, or from shining into any residential window if there is to be nonresidential parking on the premises after dark.

iii. In addition to the above, parking lots and garages will be subject to the provisions of Sections 47-20.14 and if in conflict with the provisions of this section, the more restrictive provisions shall apply.

Response: Acknowledged and Applicant will comply. See photometric plan for details.

b. *Control of appearance.* The following design standards are provided to protect the character of abutting residential areas from the visual impact which may result from a use which is subject to the requirements of this Sec. 47-25.3.

i. *Architectural features.* The facade of any side of a nonresidential building facing the residential property shall be constructed to compliment a residential structure and shall include the following:

a) Fenestration such as windows, doors and openings in the building wall; and

b) Shall contain a minimum of one (1) feature from each of the following architectural feature groups with a total of four (4) architectural features from the following list:

1. Detail and embellishments:
    a. Balconies,
    b. Color and material banding,
    c. Decorative metal grates over windows,
    d. Uniform cornice heights,
    e. Awnings.
2. Form and mass:
    a. Building mass changes including projection and recession,
    b. Multiple types and angles of roofline, or any combination thereof.

c) The above required facade treatment shall be required to continue around the corner onto the adjoining wall for a distance of twenty (20) feet.

Response: The Project incorporates Roof Plazas, a Ground Floor Colonnade, Tinted Glazing, Accent Colors, Covered Canopies and a creative façade composition. The building mass is articulated and roof lines provide an elegant appearance that protect the character of the abutting Community.

ii. *Loading facilities.* Loading and service facilities shall be screened so as not to be visible from abutting residential uses or vacant residential zoned property.

Response: Applicant is providing an internalized service area for loading.

iii. *Screening of rooftop mechanical equipment.* All rooftop mechanical equipment, stair and elevator towers shall be designed as an integral part of the building volume

and/or adequately screened so that they are not visible from abutting residential uses or vacant residential zoned property.

Response: All rooftop equipment will be adequately screened.

c. *Setback regulations.* When a nonresidential use which is subject to the requirements of this Sec. 47-25.3 is contiguous to any residential property, there shall be an additional setback required for any yard of that use which is contiguous to the residential property, as follows:

i. When any side of a structure greater in height than forty (40) feet is contiguous to residential property, that portion of the structure shall be set back one (1) foot for each one (1) foot of building height over forty (40) feet up to a maximum width equal to one-half (1/2) the height of the building, in addition to the required setback, as provided in the district in which the proposed nonresidential use is located.

Response: The Project is providing a setback of 127'-10" in lieu of 44' towards the existing residential use to the North.

d. *Bufferyard requirements.* When a use which is subject to the requirements of this Sec. 47-25.3 is contiguous to any residential property, the property where the use is located shall be required to have a landscaped strip area and a physical barrier between it and the residential property. Such landscape strip shall meet the following requirements:

i. *Landscape strip requirements.* A ten (10) foot landscape strip shall be required to be located along all property lines which are adjacent to residential property. Such landscape strip shall include trees, shrubs and ground cover as provided in the landscape provisions of Section 47-21, Landscape and Tree Preservation Requirements. The width of the landscape area shall extend to the property line. All required landscaping shall be protected from vehicular encroachment. When walls are required on nonresidential property abutting an alley, required shrubbery shall be installed and located within the landscape area on the exterior of the wall.

Response: The project is improving all existing landscaping. A robust landscape plan replaces a "transparent" landscape buffer/edge. See the proposed landscape plans for details.

ii. *Parking restrictions.* No parking shall be located within twelve (12) feet of the property line, within the yard area required by the district in which the proposed nonresidential use is located, when such yard is contiguous to residential property.

Response: The Project is improving all existing on-site parking areas. Applicant is applying for a public purpose use designation that deviates from this requirement. Nonetheless, the robust landscape plan replaces an existing "transparent" landscape buffer/edge. See the proposed landscape plans for details.

iii. *Dumpster regulations.* All solid waste refuse containers (dumpsters) shall be set back a minimum of twelve (12) feet from any property line which is contiguous to residential property, and shall be screened in accordance with the Dumpster requirements, as provided in Section 47-19, Accessory Uses, Buildings and Structures.

Response: Acknowledged and Applicant will comply.

iv. *Wall requirements.* A wall shall be required on the nonresidential property, a minimum of five (5) feet in height, constructed in accordance with Section 47-19.5 and subject to the following:

a) Decorative features shall be incorporated on the residential side of such wall according to the requirements of Section 47-19.5

b) Shall be located within, and along the length of the property line which abuts the residential property,

c) When the nonresidential property is located adjacent to an alley such wall shall be located at least five (5) feet from the right-of-way line located closest to the nonresidential property,

d) When a utility, or other public purpose easement, on the nonresidential property precludes the construction of a wall, then an opaque fence, constructed in accordance with the standards described in Section 47-19.5, may be erected in lieu of the wall required by subsection iv. above. The use of an opaque fence as a physical barrier between nonresidential and residential property shall be reviewed and recommended by the city engineer.

Response: The Project is improving all existing landscaping. A robust landscape plan replaces an existing "transparent" landscape buffer edge. This buffer is being provided in lieu of a 5' wall.

v. *Application to existing uses.* Within five (5) years ….(remainder of this subsection v. is intentionally omitted).

e. *Neighborhood compatibility and preservation.* In addition to the review requirements provided in subsections A.1, A.2 and A.3.a, b, c, and d, the following review criteria shall also apply as provided below:

i. All developments subject to this Sec. 47-25.3 shall comply with the following:

a) Development will be compatible with, and preserve the character and integrity of adjacent neighborhoods, the development shall include improvements or modifications either on-site or within the public rights-of-way to mitigate adverse impacts, such as traffic, noise, odors, shadow, scale, visual nuisances, or other similar adverse effects to adjacent neighborhoods. These improvements or modifications may include, but shall not be limited to, the placement or orientation of buildings and entryways, parking areas, buffer yards, alteration of building mass, and the addition of landscaping, walls, or both, to ameliorate such impacts. Roadway adjustments, traffic control devices or mechanisms, and access restrictions may be required to control traffic flow or divert traffic as needed to reduce or eliminate development generated traffic on neighborhood streets.

Response: The neighborhood is characterized by a mixture of uses consisting of residential, offices, retail, restaurants and a houses of worship. The proposed use of the Property for a Community Center is consistent with and compatible with the pattern of development in this area. The Project was designed to improve the "urban feel" in order to foster public interaction with the neighborhood. By designing the project in this

manner, the development becomes an integral component of the neighborhood rather than an isolated addition to the neighborhood. The Project provides many design aspects that improve the quality of the neighborhood while at the same time mitigating development impacts. These design aspects are discussed throughout this narrative but several are highlighted below. In an effort to mitigate any perceived adverse impacts such as traffic, noise, odors, shadow, scale, visual nuisances, or other similar adverse effects to adjacent neighborhoods, the project incorporates the following improvements or modifications:

<u>Building placement and alteration of building mass</u>. The project is located in the Northwest Regional Activity Center future land use area. The design is sensitive to the surrounding neighborhood and will be only 4 stories tall. Keeping the building to this height mitigates shadow, scale, and mass. Additionally, the fact that the building design is made of several roof plazas provides a break-up in massing.

Applicant is proposing the following improvements to the neighborhood:

- **Elevated Colonnade**
- **Retail Activity along Sistrunk Boulevard**
- **A Community Pool**
- **A Community Black Box Theatre/assembly area**
- **A Community Pre-School**
- **An Academic Floor with Broward College Presence and the School Board of Broward County Presence**

b) Consideration shall be given to the recommendations of the adopted neighborhood master plan in which the proposed development is to be located, or which it abuts, although such neighborhood master plan shall not be considered to have the force and effect of law. When recommended improvements for the mitigation of impacts to any neighborhood, conflicts with any applicable ULDR provision, then the provisions of the ULDR shall prevail. In order to ensure that a development will be compatible with, and preserve the character and integrity of adjacent neighborhoods, the development shall include improvements or modifications either on-site or within the public rights-of-way to mitigate adverse impacts, such as traffic, noise, odors, shadow, scale, visual nuisances, or other similar adverse effects to adjacent neighborhoods. These improvements or modifications may include, but shall not be limited to, the placement or orientation of buildings and entryways, parking areas, buffer yards, alteration of building mass, and the addition of landscaping, walls, or both, to ameliorate such impacts. Roadway adjustments, traffic control devices or mechanisms, and access restrictions may be required to control traffic flow or divert traffic as needed to reduce or eliminate development generated traffic on neighborhood streets.

Response: Applicant has provided a separate narrative addressing the fabric and context of the Sistrunk Boulevard Corridor and the Northwest Community.

The proposed redevelopment fits neatly along the improved Sistrunk Boulevard and embraces the existing 10'-6" wide pedestrian sidewalks. An elevated colonnade, 8'

deep fronting the full length (185') of the proposed building will provide shade for pedestrian traffic and serves as an elegant transition to the proposed ground floor retail activity along Sistrunk Boulevard.

The colonnade will also serve as shelter for mass transit patrons that use the two (2) existing Bus Stops serving the property. Additional Bus Stops to the East (2) and the West (2) also serve the Community.

Across the property, on Sistrunk Boulevard, the beautiful Provident Park provides a green oasis in the heart of Fort Lauderdale's Northwest Regional Activity Center. The passive park is strategically located at the cross lines of Sunrise Boulevard to the North, Broward Boulevard to the South, I-95 to the West and NW 7th Avenue to the East.

The above design elements are incorporated into the project to make the Project compatible with not only the existing developments in the neighborhood, but to also provide some level of consistency with future development which may occur in this neighborhood.

ii. All development within the RAC-TMU (RAC-EMU, RAC-SMU and RAC-WMU) district that is greater in density than twenty-five (25) dwelling units per net acre:

a) In addition to meeting the review requirements of subsection A.3.e.i, building sites within the RAC-TMU (RAC-EMU, RAC-SMU and RAC-WMU) district shall be eligible to apply for additional dwelling units over and above twenty-five (25) dwelling units per net acre, provided such additional dwelling units are available for distribution in the downtown regional activity center. However, in order to obtain such additional dwelling units, a site plan level II permit must be approved. Such approval shall be based upon consideration of the number of additional dwelling units available under the city land use plan, the number of additional dwelling units requested, the impact of the proposed development on abutting residential areas, the proposed residential density of the proposed development, location of the proposed development, the sensitivity to adjacent development of the site design and proposed orientation of the proposed development (including proposed setbacks), pedestrian movements associated with the proposed development, proposed landscaping, and traffic and parking impacts of the proposed development on the transportation network. Approval for allocations of any additional dwelling units, hotel rooms or both, for multifamily dwellings, hotels and mixed-use developments shall conform to the city's land use plan and may be granted subject to approval of a site plan level II permit, subject to the considerations for such review as prescribed above. A minimum setback of twenty (20) feet from all property lines for every building used exclusively for residential purposes may be required. Such minimum setback may also be required for mixed use buildings in which residential use exceeds fifty-nine percent (59%) of the total floor area, exclusive of parking garages.

Response: N/A

iii. All development within any downtown RAC district that is within one hundred (100) feet of residential property that is located outside of any downtown RAC district and all development within the RAC-TMU (RAC-EMU, RAC-SMU and RAC-WMU) district; and all development that is located on land adjacent to the New River within the RAC-AS and RAC-CC which deviates from the New River corridor requirements as provided in Section 47-13, Downtown Regional Activity Center:

a) In addition to meeting the review requirements of subsection A.3.e.i, the setbacks imposed for a development plan may be modified subject to the requirements provided as follows:

1. No structure, or part thereof, shall be erected or used, or land or water used, or any change of use consummated, nor shall any building permit or certificate of occupancy be issued therefor, unless a development plan for such structure or use shall have been reviewed and approved, where applicable, after development review as prescribed in subsection A.3.e.i. In approving such development plan, consideration shall be given to the location, size, height, design, character and ground floor utilization of any structure or use, including appurtenances; access and circulation for vehicles and pedestrians, streets, open spaces, relationship to adjacent property, proximity to New River and other factors conducive to development and preservation of a high quality downtown regional activity center district. No approval shall be given to the setbacks shown on the development plan unless a determination is made that the setbacks conform to all applicable provisions of the ULDR, including the requirements of Section 47-13, Downtown Regional Activity Center Districts, that the safety and convenience of the public are properly provided for and that adequate protection and separation are provided for contiguous property and other property in the vicinity. Approval of the setbacks of a development plan may be conditioned by imposing one (1) or more setback requirements exceeding the minimum requirements.

Response: N/A. The Project is not located in a downtown RAC district.

Applicant:
YMCA of South Florida, Inc.
Owner:
City of Fort Lauderdale
Project:
LA Lee YMCA Mizell Community Center

May 28, 2019

NARRATIVE ADDRESSING
PUBLIC PURPOSE CRITERIA
ULDR 47-18.26

ULDR Sec. 47-18.26 Public purpose uses.

A. Any provision to the contrary notwithstanding, publicly owned structures may be erected and lands used for public purposes, in any zoning district in the city unless prohibited by the city comprehensive plan; provided, however, no building or use permit shall be issued by the city for any such plans, locations or use without the prior approval of the city commission as provided herein.

Response: The proposed YMCA facility, located at 1409 NW 6th Street, is in the Northwest Regional Activity Center ("NWRAC") future land use area. Community facilities such as the YMCA are permitted in the NWRAC under the City's comprehensive plan. The City Commission, pursuant to the least agreement dated August 22, 2017 by and between the City and the YMCA, has determined that the proposed uses and structure of the project serve a public purpose.

B. Consideration of the approval of a use or structure for public purposes which requires relief from a zoning regulation of the city shall be initiated by filing an application for approval with the department by the property owner or the person or entity wishing to use the property for a public purpose.

Response: Acknowledged. Applicant submitted an application concurrent with this narrative for approval of the proposed public purposes and consistent with the lease agreement dated August 22, 2017 by and between the City and the YMCA. A detailed list of zoning regulations that require relief are identified herein.

C. An application for a public use or structure shall include:

1. A conceptual site plan showing the size and location of all structures on or to be located on the property, including but not limited to elevations, location of vehicular and pedestrian ingress and egress, landscaping and floor plans. If the public purpose is to utilize property as a social service residential facility, the site plan shall show how the use or structure meets the requirements of Sec. 47-18.32;

Response: Applicant has provided a site plan, landscape plans, floor plans and building elevations. Areas for vehicular and pedestrian ingress and egress are depicted on the plans. The project is not a social service residential facility.

2. A legal description of the property;

Response: Refer to the Survey of the property which is included in the plan submittal.

2. A description of the zoning regulation from which relief is necessary to conduct the public use or construct the public structure;

Response: The lease between the YMCA and the City states that the YMCA must develop a 65,000 square foot facility consisting of various amenities and programs. In order to develop a 65,000 square foot facility on the property, the Applicant is requesting relief from certain development requirements of the ULDR as detailed below.

ULDR Section 47.8.30: Front Setback is 1' in lieu of 25'
East side setback is 8' in lieu of 25'
West side setback is 7' in lieu of 25'

ULDR Section 47.19.5: Minimum 5' high dense landscape buffer in lieu of 5' wall at Vehicular Use Areas

ULDR Section 47.21: Perimeter Landscape Buffer is 5'(minimum) in lieu of 10' at Vehicular Use Areas

ULDR Section 47.20.2: Minimum 80 on-site parking spaces (see parking matrix)

ULDR Section 47.20.2: No Loading Zone Provided

ULDR Section 47.25.3: Parking spaces are 5'(minimum) from the property line (existing condition)

ULDR Section 47.20.5c.4: Existing Dead End Remains

ULDR Section 47.25.3: Existing Buffer Yards Remain

ULDR Section 47.21.12.A.4.d: Reduced Landscape Island Provided (see landscape plans)

ULDR Section 47.21.12.B.4: No Curbed Landscape Island Provided (see landscape plans)

ULDR Section 47.21.13.B.16: No New Swale Trees Provided (see landscape plans)

ULDR Section 47.20.5: Existing Stacking Remains (see civil and site plans)

4. A description of the need for the public use or structure including a description of other similar uses or structures and their locations in the city;

Response: In the City's lease agreement with the YMCA, entered into on August 22, 2017 and included with this submission, the City Commission found that "[YMCA's] activities serve a significant public purpose and [the City] wishes to encourage and assist same." The existing LA Lee YMCA Family Center (±14,285 SF) is outdated and does not properly respond to the needs of the City's Northwest Community. With this new project, the existing YMCA would become the LA Lee YMCA Mizell Community Center and all of the YMCA activities at the existing LA Lee YMCA would be relocated to this new ±71,737 SF Community Center.

Beyond providing all of the public use programs previously offered at the LA Lee YMCA Family Center, the proposed project offers new aquatic programs and new early childhood education programs in response to the needs and demands of the community. Additionally, new academic programs will be offered for graduating high school seniors and college students.

Other than the existing LA Lee YMCA, there are no other facilities in the NWRAC that will offer the same or similar level of services that the proposed project will offer. The YMCA is unique in the services that they offer; in addition to the general recreational and sporting facilities, the YMCA features significant programming for youth development, healthy living, and social responsibility. At this time there are no other YMCA facilities in the City; the nearest YMCA is located in Lauderhill.

5. A description of the reason why the proposed location is necessary in relation to the need for the use or structure;

Response: The proposed YMCA facility is necessary because there is no other facility of this kind in the City, and the addition of a YMCA of this caliber will be a major benefit to the North West Community. The new YMCA will help to alleviate blight in the surrounding area and be a catalyst to future development. Strengthening the community is the YMCA's main cause, and the YMCA strives to achieve this cause be "working side-by-side with our neighbors to make sure that everyone, regardless of age, income or background, has the opportunity to learn, grow and thrive." The LA Lee YMCA is one of the oldest YMCA facilities in south Florida and has benefitted this community for decades. The proposed YMCA will be able to provide significantly more programming for the NWRAC community than the existing YMCA.

In addition to the community-strengthening programming of the proposed YMCA, the economic impact of the proposed facility as an engine for redevelopment is absolute. The proposed project will create additional permanent jobs in the area and will serve as a cornerstone for community events. The location is precisely in the heart of the North West Community centrally located between Broward Boulevard (South) and Sunrise Boulevard (North) and I-95 (West) and NW 7th Avenue (East). The site is supported by excellent public transportation.

6. A description of what makes the location of the use or structure on the property desirable;

Response: Please see response to #5 above.

7. A description of the economic and environmental impact on the area as a result of permitting the use or structure;

Response: During construction the new development will foster job creation from the construction industry. Once complete, the proposed retail use, pre-school Use, academic use, and community center use will anchor significant economic development by creating full-time employment and providing internal users to patronize businesses along the Sistrunk Boulevard Corridor.

As to the environmental impacts, the design of the project incorporates many "green" building design elements such as energy efficient lighting, energy star appliances and high energy efficiency air conditioning systems. Windows and structural components will be compliant with the Hurricane Velocity Zone requirements. Further, exterior glazing will be low-e and the roof will be "cool" white to limit heat gain. The proposed parking reduction will lower the "heat island" effect. Landscaping will be native and irrigation will embrace "drip" technology. The additional parking areas which are needed to meet code would require the removal of green space and installation of asphalt which is far less environmentally friendly than the green space which is currently planned. Moreover, the value of new development is estimated to be significantly higher than the existing structures being replaced.

8. A description of the impact of the use or structure on neighboring properties;

Response: To limit the impacts that are generally associated with significant surface parking, the applicant is proposing a parking reduction. A parking statement prepared by Karl Peterson of KBP Consulting, dated November 20th, 2018, is included with this submission. The statement shows that the parking proposed as part of the new project will be more than adequate for the new development.

The proposed development replaces two (2) existing facilities on existing and neighboring properties and combines them into one new, state-of-the-art building. The neighboring properties should be no more affected from the new proposed building compared to the existing buildings. If anything, the quality of the building and significant community programming at the proposed YMCA will be a benefit to the neighboring properties.

The proposed improvements, including significant landscaping and improved sidewalks, will also benefit the community by providing a more walkable and generally more aesthetically-pleasing area.

9. A description of how the site plan addresses any negative impacts which might occur as a result of permitting the use or structure;

Response: The parking layout proposed in this Site Plan is a significant improvement from the current conditions. It responds to the pedestrian context of the community and takes significant advantage of existing on-site and on-street parking that is currently underutilized. Separate building entrances promoting vehicular traffic to utilize different ROW's for the early childhood education center and the YMCA alleviate traffic congestion. An elegant Colonnade is proposed to access the building use fronting Sistrunk Boulevard. The project includes improved sidewalks

and increased landscaping, which will allow for a better walkable experience for residents of the community.

10. A description of off-site or on-site factors which mitigate any negative impacts which might occur as a result of permitting the public use or structure; and

Response: See response to #9 above.

11. A description of the efforts to locate other sites for the use or structure and reasons why other sites are not as desirable as the site proposed (factors in considering feasibility may include land use, zoning, economic, geographic factors and size).

Response: The proposed YMCA will be located approximately 1,000 feet away from the existing LA Lee YMCA. The proposed YMCA will incorporate the programming found at the existing YMCA, and the applicant believes that the proposed location in the heart of the NWRAC is the ideal location for such a community-focused project.

The proposed site is also ideal for transportation purposes to and from the proposed YMCA. The proposed redevelopment fits neatly along the improved Sistrunk Boulevard and embraces the existing 10'-0" wide pedestrian sidewalk. An elevated colonnade, 8' deep fronting the full length (185') of the proposed building will provide shade for pedestrian traffic and serves as an elegant transition to the proposed ground floor activity along Sistrunk Boulevard. The colonnade will also serve as shelter for mass transit patrons that use the two (2) existing Bus Stops serving the property. Additional Bus Stops to the East (2) and the West (2) also serve the Community.

Across the property, on Sistrunk Boulevard, the beautiful Provident Park provides a green oasis in the heart of Fort Lauderdale's Northwest Regional Activity Center. The passive park is strategically located at the cross lines of Sunrise Boulevard to the North, Broward Boulevard to the South, I-95 to the West and NW 7th Avenue to the East. With a distance of .5 mile in any direction, a pedestrian may take 10 minutes to walk to the to the proposed project.

Additionally, the City's lease with the YMCA stated that the City finds that the YMCA's activities serve a significant public purpose and contemplated the proposed YMCA at this location. Other reasonable sites in the area (i.e. sites that are available for purchase or are owned by the City) do not share many of the characteristics of this site that are explained above.

D. The application shall be reviewed by the city department responsible for review of development permits for a determination that the application is complete and forwarded to the development review committee (DRC). After review and comments by the DRC, the application shall be forwarded to the planning and zoning board for review. The recommendation of the DRC and the planning and zoning board shall be forwarded to the city commission.

Response: Acknowledged.

E. The city commission shall hold two (2) public hearings to consider an ordinance approving a public purpose use or structure and shall provide notice of hearing utilizing the same notice requirements as for a rezoning.

Response: Acknowledged.

F. The city commission may approve or approve with conditions the application for location of a public use or structure based on the following findings:

1. There is a need for the use or structure to be located where proposed.
2. The use meets a valid municipal purpose.
3. The location of the use or structure is not in conflict with the city comprehensive plan.
4. Off-site or on-site conditions exist which reduce any impact of permitting the public use or structure.
5. On-site improvements have been incorporated into the site plan which minimize any adverse impact as a result of permitting the public use or structure.
6. Alternative locations have been identified and reviewed or it has been determined that no feasible alternative locations are available.
7. The proposed site is found to be the most feasible for location of the public use or structure.
8. The public purposes to be met by the location of the use or structure outweigh the application of the zoning regulation and prohibiting the location of the public use or structure.

Response: Acknowledged.

G. The approval of a public use or facility shall terminate when the use or facility is no longer publicly owned or used, and the property upon which the use or facility is located shall be subject to the requirements of the zoning district within which it is located.

Response: Acknowledged.