LVLD2
Verge® Lavatory System – LVL-Series

Rough-Ins for LVLD2 Verge Lavatory Systems

Standard rough-in shown.

Reinforce wall at points A and B.

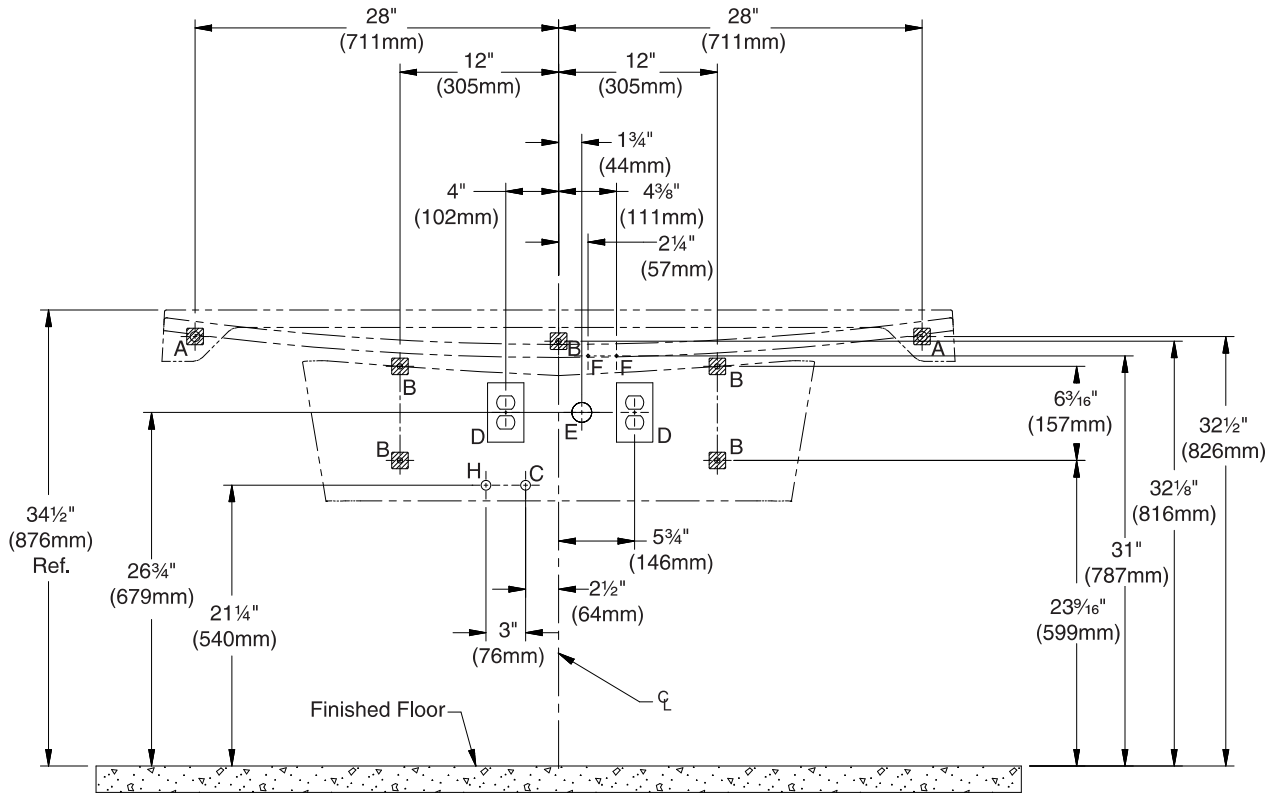

CODE	DESCRIPTION	QTY.
A	3⁄8" Bowl Anchors with a Minimum Pull-Out Force of 1,000 lbs. (reinforce walls at anchor points)	2
B	3⁄8" Frame Anchors with a Minimum Pull-Out Force of 1,000 lbs. (reinforce walls at anchor points)	5
H, C	½" Hot/Cold Supplies, Stub-Out 2" From Wall	1
D	110v GFI Protected Electrical Outlet (AC version only)	2
E	1½" NPT Drain, Stub-Out 2" from Wall	1
F	#10 Anchors for Valve Bracket Installation	2

RIM HEIGHT	VERTICAL HEIGHT ADJUSTMENTS FOR CODES A–E and H	FIXTURE STYLE
33⁷⁄₈"	None	Standard Height, ADA and TAS
30⁷⁄₈"	Subtract 3"	ADA Juvenile and TAS, Grades 6 thru 12

© 2016 Bradley
P.O. Box 309, Menomonee Falls, WI 53052-0309
800 BRADLEY (800 272 3539) +1 262 251 6000
bradleycorp.com

9933, 9934

Utility Shelf

- ☑ Model 9933 – 4 Hooks/3 Holders **Bradex**®
- ☑ Model 9934 – 5 Hooks/4 Holders

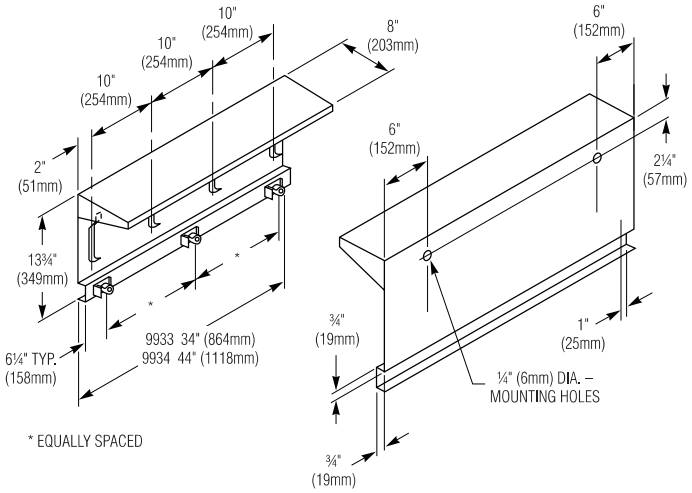

Product Materials

SHELF AND BRACKET: 18 gauge stainless steel with exposed surfaces in architectural satin finish.

HOOKS: 14 gauge stainless steel

HOLDERS: spring-activated rubber cams on plated steel retainers. Will hold a mop or broom handle with a diameter between 5/8" and 1".

Operation

Weight of mop or broom holds handle in place.

Installation

Verify all rough-in dimensions prior to installation. Secure to wall with mounting screws (included) at holes provided.

Guide Specification

Surface mounted utility shelf shall be fabricated of 18 gauge stainless steel in satin finish. Hooks shall be of 14 gauge stainless steel. Holders shall be with spring-activated rubber cams.

Orders composed of products indicated as **Bradex**® will be available to ship in three days after receipt of order at the factory. There is no pricing penalty for this service from Bradley.

Page 1 of 1 5/14/2013

This information is subject to change without notice.

Bradley_UtilityShelf_9933_34

© 2015 Bradley

P.O. Box 309, Menomonee Falls, WI 53052-0309
800 BRADLEY (800 272 3539) +1 262 251 6000
bradleycorp.com

Z415P-SR

BODY ASSEMBLY W/ "TYPE P" STRAINER AND STABILIZER RING

SPECIFICATION SHEET

TAG _____

Dimensional Data (inches and [mm]) are Subject to Manufacturing Tolerances and Change Without Notice

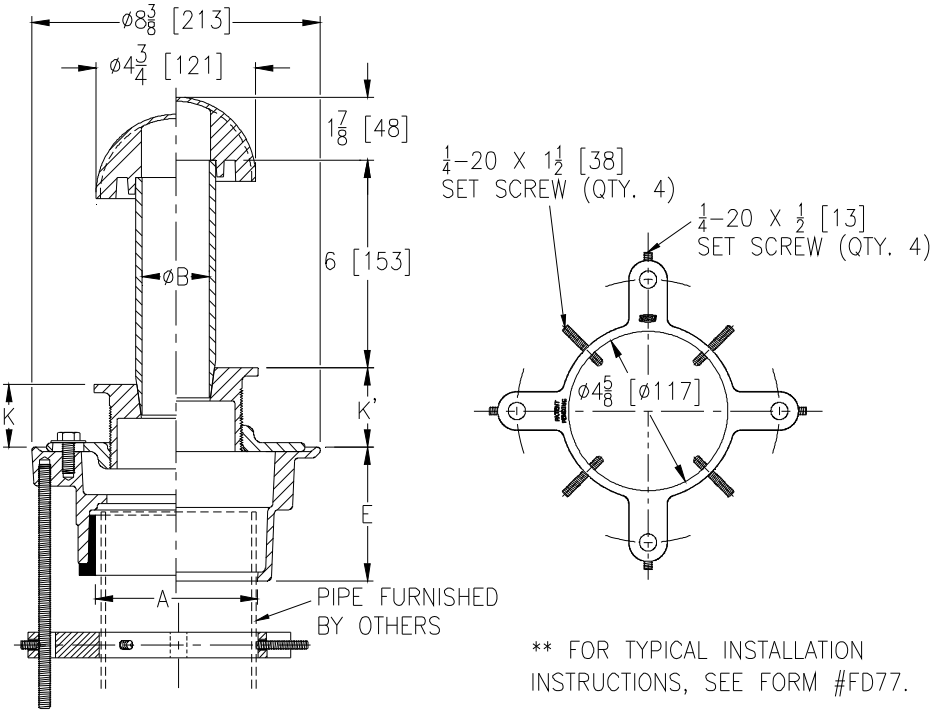

Strainer Desig.	A -Pipe Size	B Strainer Dia.	Dimensions In Inches K Min.	K Max.	K' Min.	K' Max.	Approx. Wt. Lbs. [kg.]	Strainer Open Area Sq. In. [cm²]
-2P	2-3-4 [51-76-102]	2 [51]	7/8 [22]	2-1/8 [54]	1-1/4 [32]	2-7/8 [73]	17 [8]	3 [19]
-3P	2-3-4 [51-76-102]	3 [76]	7/8 [22]	2-1/8 [54]	1-1/4 [32]	2-7/8 [73]	19 [9]	7 [45]

ENGINEERING SPECIFICATION: ZURN ZN415P-SR
Floor and shower drain, Dura-Coated cast iron body with bottom outlet, combination invertible membrane clamp and adjustable collar with seepage slots and "TYPE P" polished, nickel bronze standpipe and dome. Complete with Dura-Coated cast iron floor drain stabilizer ring with four 1/4-20 x 1/2 [13] securing screws to 3/8-16 x 7 [178] threaded rods and four 1/4-20 x 1-1/2 [38] securing screws to outlet piping.

OPTIONS (Check/specify appropriate options)

PIPE SIZE	(Specify size/type)	OUTLET	'E' BODY HT. DIM.
2 thru 4 [51 thru 102]	_____ IC	Inside Caulk	3-7/8 [98]
2 thru 4 [51 thru 102]	_____ IG	Inside Gasket	3-7/8 [98]
2 [51]	_____ IP	Threaded	2-3/8 [60]
3 [76]	_____ IP	Threaded	2-5/8 [67]
4 [102]	_____ IP	Threaded	2-7/8 [73]
2 thru 4 [51 thru 102]	_____ NH	No-Hub	3-7/8 [98]
2 thru 4 [51 thru 102]	_____ NL	Neo-Loc	3-3/4 [95]

PREFIXES

_____ ZB D.C.C.I. Body Assembly w/ Polished Bronze Top
_____ ZN D.C.C.I. Body Assembly w/ Polished Nickel Bronze Top*

SUFFIXES

_____ -AR Acid Resisting Epoxy Coated Cast Iron
_____ -G Galvanized Cast Iron
_____ -LD (Less) Dome
_____ -P Trap Primer Connection (Specify 1/2 [13] or 3/4 [19])
_____ -PS Perforated Standpipe
_____ -SD Longer Standpipe (Specify Height Required)
_____ -SS Stainless Steel Mesh Screen Over Dome and Standpipe
_____ -U 1 - 3 [25 - 76] High Extension Adapter
_____ -18 Leveling Ring (See Z400-18)

*REGULARLY FURNISHED UNLESS OTHERWISE SPECIFIED

REV. A	DATE: 10/19/10	C.N. NO. 111854
DWG. NO. 82727		PRODUCT NO. Z415P-SR

ZURN INDUSTRIES, LLC. ♦ SPECIFICATION DRAINAGE OPERATION ♦ 1801 Pittsburgh Ave. ♦ Erie, PA 16514
Phone: 814/455-0921 ♦ Fax: 814/454-7929 ♦ World Wide Web: www.zurn.com
In Canada: ZURN INDUSTRIES LIMITED ♦ 3544 Nashua Drive ♦ Mississauga, Ontario L4V1L2 ♦ Phone: 905/405-8272 Fax: 905/405-1292

11/20/2017 12:23 PM

Call Us - (800) 444-5783 Live Chat Chat Now

Free Ground Shipping on all orders over $99.00

Zurn Z1446-2 Stainless Steel Dura-Coated Cast Iron Cleanout with Round Wall Access Cover - For 2" Pipe

Item #: bci2380663

Internal

Save 10% on all Zurn products!

Use coupon code ZURN10 and save 10% off all Zurn products for a limited time!
Offer Ends 1/31/2017

$195.00

Originally $273.00, You Save 29%

Compare

Ships to Canada

Be the first to review this product

Shipping: **Free Shipping!** See Details

Ships In: Leaves the Warehouse in 2 to 3 weeks

Finish: Stainless Steel

Stock: **Special Order** **Details**

Quantity: 1

Add To Cart

Live Product Expert Hide
Chat Now

City of Fort Lauderdale

Bid 12072-483

Click to view larger image

Internal

Technical Specs

Specification Sheet

Approved for Commercial Use	Yes
Connection Size	2
Escutcheon Height	5
Escutcheon Included	Yes
Escutcheon Width	5
Length	6.375
Manufacturer Warranty	1 Year Limited
	Cast Iron,

Description | Product Questions | Warranty

Product Features:

- Cleanout tee body constructed of Dura-Coated cast iron with ABS plug and stainless steel wall access cover
- Covered under Zurn-Wilkins' 1 year limited warranty
- Tapered thread plug is gas- and watertight
- Smooth wall access cover and frame
- Secure mounting assembly
- All hardware required for installation is included

Product Specifications:

- Access Cover Diameter: 5"
- Length: 6-3/8"
- Pipe Connection Size: 2"

Additional Zurn Links

- View Manufacturer Warranty

Live Product Expert
Chat Now
Hide

Material	Stainless Steel, Plastic
Theme	Commercial

- Shop All Zurn Products

Our SKU: Z1446-2

This product is listed under the following manufacturer number(s):

Stainless Steel
Z1446-2

*Denotes a finish or option that has been discontinued

Internal

Top Selling Products

Zurn Z7440-WF-XL
Starting At $185.01
☆ ☆ ☆ ☆ ☆ 0

Zurn Z6930-XL
Starting At $428.53
☆ ☆ ☆ ☆ ☆ 0

Zurn Z5344
Starting At $78.93
☆ ☆ ☆ ☆ ☆ 0

Stay connected - Don't miss out on exclusive email offers! Enter Email Address **Sign Me Up** Privacy Policy

Copyright© 2000-2017. Build.com, Inc. All rights reserved.

402 Otterson Dr, Chico, CA USA 95928

Live Product Expert
Chat Now
Hide

TEX•COTE®
TEXTURED COATINGS OF AMERICA, INC.

Anti-Graffiti Coating Systems

GRAFFITI GARD® IV GLOSS

DESCRIPTION

TEX•COTE® GRAFFITI-GARD® IV is a non-sacrificial, two-component, water based high performance clear aliphatic urethane coating that resists graffiti from a variety of materials including spray paints and marking pens. In many cases, freshly applied wet spray paint/ ink will actually crawl back on to itself, frustrating the would-be tagger into stopping and moving on to another target. The slick surface is easy to clean with TEX•COTE® GRAFFITI-GARD IV BIO-DEGRADABLE CLEANER followed by power washing.

FEATURES

- Simple to mix and apply
- Water-based formula
- Excellent graffiti resistance
- Excellent UV resistance
- Easy removal of graffiti
- Breathable coating.
- Low VOC

BENEFITS

- Protects surface against graffiti.
- Water repellant surface stays clean looking.
- Easy removal of graffiti
- Low VOC, able to be used in all states and jurisdictions.

RECOMMENDED OVER

Can be used over many interior and exterior vertical surfaces including bare concrete, split face block, clean and sound previously coated concrete, brick, properly prepared previously coated metal, and other manufacturer approved surfaces.

APPLICATION

Application Equipment: Application of GRAFFITI-GARD® IV GLOSS can be done by brush, roller, or airless sprayer. When spraying product, proper respiratory protection is required. Airless sprayer should use .011-.013 spray tip.

Surface Preparation: Proper surface preparation is essential to achieve the proper results with GRAFFITI-GARD® IV GLOSS. All surfaces must be clean, dry, and in sound condition. Remove all oil, dust, grease, dirt, and other foreign material to ensure proper adhesion. If the surface is previously painted, ensure that it is in sound condition and cleaned of all contaminants. Smooth or glossy coatings should be dulled by abrading the surface, and then all dust removed from the surface. In cases of directly applying to metal, cross-hatch adhesion tape test should be used to insure adequate bonding. Adjacent surfaces not to be coated must be masked

Primer System: When applied to a porous concrete surface such as split-face block, the substrate should be primed with TEXCOTE RAINSTOPPER 1750W Clear Sealer. Previously painted substrates do not need priming.

Application Rate: The actual application rate is dependent on the texture and absorbance of the surface being treated. Typical application rates will be 250-350 square feet per gallon. Textured or absorbent surfaces will require additional material. **For extended warranty, a second coat must be applied as soon as possible after the first coat has set to touch, typically within 1-2 hours. Waiting longer may result in the additional material being repelled by the previous coat. Do not over apply film build as excessive thickness may create milky appearance through air entrapment.**

Mixing: GRAFFITI-GARD® IV GLOSS is a two-component product that must be mixed together prior to doing the application. Open both containers and add the clear Part B slowly while mixing into the Part A container. Mix approximately 2-3 minutes until smooth and uniform. Do not over mix or foam bubbles may be created. Once mixed, you will have 1-2 hours to apply mixed product. The usable pot life is temperature dependent and is shorter at higher temperatures. Product should not be thinned or diluted.

Application: GRAFFITI-GARD® IV GLOSS should be applied in a timely manner, thus planning the application is important. A mock-up sample application is recommended for final approval by architect, engineer, or contractor of the surface appearance.

Safety: Apply with adequate ventilation. Follow all safety precautions including proper respiratory protection as noted in the Material Safety Data Sheet.

Clean-Up: Clean equipment promptly with soap and water.

GRAFFITI REMOVAL

Graffiti should be removed as soon as possible. Spray paint graffiti should be removed with TEX•COTE® GRAFFITI GARD IV BIODEGRADABLE CLEANER followed by power washing. Cleaner should be applied by brush or roller, allow to remain on surface 10 minutes, then scrubbed with a bristle brush, wait an additional 5 minutes, and power wash. Additional application of CLEANER may be necessary for complete graffiti removal. Graffiti not removed in the first few weeks may result in ghosting after cleaning.

REPAINTING

Prior to repainting or top coating Graffiti GARD IV GLOSS, abrading the surface substrate will be necessary. Light sanding or using steel wool are acceptable ways to remove the anti-graffiti properties.

©2012 Textured Coatings of America, Inc. For professional use only. Not for sale or use by the general public. 10/2012

BEST PERFORMANCE

- Follow all instructions closely for surface preparation, mixing, and application.
- Adjacent surfaces not to be coated should be well masked.
- Apply under ideal weather conditions with temperatures between 50-90˚F.
- Shelf life is 6 months at room temperature. Containers should be stored upright and sealed.
- Periodic cleaning with a power-washer will remove any atmospheric dust or dirt residues and keep the surface fresh looking.
- Remove graffiti as soon as possible for greatest ease of removal.
- For maximum protection, apply two coats.

TECHNICAL DATA

- Coverage rate: 250-350 sq ft / gallon
- Weight Percent Solids Mixed A&B: 53-55%
- Density Part A: 8.6 Typical
- Density Part B: 9.6 Typical
- Weight per gallon Density—mixed: 8.9 Typical
- Pot Life @ 77˚F: > One hour
- VOC Mixed A&B: <50 grams/ Liter
- Moisture Vapor Transmission (ASTM D1653): 6 Perms
- Gloss @ 60 Degrees: 75 Minimum
- Abrasion Resistance (ASTM D4060): 0.0145 Wear Index @ 1000 cycles (Excellent).

ORDER INFORMATION

Packaging:
TEX•COTE® GRAFFITI-GARD® IV GLOSS is a clear two-component finish that is available in either 0.9 gallon or five gallon kits. **The kit is comprised of a Part A and Part B component.**
Shelf Life:
Six months in unopened containers. Store indoors and maintain temperature of 45-100˚F.

SAFETY

Use protective clothes, glasses, and gloves when mixing and applying. Use with adequate ventilation. When applying by spray, proper respiratory protective equipment must be worn. Follow recommendations on Material Safety Data Sheet.

VOC COMPLIANCE

All TEX•COTE® products comply with federal and state Volatile Organic Compound (VOC) rules and regulations. Please contact your nearest TCA office for assistance on the local VOC compliance in the area of intended use.

WARRANTY

Upon completion of application of coating in accordance with the manufacturer's recommendations, Textured Coatings of America, Inc. will extend its limited commercial warranty for product replacement as a results of a defect in the material. The manufacturer must be notified prior to the application of the coating and the application must be in compliance with manufacturer's recommendations for installation. TEX•COTE® shall have no obligation to contribute or to otherwise participate in labor or cost associated with effecting repairs. Specimen copy of material warranty is available upon request.

TEX•COTE®
TEXTURED COATINGS OF AMERICA, INC.
CORPORATE OFFICES & EASTERN PLANT
2422 East 15th Street Panama City, Florida 32405
Tel: (850) 769-0347 Fax: (850) 913-8619

COMMERCIAL SALES OFFICE
4101 Ravenswood Road, Suite 218,
FT. Lauderdale, Florida 33312
Tel: (954) 581-0771 Fax: (954) 581-9516

WESTERN PLANT
5950 S. Avalon Blvd.
Los Angeles, California 90003
Tel: (323) 233-3111 Fax: (323) 232-1071

©2012 Textured Coatings of America, Inc. For professional use only. Not for sale or use by the general public. 10/2012

TEX•COTE®
TEXTURED COATINGS OF AMERICA, INC.
Anti-Graffiti Coating Systems

GRAFFITI GARD® IV LOW LUSTER

DESCRIPTION

TEX•COTE® GRAFFITI-GARD® IV LOW LUSTER is a non-sacrificial, two-component, water-based, high performance clear aliphatic urethane coating that resists graffiti from a variety of materials including spray paints and marking pens. In many cases, freshly applied wet spray paint or ink will actually crawl back on to itself, frustrating the would-be tagger into stopping and moving on to another target. The slick surface is easy to clean with TEX•COTE® GRAFFITI-GARD IV BIODEGRADABLE CLEANER followed by power washing.

FEATURES

- Simple to mix and apply
- Water-based formula
- Excellent graffiti resistance
- Excellent UV resistance
- Easy removal of graffiti
- Breathable coating.
- Low VOC
- Low luster finish

BENEFITS

- Protects surface against graffiti.
- Water repellant surface stays clean looking.
- Easy removal of graffiti
- Low VOC, able to be used in all states and jurisdictions.

RECOMMENDED OVER

Can be used over many interior and exterior vertical surfaces including bare concrete, split faced block, clean and sound previously coated concrete, brick, properly prepared previously coated metal, and other manufacturer approved surfaces.

APPLICATION

Application Equipment: Application of GRAFFITI-GARD® IV LOW LUSTER can be done by brush, roller, or airless sprayer. When spraying product, proper respiratory protection is required. Airless sprayer should use .011 - .013 or super fine spray tip.

Surface Preparation: Proper surface preparation is essential to achieve the proper results with GRAFFITI-GARD® IV LOW LUSTER. All surfaces must be clean, dry, and in sound condition. Remove all oil, dust, grease, dirt, and other foreign material to ensure proper adhesion. If the surface is previously painted, ensure that it is in sound condition and cleaned of all contaminants. Smooth or glossy coatings should be dulled by abrading the surface, and then all dust removed from the surface. In cases of directly applying to metal, cross-hatch adhesion tape test should be used to insure adequate bonding. Adjacent surfaces not to be coated must be masked.

Primer System: When applied to a porous concrete surface such as split-face block, the substrate should be primed with TEXCOTE RAINSTOPPER 1750W Clear Sealer. Previously painted substrates do not need priming.

Application Rate: The actual application rate is dependent on the texture and absorbance of the surface being treated. Typical application rates will be 250-350 square feet per gallon. Textured or absorbent surfaces will require additional material. **For extended warranty , a second coat must be applied as soon as possible after the first coat has set to touch, typically within 1-2 hours. Waiting longer may result in the additional material being repelled by the previous coat. Do not over apply film build as excessive thickness may create milky appearance through air entrapment.**

Mixing: GRAFFITI-GARD® IV LOW LUSTER is a two-component product that must be mixed together prior to the application. Open both containers and add the clear Part B slowly while mixing into the Part A container. Mix approximately 2-3 minutes until smooth and uniform. Do not over mix or foam bubbles may be created. Once mixed, you will have 1-2 hours to apply mixed product. The usable pot life is temperature dependent and is shorter at higher temperatures. Product should not be thinned or diluted.

Application: GRAFFITI-GARD® IV LOW LUSTER should be applied in a timely matter, thus planning the application is important. A mock-up sample application is recommended for final approval by architect, engineer, or contractor of the surface appearance.

Safety: Apply with adequate ventilation. Follow all safety precautions including proper respiratory protection as noted in the Material Safety Data Sheet.

Clean-Up: Clean equipment promptly with soap and water.

GRAFFITI REMOVAL

Graffiti should be removed as soon as possible. Spray paint graffiti should be removed with TEX•COTE® GRAFFITI GARD IV BIODEGRADABLE CLEANER followed by power washing. Cleaner should be applied by brush or roller, allow to remain on the surface 10 minutes, then scrubbed with a bristle brush, wait an additional 5 minutes, and power wash. Additional application of stripper may be necessary for complete graffiti removal. Graffiti not removed in the first few weeks may result in ghosting after cleaning.

REPAINTING

Prior to repainting or top coating Graffiti Gard IV LOW LUSTER, abrading the surface substrate will be necessary. Light sanding or using steel wool are acceptable ways to remove the anti-graffiti properties.

BEST PERFORMANCE

- Follow all instructions closely for surface preparation, mixing, and application
- Adjacent surfaces not to be coated should be well masked.
- Apply under ideal weather conditions with temperatures between 50-90˚F.
- Shelf life is 6 months at room temperature. Containers should be stored upright and sealed.
- Periodic cleaning with a power-washer will remove any atmospheric dust or dirt residues and keep the surface fresh looking.
- Remove graffiti as soon as possible for greatest ease of removal.
- For maximum protection apply 2 coats.

©2012 Textured Coatings of America, Inc. For professional use only. Not for sale or use by the general public. 10/2012

TECHNICAL DATA

- Coverage rate: 250-350 sq ft / gallon
- Weight Percent Solids Mixed A&B: 53-55%
- Density Part A: 8.8 Typical
- Density Part B: 9.6 Typical
- Weight per gallon Density—mixed: 9.0 Typical
- Pot Life @ 77˚F: > One hour
- VOC Mixed A&B: <50 grams/ Liter
- Moisture Vapor Transmission (ASTM D1653): 6 Perms
- Gloss @ 60 Degrees: 15—30

ORDER INFORMATION

Packaging:
TEX•COTE® GRAFFITI-GARD® IV Low Luster is a clear two-component finish that is available in either 0.9 gallon or five gallon kits. The kit is comprised of a Part A and Part B component.

Shelf Life:
Six months in unopened containers. Store indoors and maintain temperature of 45-100˚F.

SAFETY

Use protective clothes, glasses, and gloves when mixing and applying. Use with adequate ventilation. When applying by spray, proper respiratory protective equipment must be worn. Follow recommendations on Material Safety Data Sheet.

VOC COMPLIANCE

All TEX•COTE® products comply with federal and state Volatile Organic Compound (VOC) rules and regulations. Please contact your nearest TCA office for assistance on the local VOC compliance in the area of intended use.

WARRANTY

Upon completion of application of coating in accordance with the manufacturer's recommendations, Textured Coatings of America, Inc. will extend its limited commercial warranty for product replacement as a results of a defect in the material. The manufacturer must be notified prior to the application of the coating and the application must be in compliance with manufacturer's recommendations for installation. TEX•COTE® shall have no obligation to contribute or to otherwise participate in labor or cost associated with effecting repairs. Specimen copy of material warranty is available upon request.

TEX•COTE®
TEXTURED COATINGS OF AMERICA, INC.
CORPORATE OFFICES & EASTERN PLANT
2422 East 15th Street Panama City, Florida 32405
Tel: (850) 769-0347 Fax: (850) 913-8619

COMMERCIAL SALES OFFICE
4101 Ravenswood Road, Suite 218,
FT. Lauderdale, Florida 33312
Tel: (954) 581-0771 Fax: (954) 581-9516

WESTERN PLANT
5950 S. Avalon Blvd.
Los Angeles, California 90003
Tel: (323) 233-3111 Fax: (323) 232-1071

©2012 Textured Coatings of America, Inc. For professional use only. Not for sale or use by the general public. 10/2012

For Commercial Applications

Job Name _____ Item Designation _____

Job Location _____ Contractor _____

Engineer _____ Representative _____

Inlet: P-1/2__ P-3/4 __ CP __ C __ Finish: CH __ BR __ PC__

For Non Freezing Areas

Woodford

Model 24

Anti-Siphon Protected

Wall Faucet

The Model 24 is an Anti-Siphon Vacuum Breaker protected wall faucet designed for use in mild climate areas. The Model 24 is designed to blend in with modern architecture for installation on homes, service stations, churches, motels, drive-in restaurants, etc.

Features:

- EPDM Packing
- Adjustable brass packing nut
- Standard "O" size valve seat washer
- Polycarbonate wheel handle and loose tee key
  Optional: Metal wheel handle
- 4 inlet options

Specifications:

- **HOSE CONNECTION VACUUM BREAKER:**
  - NIDEL® Model 34HF with ¾ " hose connection
  - ASSE Standard 1011 approved
  - IAPMO® listed
  - Canadian Standards Association listed
  - Single check valve
- **Maximum Working Pressure:** 125 p.s.i.
- **Maximum Temperature:** 120° F

Model & Inlet

24P-1/2
1/2" FPT

24P-3/4
3/4" FPT

Optional Tee Key Included

24CP
Combination
1/2" Copper Tube
1/2" MPT

24C
Combination
1/2" Copper Tube
3/4" Copper Tube

Exterior Finish:

Standard - Chrome (CH)
Optional - Rough Brass (BR) or Polished Chrome (PC)

Rough-In Dimensions - Typical

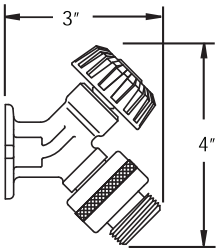

Approval Approval Approval Approval Approval

Specify as follows:
Wall faucet shall be a Woodford Model 24 for non-freezing areas with anti-siphon vacuum breaker. ASSE Standard 1011 approved. ¾" hose connection (specify type of inlet). Exterior finish to be Chrome Plated (options: Rough Brass or Polished Chrome). Loose tee key to be furnished with each faucet. Inlet Type _____

WOODFORD MANUFACTURING COMPANY
2121 WAYNOKA ROAD
COLORADO SPRINGS, CO 80915
Phone (800) 621-6032 Fax (800) 765-4115
Website: www.woodfordmfg.com
Email: sales@woodfordmfg.com

©2006 WOODFORD Mfg.

Sensor Activated Optima Plus® G2 Water Closet Flushometer 8111-1.28

► Code Number
3250289

► Flush Cycle
1.28 gpf/4.8 lpf

► Description
Exposed, Battery Powered, Sensor Operated G2® Model Water Closet Flushometer for floor mounted or wall hung top spud bowls.

► Specifications
Quiet, Exposed, Diaphragm Type, Closet Flushometer for either left or right hand supply with the following features:

- Spud Coupling and Flange for 1½" Top Spud
- Flush Accuracy Controlled by CID Technology
- Sweat Solder Adapter with Cover Tube and Cast Set Screw Wall Flange
- Handle Packing, Main Seat, Stop Seat and Vacuum Breaker Molded from PERMEX® Rubber Compound for Chloramine resistance
- Infrared Sensor with Multiple-focused, Lobular Sensing Fields for high and low target detection
- Initial Set-up Range Indicator Light (first 10 minutes)
- User friendly three (3) second Flush Delay
- "Low Battery" Flashing LED
- ADA Compliant Battery Powered Infrared Sensor for automatic "No Hands" operation
- Latching Solenoid Operator
- 1" I.P.S. Screwdriver Bak-Chek® Angle Stop with Free Spinning Vandal Resistant Stop Cap
- Fixed Metering Bypass and No External Volume Adjustment to Ensure Water Conservation
- Flex Tube Diaphragm designed for improved life and reduced maintenance
- Engineered Metal Cover with replaceable Lens Window
- Courtesy Flush® Override Button
- Four (4) Size AA alkaline Batteries included: Duracell® with DURALOCK Power Preserve TechnologyTM-guaranteed for up to 10 years in storage

Valve Body, Tailpiece and Control Stop shall be in conformance with ASTM Alloy Classification for Semi-Red Brass. Valve shall be in compliance with the applicable sections of ASSE 1037. Installation conforms to ADA requirements.

► Automatic Operation
Sloan G2 Optima Plus Flushometers activate via multi-lobular sensor detection to provide the ultimate in sanitary protection and automatic operation. A battery powered infrared sensor sets the flushing mechanism after the user is detected and completes the flush when the user steps away.

► Functional & Hygienic
Touchless, sensor operation eliminates the need for user contact to help control the spread of infectious diseases. The G2 Optima Plus® Flushometer is provided with an Override Button to allow a "courtesy flush" for individual user comfort.

► Economical
Sloan installed batteries speed installation and provide years of metered flushing to control the use of water and energy. Batteries can be changed without turning off the water.

► Compliance & Certifications

Made In The USA

This space for Architect/Engineer Approval

SLOAN 10500 SEYMOUR AVE. ● FRANKLIN PARK, ● IL. 60131
Ph: 1-800-9-VALVE-9 or 1-847-671-4300 ● Fax: 1-800-447-8329 or 1-847-671-4380 ● http://www.sloan.com

Sensor Activated Optima Plus® G2 Water Closet Flushometer 8111-1.28

► Control Circuit
- Solid State
- 6 VDC Input
- 8 Second Arming Delay
- 3 Second Flush Delay

► Sensor Range
Nominal 22" - 42" (559 mm -1067 mm), Adjustable ± 8" (203 mm)

► Sensor Type
Active Infrared

► Indicator Lights
Range Adjustment

► Operating Pressure
15 - 100 psi (104 - 689 kPa)

► Battery Life
6 Years @ 4,000 Flushes/Month

► OPERATION

1. A continuous, invisible light beam is emitted from the OPTIMA Plus Sensor.

2. As the user enters the beam's effective range (22" to 42") the beam is reflected into the OPTIMA Plus Scanner Window and transformed into a low voltage electrical circuit. Once activated, the Output Circuit continues in a "hold" mode for as long as the user remains within the effective range of the Sensor.

3. When the user steps away from the OPTIMA Plus® Sensor, the circuit waits 3 seconds (to prevent false flushing) then initiates an electrical signal that operates the Solenoid. This initiates the flushing cycle to flush the fixture. The Circuit then automatically resets and is ready for the next user.

► ROUGH-IN
Typical Water Closet Installation

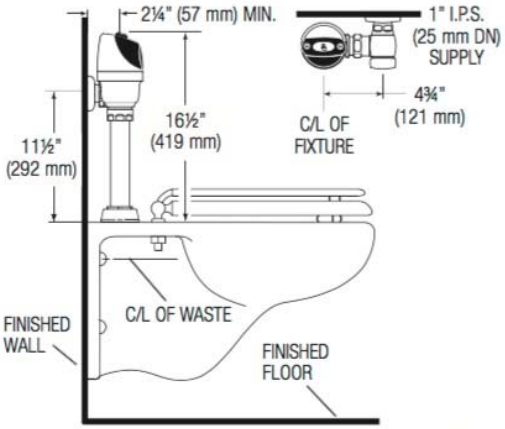

Regal® XL Flushometers 186-XL

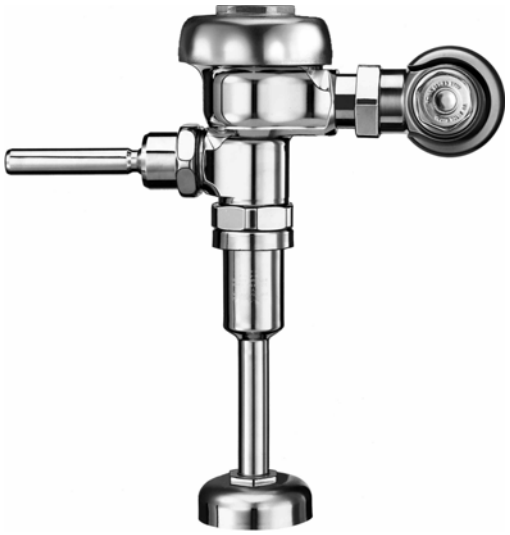

► Code Number
3082653

► Description
Exposed Urinal Flushometer, for ¾" top spud urinals.

► Flush Cycle
1.5 gpf / 5.7 lpf

► Specifications
Quiet, Exposed, Diaphragm Type, Chrome Plated Urinal Flushometer with the following features:

- ADA Compliant Metal Oscillating Non-Hold-Open Handle
- ¾" I.P.S. Screwdriver Bak-Chek® Angle Stop
- Control Stop Plug
- Sweat Solder Adapter with Cover Tube
- Cast Wall Flange with Set Screw
- Vacuum Breaker Flush Connection
- Spud Coupling Wall and Spud Flange for ¾" Top Spud
- Non-Hold-Open Handle and No External Volume Adjustment to Ensure Water Conservation
- Low Consumption flush accuracy controlled by Para-Flo™ Technology
- Diaphragm, Handle Packing and Vacuum Breaker Molded from PERMEX® Rubber Compound for Chloramine Resistance

Valve Body, Cover and Tailpiece shall be in conformance with ASTM Alloy Classification for Semi-Red Brass. Valve shall be in compliance to the applicable sections of ASSE 1037.

► Accessories (Sold Separately)
See Accessories Section of the Sloan catalog for details on these and other Flushometer variations.

► Fixtures
Consult factory for matching Sloan brand fixture options.

► Product Number
186-1.5

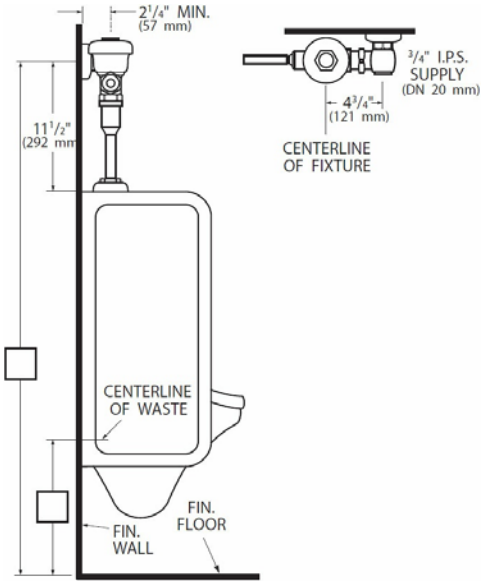

► Disclaimer
All information contained within this document subject to change without notice.

► Compliance & Certifications

Made In The USA

This space for Architect/Engineer Approval

SLOAN 10500 SEYMOUR AVE. ● FRANKLIN PARK, ● IL. 60131
Ph: 1-800-9-VALVE-9 or 1-847-671-4300 ● Fax: 1-800-447-8329 or 1-847-671-4380 ● http://www.sloan.com

American Standard

LUCERNE™ WALL-HUNG LAVATORY

VITREOUS CHINA

BARRIER FREE

LUCERNE™ WALL-HUNG LAVATORY

- Wall-hung sink
- Vitreous china
- Front overflow
- D-shaped bowl
- Self-draining deck area with contoured back and side splash shields
- Faucet ledge
- Compliant with Texas accessibility standard (TAS) for children age group 13 and up

Faucet holes on 203mm (8") centers (Illus.):

❑ **0356.028** For exposed bracket support
Shown with 4801.862 Amarilis Heritage faucet with Triune Cross handles (not included)

❑ **0356.015** For wall hanger (included) or concealed arms support

❑ **0356.915** For wall hanger (included) or concealed arms support
- Less overflow

Faucet holes on 102mm (4") centers:

❑ **0355.027** For exposed bracket support

❑ **0355.012** For wall hanger (included) or concealed arms support

❑ **0355.912** For wall hanger (included) or concealed arms support
- Less overflow

Single center faucet hole (Illus.):

❑ **0356.041** For exposed bracket support
Shown with 1340.000 metering faucet (not included)

❑ **0356.421** For wall hanger (included) or concealed arms support

❑ **0356.921** For wall hanger (included) or concealed arms support
- Less overflow

❑ **0356.439** For wall hanger (included) or concealed arms support
- Single faucet hole on right

❑ **0356.066** For exposed bracket support
- Single faucet hole on right

Nominal Dimensions:
521 x 464mm
(20-1/2" x 18-1/4")

Bowl sizes:
381mm (15") wide
254mm (10") front to back
165mm (6-1/2") deep

Compliance Certifications -
Meets or Exceeds the Following Specifications:
- ASME A112.19.2 / CSA B45.1 for Vitreous China Fixtures

0356.028

0356.041

SEE FOLLOWING PAGES FOR ROUGHING-IN DIMENSIONS

To Be Specified:
❑ Color: ❑ White
❑ Faucet*:
❑ Faucet Finish:
❑ Supplies:
❑ 1-1/4" Trap:
❑ Nipple:
❑ Bracket Support (by others):
❑ Concealed Arms Support (by others):

* See faucet section for additional models available

MEETS THE AMERICANS WITH DISABILITIES ACT GUIDELINES AND ANSI A117.1 ACCESSIBLE AND USABLE BUILDINGS AND FACILITIES - CHECK LOCAL CODES.
Top of front rim mounted 864mm (34") from finished floor.

© 2016 AS America Inc.

American Standard

LUCERNE™ WALL-HUNG LAVATORY

VITREOUS CHINA

BARRIER FREE

0356.028 8" CTRS FOR EXPOSED BRACKET SUPPORT
0356.015 8" CTRS FOR WALL HANGER OR CONCEALED ARMS
0356.915 LESS OVERFLOW

0355.027 4" CTRS FOR EXPOSED BRACKET SUPPORT
0355.012 4" CTRS FOR WALL HANGER OR CONCEALED ARMS
0355.912 LESS OVERFLOW

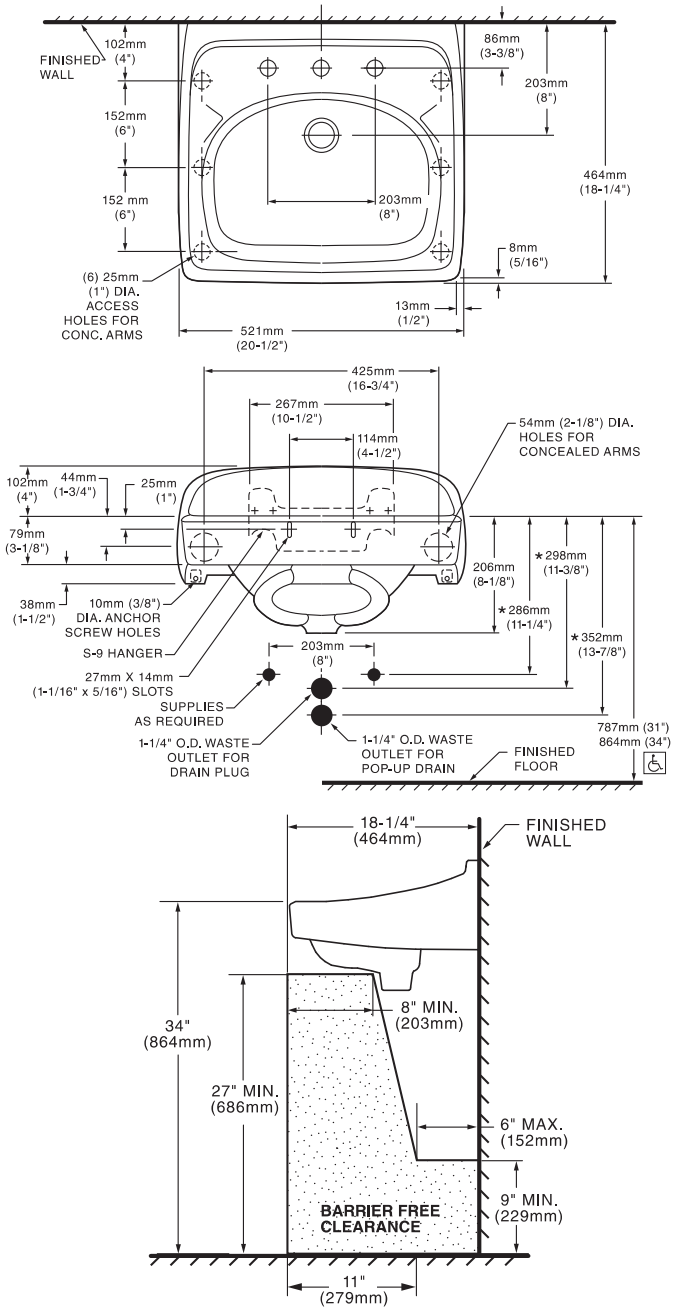

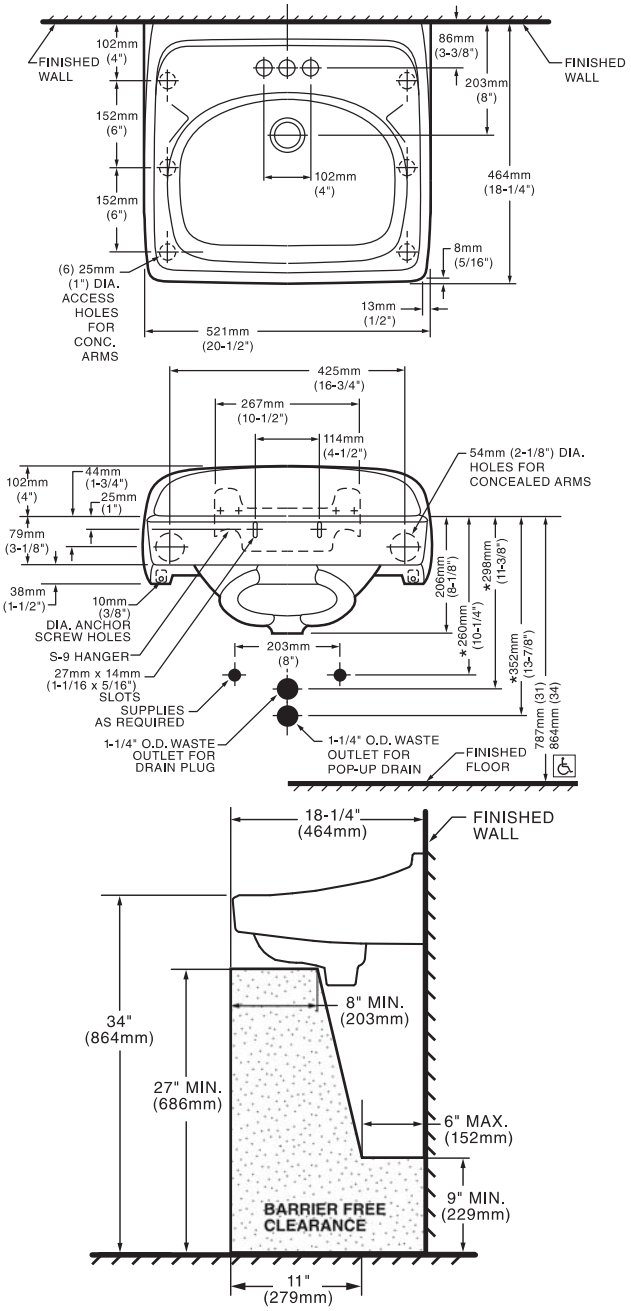

NOTES:
* DIMENSIONS SHOWN FOR LOCATION OF SUPPLIES AND "P" TRAP ARE SUGGESTED.
PROVIDE SUITABLE REINFORCEMENT FOR ALL WALL SUPPORTS.
FITTINGS NOT INCLUDED AND MUST BE ORDERED SEPARATELY.
CONCEALED ARM SUPPORT AS REQUIRED TO BE FURNISHED BY OTHERS.

IMPORTANT: Dimensions of fixtures are nominal and may vary within the range of tolerances established by ANSI Standard A112.19.2. These measurements are subject to change or cancellation. No responsibility is assumed for use of superseded or voided pages.

LAVATORY DESIGNED TO MEET ADA HANDICAPPED GUIDELINES WITH MOUNTING HEIGHT SET AT 864MM (34") ABOVE FINISHED FLOOR.

© 2016 AS America Inc.

LUCERNE™ WALL-HUNG LAVATORY

VITREOUS CHINA

BARRIER FREE

0356.041 SINGLE CENTER HOLE FOR EXPOSED BRACKET SUPPORT

0356.421 SINGLE CENTER HOLE FOR WALL HANGER OR CONCEALED ARMS

0356.921 LESS OVERFLOW

0356.439 SINGLE CENTER HOLE ON RIGHT FOR WALL HANGER OR CONCEALED ARMS

0356.066 SINGLE CENTER HOLE ON RIGHT FOR EXPOSED BRACKET SUPPORT

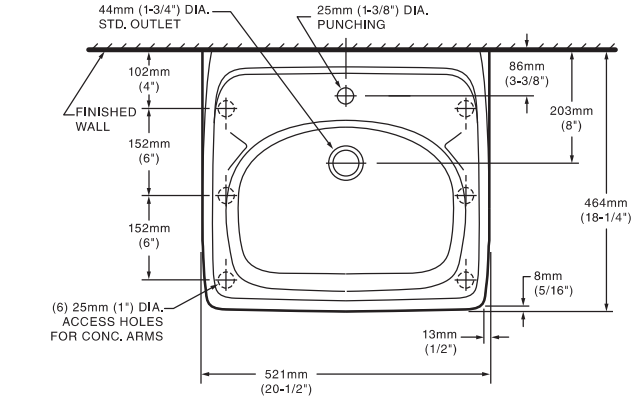

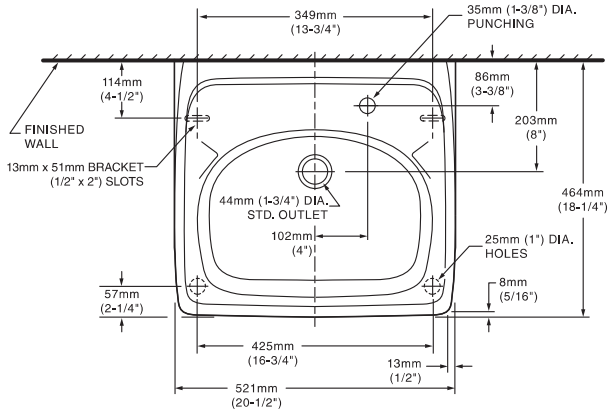

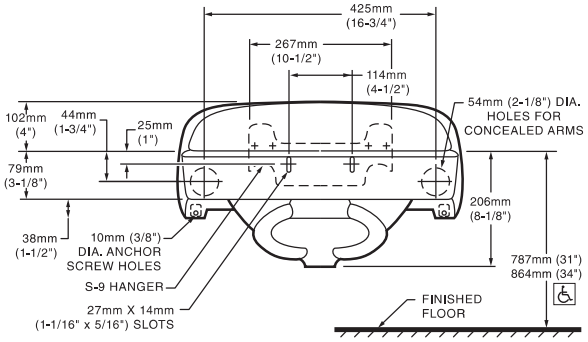

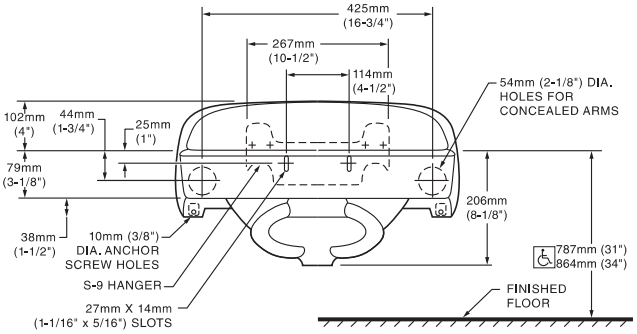

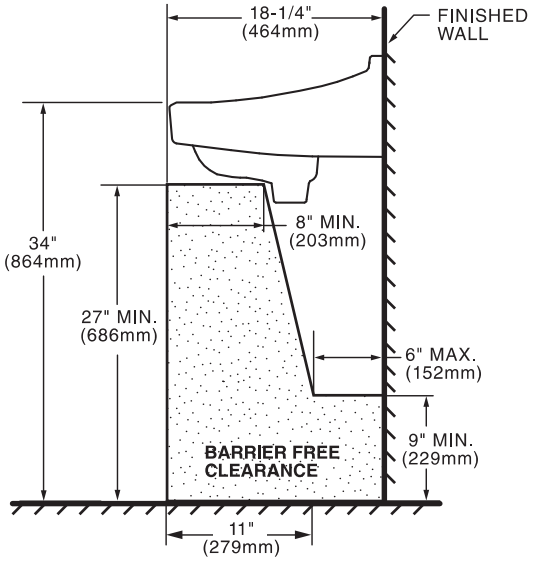

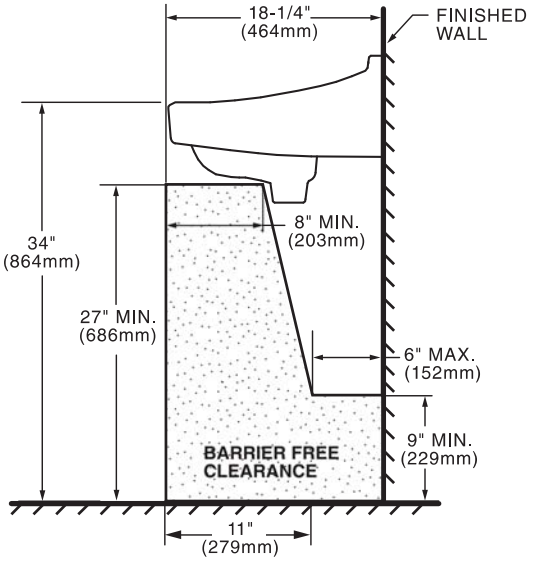

NOTES:
* DIMENSIONS SHOWN FOR LOCATION OF SUPPLIES AND "P" TRAP ARE SUGGESTED.
PROVIDE SUITABLE REINFORCEMENT FOR ALL WALL SUPPORTS.
FITTINGS NOT INCLUDED AND MUST BE ORDERED SEPARATELY.
CONCEALED ARM SUPPORT AS REQUIRED TO BE FURNISHED BY OTHERS.

IMPORTANT: Dimensions of fixtures are nominal and may vary within the range of tolerances established by ANSI Standard A112.19.2. These measurements are subject to change or cancellation. No responsibility is assumed for use of superseded or voided pages.

LAVATORY DESIGNED TO MEET ADA HANDICAPPED GUIDELINES WITH MOUNTING HEIGHT SET AT 864MM (34") ABOVE FINISHED FLOOR.

© 2016 AS America Inc.

PART OF LIXIL

spec_0355-0356 Lucerne WallHung Lavs Rev. A 8/16

AFWALL® MILLENIUM™ 1.6 GPF FLUSHOMETER TOILET SYSTEM

LESS EVERCLEAN®
SELECTRONIC® FLUSH VALVE

BARRIER FREE

AFWALL® MILLENIUM™ 1.6 GPF FLUSHOMETER TOILET SYSTEM LESS EVERCLEAN®

❑ **2257.660** 1.6 gpf Exposed Top Spud Bowl and Selectronic® Flush Valve

BOWL:
- Wall-mounted elongated flushometer valve toilet
- Vitreous china
- High Efficiency. Operates in the range of 1.1 gpf to 1.6 gpf (4.2 Lpf to 6.0 Lpf)
- Conventional glaze
- Condensation channel
- Powerful direct-fed siphon jet action
- 1-1/2" inlet spud
- Fully-glazed 2-1/8" trapway
- 10" x 12" water surface area
- 100% factory flush tested
- Bolt caps and seat not included
- Model 2257.101

SELECTRONIC® FLUSH VALVE:
- Factory-Installed CR-P2 Lithium Battery
- Self-Cleaning Piston with integral wiper spring significantly reduces clogging and maintenance
- Selectronic® Proximity System with universal sensor provides hygienic, "hands free" operation
- State-of-the-Art Electronics prevent ghost flushing
- Dezincification Resistant semi-red brass alloy
- Fully Mechanical Manual Override Button can flush the valve without power
- Fail-Safe: Valve automatically closes upon loss of power or water pressure and does not need to be reset
- Adjustable Sanitary Flush cleans the fixture & maintains the trap seal.
- Chemical Resistant EPDM Seals for extended life
- Adjustable Tailpiece for rough-in flexibility
- Can be installed left or right handed
- Model 6065.161

Includes:
- 047007-0070A Inlet Spud (furnished with bowl)
- 1" I.P.S. angle stop with back-flow protection and vandal resistant cap
- 1" Sweat solder kit including cover tube and wall flange
- 1-1/2" High back pressure vacuum breaker, spud coupling and flange

SEE REVERSE FOR ROUGHING-IN DIMENSIONS

System MaP* Score:
- 1,000 grams of miso @ 1.6 gpf

* Maximum Performance (MaP) testing performed by IAPMO R&T Lab. MaP Report conducted by Veritec Consulting, Inc. and Koeller and Company.

BATTERY LIFE:
- 4 years @ 4,000 flushes per month

Operating Pressure:
25 psi (flowing) - 80 psi (static)

Flow Requirement:
25gpm (94.6 L/min.)

Nominal Fixture Dimensions:
660 x 356 x 381mm (26" x 14" x 15")

To Be Specified:
❑ Color: ❑ White
❑ Seat:
- ❑ American Standard #5901.100 Heavy duty open front less cover
- ❑ American Standard #5905.100 Extra heavy duty open front less cover

© 2016 AS America Inc.

AFWALL® MILLENIUM™ 1.6 GPF FLUSHOMETER TOILET SYSTEM

LESS EVERCLEAN® SELECTRONIC® FLUSH VALVE

BARRIER FREE

Fixture Compliance Certifications - Meets or Exceeds the Following Specifications:

- ASME A112.19.2-2008 / CSA B45.1-08 for Vitreous China Fixtures

Valve Listings:

- ASSE 1037
- ANSI/ASME A112.19.2
- ADA Compliant

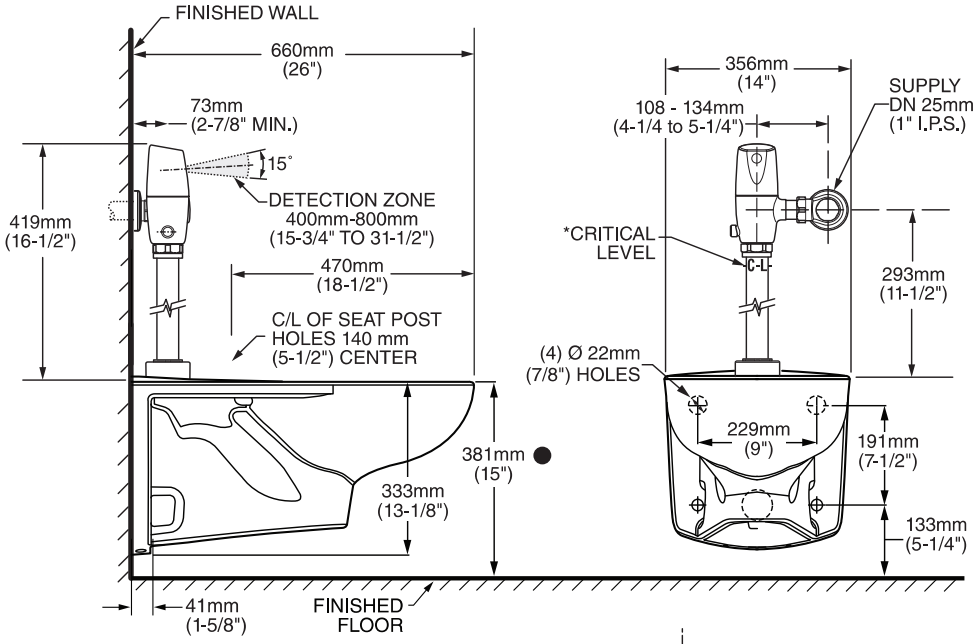

*Note: The Critical Line (-C-L-) on Vacuum Breaker must typically be a minimum of 6" (152mm) above fixture. Consult Codes for details.

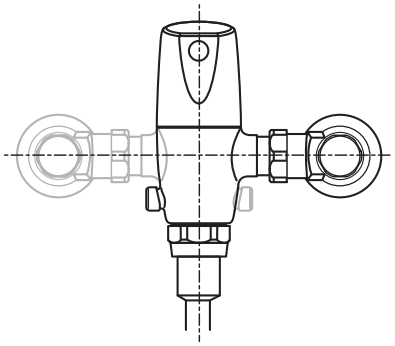

VALVE LEFT or RIGHT HAND INSTALLATION

MEETS THE AMERICANS WITH DISABILITIES ACT GUIDELINES AND ANSI A117.1 ACCESSIBLE AND USABLE BUILDINGS AND FACILITIES - CHECK LOCAL CODES.

● When installed so that top of seat is 432 to 483mm (17" to 19") from the finished floor.

NOTES:
WASTE OUTLET SEAL RING MUST BE NEOPRENE OR GRAPHITE-FELT (WAX RING NOT RECOMMENDED).
SUGGESTED 2mm (1/16) CLEARANCE BETWEEN FACE OF WALL AND BACK OF BOWL.
TO COMPLY WITH AREA CODE GOVERNING THE HEIGHT OF VACUUM BREAKER ON THE FLUSHOMETER VALVE, THE PLUMBER MUST VERIFY DIMENSIONS SHOWN FOR SUPPLY ROUGHING.
CARRIER FITTING AS REQUIRED TO BE FURNISHED BY OTHERS.
PROVIDE SUITABLE REINFORCEMENT FOR ALL WALL SUPPORT.

IMPORTANT: Dimensions of fixtures are nominal and may vary within the range of tolerances established by ANSI Standard A112.19.2.
These measurements are subject to change or cancellation. No responsibility is assumed for use of superseded or voided pages

© 2016 AS America Inc.

WASHBROOK® 1.0 GPF URINAL SYSTEM

SELECTRONIC® EXPOSED AC FLUSH VALVE

BARRIER FREE

WASHBROOK® 1.0 GPF URINAL SYSTEM

❑ **6501.615** 1.0 gpf Exposed Top Spud Urinal and Selectronic® Exposed AC Urinal Flush Valve

URINAL:
- Vitreous china
- Ultra High Efficiency. Operates in the range of 0.125 gpf to 1.0 gpf (0.5 Lpf to 3.8 Lpf)
- Flushing rim
- Elongated 14" rim from finished wall
- Washout flush action
- Extended sides for privacy
- 3/4" inlet spud
- Outlet connection threaded 2" inside (NPTF)
- Strainer included
- Meets ASME flush requirements at 0.125 to 1.0 gpf
- Model 6590.001 top spud

SELECTRONIC® FLUSH VALVE:
- Pressure Compensation feature ensures accurate flush volume regardless of inlet water pressure
- Self-Cleaning Piston with integral wiper spring significantly reduces clogging and maintenance
- Selectronic® Proximity System with universal sensor provides hygienic, "hands free" operation
- State-of-the-Art Electronics prevent ghost flushing
- Dezincification Resistant semi-red brass alloy
- Fully Mechanical Manual Override Button can flush the valve without power
- Fail-Safe: Valve automatically closes upon loss of power or water pressure and does not need to be reset
- Adjustable Sanitary Flush cleans the fixture & maintains the trap seal
- Stadium Feature: Valve automatically switches to water savings mode during periods of heavy usage
- Chemical Resistant EPDM Seals for extended life
- Adjustable Tailpiece for rough-in flexibility
- Can be installed left or right handed
- Includes Class 2 UL certified universal hard-wired AC transformer
- Universal input voltage: 100 - 240 VAC, 50/60 Hz
- Optional cover plate only required for installation from the front
- Model 6062.101

SEE REVERSE FOR ROUGHING-IN DIMENSIONS

Operating Pressure:
20 psi (flowing) - 80 psi (static)

Flow Requirement:
10 gpm (37.9 L/min.)

Nominal Fixture Dimensions:
360 x 480 x 664mm (14-1/8" x 18-7/8" x 26-1/8")

Includes:
- 3/4" I.P.S. angle stop with back-flow protection and vandal resistant cap
- 3/4" Sweat solder kit including cover tube and wall flange
- 3/4" High back pressure vacuum breaker, spud coupling and flange

© 2016 AS America Inc.

WASHBROOK® 1.0 GPF URINAL SYSTEM

SELECTRONIC® EXPOSED AC FLUSH VALVE

BARRIER FREE

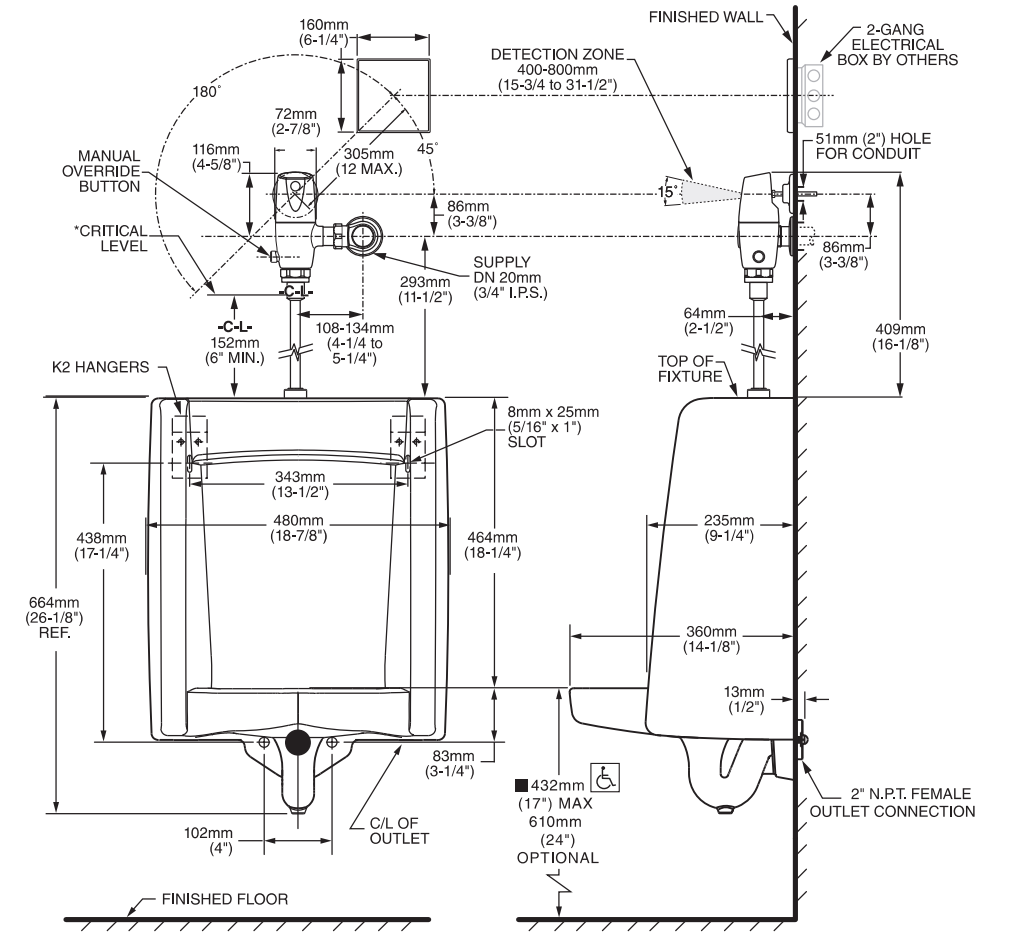

*Note: The Critical Line (-C-L-) on Vacuum Breaker must typically be a minimum of 6" (152mm) above fixture. Consult Codes for details.

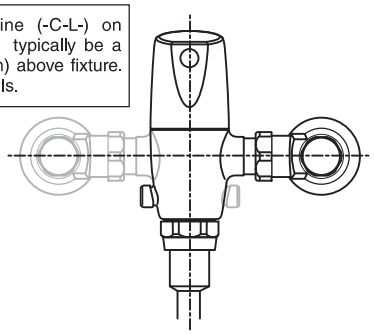

VALVE LEFT or RIGHT HAND INSTALLATION

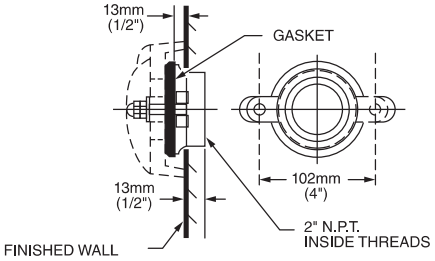

DETAIL OF OUTLET CONNECTION

Fixture Compliance Certifications - Meets or Exceeds the Following Specifications:

- ASME A112.19.2-2008/CSA B45.1-08 for Vitreous China Fixtures

Valve Listings:

- ASSE 1037
- ANSI/ASME A112.19.2
- ADA Compliant

MEETS THE AMERICANS WITH DISABILITIES ACT GUIDELINES AND ANSI A117.1 ACCESSIBLE AND USABLE BUILDINGS AND FACILITIES - CHECK LOCAL CODES.

- When installed so top of rim is 432mm (17") MAXIMUM from finished floor.

NOTES:
PROVIDE SUITABLE REINFORCEMENT FOR ALL WALL SUPPORTS.

IMPORTANT: Dimensions of fixtures are nominal and may vary within the range of tolerances established by ANSI Standard A112.19.2. These measurements are subject to change or cancellation. No responsibility is assumed for use of superseded or voided pages.

© 2016 AS America Inc.

PART OF LIXIL

spec_6501.615 Washbrook 1.0gpf Rev. B 8/16

GALILEO®
Tradition & Technology for Tomorrow

650/680 SERIES INSTALLATION INSTRUCTIONS

Gooseneck Faucet

Lavatory Faucet

Wall Mount Faucet

TABLE OF CONTENTS

Product Overview 2
Available Faucet Options 2
Common Replacement Parts 2
How to Order 2
Care and Maintenance 2
Technical Support 2
Safety Information 3
Pre-Installation Setup 3
Model Identification 3
Component Identification 4
Installation 5
- Gooseneck Faucet-Single Hole & Cover Plate 5
- Gooseneck Faucet-Wall Mount 6
- Lavatory Faucet 7
- Solenoid and Optional Valves 8
- Electronics Assembly (AC) 9
- Electronics Assembly (Battery Operated) 10
- Completed Installations 11

Faucet Operation 12
Changing Faucet Operation 12
Troubleshooting 13
Warranty 16

Las instrucciones en **espanol** comienzan en la pagina 18
Les instructions en **francais** commencent a la page 36

ADA Compliant

Trademarks

The Galileo 650/680 Series faucet spout design is licensed under U.S. patent number D446,843 S and foreign counterparts. U.S. patents pending on the Galileo 650/680 Series faucet infrared electronics design. Synapse Commander and Synapse Infrared are trademarks or registered trademarks of their respective holders.

Copyrights

© 2003 Chicago Faucets Co. All rights reserved. The information in this manual is subject to change without notice.

Notice to Installers

Please leave this manual with the facility manager after completing the faucet installation. This document contains information necessary for routine maintenance and servicing.

CHICAGO FAUCETS®
a Geberit company

THE CHICAGO FAUCET COMPANY
2100 S. Clearwater Drive Des Plaines, IL 60018-5999
Phone: (847) 803-5000 Fax: (847) 803-5454
www.chicagofaucets.com

Tag 680-4 **Printed in USA © 1004**

PRODUCT OVERVIEW

The Galileo 650/680 Series state-of-the-art motion sensing faucet systems are designed to make life safer and easier. The hands-free, touchless convenience produces a more sanitary environment and promotes water conservation. This user-friendly patented system adjusts automatically to the environment. The craftsmanship and electronics design make these faucets the best value in the market.

In addition, the Galileo 650/680 Series faucets support an optional handheld maintenance tool called Geberit Commander™. The patented Geberit Commander™ system uses wireless technology to communicate with the faucet to provide troubleshooting and maintenance information along with faucet history and status, and for making faucet adjustments.

For more information on the Geberit Commander™ system, please contact your local Chicago Faucets dealer, or www.chicagofaucets.com.

AVAILABLE FAUCET OPTIONS

4" and 8" (Centerset) Cover plate
(not available with wall mount versions)

Adjustable mechanical side-mix valve
– Catalog number 123-CP

Multi-unit hardwire transformer option for
Galileo 650/652/653 Series, handles up to eight units
– Catalog number 128-NF

Single unit plug-in transformer option for
Galileo 650/652/653 Series
– Catalog number 126-NF

Mixing "Y"
– Catalog number 560-045KJKRBF

Thermostatic mixing valve (requires only a single supply connection to the base fitting), handles up to 5 faucets
– Catalog number 119-NF

Stop Valve (supply-stop valves and check valves must be used when hot and cold supplies are mixed ahead of the solenoid valve) (with non-mixing valve models)
– Catalog number 441-LKC

For more information regarding faucet options, visit our website at www.chicagofaucets.com.

COMMON REPLACEMENT PARTS

Spout Assembly, Lavatory	570-001KJKCP
4" Cover Plate Assembly	570-003KJKCP
8" Cover Plate Assembly	570-008KJKCP
Sensor Collar Assembly	570-012KJKCP
Partition Assembly, DC	570-032KJKNF
Partition Assembly, AC	570-033KJKNF
Solenoid Wire Harness Assembly	570-039KJKNF
Electronics Box Assembly, DC	570-059KJKNF
Electronics Box Assembly, AC	570-060KJKNF
Gasket Kit	570-097KJKNF
Screw Kit	570-098KJKNF
Washer Kit	570-099KJKNF
4" Cover Plate Assembly w/Side Mix Valve	570-071KJKCP
8" Cover Plate Assembly w/Side Mix Valve	570-135KJKCP
Solenoid Assembly (Deck Mount)	570-144KJKRBF
Solenoid Assembly (Wall Mount)	570-145KJKRBF
Solenoid Rebuild Kit	570-344KJKNF
Wall Collar and Elbow Assembly	570-158KJKCP

HOW TO ORDER

Contact your local Chicago Faucets dealer or visit our website at www.chicagofaucets.com

CARE AND MAINTENANCE

All Chicago Faucets fittings are designed and engineered to meet or exceed industry performance standards. Care should be taken while cleaning this product.

- Use of abrasive cleaners, chemicals or solvents can damage the faucet surface.
- Use mild soap with warm water for cleaning and protecting the life of the Chicago Faucets fittings. Make sure the sensor eyes are kept clean and free of obstructions.
- The solenoid assembly includes a strainer to catch particles in the water. Periodically clean the strainer to keep it from clogging.
  - Close the supply lines and remove the filter nut.
  - Wash or brush the strainer until clean.
  - Do not overtighten the strainer when replacing.
- If water conditions are harsh, clean the solenoid and outlet (spout).

TECHNICAL SUPPORT

For additional technical assistance, visit our website at www.chicagofaucets.com, or call

1-800-TEC-TRUE (1-800-832-8783)

SAFETY INFORMATION

- **Read this entire instruction sheet to ensure proper installation.**
- **Compliance and conformity to local codes and ordinances is the responsibility of the installer.**
- **Flush all the water supply lines before making connections.**
- **File these instructions with the owner or maintenance department.**

⚠ CAUTION indicates a practice or condition that MAY result in damage to the equipment if the instruction or notice is ignored.

PRE-INSTALLATION SETUP

⚠ CAUTION

Make sure that water supply is completely off before beginning installation.

Galileo 650 Series (AC) Faucets

The installation site should have access to an electrical box with 120 volt AC, 60 Hz cycle for input to a transformer. When installing the 126-NF transformer, the electrical box should be within 6' of the sink. When installing the 128-NF transformer, the electrical box should be within 50' of the sink, if 18-gauge cable is used.

IMPORTANT: DO NOT attempt to operate multiple faucets using a single-fitting transformer. Always use 128-NF transformer for multiple units.

Two types of transformer are available:

- Single fitting, plug-in
  – Catalog number 126-NF
- Single fitting or multiple fittings (one to eight) hardwire
  – Catalog number 128-NF

Galileo 680 Series Battery Powered (DC) Faucets

The faucets are powered by four “AA” alkaline batteries (included).

Lavatory-style faucets are shipped with the spout, collar and cover plate assembled.

Replacing An Existing Faucet

Remove existing faucet, handles and supply lines from the sink and supply stops.

Required Tools and Supplies

Your Galileo faucet comes with all the components needed for installation, however, tools and some supplies must be furnished by you.

NOTE: Teflon tape is the recommended sealant.

⚠ CAUTION

Do not use pipe dope on faucet and supply connections. Possible solenoid contamination could occur and will void any warranty.

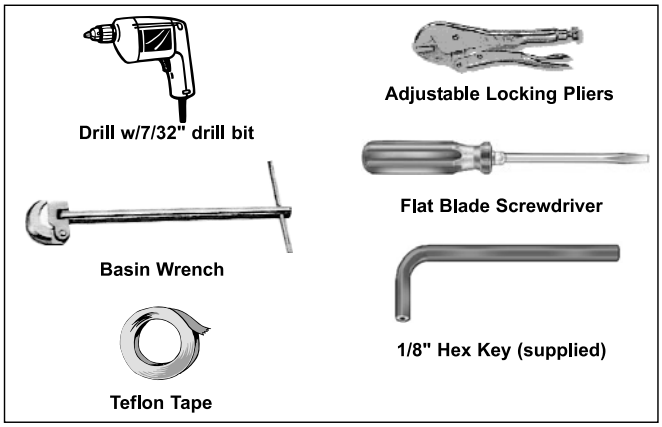

MODEL IDENTIFICATION

Gooseneck Faucet – Surface Mount

Model 652	Single Hole	AC
Model 652-123	w/Side Valve	AC
Model 652-4	w/4" Cover Plate	AC
Model 652-4-123	w/4" Cover Plate & Side Valve	AC
Model 652-8	w/8" Cover Plate	AC
Model 652-8-123	w/8" Cover Plate & Side Valve	AC
Model 682	Single Hole	DC
Model 682-4	w/4" Cover Plate	DC
Model 682-8	w/8" Cover Plate	DC
Model 682-8-123	w/8" Cover Plate & Side Valve	DC

Gooseneck Faucet – Wall Mount

Model 653	Single Hole	AC
Model 683	Single Hole	DC

Lavatory Faucet

Model 650	Single Hole	AC
Model 650-4	w/4" Cover Plate	AC
Model 650-8	w/8" Cover Plate	AC
Model 650-8-123	w/8" Cover Plate & Side Valve	AC
Model 680	Single Hole	DC
Model 680-4	w/4" Cover Plate	DC
Model 680-4-123CP	w/4" Cover Plate & Side Valve	DC
Model 680-8	w/8" Cover Plate	DC
Model 680-8-123	w/8" Cover Plate & Side Valve	DC

Side Mix Valve (not available with wall mount)

Model 123-CP

Mixing Y-Valve

Model 560-045KJKRBF

Thermostatic Mixing Valve

Model 119-NF

Transformers

Model 126-NF, Plug-In

Model 128-NF, Hardwire

COMPONENT IDENTIFICATION

Care should be taken when unpacking shipping carton to avoid damage to unit and the following components enclosed. If any parts are missing or damaged, contact your local Chicago Faucets dealer.

Gooseneck Faucet (shown w/cover plate) – Surface Mount

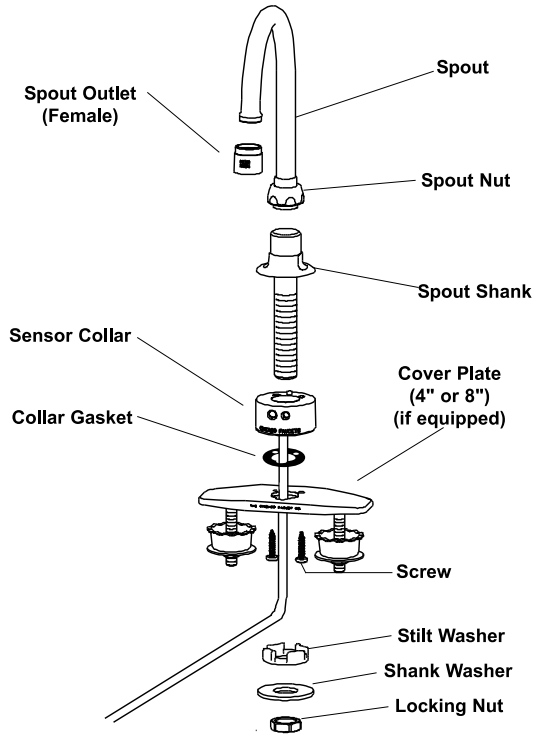

Gooseneck Faucet – Wall Mount

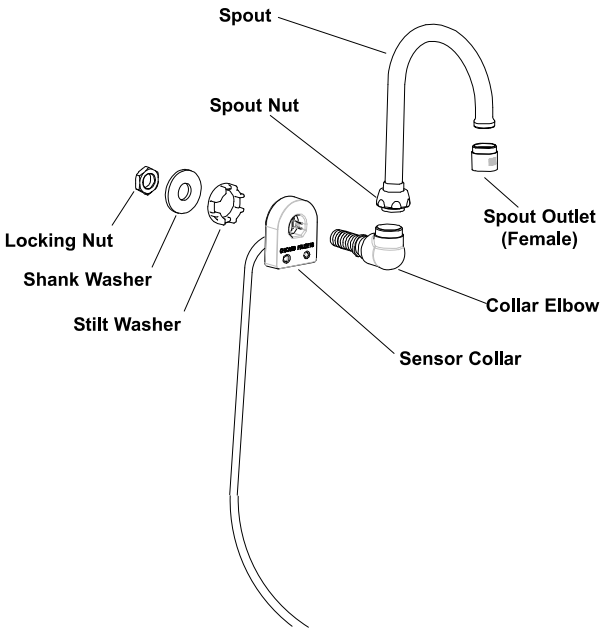

Lavatory Faucet (shown with cover plate)

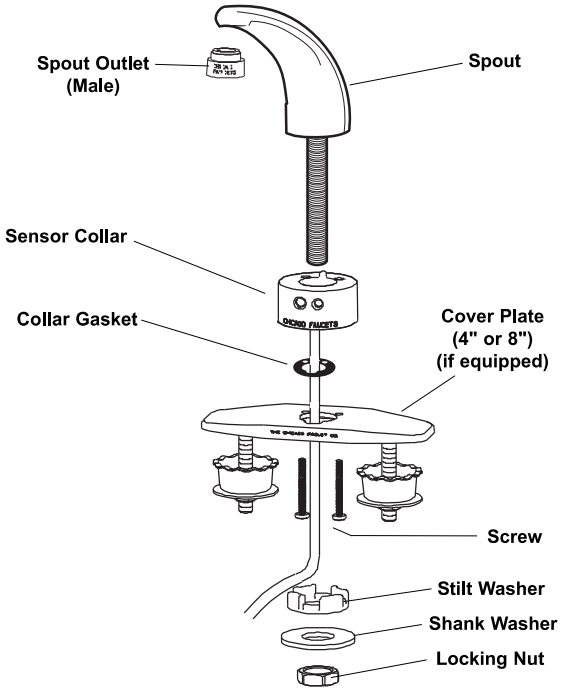

Electronic Box, Solenoid & Side Mix Valve

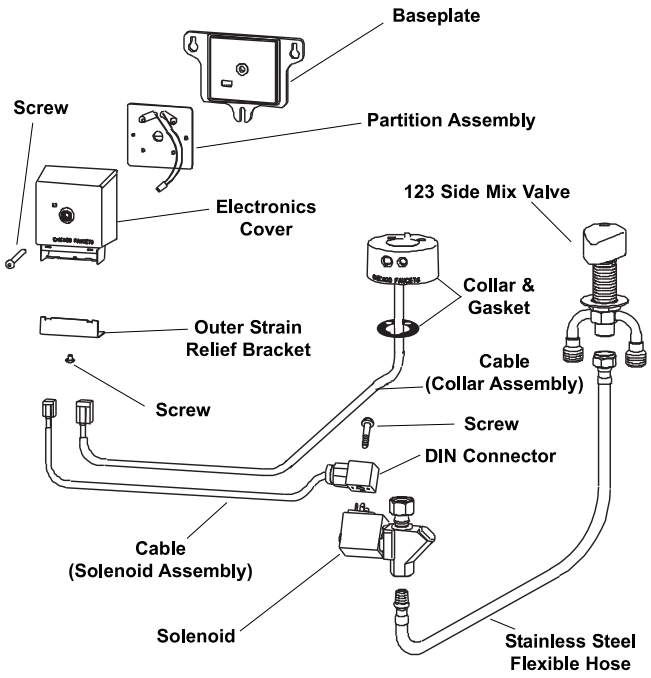

INSTALLATION – GOOSENECK FAUCET – SINGLE HOLE & COVER PLATE

1 Remove the locknut (1), washer (2), stilt washer (3) from the spout shank (4). Remove shank from cover plate (if supplied).

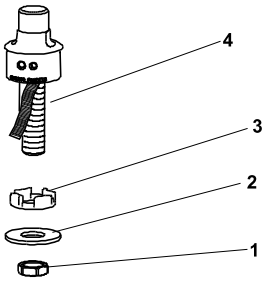

2 Install faucet assembly into deck hole.
Use plumbers putty to seal faucet to deck.

Be careful not to nick or cut the sensor cable during installation.

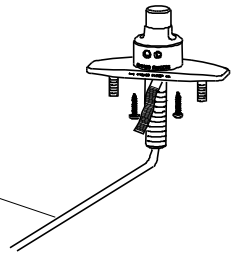

3 Install stilt washer (1) all the way up onto shank, crown side up. Position sensor cable (2) through one of the rounded slots in the stilt washer (1).

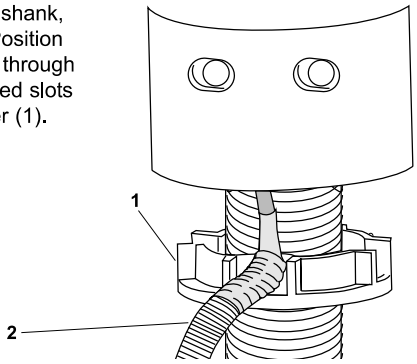

4 Install the shank washer (1) and locknut (2) onto faucet shank. Tighten locknut securely to prevent collar and spout from rotating. If necessary, support spout base from above to prevent twisting.

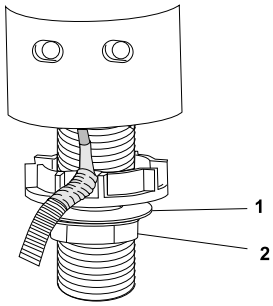

5 If faucet was installed with cover plate, secure cover plate with basin washers (1), flat washers (2) and locknuts (3).

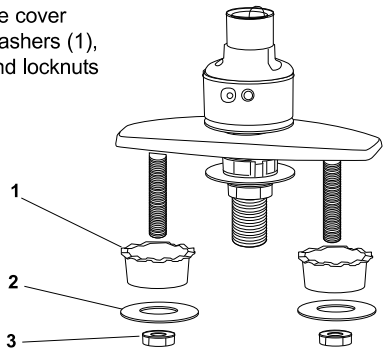

6 Install spout nut (1) onto the spout.

For swivel mount, only install two plastic split washers (2).

For rigid mount, only install 1/8" thick plastic washer (3).

Mount the spout completely into the base and securely tighten the spout nut (1).

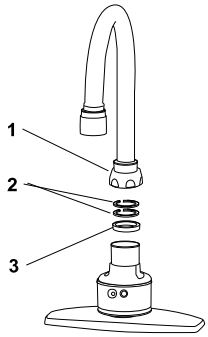

7 ⚠ **CAUTION**
Flush water lines before performing this step.

Attach the outlet assembly (1) and aerator gasket (2) to the spout. The outlet assembly is equipped from the factory with a 0.5 GPM cartridge (white screen). To configure the outlet with the 2.2 GPM cartridge (yellow screen) see step 8.

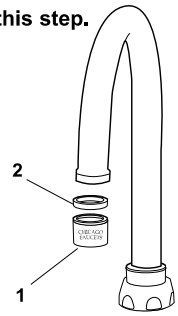

☞ **If 0.5 GPM spout is to be used, skip step 8 and proceed to *Installation - Solenoid and Optional Valves, page 8.***

8 To convert outlet assembly to 2.2 GPM:
1. Disassemble outlet assembly using key (1).
2. Remove the 0.5 GPM cartridge (white screen) and replace it with the 2.2 GPM cartridge (2).
3. Install the rubber washer (3), adapter (4) and aerator gasket (5).

☞ **Proceed to *Installation - Solenoid and Optional Valves, page 8.***

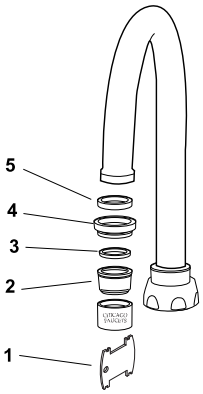

INSTALLATION – GOOSENECK FAUCET – WALL MOUNT

1 Remove the locknut (1), washer (2), stilt washer (3) from the shank (4).

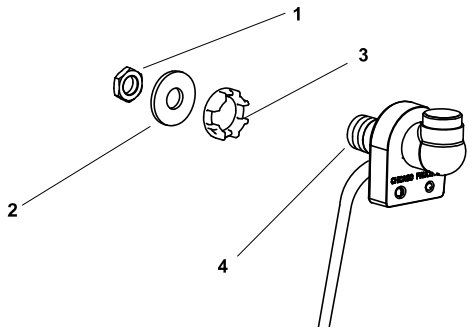

2 Install the sensor collar assembly into the wall hole.

Install stilt washer (1) all the way up onto shank, crown side in. Position sensor cable (2) through one of the rounded slots in the stilt washer

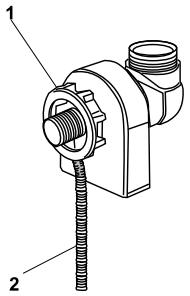

Be careful not to nick or cut the sensor cable during installation.

3 Install the shank washer (1) and locknut (2) onto faucet shank. Tighten locknut securely to prevent spout from rotating. Install elbow (3) using Teflon tape on threads. *NOTE: Make sure collar is not resting on cable while tightening. Support wall collar assembly while tightening elbow.*

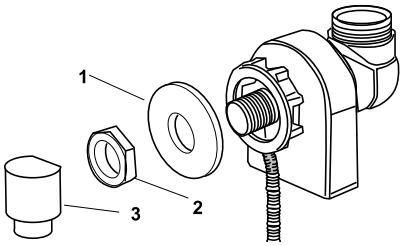

4 Install spout nut (1) onto the spout.

For swivel mount, only install two plastic split washers (2).

For rigid mount, only install 1/8" thick plastic washer (3).

Mount the spout completely into the base and securely tighten the spout nut (1).

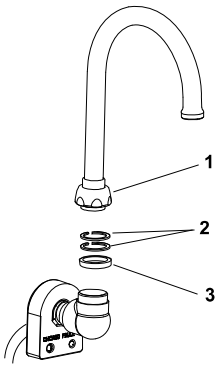

5

⚠ CAUTION
Flush water lines before performing this step.

Attach the outlet assembly (1) and aerator gasket (2) to the spout. The outlet assembly is equipped from the factory with a 0.5 GPM cartridge (white screen). To configure the outlet with the 2.2 GPM cartridge (yellow screen) see step 6.

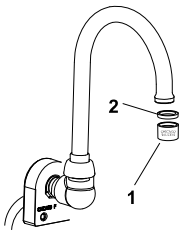

☞ **If 0.5 GPM is to be used, proceed to *Installation - Solenoid and Optional Valves, page 8.***

6 To convert outlet assembly to 2.2 GPM:

1. Disassemble outlet assembly using key (1).
2. Remove the 0.5 GPM cartridge (white screen) and replace it with the 2.2 GPM cartridge (2).
3. Install the rubber washer (3), adapter (4) and aerator gasket (5).

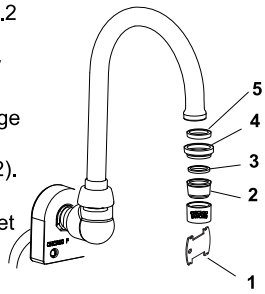

☞ **Proceed to *Installation - Solenoid and Optional Valves, page 8.***

INSTALLATION – LAVATORY FAUCET

1 Remove the locknut (1), washer (2), stilt washer (3) from the spout shank (4).

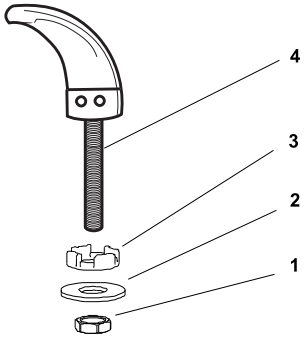

2 Install the faucet assembly into the deck hole. **Use plumbers putty to seal faucet to deck.**

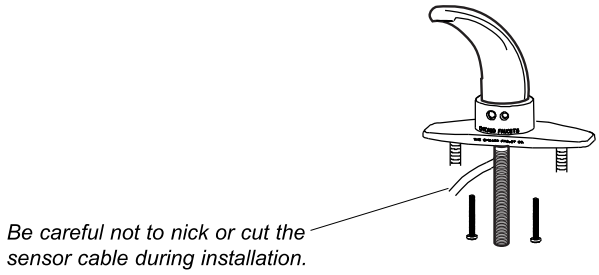

3 Install stilt washer (1) all the way up onto shank, crown side up. Position sensor cable (2) through one of the rounded slots in the stilt washer (1).

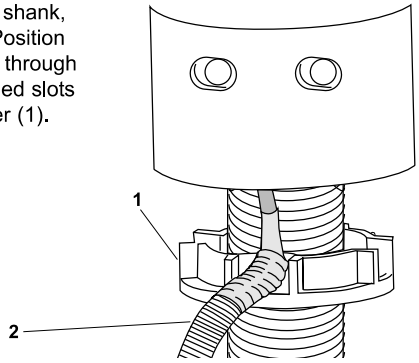

4 Install the shank washer (1) and locknut (2) onto faucet shank. Tighten locknut securely to prevent spout from rotating. If necessary, support spout base from above to prevent twisting.

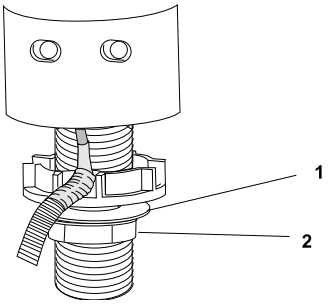

5 If faucet was installed with cover plate, secure cover plate with basin washers (1), flat washers (2) and locknuts (3).

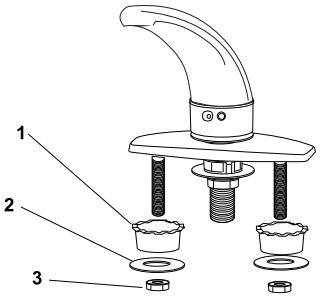

6 ⚠ **CAUTION**
Flush water lines before performing this step.

Attach the outlet assembly (1) and aerator gasket (2) to the spout. The outlet assembly is equipped from the factory with a 0.5 GPM cartridge (white screen). To configure the outlet with the 2.2 GPM cartridge (yellow screen) see step 7.

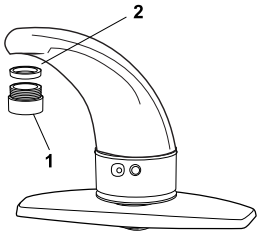

☞ **If 0.5 GPM is to be used, proceed to *Installation - Solenoid and Optional Valves, page 8.***

7 To convert outlet assembly to 2.2 GPM:
1. Disassemble outlet assembly using key (1).
2. Remove the 0.5 GPM cartridge (white screen) and replace it with the 2.2 GPM cartridge (2).
3. Install the rubber washer (3), adapter (4) and aerator gasket (5).

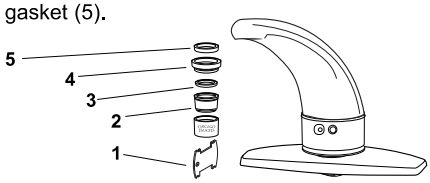

☞ **Proceed to *Installation - Solenoid and Optional Valves, page 8.***

INSTALLATION – SOLENOID AND OPTIONAL VALVES

1 Thread the union nut (1) of the solenoid assembly to the faucet shank (2). Use **Teflon tape** on the threads to ensure a leak-free joint. Make sure the solenoid is positioned for easy access. Tighten the union nut.

⚠ CAUTION

Do not use pipe dope on threads. The solenoid could become contaminated and will void any warranty.

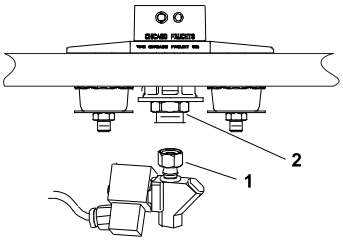

2 If required, install any optional equipment and connect to the solenoid. The valves listed here require only a single supply connection to the base fitting on the solenoid.

- Side mix valve (steps 3, 4, 5 & 6)
  - Catalog number 123-CP
- Mixing "Y" valve (step 7)
  Catalog number 560-045KJKRBF
- Thermostatic mixing valve (not shown)
  - Catalog number 119-NF

3 If equipped with a side valve, assemble the nut (1) and flat washer (2) to the valve shank. Install the side valve assembly up into the mounting plate and secure from the top with the chrome c-clip (3) provided.

NOTE: For single-hole application substitute threaded deck flange for C-clip.

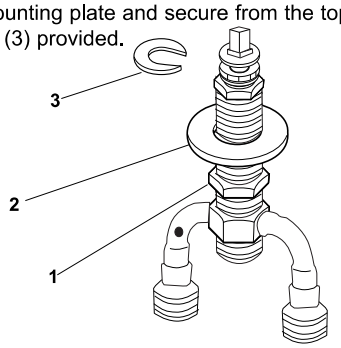

4 Assemble the chrome valve handle (1) to the side valve using the screw (2) and cap (3) provided.

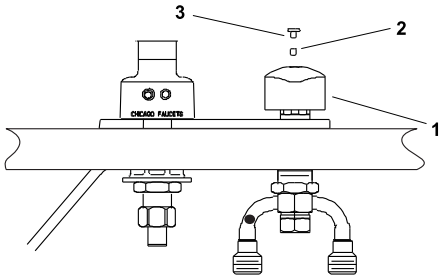

5 Attach the supply lines to side valve.

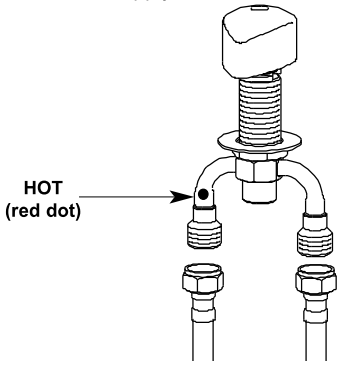

6 Connect the intermediate supply line (1) to the bottom outlet of the side valve and to the solenoid assembly inlet. Use Teflon tape on the threads to ensure a leak-free joint.

⚠ CAUTION

Do not use pipe dope on threads. The solenoid could become contaminated and will void any warranty.

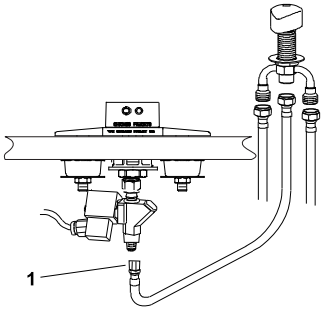

7 If used, assemble the "Y" valve (1) to the nipple (2) supplied, then connect the "Y" valve to the the solenoid assembly inlet. Use Teflon tape on <u>all</u> threads to ensure a leak-free joint.

⚠ CAUTION

Do not use pipe dope on threads. The solenoid could become contaminated and will void any warranty.

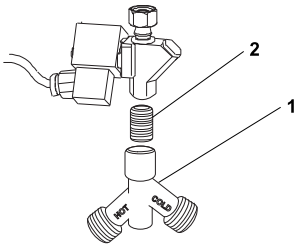

8 ☞ **Proceed to *Installation - Electronic Box (AC or Battery Operated, depending on model), page 9 or 10.***

INSTALLATION – ELECTRONIC BOX (AC)

1 Follow the directions on the electronic box mounting template supplied. Affix the template to the wall, either level with or above solenoid valve, and within 12" of the solenoid valve. When installing the 126-NF transformer, the electrical box should be within 6' of the sink. When installing the 128-NF transformer, the electrical box should be within 50' of the sink, if 18-gauge cable is used.

NOTE: For in-wall or multi-unit installations refer to instructions included with the transformer.

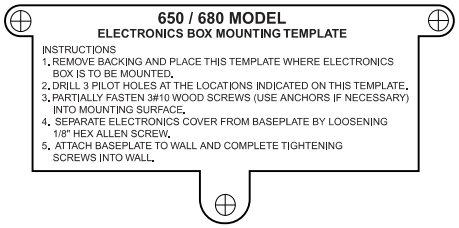

2 Install baseplate and mount the electronic box to the wall location chosen in step 1. Make sure transformer wires (1) are positioned in the baseplate channel (2) before mounting unit.

NOTE: When positioning baseplate, make sure there is enough room for drip loops in final installation. See Note in step 7.

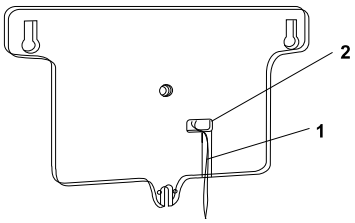

3 Remove the strain relief cover and screw (1) using hex key provided (2).

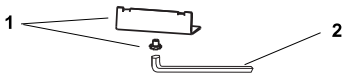

⚠ CAUTION

Do not attempt to operate multiple faucets using a 126-NF single transformer.

4 Install solenoid cable plug (1) into the smaller, telephone-style jack in the electronic box. Install faucet sensor cable plug (2) into the larger RJ-45 jack.

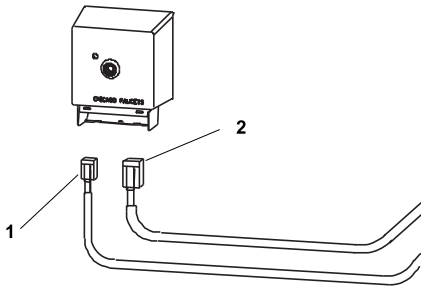

5 Attach strain relief cover (1) with screw (2) using hex key provided (3).

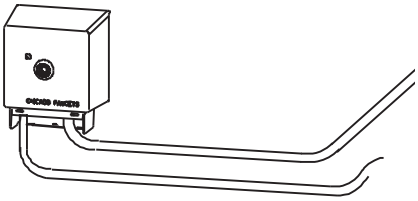

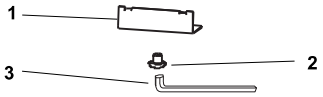

6 Feed the wires from the transformer through the baseplate. Connect the 1/4" spade terminal to the positive (+) terminal and connect the 3/16" spade terminal to the negative (-) terminal. Terminals are two different sizes and match corresponding terminal clips from transformer. Clips are not provided with the 128-NF transformer.

NOTE: The faucet will automatically calibrate when sensor cable is connected and power is supplied. See step 8.

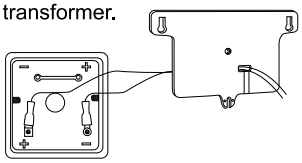

⚠ CAUTION

Faucet will automatically calibrate when sensor cable is connected and power is supplied. DO NOT place objects in front of collar sensor for first 30 seconds after power-up.

7 Re-attach the electronic box to the baseplate location using screw(1) and hex key provided (2).

NOTE: To ensure the electronic box is level with or above the solenoid valve, the cables should create a drip loop. The electronic box is designed with the wire connectors facing downward to ensure proper drip loops.

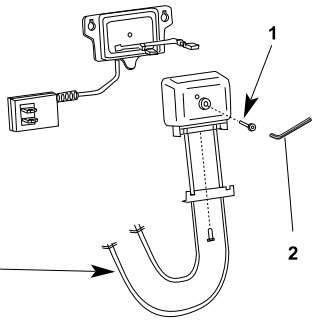

8

⚠ CAUTION

DO NOT turn on water supply until all electrical connections are made.

Plug the transformer into the applicable electrical receptacle.

Wait at least 30 seconds, then turn on the water supply.

NOTE: When power is initially supplied, the LED on the electronic box will blink and an audible indicator chirps twice per second whenever hand presence is detected. This will continue for 8 minutes and then stop.

☞ **Proceed to *FAUCET OPERATION*, page 12.**

INSTALLATION – ELECTRONIC BOX (BATTERY OPERATED)

1 Follow the directions on the electronic box mounting template supplied. Affix the template to the wall, either level with or above solenoid valve, and within 12" of the solenoid valve.

NOTE: When positioning baseplate, make sure there is enough room for drip loops in final installation. See Note in step 6.

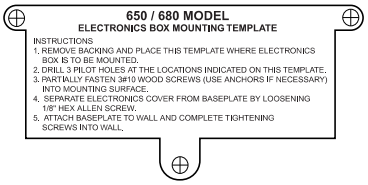

2 Install baseplate and mount the electronic box to the wall location chosen in step 1.
With baseplate

NOTE: When positioning baseplate, make sure there is enough room for drip loops in final installation. See Note in step 6.

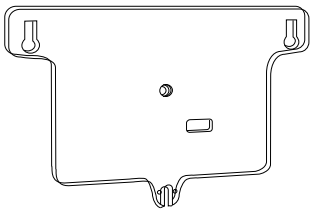

3 Remove the strain relief cover and screw (1) using hex key provided (2).

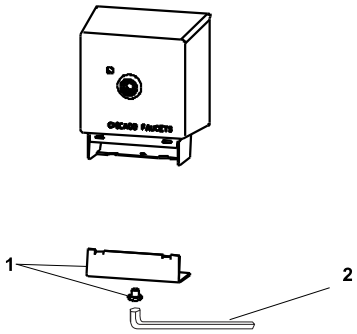

4 Install solenoid cable plug (1) into the smaller, telephone-style jack in the transformer. Install faucet sensor cable plug (2) into the larger RJ-45 jack.

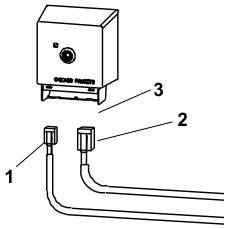

⚠ CAUTION
Faucet will automatically calibrate when sensor cable is connected. DO NOT place objects in front of collar sensor for first 30 seconds after power-up.

5 Attach strain relief cover (1) and screw (2) using hex key provided (3).

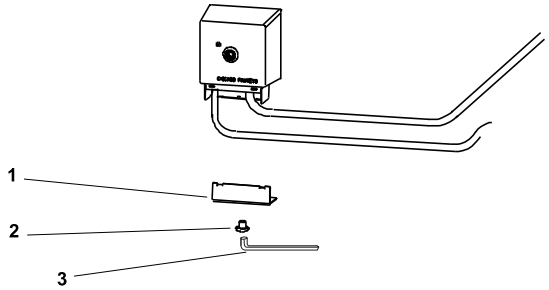

6 Install 4 "AA" alkaline batteries into battery holder. Observe battery polarity.

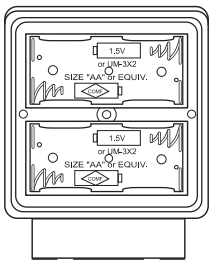

7 Mount the electronic box to the wall location using screw(1) and hex key provided (2).

NOTE: To ensure the electronic box is level with or above the solenoid valve, the cables should create a drip loop The electronic box is designed with the wire connectors facing downward to ensure proper drip loops.

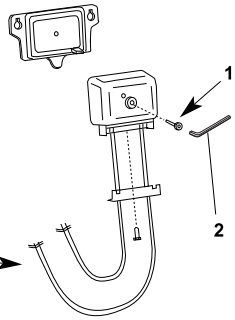

8 **⚠ CAUTION**
DO NOT turn on water supply until all electrical connections are made.

Turn on the water supply.

NOTE: When power is initially supplied, the LED on the electronic box will blink and an audible indicator chirps twice per second whenever hand presence is detected. This will continue for 8 minutes and then stop.

☞ **Proceed to *FAUCET OPERATION*, page 12.**

COMPLETED INSTALLATIONS

Gooseneck Faucet – Surface Mount (shown with cover plate)

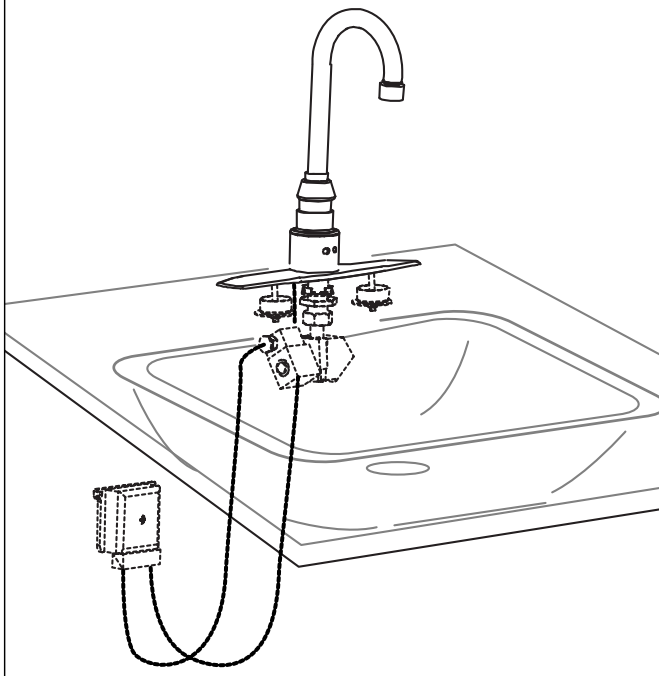

Gooseneck Faucet – Surface Mount (shown with cover plate & side valve)

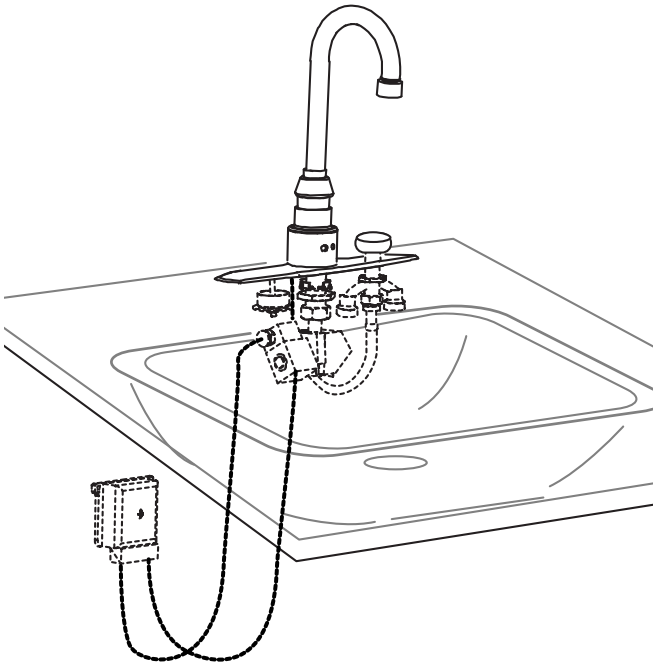

Gooseneck Faucet – Wall Mount

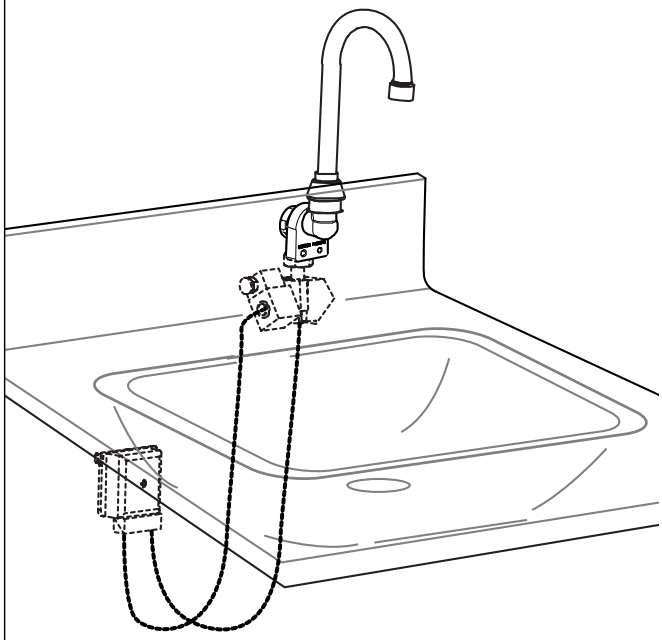

Lavatory Faucet (shown with cover plate)

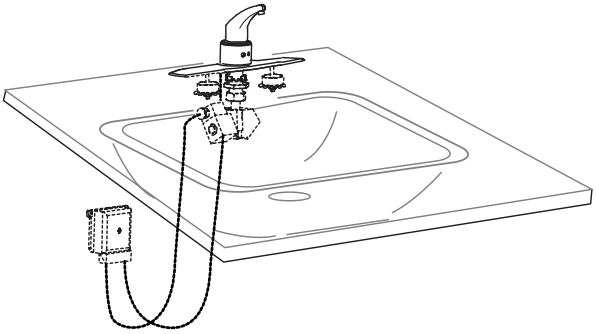

Lavatory Faucet (shown with cover plate & side valve)

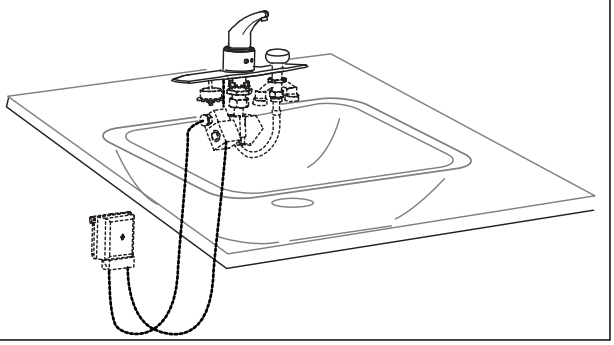

FAUCET OPERATION

Range Modes

- Normal - Gooseneck or Lavatory spout, 4-3/4" spout (factory default)
- Short - Gooseneck, 3-1/2" spout
- Far - Long Gooseneck, 5-3/8" spout
- Maximum - Long Gooseneck, 8" spout

Operating Modes

- Normal Motion Detecting Mode: water flows within 1/4 second after activating sensor (i.e., putting hands in front of collar) and continues to stay on as long as motion is detected. Maximum time is 45 seconds (factory default setting).
- Scrub Mode: water continues to flow for 60 seconds (default) after deactivating the sensor (removing hands).
- Metered Mode: water flows for 10 seconds (default) from first hand detection.
- Water Saver Mode: water flows for a maximum of 5 seconds starting from first hand detection and immediately turns off when hands are removed.

Additional Operating Features

- 12 second, no-motion turn off in normal mode
- Low-battery indication
- Battery life up to one year depending on use frequency.

CHANGING FAUCET OPERATION

In order to change any faucet option, the DIPswitch must be used (located inside the electronics cover assembly, see illustration this page).

Checking/Changing DIPswitch Settings

1. Remove the electronics cover (1) from the baseplate (2).
2. Lift the partition (3) out to expose the circuit board and DIPswitch.
3. To change a DIPswitch setting, use a small pointed object to move the appropriate DIPswitch to ON or OFF.

Faucet range and mode settings along with their corresponding DIPswitch settings are outlined in Table 1 and Table 2

Resetting Faucet Electronics

In order to reset the faucet electronics, a reset button located inside the electronics cover assembly must be pushed in (see illustration this page).

To reset faucet electronics:

1. Remove hex screw holding the electronics cover to the baseplate and remove cover.
2. Lift the partition out to expose the circuit board and reset button.
3. Make sure there are no objects in front of the collar sensor, then push the button to reset.
4. Wait 30 seconds for faucet to automatically calibrate to the environment.
5. Activate water flow by placing your hand in front of the sensor.
6. Place partition into the electronics cover.
7. Place the electronics cover onto the baseplate and secure with the hex screw.

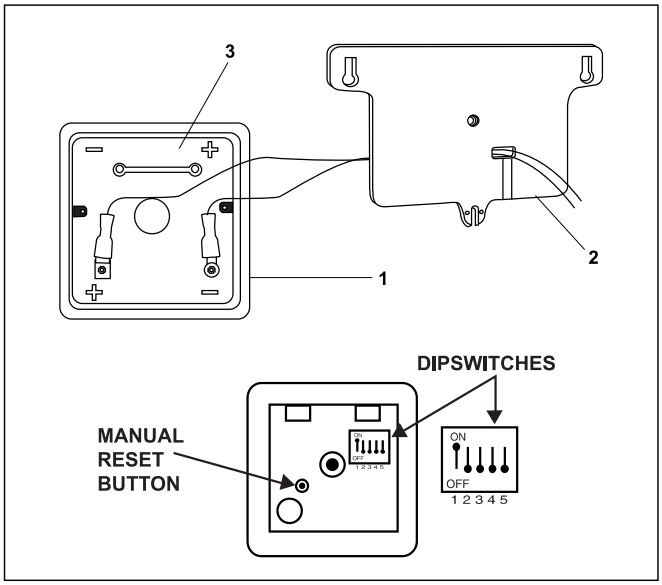

Electronics Cover Assembly & DIPswitch

Range	Short	Normal	Far	Maximum
Switch 1	off	on	on	off
Switch 2	off	off	on	on

Table 1 - Faucet Range

Modes	Normal Mode	Scrub Mode	Meter Mode	Water Saver Mode
Switch 3	off	on	off	off
Switch 4	off	off	on	off
Switch 5	off	off	off	on

Table 2 - Faucet Mode

NOTE: Resetting the faucet electronics causes loss of virtual settings and time in use, and will also start the 8 minute timer where the LED on the electronics box will blink and an audible indicator chirps twice per second whenever hand presence is detected. The optional Geberit Commander™ hand held maintenance tool can also be used to reset all faucet electronics.

The optional Geberit Commander™ handheld maintenance tool makes changing faucet operation settings easy, and provides access to additional faucet options such as delay times - all without opening the electronics cover assembly. For more information, please contact your Chicago Faucets dealer or visit **www.chicagofaucets.com**.

TROUBLESHOOTING

Whenever new batteries are installed, AC power is applied, or a manual reset button is pressed, the LED on the electronics cover will blink and an audible indicator chirps twice per second whenever hand presence is detected. After 8 minutes, the LED and buzzer function stops.

If an error occurs, the LED will blink and the buzzer will sound every 30 seconds to assist in diagnosing the problem. When corrective action is taken the LED and buzzer will stop.

The following chart provides details concerning the number of beeps and possible errors associated with them .

1 Beep: Indicates low battery.

2 Beeps: Calibration out of range (environment too reflective).

3 Beeps: Room infrared level out of range; too much sunlight, heat lamp present, etc.

4 Beeps: Solenoid short circuit.

5 Beeps: Solenoid unplugged or loose/broken solenoid connection.

See *Troubleshooting Chart* on pages 14 & 15 for further troubleshooting information.

Troubleshooting Chart

Problem	Check	Possible Solution
Water runs continuously.	Debris in solenoid (no beeps).	Disassemble solenoid and inspect/clean parts.
	Water pressure too high (no beeps).	Reduce pressure to under 80 PSI.
	Side mix valve installation (no beeps).	Attach side mix valve outlet to solenoid valve using flexible hose (page 8).
Faucet turns on by itself (ghosting).	Incorrect range setting for spout type and sink used (2 beeps).	Change range setting using DIPswitch (page 12) or Commander™ software.
No water flow.	Water not turned on (no beeps).	Turn on water supply.
	Solenoid cable not connected to electronics cover (5 beeps).	Check connection.
	Solenoid short circuit (4 beeps).	Replace electronics cover.
	Sensor cable not connected to electronics cover (no beeps).	Check connection.
	Inoperative sensor (no beeps).	Inspect collar wiring for signs of damage or corrosion. Replace if necessary.
	Inoperative electronics cover assembly (no beeps).	Replace cover assembly.
	Water pressure too high (no beeps).	Reduce pressure to under 80 PSI.
	Low battery voltage (DC only) (1 beep).	Replace batteries (DC only).
	6VDC transformer not properly connected to partition assembly (no beeps).	Use correctly sized terminal clips (page 9).
	Wiring of multiple unit 6VDC transformer (no beeps).	Faucets must be wired in parallel from transformer (transformer to each individual unit), not connected in a series.
	Check wiring polarity.	If polarity was reversed, replace partition (part no. 570-033KJKNF).
	While communicating with faucet, the Palm device was pulled away before communications ended (no beeps).	After 60 seconds, or another Palm Communication, the faucet will return to operating mode.
Range too short or too long.	Interference during automatic calibration (no beeps).	Remove interference; reset electronics using reset button (page 12) or Commander™ software. Allow 30 seconds for faucet to automatically re-calibrate.
	Incorrect range setting for type of spout and sink used.	Change range setting using DIPswitch (page 12) or Commander™ software.
	Lighting environment affecting sensor (3 beeps).	Change range setting using DIPswitch (page 12) or Commander™ software.

Problem	Check	Possible Solution
Faucet works in reverse.	Solenoid wiring on DIN connector (no beeps).	Replace solenoid.
Faucet turns off too soon.	Faucet operating mode (no beeps) or faucet range setting.	Change mode or range setting using DIPswitch (page 12) or Commander™ software.
Faucet stays on longer than normal.	Dirty solenoid valve (no beeps).	Clean internal parts or replace solenoid valve.
	Clogged spout outlet.	Clean outlet.
	Faucet in wrong mode (no beeps).	Change mode setting using DIPswitch (page 12) or Commander™ software.
Faucet stopped working.	Mounting of electronics cover (no beeps).	Electronics cover must be mounted to allow for drip loops for the sensor and solenoid cables (pages 9 & 10).
	Sensor cable connector.	Clean connector.
	No clicking sound from solenoid during hand presence (no beeps).	Reset electronics using reset button (page 12) or Commander™ software.
	Solenoid valve strainer.	Clogged strainer. Clean if necessary.
	Check if faucet outlet is clogged (no beeps).	Clean faucet outlet.
	Battery voltage (battery operated only).	Replace batteries if below 4.2 volts.
	Incorrect range setting for spout type and sink used (no beeps).	Change range setting using DIPswitch (page 12) or Commander™ software.
No Commander™ Palm communications.	Inoperative sensor (no beeps).	Replace sensor.

WARRANTY

PRICES - Prices quoted herein are subject to change without notice and all orders are accepted subject to prices prevailing at time of order entry.

TERMS OF PAYMENT - Terms are 2% 45 days 60 net. Cash discounts must be calculated on the total amount of the invoice, before transportation charges and any applicable taxes. A 1-1/2% per month service charge will be added to all past due invoices. Annual rate of 18%.

TAX NOTICE - Any manufacturers' or sales tax applicable thereto will be added to the prices and terms herein contained.

CREDIT APPROVAL - All orders are subject to credit approval by the CHICAGO FAUCET COMPANY'S Credit Department prior to acceptance of the order. Orders may be refused, delivery may be withheld or shipments stopped in transit on accepted orders without any liability on the Company's part, if, in its sole opinion, the buyer's ability to pay for the merchandise on the terms and conditions contained herein is in doubt. All New Accounts must submit a $500.00 net minimum order with credit and bank references.

SHIPPING AND HANDLING - All sales are F.O.B., shipping point. The Company will allow full freight at the prevailing CWT rate on shipments of Company's products with a net invoice value of $1,500.00 or 24 pieces, * when shipments are within the continental United States and have as destination the buyer's usual business address or designated job location. Freight allowed on shipments to Alaska shall be calculated F.A.S., Seattle, Washington. The use of the term "F.A.S., Seattle, Washington" in this paragraph shall not be deemed to impose any risk or obligation concerning the goods or the shipment thereof upon the Company after the delivery of the goods to the initial carrier. Under no circumstances will a direct C.O.D. shipment be made to the wholesaler's customer.

* Original P.O. must meet FFA terms. Subsequent additions will not be considered towards freight allowance.

Routing of shipments shall be determined at the sole discretion of the Company.

DELIVERY - Delivery to the initial carrier shall constitute delivery to the buyer. CHICAGO FAUCET COMPANY'S responsibility, insofar as transportation risks are concerned, ceases upon delivery in good order to such carrier, and all goods are shipped at the buyer's risk. The buyer is requested to check each incoming shipment carefully before acknowledging receipt from the carrier. If goods are visibly damaged the buyer should insist that written confirmation of the damage be noted on the freight bill by the carrier. If concealed damage is noted after unpacking, the buyer should immediately notify the carrier involved and obtain verification of the damage from the carrier.

Claims for shortages in orders will not be considered unless presented to the Company within 30 days after receipt of goods by the buyer.

DAMAGE - All claims for damage in transit, shortage, or nondelivery must be filed against the carrier by the buyer.

CHICAGO FAUCET COMPANY will not be responsible for delay in shipment of goods, or for any damages suffered by reasons thereof, when such delay is occasioned by accident, fire, flood, embargo, strike, war, labor stoppages, inadequate transportation, shortage of materials, delay or default on the part of vendors, government regulations or any other cause beyond its control.

CHICAGO FAUCETS BRAND PRODUCTS ARE SUBJECT TO THE FOLLOWING WARRANTIES:

LIMITED WARRANTY - The CHICAGO FAUCET COMPANY ("Chicago Faucets") extends to the original consumer the following warranties for Genuine Chicago Faucets manufactured products and components, or other components under the Chicago Faucets Warranties, (collectively, the "Products") used in commercial or residential applications.

LIFETIME FAUCET WARRANTY - The "Faucet", defined as any metal cast, forged, stamped or formed portion of the Product, not including electronic or moving parts or water restricting components, or other components covered under other Chicago Faucet warranties, is warranted against manufacturing defects for the life of the Product.

FIVE YEAR CARTRIDGE WARRANTY - COMMERCIAL _ The "Cartridge", defined as the metal portion of any Product typically referred to by the product numbers containing 1-099, 1-100, 1-310, 377X, 217X and 274X, excluding any rubber or plastic components, is warranted against manufacturing defects for a period of five (5) years from the date of Product purchase. All Cartridges included in Chicago Faucet's Single Control or Shower Products are also warranted against manufacturing defects for a period of five (5) years from the date of Product purchase.

LIFETIME CARTRIDGE WARRANTY - RESIDENTIAL - For products used in Residential applications, the "Cartridge", as described above, is warranted for the lifetime of the faucet.

ONE-YEAR FINISH WARRANTY - COMMERCIAL - For Products used in commercial applications, the finish of the Product is warranted against manufacturing defects for a period of one-year from the date of Product purchase. PVD finishes installed in public or commercial areas carry a one-year warranty from date of installation.

ONE-YEAR FINISH WARRANTY - RESIDENTIAL - PVD finishes installed in public or commercial areas carry a one-year warranty from date of installation.

FIVE-YEAR FINISH WARRANTY - RESIDENTIAL - For Products used in residential applications, the finish of the Product is warranted against manufacturing defects for a period of five (5) years from the date of Product purchase. ForeverShine™ finishes installed in residential-use applications are warranted not to corrode, tarnish or discolor for the life of the product.

ELECTRONIC FAUCETS MECHANICALS WARRANTY - Are warranted for 5 years from the date of installation.

ELECTRONIC FAUCETS FINISHES WARRANTY - Are warranted for one-year from the date of installation.

ELECTRONIC FAUCETS ELECTRONICS AND SOLENOID WARRANTY - Are warranted for one-year from the date of installation.

OTHER WARRANTIES - All other Products not covered above are warranted against manufacturing defects for a period of one (1) year from the date of Product purchase.

GEBERIT BRAND PRODUCTS ARE SUBJECT TO THE FOLLOWING WARRANTIES:

KITCHEN ACCESSORIES shall be free from defective material and workmanship for a period of 1-year from date of installation.

BATH WASTE and OVERFLOW products carry a limited lifetime warranty on the material and mechanism

Tessera™ concealed tank & carrier units carry a 10-year limited warranty on the flushing mechanisms and limited lifetime warranty on the tank and carrier.

PLATED FINISHES carry a one-year limited warranty from date of installation with the exception of those finishes designated as ForeverShine™.

ForeverShine™ finishes installed in residential-use applications are warranted not to corrode, tarnish or discolor for the life of the product.

ForeverShine™ finishes installed in commercial use applications are warranted for a period of one-year from date of installation.

ELECTRONIC FAUCETS, FLUSHOMETERS AND METERING MECHANICALS WARRANTY - Are warranted for 5 years from the date of installation.

ELECTRONIC FAUCETS FINISHES WARRANTY - Are warranted for one-year from the date of installation.

ELECTRONIC FAUCETS ELECTRONICS AND SOLENOID WARRANTY - Are warranted for 3 years from the date of installation.

PRESSURE ASSIST TOILET SYSTEMS - Are warranted for 5 years from date of installation (pressure vessel), limited lifetime for the carrier plus a one-year warranty on toilet bowl and flush actuator plate.

Chicago Faucets will either replace or repair the defective equipment or refund the purchase price, at its option, if an inspection by Chicago Faucets or its authorized representative discloses any manufacturing defects in material or workmanship during this period. These provisions do not include the battery shipped with the Electronic Products. Chicago Faucets will not be liable for any labor or other expenses not specifically stated above and disclaim any responsibility for incidental or consequential damages.

Warranties implied by law, including that of merchantability are expressly limited to the period of this warranty. This limitation and exclusion does not apply in those states that do not allow limitations on the duration of implied warranties. Or the exclusion may not apply to you. This warranty gives you specific legal rights and you may have other rights, which vary, from state to state.

RETURNED GOODS - Merchandise may not be returned to the Company for credit unless the buyer obtains prior written approval from the Company. Such approval will be granted only when material to be returned is a Standard or MTO product and is listed in the current price sheets. Credit will be issued on all material returned by permission, at the prevailing price at time of purchase, less a handling charge of up to 35%. No credit whatever will be allowed on products designated as Custom (Custom products are products not designated as Standard or MTO) which have been shipped according to customers' specification. Material, which is marred or damaged, will not be accepted. All transportation costs for returned goods must be paid by the buyer.

ORDER MODIFICATION/CANCELLATION - Orders for Standard and MTO products can be modified or cancelled up to the time the order is being processed for shipment. A Chicago Faucets customer service representative must confirm the status of order to be cancelled or changed in order to avoid any restocking fees or charges. Changes to the order can potentially extend the acknowledged availability date. Once entered, Custom products are non-cancelable, and will be shipped and billed to the customer.

The Company reserves the right to make reasonable changes of any kind in its products and their packaging without notice.

MINIMUM CHARGE - No invoice will be made for less than $100.00 (One Hundred Dollars Net) on faucets, valves and fittings or repair parts.

NOTE: Possession of this price sheet by any person is not to be construed as an offer to sell him or anyone else, the goods listed herein at prices stated.

TEX•COTE®
TEXTURED COATINGS OF AMERICA, INC.

WASH-GUARD™ COOLWALL® System

DESCRIPTION

The WASH-GUARD™ COOLWALL® system is a waterborne, smooth finish high-performance coating system specifically designed to withstand the harsh conditions of commercial car-washes. This is a three-coat, high-build, concrete coating system offering the ultimate in protection from water, soaps, acids, alkali, oil, grease, and salt spray. The WASH-GUARD™ coating system uses the patented heat-reflective and fade resistant technology only offered through TEX•COTE®. The recommended system is comprised of WASH-GUARD™ CLASSIC or TEX-BOND™ PRIMER as the base-coat, WASH-GUARD™ COOLWALL® SUPER-COTE™ heat reflective finish as the intermediate coat, and WASH-GUARD™ CLEAR-GARD as the final coat.

FEATURES

- May be used on interior or exterior surfaces
- High performance water-based coating system
- Mildew, fungus, and algae resistance means less maintenance
- Resistant to water, chemicals, and stains
- Long lasting durability
- Resistant to ultraviolet light

BENEFITS

- Long lasting colors
- Long term protection
- Heat reflective
- Easy to clean

RECOMMENDED OVER

Concrete, CMU Block Construction, Tilt-up/ Precast Concrete, cement fiberboard, brick, PVC panels, tile, and other manufacturer approved substrates

APPLICATION

Application Equipment: The WASH-GUARD™ COOLWALL® system can be applied by brush, roller, or commercial grade airless sprayer.

Surface Preparation: New concrete should cure a minimum of 30 days prior to applying this coating system. All loose, flaking or oxidized paint should be removed. **Excessive layers of existing coating may require sand blasting, water blasting, scraping or wire brushing to remove.** The WASH-GUARD™ System can be applied over latex paints that are in good condition, but it is not recommended over existing epoxy or alkyd coatings. The coating type can be tested using the solvent Xylene. Saturate the tip of a cloth with Xylene and rub the painted surface several times. If the coating comes off on the rag, it is latex and ok to coat. Large cracks, holes and voids greater than 1/8 ”in substrate must be filled with an appropriate cement patching compound. Cracks less than 1/8 ” in substrate should be filled with TEX•COTE® FLEX-PATCH®. **Ensure that all cracks, crevices, openings and voids including areas around vacuum or other units bolted or attached to surface be filled or patched, prior to application of this system. All surfaces must be sound, clean and dry prior to coating and moisture content should not exceed 50%, otherwise blushing or whitening of the final film may occur.** Contaminants such as dust, dirt, mildew, form oils, loose substrate, etc., should be removed prior to coating.

WASH-GUARD™ Classic Primer: WASH-GUARD™ CLASSIC PRIMER should be applied as a primer and sealer for new concrete surfaces that have cured a minimum of 30 days. Concrete may be damp, but not saturated as blushing or whitening of the final CLEAR-GARD may occur. Apply at a total rate of 80-100 square feet per gallon or 16-20 mils wet, working the material into the pores of the surface so that it is completely sealed. This should be a pinhole free film. The primer should be coated within two weeks, otherwise re-priming will be necessary.

WASH-GUARD™ Classic Primer Drying/ Curing Times: Dry to touch 1-2 hours. Re-coat 4-6 hours dependent on temperature and humidity.

WASH-GUARD™ TEX-BOND™ Primer: TEX-BOND™ Primer should be used in place of CLASSIC Primer on surfaces other than masonry including PVC, vinyl, and ceramic tile. Apply at a total rate of 350-400 square feet per gallon either by roller or airless spray. Make sure that all surfaces are free from contaminants prior to priming. For ultra-slick surfaces such as glazed ceramic tile, adhesion testing should be performed: Apply a small, 6 ” x 6 ” area of TEX-BOND™ Primer to the surface and allow 24 hours to cure. Using a utility knife, cut an X into the dried primer, then press masking tape firmly on to the cut section and quickly remove tape. Examine for any signs of primer delamination.

WASH-GUARD™ TEX-BOND™ Primer Drying/ Curing Times: Dry to touch in 2 hours. Re-coat 4-6 hours dependent on temperature and humidity.

WASH-GUARD™ COOLWALL® SUPER-COTE™ Heat Reflective Finish: WASH-GUARD™ COOLWALL® SUPER-COTE™ should be applied as an intermediate coating at 175-225 square feet per gallon or 7-9 mils wet, maintaining a wet edge at all times. Some deep tone colors may require additional coats to achieve a uniform appearance. A wet edge should be maintained during spraying, brushing or rolling at all times. To prevent lap marks, avoid starting and stopping midway on walls, and continue to a “natural break” such as a corner. On large areas, two (2) people spraying simultaneously are recommended to avoid lap marks and spray patterns. If rolling, apply a fully loaded roller in vertical strokes initially, then cross roll for even film, ending with vertical strokes.

WASH-GUARD™ COOLWALL® SUPER-COTE™ Drying/ Curing Times: Dry to touch 2 hours. Re-coat 4-6 hours dependent on temperature and humidity.

WASH-GUARD™ CLEAR-GARD: WASH-GUARD™ CLEAR-GARD should be applied as a two-coat system at a rate of 350-400 square feet per gallon per coat (allowing adequate cure between coats). This is a 2-component coating, and therefore Part-A and Part-B must be

©2013 Textured Coatings of America, Inc. For professional use only. Not for sale or use by the general public. 04/2013

APPLICATION (cont.)

mixed thoroughly with the help of a mixing blade and drill just prior to application. Begin mixing Part-A with drill, and slowly add Part-B, keeping a good vortex the entire time. Continue mixing for 2-3 minutes. **Once mixed, the material must be applied within two hours. Apply by rolling the material evenly with a ½" nap quality roller cover, then back roll to force material into any voids and to achieve a pinhole free, protective film. Two-coats are recommended for best performance and adequate protection.** NOTE: excessive film thickness will cause cloudy films and may not allow proper cure! Clean wet material and tools with water immediately after use. Due to the nature of this material, it is extremely difficult to remove or clean once dry.

WASH-GUARD™ CLEAR-GARD Drying/ Curing Time (Under Ideal Conditions):
Dry to touch and re-coat: 24 hours at 70 F / 50% RH
Pot life, once mixed ~ **2 hours**
Dry hard: 24 hours at 70 F / 50% RH
Return to Service: 48 hours at 70˚F/ 50% RH
Fully cured after 10-14 days
Ready for use: 24 hours after the last coat of clear has been applied
Clean-Up: Use water for wet material.
CAUTION: Do not close the lid on any unused paint as pressure will build up in the can.

TECHNICAL DATA

Physical Properties	WASH-GUARD™ Classic Primer	WASH-GUARD™ COOLWALL® SUPER-COTE™	WASH-GUARD™ CLEAR-GARD
Gloss	Flat	Satin	High-Gloss Finish
Weight per gallon	11.5-12.0 lbs	9.3-10.8 lbs	8.5-9.0 lbs
Solids by Volume	49-51%	33-37%	44-46%
Solids by weight	64%	40-52%	
VOC	<100 grams/ Liter	<50 grams/ Liter	<5 grams/ Liter
Moisture Vapor Permeability	7.5 Metric perms	7.5 Metric perms	2.8 Metric perms
Carrier	Water	Water	Water
Total Solar Reflectance* (TSR) *Percentage increase as compared to conventional acrylic paints.		Light Colors 25%-35% Medium Colors 55%-65% Dark Colors 100%	

WASH-GUARD™ COOLWALL® SUPER-COTE™ Applicable Standards American Society for Testing Materials (ASTM)

Test Method	Property	Result
ASTM D2565-99-T-1, C#4	Accelerated Weathering	5000 Hours—Passed
ASTM B117	Salt Spray Resistance	100 Hours—Passed
ASTM D714	Blistering Resistance	100 Hours—Passed
ASTM D610	Rusting Resistance	100 Hours—Passed
ASTM D968	Abrasion Resistance	825 liters falling sand
ASTM D3273/ D3274	Mold & Mildew Resistance	28 Days—Rating 10, no growth
ASTM D6940	Wind Driven Rain Resistance	Passed
ASTMC67/D2794	Freeze-Thaw Resistance	50 cycles—Passed
ASTM D4585	Humidity Resistance	100 Hours—Passed
ASTME96	Permeability	Passed
ASTM C1305	Crack Bridging	No cracks, separation or loss of film
ASTM D4803-97	Total Solar Reflectance	Surface wall temperature reduced up to 40 degrees Fahrenheit depending on color and geographical location as compared to commercial acrylic paint.

©2013 Textured Coatings of America, Inc. For professional use only. Not for sale or use by the general public. 04/2013

TECHNICAL DATA (cont.)

BEST PERFORMANCE

- **FOR APPLICATION TO VERTICAL SURFACES ONLY. NOT MEANT FOR HORIZONTAL SURFACES WITH NO SLOPE OR WHERE STANDING WATER IS PRESENT.**
- **IT IS CRITICAL THAT CONCRETE SURFACES ARE FREE OF MOISTURE (less than 50%) PRIOR TO APPLICATION! Ensure that all cracks, crevices, openings and voids be filled or patched, including areas around vacuum or other units bolted or attached to surface receiving WASH-GUARD coating, prior to application of this system. Excessive moisture may result in hazy or milky appearance in the CLEAR-GARD. For any CMU block walls make sure that the top portion of the wall is capped or filled to prevent water intrusion and moisture build-up within the wall cavity.**
- Do not apply material when snow, rain or freezing conditions are imminent. Wet conditions combined with cold temperatures may cause improper curing of product. Protect product from freezing.
- Air and surface temperature during application shall be 45˚F and rising, and not exceeding 100˚F.
- Allow new concrete to cure a minimum of 30 days prior to coating.
- DO NOT APPLY PRODUCT HEAVIER THAN STATED OR A CLOUDY FILM MAY OCCUR. TAKE CARE TO ROLL EVENLY.

WASH-GUARD™ CLEAR-GARD ASTM D1308—Effect of Household Chemicals

Chemical	Results
Gasoline	No effect
Motor Oil (Pennzoil)	No effect
Antifreeze (Peak)	No effect
Brake Fluid (Pennzoil)	No effect
Coffee (Black)	No effect
Cola (Coke)	No effect
Ketchup (Heinz)	No effect
Mustard (Gulden's)	No effect
Sun Tan Oil (Hawaiian Tropic)	No effect
0.5 N Sodium Hydroxide	No effect
10% Hydrochloric Acid	No effect
10% Hydrofluoric Acid	No effect

ORDER INFORMATION

Packaging: WASH-GUARD™ CLASSIC or TEX-BOND™ Primer and WASH-GUARD™ COOLWALL® SUPER-COTE™ are both available in one (1) or five (5) gallon containers. WASH-GUARD™ CLEAR-GARD is only available in 0.9 gallon kits.

Coverage Rates: See information under Application section.

Shelf Life: Twelve month shelf under proper storage conditions. Containers must be stored upright and maintained between 40ºF – 110ºF.

SAFETY

Do not breathe spray mist. Wear appropriate gloves and eye protection during application. Wash thoroughly after handling.

First aid:
In case of eye contact, flush immediately with large quantities of water for at least 15 minutes. Seek medical attention if blurring or redness continues.

VOC COMPLIANCE

All TEX•COTE® products comply with federal and state Volatile Organic Compound (VOC) rules and regulations.

WARRANTY

Upon completion of application of coating in accordance with the manufacturer's recommendations, Textured Coatings of America, Inc. will extend its limited commercial warranty for product replacement as a results of a defect in the material. The manufacturer must be notified prior to the application of the coating and the application must be in compliance with manufacturer's recommendations for installation. TEX•COTE® shall have no obligation to contribute or to otherwise participate in labor or cost associated with effecting repairs. Specimen copy of material warranty is available upon request.

TEX•COTE®
TEXTURED COATINGS OF AMERICA, INC.
CORPORATE OFFICES & EASTERN PLANT
2422 East 15th Street Panama City, Florida 32405
Tel: (850) 769-0347 Fax: (850) 913-8619

COMMERCIAL SALES OFFICE
4101 Ravenswood Road, Suite 218,
FT. Lauderdale, Florida 33312
Tel: (954) 581-0771 Fax: (954) 581-9516

WESTERN PLANT
5950 S. Avalon Blvd.
Los Angeles, California 90003
Tel: (323) 233-3111 Fax: (323) 232-1071

©2013 Textured Coatings of America, Inc. For professional use only. Not for sale or use by the general public. 04/2013

TEX•COTE®
TEXTURED COATINGS OF AMERICA, INC.

Transportation Products

XL 70® BRIDGE COTE® (Solvent)

DESCRIPTION

TEX•COTE® XL 70® BRIDGE COTE® is a one-component, ready to use concrete / masonry protective coating. This material is utilized for the protection and beautification of bridges, above-grade exterior surfaces such as concrete walls, columns, spandrels, median dividers, curbs, retaining walls, etc. TEX•COTE® XL 70® BRIDGE COTE® reduces the cost of rubbing, grouting and sacking of concrete. It helps minimize surface irregularities and will not internally support fungus or mildew. Available in smooth, sand, fine, and coarse textures.

FEATURES

- One coat application
- Apply to green or damp concrete surfaces
- Breathable film
- Tremendous bond with concrete
- Lasts years longer than traditional paints and coatings

BENEFITS

- Lower application costs
- Reduced application time
- Lower maintenance costs
- Prevents concrete spalling
- Protects from UV, moisture, salts
- Suitable for high humidity areas
- Can be applied in cold weather
- Primerless application

RECOMMENDED OVER

Concrete and other manufacturer approved surfaces.

APPLICATION

Spray On Application

Provide spray equipment similar to Graco President 10:1 pump or GM 1030 for smooth, sand, fine, and coarse textures. High volume commercial grade airless spray equipment may be used for the smooth texture version. TEX•COTE® application manual available upon request.

Roll-On Application

Smooth or fine texture may be applied with standard medium or long nap roller.

Surface Preparation

Surface preparation by the general contractor, prior to the application of an applied finish coating, shall consist of a general surface finish in accordance with the specific requirements of the state transportation department or governmental agency.

Surface to be coated shall be free from efflorescence, flaking coatings, oil, curing compounds, release agents and other deleterious substances prior to the application of the TEX•COTE® XL 70® BRIDGE COTE®. Curing compound and release agent must be removed and may require light sandblast or water blast at a minimum 2500 PSI or greater. Test the wall for coating acceptability prior to application of coating. This can be done by spraying the wall with water. If the water soaks into the wall, the wall is properly prepared, and can be coated when dry. If the water beads up and is repelled, the wall requires further cleaning prior to application of the coating. Sack and patch shall not be applied over the coating. This practice may void warranty. All sacking and patching should be completed prior to coating application

Application

Apply at a rate of 50 +/- 10 sq. ft./gal., depending upon porosity and textured desired. Manufactured to meet Federal Specification TTC-555B and various performance tests listed in the technical data. A one-coat application at 50 square feet/gallon develops a 15-mil dry film thickness. Dry to touch: 48 hours; full cure typically 21 to 30 days. The approved coverage rate for TEX•COTE® XL 70® BRIDGE COTE® may vary in different states and regions. Please consult the governing transportation department or governmental agency for their requirements.

Additional Applications

TEX•COTE® XL 70® BRIDGECOTE® may be applied over RAINSTOPPER® Silane or Siloxane penetrant sealers. Also, TEX•COTE® GRAFFITI GARD® Protection Systems may be used over TEX•COTE® XL 70® BRIDGECOTE® after a 21 day minimum cure under ideal conditions. Consult your local representative for proper application procedures and specifications.

Clean Up

Use mineral spirits for wet material. Use methyl ethyl ketone (MEK) for dry material.

BEST PERFORMANCE

Apply TEX•COTE® XL 70® BRIDGE COTE® under the following conditions:

1. Do not thin XL70® BRIDGE COTE® and do not use as grout.
2. Do not mix XL70® BRIDGE COTE® in a drum with another type of paint.
3. Agitate XL70® BRIDGE COTE® thoroughly prior to use.
4. May be applied over a damp, but not wet with liquid water, surface.
5. Application temperature is above 20°F (-6°C).
6. Do not apply if rain is imminent or apply over frozen surface.
7. Do not apply material when snow, rain and freezing are imminent. Wet conditions combined with cold temperatures may cause improper curing of product.
8. Backside of retaining walls shall be waterproofed with asphalt type below grade sealer.
9. In cool weather conditions, 5-gallonpails are recommended for ease of use.

©2015 Textured Coatings of America, Inc. For professional use only. Not for sale or use by the general public. 03/2015

TECHNICAL DATA

Table 1

- Federal Specification TTC-555B
- ASTM C672-Scaling Resistance 50 cycles
- AASHTO T259/T260 Chloride Ion-Penetration Resistance
- ASTM G-153 Twin Arc Weatherometer Exposure 10,000 Hours
- Mississippi Highway Department Freeze/Thaw Method 378 Cycles
- ASTM B-117 Salt Spray Resistance 3,000 Hours
- ASTM D968-81 Abrasion Resistance 2,000 Liters - Falling Sand
- GSA Exception No. 1 to TTC-555B Accelerated Alkali Resistance-Passed
- Infrared Spectrum -Typical
- TTP-29 Fungus Growth Resistance 21 Days-Passed

Table 2

Physical Property	Typical Result
Solvent	Aliphatic
Solids, by Weight	71%
Solids, by Volume	57.0%
Weight per gallon	Max. 10.0 ± 0.5 lbs.
Moisture Vapor Permeability	5.6 Perms
VOC Content	400 grams/liter maximum

ORDER INFORMATION

Colors

TEX•COTE® XL 70® BRIDGE COTE® is available in TEXCOTE standard decorative colors, Federal shade colors and custom colors upon request.

Textures

Available in Smooth, Sand, Fine and Coarse Textures.

Container Size

Five (5) gallon pails as well as fifty-five (55) gallon drums.

Shelf Life

Twelve (12) month shelf life based on the following:

- Containers are sealed, upright and stored in a dry place.
- Maintain temperature of 45°F to 100°F (7°C to 38°C); avoid freezing.
- Any skins formed on surface of material ust be removed prior to moving containers or mixing.

SAFETY

Warning

TEX•COTE® XL 70® BRIDGE COTE® is a combustible in liquid and vapor form. Keep away from heat and flames. Vapor is harmful. Use with adequate ventilation. View Material Safety Data Sheet before using material. Smoking in area where this material is used should be strictly prohibited. Contains petroleum distillates, crystalline silica and lime.
Keep out of reach of children.

First aid

If you experience difficulty in breathing, leave the area to obtain fresh air. If continued difficulty is experienced, get medical attention immediately. In case of eye contact, flush immediately with plenty of water for at least 15 minutes and get medical attention. For skin, wash thoroughly with soap and water. If swallowed, get medical attention immediately. Do not induce vomiting.

VOC COMPLIANCE

All TEX•COTE® products comply with federal and state Volatile Organic Compound (VOC) rules and regulations. Please contact your nearest TCA office for assistance on the local VOC compliance in the area of intended use.

WARRANTY

Upon completion of application of coating in accordance with the manufacturer's recommendations, Textured Coatings of America, Inc. will extend its limited commercial warranty for product replacement as a results of a defect in the material. The manufacturer must be notified prior to the application of the coating and the application must be in compliance with manufacturer's recommendations for installation. TEX•COTE® shall have no obligation to contribute or to otherwise participate in labor or cost associated with effecting repairs. Specimen copy of material warranty is available upon request.

TEX•COTE®
TEXTURED COATINGS OF AMERICA, INC.
CORPORATE OFFICES & EASTERN PLANT
2422 East 15th Street Panama City, Florida 32405
Tel: (850) 769-0347 Fax: (850) 913-8619

COMMERCIAL SALES OFFICE
4101 Ravenswood Road, Suite 218,
FT. Lauderdale, Florida 33312
Tel: (954) 581-0771 Fax: (954) 581-9516

WESTERN PLANT
5950 S. Avalon Blvd.
Los Angeles, California 90003
Tel: (323) 233-3111 Fax: (323) 232-1071

©2015 Textured Coatings of America, Inc. For professional use only. Not for sale or use by the general public. 03/2015

Z100

15 [381] DIAMETER MAIN ROOF DRAIN LOW SILHOUETTE DOME

Bid 12072-483

SPECIFICATION SHEET

TAG _____

Dimensional Data (inches and [mm]) are Subject to Manufacturing Tolerances and Change Without Notice

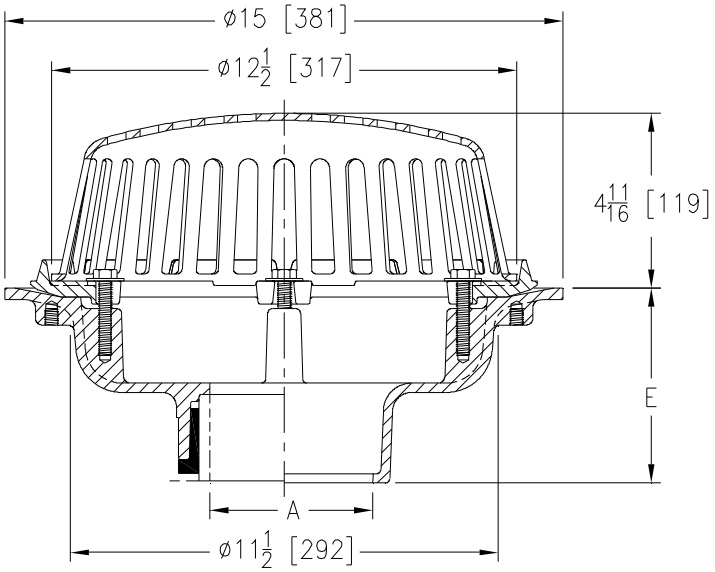

A Pipe Size In.	Approx. Wt. Lbs. [kg]	Dome Open Area Sq. In. [cm²]
2,3,4 [51,76,102]	26 [12]	103 [665]
5,6 [127,152]	27 [12]	
8 [203]	28 [13]	

ENGINEERING SPECIFICATION: ZURN Z100
15 [381] Diameter roof drain. Dura-Coated cast iron body with combination membrane flashing clamp/gravel guard and low silhouette Poly-Dome.

OPTIONS (Check/specify appropriate options)

PIPE SIZE	(Specify size/type)	OUTLET	E BODY HT. DIM.
2 thru 6,8 [51 thru 152,203]	_____ IC	Inside Caulk	5 1/4 [133]
2 thru 6,8 [51 thru 152,203]	_____ IP	Threaded	3 3/4 [95]
2 thru 6,8 [51 thru 152,203]	_____ NH	No-Hub	5 1/4 [133]
2,3,4 [51,76,102]	_____ NL	Neo-Loc	4 9/16 [116]
6 [152]	_____ NL	Neo-Loc	5 7/16 [112]

PREFIXES

_____ Z D.C.C.I. Body with Poly-Dome*
_____ ZA D.C.C.I. Body with Aluminum Dome
_____ ZC D.C.C.I. Body with Cast Iron Dome
_____ ZRB D.C.C.I. Body with Plain Bronze Dome

SUFFIXES

_____ -AC Angular Underdeck Clamp
_____ -AR Acid Resistant Epoxy Coated
_____ -AW 3/4 [19] to 4 [102] Adj. Water Level Regulator (Specify Height) (ZC Only)
_____ -BS Bronze Mesh Screen Over Dome
_____ -C Underdeck Clamp
_____ -DE Deck Extension
_____ -DP Top-Set® Deck Plate (Replaces both the -C and -R)
_____ -DR Top-Set® Drain Riser
_____ -DX Dex-o-tex Flange
_____ -E Static Extension 1 [25] thru 4 [102] (Specify Ht.)
_____ -EA Adjustable Extension Assembly 2 1/8 [54] thru 3 1/2 [89]
_____ -EB Top-Set® Adjustable Extension Assembly
_____ -FG Flush Grate (Replaces Dome Strainer)
_____ -G Galvanized Cast Iron
_____ -GD Galvanized Cast Iron Dome (ZC Only)
_____ -HD 6 3/4 [171] High Aluminum Dome Strainer (148 Sq. In. [955 cm²] Open Area) (ZA Only)
_____ -R Roof Sump Receiver
_____ -SC Secondary Clamp Collar
_____ -SS Stainless Steel Mesh Screen Over Dome
_____ -ST Dome with Solid Top (ZA, ZC & ZRB Only)
_____ -TC Neo-Loc Test Cap Gasket (2 - 4 [51 - 102] NL Bottom Outlet Only)
_____ -VP Vandal-Proof Secured Top
_____ -W2 2 [51] Internal Water Dam
_____ -W3 3 [76] Internal Water Dam
_____ -W4 4 [102] Internal Water Dam
_____ -84 Stainless Steel Perforated Gravel Guard
_____ -85 Stainless Steel Perforated Extension
_____ -89 2 [51] High External Water Dam
_____ -90 90° Threaded Side Outlet Body (2 thru 6 [51 or 152])

*REGULARLY FURNISHED UNLESS OTHERWISE SPECIFIED

REV. M DATE: 2/28/08 C.N. NO. 98161

DWG. NO. 59285 PRODUCT NO. Z100

Z1400

HEAVY-DUTY "LEVEL-TROL" ADJUSTABLE FLOOR CLEANOUT

SPECIFICATION SHEET

TAG _____

Dimensional Data (inches and [mm]) are Subject to Manufacturing Tolerances and Change Without Notice

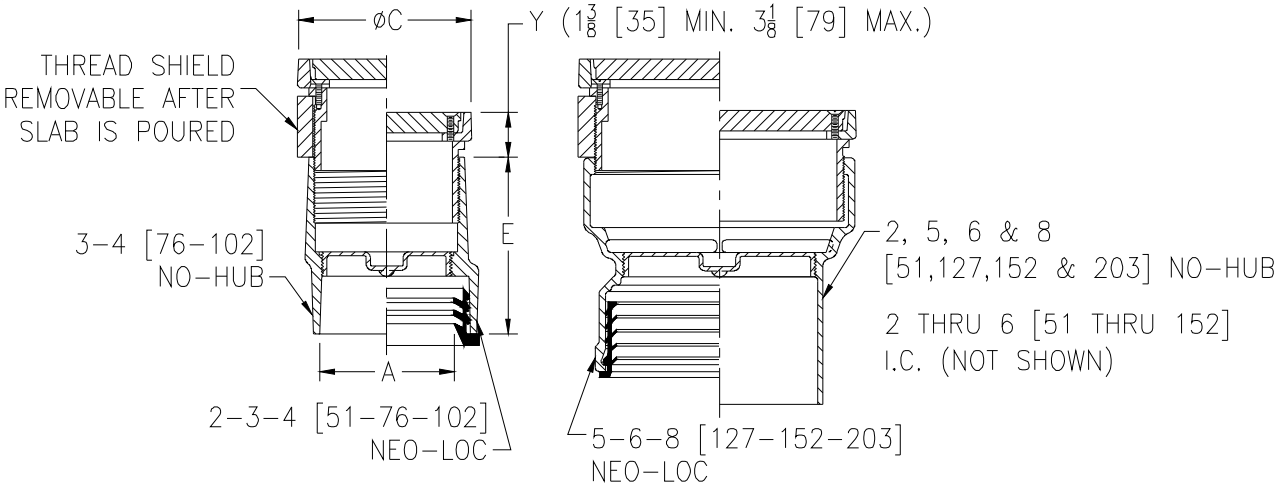

ENGINEERING SPECIFICATION: ZURN Z1400
"Level-Trol" Adjustable floor cleanout, Dura-Coated cast iron body with gas and watertight ABS tapered thread plug and round scoriated cast iron heavy-duty secured top (Specify finish Z, ZB, ZN, ZS) adjustable to finished floor.

Dimension In Inches			Approx. Wt. Lbs. [kg.]
A-Pipe Size	C	E	
Inside Caulk			
2 [51]	6-1/8 [156]	6-7/8 [175]	13.8 [6.3]
3 [76]	6-1/8 [156]	6-7/8 [175]	14 [6.4]
4 [102]	7-1/4 [184]	6-7/8 [175]	18.3 [8.3]
5 [127]	8-1/4 [210]	6-7/8 [175]	22.6 [10.3]
6 [152]	9-1/4 [235]	6-7/8 [175]	32.2 [14.6]
No-Hub			
2 [51]	4-1/8 [105]	4-5/8 [117]	7 [3]
3 [76]	4-1/8 [105]	4-3/4 [121]	7.7 [3.5]
4 [102]	5-1/8 [130]	4-3/4 [121]	10.3 [4.7]
5 [127]	7-1/4 [184]	7-1/2 [191]	17.6 [8]
6 [152]	8-1/4 [210]	4-3/4 [121]	22.2 [10.1]
8 [203]	9-1/4 [235]	7-1/2 [191]	29.9 [13.6]
Neo-Loc			
2 [51]	4-1/8 [105]	4-3/4 [121]	7.9 [3.6]
3 [76]	5-1/8 [130]	4-3/4 [121]	10.6 [4.8]
4 [102]	5-1/8 [130]	4-3/4 [121]	11.9 [5.4]
5 [127]	7-1/4 [184]	6-1/2 [165]	18.7 [8.5]
6 [152]	8-1/4 [210]	5-7/8 [149]	21.9 [9.9]
8 [203]	9-1/4 [235]	6-1/2 [165]	23.5 [10.7]

OPTIONS (Check/specify appropriate options)

PREFIXES

- _____ Z — Dura Coated Cast Iron*
- _____ ZB — D.C.C.I. w/ Polished Bronze Light-Duty Top (Deduct 1/2 [13] from 'Y' Dim.)
- _____ ZN — D.C.C.I. w/ Polished Nickel Bronze Light-Duty Top (Deduct 1/2 [13] from 'Y' Dim.)
- _____ ZS — D.C.C.I. w/ Polished Stainless Steel Heavy-Duty Top (Add 3/16 [5] to 'Y' Dim.)

SUFFIXES

- _____ -AR — Acid Resisting Epoxy Coated Finish
- _____ -BP — Bronze Plug
- _____ -CF — Carpet Flange Cover (ZB and ZN only)
- _____ -CM — Carpet Marker
- _____ -DC — Duresist Cover
- _____ -DX — Round ZB or ZN Top with Dex-o-tex Flange (2 thru 4 [51 thru 102] Sizes only)
- _____ -G — Galvanized Cast Iron
- _____ -HD — Heavy-Duty Veneer Top (Add 1/8 [3] to 'Y' Dim.) (ZB and ZN only)
- _____ -K — Anchor Flange
- _____ -KC — Anchor Flange w/ Clamping Collar
- _____ -SG — Solid Gasketed Cover
- _____ -SM — Special Marking Stamped on Top
- _____ -T — Square Top
- _____ -TC — Neo-Loc Test Cap Gasket (2-4 [51-102] NL Bottom Outlet Only)
- _____ -TX — Square Top Recessed for 1/8 [3] Tile (ZB and ZN only)
- _____ -VP — Vandal-Proof Screws
- _____ -X — Round Top Recessed for 1/8 [3] Tile (ZB or ZN only)
- _____ -Z — Round Top Recessed for 1-1/4 [32] Terrazzo (ZB or ZN only)

PIPE SIZE	(Specify size/type) OUTLET	'E' BODY HT. DIM.
2 thru 6 [51 thru 152]	_____ IC Inside Caulk	See Chart
2 thru 6-8 [51 thru 152-203]	_____ NH No-Hub	See Chart
2 thru 6-8 [51 thru 152-203]	_____ NL Neo-Loc	See Chart

*REGULARLY FURNISHED UNLESS OTHERWISE SPECIFIED

REV. O DATE: 11/03/10 C.N. NO. 120210

DWG. NO. 58757 PRODUCT NO. Z1400

ZURN INDUSTRIES, LLC. ♦ SPECIFICATION DRAINAGE OPERATION ♦ 1801 Pittsburgh Ave. ♦ Erie, PA 16514
Phone: 814\455-0921 ♦ Fax: 814\454-7929 ♦ World Wide Web: www.zurn.com
In Canada: ZURN INDUSTRIES LIMITED ♦ 3544 Nashua Drive ♦ Mississauga, Ontario L4V1L2 ♦ Phone: 905\405-8272 Fax: 905\405-1292

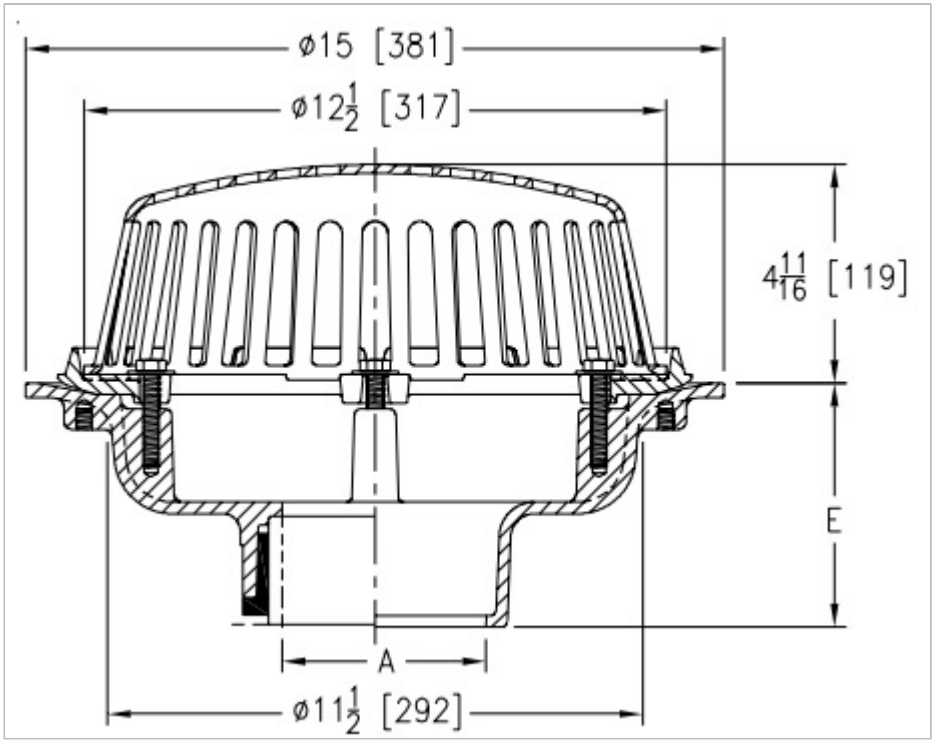

ENGINEERING SPECS: Zurn Z100 15-in. diameter low-profile roof drain. Dura-coated cast iron (DCCI) body with combination membrane flashing clamp / gravel guard, and low-silhouette poly dome.

Pipe Size (in.)	Approx. Weight (lbs.)	Dome Open Area (sq. in.)
2, 3, 4	26	103
5, 6	27	103
8	28	103

Outlet Types

Outlet Type	Available Pipe Sizes (in.)	E. Body Height Dimension (in.)
Inside Caulk (IC)	2, 3, 4, 5, 6, 8	5 1/4
Threaded (IP)	2, 3, 4, 5, 6, 8	3 3/4
No-Hub (NH)	2, 3, 4, 5, 6, 8	5 1/4
Neo-Loc (NL)	2, 3, 4	4 9/16
Neo-Loc (NL)	6	5 7/16

Dome Options

Poly-Dome* with DCCI Body (Z)
Aluminum Dome with DCCI Body (ZA)
Cast Iron Dome with DCCI Body (ZC)
Plain Bronze Dome with DCCI Body (ZRB)

**Regularly furnished unless otherwise specified*

Accessories

Angular Underdeck Clamp (AC)	6-3/4 in. High Aluminum Dome Strainer (148 sq. in. open area) (Aluminum Dome Only) (HD)
Acid Resistant Epoxy Coated (AR)	Roof Sump Receiver (R)
3/4- to 4-in. Adjustable Water Level Regulator (specify ht) (Cast Iron Dome only)	Secondary Clamp Collar (SC)
Bronze Mesh Screen Over Dome (BS)	Stainless Steel Mesh Screen Over Dome (SS)
Underdeck Clamp (C)	Neo-Loc Test Cap Gasket (2- to 4-in.) (Neo-Loc Outlet Only) (TC)
Deck Extension (DE)	Dome with Solid Top (Aluminum, Cast Iron and Plain Bronze Dome Only) (ST)
Top-Set® Deck Plate (Replaces both the Underdeck Clamp and Roof Sump Receiver) (DP)	Vandal-Proof Secured Top (VP)
Top-Set® Deck Riser (DR)	2-in. Internal Water Dam (W2)
Dex-O-Tex Flange (DX)	3-in. Internal Water Dam (W3)
Static Extension 1- to 4-in. (specify ht) (E)	4-in. Internal Water Dam (W4)
Adjustable Extension Assembly 2-1/8 thru 3-1/2 in. (EA)	Stainless Steel Perforated Gravel Guard (84)
Top-Set® Adjustable Extension Assembly (EB)	Stainless Steel Perforated Extension (85)
Flush Grate (Replaces Dome Strainer) (FG)	2-in. High External Water Dam (89)
	90° Threaded Side Outlet Body (2- to 6-in. outlets)

Galvanized Cast Iron (G)	(90)
Galvanized Cast Iron Dome (Cast Iron Dome Only) (GD)	

© 2004-2015 Hy-Tech Products, Inc.
All rights reserved. Use of this site is subject to certain terms of use which constitutes a legal agreement between you and Hy-Tech Products, Inc.

Terms of Use

11/20/2017 12:23 PM
p. 352
City of Fort Lauderdale
Bid 12072-483
CAM #18-0726
Exhibit 1 (Part C)
Page 49 of 203

APPENDIX

APPENDIX

- Survey plan
- Geotechnical report
- FINA Facilities rules
- City of Fort Lauderdale Code of Ordinance, Chapter 6, Article III Sea Turtles

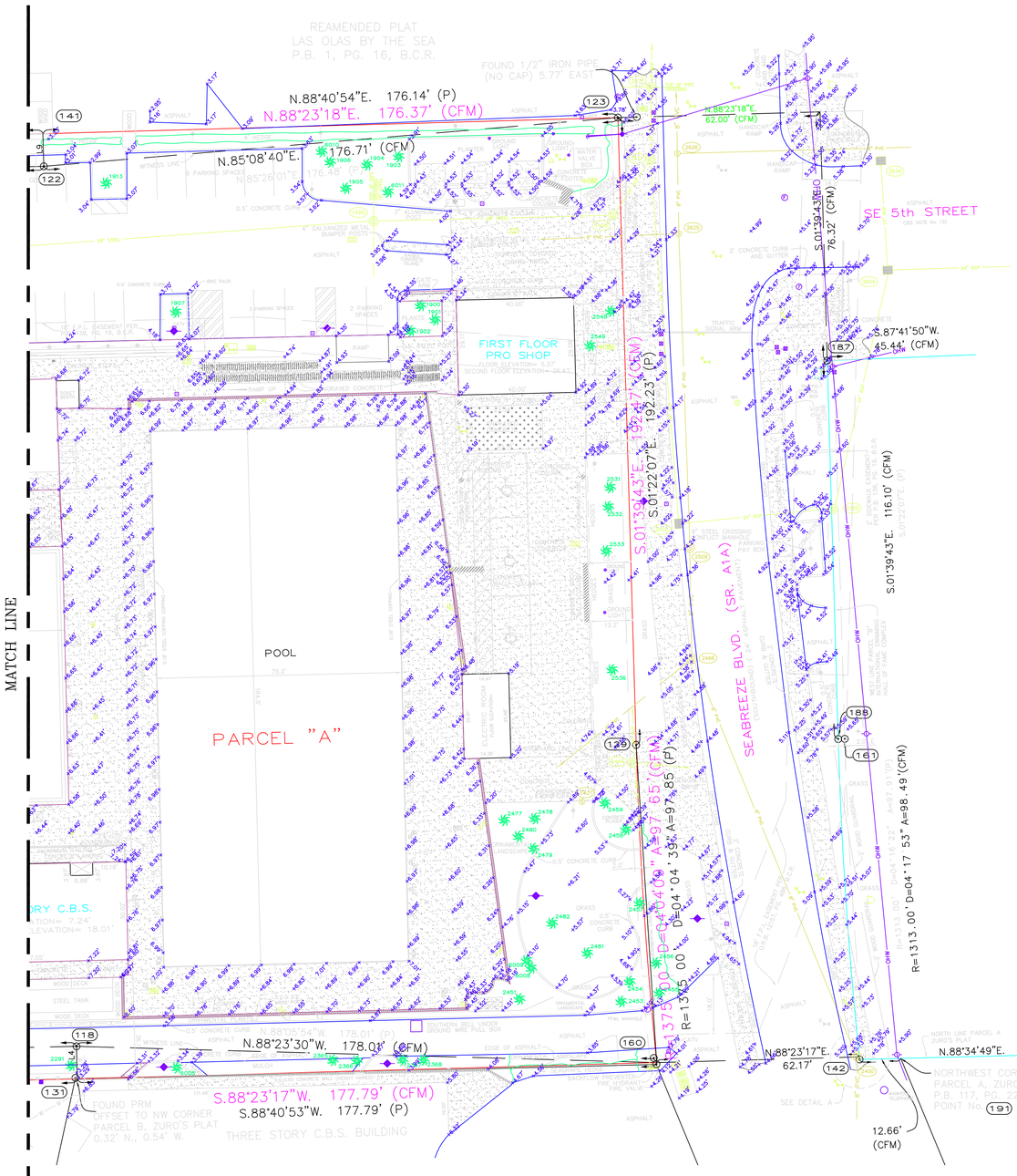

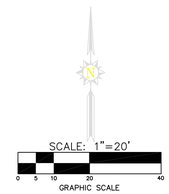

LEGEND:

OUTLET FOR TIMERS (8" X 6")
PLATFORM SLEEVE
LADDER SLEEVE
POLE SLEEVE
POLO NET SLEEVE
JUNCTION BOX (4" X4")
FLOOR DRAIN
VALVE BOX
START BLOCK
WATER METER
SUPERSWIM
PARKING METER
CONCRETE LIGHT POLE
WOOD FENCE
CHAIN-LINK FENCE
SIGN
WOODEN POWER POLE
OVERHEAD WIRES
SANITARY SEWER MANHOLE
FLORIDA POWER & LIGHT
WATER VALVE
GAS VALVE
ELECTRIC WIRE PULL BOX
TRAFFIC WIRE PULL BOX
GAS METER
DRAINAGE MANHOLE
METAL LIGHT POLE
BACKFLOW PREVENTOR (2")
ANCHOR
WATER MANHOLE
FPL MANHOLE
CLEANOUT
TRASH BIN
CATCH BASIN
CONCRETE
BRICK PAVERS
DENOTES STORM SEWER STRUCTURES
PAGE
BROWARD COUNTY RECORDS
DADE COUNTY RECORDS
OFFICIAL RECORDS BOOK
POINT OF COMMENCEMENT
POINT OF BEGINNING
IDENTIFICATION
PLAT BOOK
POLYVINYL CHLORIDE
REINFORCE CONCRETE PIPE
CORRUGATED METAL PIPE
TREE NUMBER 3086
DENOTES ABOVE GROUND ELEVATION
HANDICAP PARKING SPACE
C.B.S. WALL
LICENSED BUSINESS
CABLE TELEVISION BOX
TELEPHONE RISER
DENOTES CONTROL POINT NUMBER 160
DENOTES BREAK IN LINE SCALE
DENOTES RECORD MEASUREMENTS
DENOTES CALCULATED FIELD MEASUREMENTS
NOT AVAILABLE
AIR CONDITIONING

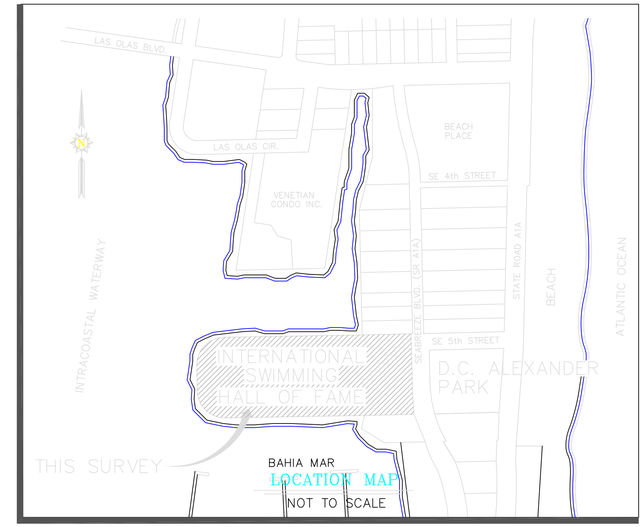

LEGAL DESCRIPTION:

PARCEL "A", INTERNATIONAL SWIMMING HALL OF FAME COMPLEX PLAT, ACCORDING TO THE PLAT THEREOF, RECORDED IN PLAT BOOK 138, PAGE 19 OF THE PUBLIC RECORDS OF BROWARD COUNTY, FLORIDA.

SAID LANDS SITUATE WITHIN THE CITY OF FORT LAUDERDALE, BROWARD COUNTY, FLORIDA CONTAINING 5.061 ACRES (220,446 SQUARE FEET) MORE OR LESS.

SURVEY NOTES:

1. THIS SURVEY REPRESENTS A BOUNDARY AND TOPOGRAPHIC SURVEY AS DEFINED IN THE MINIMUM TECHNICAL STANDARDS FOR SURVEYING AND MAPPING IN CHAPTER 5J-17 FLORIDA ADMINISTRATIVE CODE.

2. THE PROPERTY SHOWN HEREON WAS NOT ABSTRACTED FOR OWNERSHIP, RIGHTS-OF-WAY, EASEMENTS OR OTHER MATTERS OF RECORD BY STONER & ASSOCIATES, INC. AND WAS NOT THE SUBJECT OF A TITLE SEARCH.

3. UNDERGROUND FEATURES SUCH AS: ENCROACHMENTS, UTILITIES, FOUNDATIONS, PIPELINES AND CABLES WERE NOT LOCATED OR SHOWN HEREON. THIS SURVEY IS LIMITED TO ABOVEGROUND FEATURES ONLY.

4. THIS SURVEY IS "NOT VALID WITHOUT THE SIGNATURE AND THE ORIGINAL RAISED SEAL OF A FLORIDA LICENSED SURVEYOR AND MAPPER".

5. THIS MAP IS INTENDED TO BE DISPLAYED AT A SCALE OF 1"=20'

6. THE BEARINGS SHOWN HEREON ARE BASED ON N.21°40'55"E., BETWEEN D.N.R.P. COASTAL CONTROL LINE MONUMENT R-77 AND R-76.

7. THE COORDINATES SHOWN HEREON ARE BASED ON THE FLORIDA STATE PLANE COORDINATE SYSTEM, EAST ZONE, NORTH AMERICAN DATUM (N.A.D.) OF 1983, 1990 ADJUSTMENT. SCALE FACTORS AND CONVERGENCE ARE NOT SHOWN.

8. THE ELEVATIONS SHOWN HEREON ARE BASED ON NORTH AMERICAN VERTICAL DATUM OF 1988 AS ESTABLISHED FROM THE FOLLOWING DESCRIBED GOVERNMENTAL BENCH MARK: A BRASS DISC IN CONCRETE STAMPED R-78, 1975, D.N.R.P., LOCATED AT THE INTERSECTION OF SOUTH NEW RIVER DRIVE AND SOUTH ANDREWS AVENUE, IN A CONCRETE RETAINING WALL, 32.5' EAST OF A UTILITY LIGHT POLE, 25.3' NORTH OF AND LEVEL WITH THE DRIVE CENTERLINE, 3.6 ' NORTH OF THE SOUTHWEST CORNER OF A DRAW BRIDGE, AND 0.3' WEST OF THE WEST FACE OF THE ABUTMENT, ELEVATION 3.464 FEET.

9. THE PURPOSE OF THIS SURVEY IS TO ESTABLISH BOUNDARY LINES, LOCATE AND MEASURE ELEVATIONS OF ABOVEGROUND FEATURES.

10. THE SYMBOLS REFLECTED IN THE LEGEND AND ON THIS SURVEY MAY HAVE BEEN ENLARGED FOR CLARITY. THE SYMBOLS HAVE BEEN PLOTTED AT THE CENTER OF THE FIELD LOCATION AND MAY NOT REPRESENT THE ACTUAL SHAPE OF THE FEATURE IT REPRESENTS.

11. THE PROPERTY SHOWN HEREON – INTERNATIONAL SWIMMING HALL OF FAME COMPLEX (PARCEL "A") CONTAINS 5.061 ACRES (220,446 SQUARE FEET), MORE OR LESS. THE AREA OF THE PROPERTIES ARE BASED ON FIELD CALCULATED MEASUREMENTS.

12. THIS FIRM HAS ATTEMPTED TO IDENTIFY THE VARIOUS TYPES OF TREES AND LANDSCAPING LOCATED ON THIS SITE. CONTACT A QUALIFIED LANDSCAPE ARCHITECT FOR POSITIVE IDENTIFICATION. TREE DIAMETERS ARE APPROXIMATE AND WERE MEASURED BREAST HEIGHT ABOVE THE GROUND. CLEAR WOOD DISTANCE WAS MEASURED ON PALM TREES ONLY AND WAS MEASURED FROM THE BASE OF THE TREE TO THE POINT OF FOLIAGE ALONG THE TRUNK.

13. PARKING SPACE STRIPING IS SHOWN APPROXIMATE.

14. EXTERIOR BUILDING DIMENSIONS ARE AT GROUND LEVEL. BUILDING TIES ARE TO THE EXTERIOR WALLS. ARCHITECTURAL DETAILS MAY NOT BE SHOWN ON THE SURVEY.

15. THE PROPERTY SHOWN HEREON WAS NOT INSPECTED BY STONER & ASSOCIATES, INC. FOR ENVIRONMENTAL HAZARDS.

16. IRRIGATION LINES, WELLS AND SPRINKLERS HEADS ARE NOT REFLECTED ON THIS SURVEY.

17. THE SURVEYOR ATTEMPTED TO LOCATED GROUND LIGHTING. SOME GROUND LIGHTS MAY NOT BE REFLECTED HEREON BECAUSE THEY WERE OBSCURED BY VEGETATION.

18. DISTANCES, ELEVATIONS AND COORDINATES ARE SHOWN IN U.S. SURVEY FEET.

19. BEARINGS, ANGLES AND DISTANCES DENOTED AS (P) PLAT, REPRESENT MEASUREMENTS DERIVED FROM THE FOLLOWING PLATS OF RECORD: INTERNATIONAL SWIMMING HALL OF FAME COMPLEX, PLAT BOOK 138, PAGE 19; ZURO'S, PLAT, PLAT BOOK 117, PAGE 22; "BAHIA MAR", PLAT BOOK 35, PAGE 39; LAS OLAS BY THE SEA, PLAT BOOK 1, PAGE 16; ALL OF THE PUBLIC RECORDS OF BROWARD COUNTY, FLORIDA.

20. BEARINGS, ANGLES AND DISTANCES DENOTED AS (CFM) CALCULATED FIELD MEASURED, REPRESENT MEASUREMENTS DERIVED FROM MONUMENTS LOCATED FROM A FIELD TRAVERSE AND CALCULATED MEASUREMENTS BASED ON THOSE MONUMENTS.

21. THE EASEMENTS SHOWN HEREON ARE DEPICTED GRAPHICALLY AND ARE NOT DIMENSIONED.

22. THE INFORMATION DEPICTED ON THIS MAP REPRESENTS THE RESULTS OF THE SURVEY ON THE DATES INDICATED AND CAN ONLY BE CONSIDERED AS INDICATING THE GENERAL CONDITIONS EXISTING AT THE TIME OF SURVEY.

23. THE SURVEYOR HAS AS-BUILT THE STORM DRAINAGE AND SANITARY SEWER SYSTEMS LOCATED ON THIS SITE. SOME STRUCTURES WERE NOT AS-BUILT DUE TO PIPE CONFLICTS, POLLUTION RETARDANT DEVICES AND DEBRIS. BEFORE DESIGN OR CONSTRUCTION A QUALIFIED CIVIL ENGINEER SHOULD REVIEW THE DATA CONTAINED HEREON FOR COMPLETENESS AND ACCURACY.

24. DURING THE COURSE OF THE FIELD SURVEY, IT WAS DISCOVERED THAT A DISCREPANCY EXISTS BETWEEN THE INTERNATIONAL SWIMMING HALL OF FAME COMPLEX PLAT, RECORDED IN PLAT BOOK 138, PAGE 19, OF THE PUBLIC RECORDS OF BROWARD COUNTY, FLORIDA, AND ZURO'S PLAT, RECORDED IN PLAT BOOK 117, PAGE 22, OF THE PUBLIC RECORDS OF BROWARD COUNTY, FLORIDA. THE NORTH LINE OF PARCEL B OF ZURO'S PLAT HAS BOTH AN OVERLAP AND HIATUS WITH THE SOUTH LINE OF PARCEL "A" OF THE INTERNATIONAL SWIMMING HALL OF FAME COMPLEX PLAT. THIS CONDITION WAS EVIDENCED BY FIELD MONUMENTATION AND INTERVIEWS WITH SURVEYORS AT MCLAUGHLIN ENGINEERING. THE RESOLUTION OF THIS DISCREPANCY WAS NOT A PART OF THIS SURVEY.

25. PORTIONS THE PROPERTY SHOWN HEREON ARE LOCATED WITHIN FLOOD ZONE AE (ELEVATION = 6.00' NGVD29 = 4.41' NAVD88) AS SHOWN ON FEDERAL EMERGENCY MANAGEMENT AGENCY FLOOD INSURANCE RATE MAP NUMBER 12011C0219 F, COMMUNITY NUMBER 125105, CITY OF FORT LAUDERDALE, BROWARD COUNTY, FLORIDA. EFFECTIVE DATE AUGUST 18, 1992.

26. THE HORIZONTAL POSITIONAL ACCURACY OF WELL DEFINED IMPROVEMENTS ON THIS SURVEY IS ±0.05'. THE VERTICAL ACCURACY OF ELEVATIONS OF WELL DEFINED IMPROVEMENTS ON THIS SURVEY IS ±0.05'.

CERTIFICATE:

THIS SURVEY IS CERTIFIED EXCLUSIVELY TO:

RECREATIONAL DESIGN AND CONSTRUCTION
CITY OF FORT LAUDERDALE, FLORIDA.

THIS IS TO CERTIFY THAT THIS ABOVEGROUND BOUNDARY AND TOPOGRAPHIC SURVEY WAS MADE UNDER MY RESPONSIBLE CHARGE AND IS ACCURATE AND CORRECT TO THE BEST OF MY KNOWLEDGE AND BELIEF.

WALTER DE LA ROCHA
PROFESSIONAL SURVEYOR AND MAPPER NO. LS. 6081
STATE OF FLORIDA

STONER & ASSOCIATES, INC. NO. LB. 6633

LINE TABLE (WITNESS LINE)

LINE	BEARING	DISTANCE
L4	N.01°16'43"W.	10.00'
L5	N.01°16'43"W.	10.00'
L6	S.88°09'18"W.	10.00'
L7	N.88°49'18"E.	10.00'
L8	N.01°15'58"W.	10.00'
L9	N.01°36'42"W.	10.00'

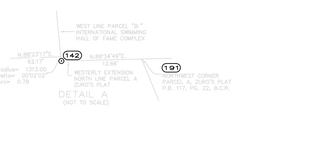

SHEET INDEX

SHEET 1 – BOUNDARY AND TOPOGRAPHIC SURVEY, LEGAL DESCRIPTION, SURVEY NOTES CERTIFICATION, LEGEND, LOCATION MAP
SHEET 2 – BOUNDARY AND TOPOGRAPHIC SURVEY
SHEET 3 – CONTROL POINTS COORDINATE TABLE, TREE TABLE, STORM DRAINAGE AS BUILTS SANITARY SEWER TABLE.

SURVEYOR'S REFERENCES:

1. PLAT OF INTERNATIONAL SWIMMING HALL OF FAME, PLAT BOOK 138, PAGE 19, BROWARD COUNTY RECORDS.

2. STONER & ASSOCIATES, INC. PROJECT # 97-5649, SWIMMING HALL OF FAME, LAST REVISED 10/01. CITY OF FORT LAUDERDALE PROJECT # P 15330-15180

PREPARED BY:

TEL (954) 585-0997
FAX (954) 585-3927
STONER & ASSOCIATES, Inc.
SURVEYORS - MAPPERS
Florida Licensed Survey and Mapping Business No. 6633
4341 S.W. 62nd AVENUE TOWN OF DAVIE, FLORIDA 33314

DRAWN BY: WDLR	DATE: 12/18/13
DESIGNED BY:	SCALE: 1"=20'
CHECKED BY: JDS	FIELD BOOK: 312/7-16 + MARKUPS

CITY OF FORT LAUDERDALE
PUBLIC WORKS DEPARTMENT
ENGINEERING & ARCHITECTURE
100 North Andrews Avenue, Fort Lauderdale, Florida 33301

REVISIONS

NO.	DATE	BY	CHK'D	DESCRIPTION

PROJECT # P15330-15180
INTERNATIONAL SWIMMING HALL OF FAME
BOUNDARY AND TOPOGRAPHIC SURVEY
1 HALL OF FAME DRIVE
FORT LAUDERDALE, BROWARD COUNTY, FL

PRELIMINARY

SHEET NO.	OF
X-1	03
TOTAL:	03
CAD FILE: 13-7990	
DRAWING FILE NO. 4-000-00	

LINE TABLE (WITNESS LINE)

LINE	BEARING	DISTANCE
L4	N.01°16'43"W.	10.00'
L5	N.01°16'43"W.	10.00'
L6	S.88°49'18"W.	10.00'
L7	N.88°49'18"E.	10.00'
L8	N.01°55'59"W.	10.00'
L9	N.01°36'42"W.	10.00'

SHEET INDEX

SHEET 1 – BOUNDARY AND TOPOGRAPHIC SURVEY
LEGAL DESCRIPTION, SURVEY NOTES
CERTIFICATION, LEGEND, LOCATION MAP
SHEET 2 – BOUNDARY AND TOPOGRAPHIC SURVEY
SHEET 3 – CONTROL POINTS COORDINATE TABLE
TREE TABLE, STORM DRAINAGE AS BUILTS
SANITARY SEWER TABLE.

SCALE: 1"=20'
GRAPHIC SCALE

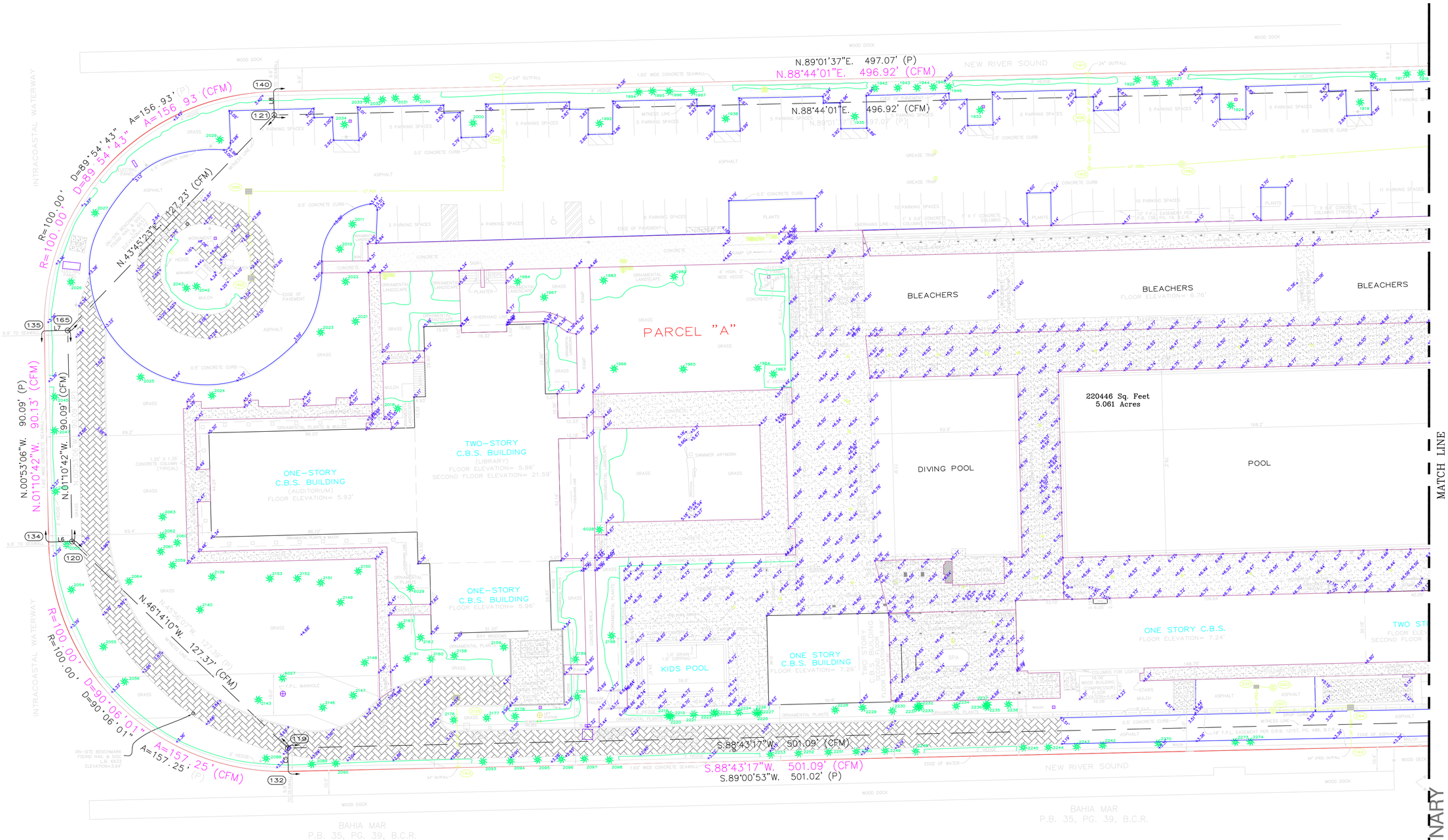

PREPARED BY:

STONER & ASSOCIATES, Inc.
SURVEYORS - MAPPERS
Florida Licensed Survey and Mapping Business No. 5633
4341 S.W. 62nd AVENUE TOWN OF DAVIE, FLORIDA 33314
TEL (954) 585-0997
FAX (954) 585-3927

PRELIMINARY

DRAWN BY: WDLR
DATE: 12/18/13
DESIGNED BY:
SCALE: 1"=20'
CHECKED BY: JDS
FIELD BOOK: 312/7-16 + MARKUPS

CITY OF FORT LAUDERDALE
PUBLIC WORKS DEPARTMENT
ENGINEERING & ARCHITECTURE
100 North Andrews Avenue, Fort Lauderdale, Florida 33301

REVISIONS

NO.	DATE	BY	CHK'D	DESCRIPTION

PROJECT # P15330-15180
INTERNATIONAL SWIMMING HALL OF FAME
BOUNDARY AND TOPOGRAPHIC SURVEY
1 HALL OF FAME DRIVE
FORT LAUDERDALE, BROWARD COUNTY, FL

SHEET NO. X-2 OF 03
TOTAL: 03
CAD FILE: 13-7990
DRAWING FILE NO. 4-000-00

11/20/2017 12:23 PM

tierra SOUTH FLORIDA
GEOTECHNICAL ENGINEERING / MATERIAL TESTING / INSPECTION SERVICES

March 20, 2017

Synalovski Romanik Saye
1800 Eller Drive, Suite 500
Fort Lauderdale, Florida 33316

Attn: Ms. Merrill Romanik, AIA, LEEP AP

Re: Geotechnical Engineering Study Report
Fort Lauderdale Aquatic Center
Fort Lauderdale, Florida
TSF File No. 7111-17-084

Dear Merrill:

TIERRA SOUTH FLORIDA, Inc. (TSF) is pleased to transmit our updated Geotechnical Engineering Study Report for the above referenced project. This report includes the results of field testing, geotechnical recommendations for foundation, as well as general site development.

We appreciate the opportunity to perform this Geotechnical Study and look forward to continued participation during the construction phase of this project. If you have any questions pertaining to this report, or if we may be of further service, please contact our office.

Respectfully submitted,

TIERRA SOUTH FLORIDA, INC.

3/20/17
Ramakumar V. Vedula, P.E.
Principal Engineer
FL Registration No. 54873

3/20/17
Wenbin Zhao, Ph.D., P.E.
Project Engineer

KV/WZ:

J:\Tierra Documents\Projects\TSF 2017\7111-17-084. Florida Aquatic Center (Synalovski Romanik)\7111-17-084. Fort Lauderdale Aquatic Center_geo rpt.docx

2765 VISTA PARKWAY, SUITE 10 · WEST PALM BEACH, FLORIDA 33411
(561) 687-8539 · FAX (561) 687-8570
State of Florida Professional Engineers License #28073

Page No.

TABLE OF CONTENTS

1.0 EXECUTIVE SUMMARY 1

2.0 PROJECT INFORMATION 2
2.1 Project Authorization 2
2.2 Project Description and Background 2
2.3 Purpose and Scope of Services 2

3.0 SITE AND SUBSURFACE CONDITIONS 4
3.1 Site Location and Description 4
3.2 Subsurface Conditions 4
3.3 Groundwater Information 4
3.4 Borehole Permeability Test Result and Pavement Cores 5

4.0 EVALUATION AND RECOMMENDATIONS 6
4.1 Geotechnical Discussion 6
4.2 Foundation Recommendations 6
4.3 Ground Floor Slab Recommendations 7
4.4 Below Grade Walls 7
4.5 Utilities 7
4.6 Construction Excavation and Dewatering 7

5.0 REPORT LIMITATIONS 8

APPENDIX - PAVEMENT CORE DATA
BHP TEST RESULTS
BORING LOCATION PLAN – SHEET 1
SOIL PROFILES – SHEET 2

1.0 EXECUTIVE SUMMARY

An exploration and evaluation of the subsurface conditions was completed for the proposed International Swimming Hall of Fame development to be constructed at 501 Seabreeze Boulevard in Fort Lauderdale, Florida and a Geotechnical Engineering Study report was provided dated September 27, 2013. This report is being updated for the new Fort Lauderdale Aquatic Center design.

Based on visual classifications, the subsoils typically consisted of about 30 ft of sandy soils occasionally mixed with limestone and silt followed by about 10 to 25 feet of sandy limestone which is underlain by a mix of cemented sand and sand to the terminated depth of the borings.

Groundwater depth in the borings generally varied from about 4 to 7 feet below existing grade.

It is our understanding that due to loading conditions, piles are being considered to support the proposed structure. The proposed structure could be supported on Auger Cast-in-Place (ACIP) piles installed into the limestone and cemented sand.

We expect a properly reinforced 12-inch-diameter and 14-inch-diameter ACIP pile installed into the limestone and cemented sand materials to achieve a compressive capacity on the order of 25 tons, and 60 tons, respectively. Geotechnical details related to site development, foundation design and construction considerations are included in subsequent sections of this report.

The owner/designer should not rely solely on this Executive Summary and must read and evaluate the entire contents of this report prior to utilizing our engineering recommendations in preparation of design/construction documents.

2.0 PROJECT INFORMATION

2.1 Project Authorization

TSF has completed a geotechnical exploration for the proposed International Swimming Hall of Fame development to be constructed at 501 Seabreeze Boulevard in Fort Lauderdale, Florida and a Geotechnical Engineering Study report was provided dated September 27, 2013. This report is being updated for the new Fort Lauderdale Aquatic Center design. Our services were authorized by Syalovski Romanil Saye Architects.

2.2 Project Description and Background

Our understanding of the project is based on information provided by Syalovski Romanil Saye. Based on information provided to us, the proposed development will consist of the following:

1. Remove existing 50M Main Competition Pool and provide new expanded fully FINA compliant standard pool with (2) moveable stainless bulkheads.
2. Remove existing Diving Pool and underground observation room and provide new fully FINA compliant Diving Pool with dive tower including five (5) platform levels (1M, 3M, 5M, 7.5M, 10M), and 1M and 3M springboard. Provide metal bleacher for +/- 550 spectator capacity on the west side of the Dive Pool.
3. Remove existing Spa for divers and provide new covered spa.
4. Repair existing 50M training pool with new surfacing and gutters.
5. Expand existing Instructional Pool.
6. Raise pool deck and cut existing piles to allow for increased pool depths needed for competition level-use.
7. Remove existing grandstand building and bleachers on north side of facility and provide new grandstand with spectator restrooms, concessions, ticket office, and metal bleachers for +/- 1500 spectator capacity.

The Diving pool will be about 20 feet deep and the Teaching pool will be about 4 feet deep.

The site is currently occupied by two swimming pools, 1 to 2 story structures, and associated driveway and parking lot. Loading information has not been provided at this time.

The geotechnical recommendations presented in this report are based on the available project information, and the subsurface materials described in this report. If any of the noted information is incorrect, please inform TSF in writing so that we may amend the recommendations presented in this report if appropriate and if desired by the client. TSF will not be responsible for the implementation of its recommendations when it is not notified of changes in the project.

2.3 Purpose and Scope of Services

The purpose of this study was to explore the subsurface conditions at the site to enable an evaluation of acceptable foundation systems for the proposed construction. This report briefly outlines the testing procedures, describes the site and subsurface conditions, and presents geotechnical recommendations for foundation design and general site development.

Our field work consisted of drilling a total of seven (7) Standard Penetration Test (SPT) borings to a depth 40 to 80 feet below existing grade, two (2) pavement cores, and four (4) Borehole Permeability (BHP) tests. This report briefly outlines the testing procedures, presents available project information, describes the site and subsurface conditions, and presents geotechnical recommendations regarding the following:

- Foundation soil preparation requirements.
- Foundation recommendations.
- Comments regarding factors that may impact construction and performance of the proposed construction.

The scope of services did not include an environmental assessment for determining the presence or absence of wetlands or hazardous or toxic materials in the soil, bedrock, surface water, groundwater, or air on or below, or around this site. Any statements in this report or on the boring logs regarding odors, colors, and unusual or suspicious items or conditions are strictly for information purposes only.

3.0 SITE AND SUBSURFACE CONDITIONS

3.1 Site Location and Description

The project site is located at 501 Seabreeze Boulevard in Fort Lauderdale, Florida. At the time of this exploration, the site was occupied by two swimming pools, 1 to 2 story structures, and associated driveway and parking lot.

3.2 Subsurface Conditions

Subsurface conditions at the site were explored with engineering borings located as shown on the Boring Location Plan, Sheet 1. The study included the drilling of seven (7) Standard Penetration Test (SPT) borings to a depth 40 to 80 feet below existing grade. The borings were located in the field by TSF personnel.

The borings were drilled using a truck mounted Diedrich D-55 drill rig, and mud rotary and casing procedures. Samples of the in-place materials were recovered at frequent intervals using a standard split spoon driven with a 140-pound hammer freely falling 30 inches (the SPT sampling after ASTM D 1586). The samples of the in-place soils were returned to our laboratory for classification by a geotechnical engineer. The samples were classified in general accordance with the Unified Soil Classification System (ASTM D 2488).

Based on visual classifications, the subsoils typically consisted of about 30 ft of sandy soils occasionally mixed with limestone and silt followed by about 10 to 25 feet of sandy limestone which is underlain by a mix of cemented sand and sand to the terminated depth of the borings. One boring (B-1) indicated the presence of about 6 inches of organics at a depth of about 20 feet. The soil profiles are presented on Sheet 2 in the Appendix.

The above subsurface description is of a generalized nature intended to highlight the major subsurface stratification features and material characteristics. The boring logs should be reviewed for specific information at individual boring locations. These records include soil descriptions, stratifications, and penetration resistances. The stratifications shown on the boring logs represent the conditions only at the actual boring locations. Variations may occur and should be expected between boring locations. The stratifications represent the approximate boundary between subsurface materials, and the actual transition may be gradual. Water level information obtained during field operations is also shown on the boring logs. The samples that were not altered by laboratory testing will be retained for 30 days from the date of this report and then will be discarded.

3.3 Groundwater Information

Groundwater levels were measured in the borings when first encountered during drilling. The depths to the free water surface at the time of drilling generally ranged from about 4 to 7 feet below the existing ground surface. The groundwater is expected to fluctuate with seasonal and tidal changes. We expect the groundwater to, typically, fluctuate within about 2 ft from where it was encountered during the drilling operation. At this time, information is not available to assess if groundwater will impact the proposed foundation construction.

In general, the seasonal high groundwater level is not intended to define a limit or ensure that future seasonal fluctuations in groundwater levels will not exceed the estimated levels. Post-development groundwater levels could exceed the normal seasonal high groundwater level estimate as a result of a series of rainfall events, changed conditions at the site that alter surface water drainage characteristics, or variations in the duration, intensity, or total volume of rainfall. We recommend that the Contractor determine the actual groundwater levels at the time of the construction to determine groundwater impact on his or her construction procedures.

3.4 Borehole Permeability Test Result and Pavement Cores

Twelve (12) BHP test was performed using the usual open-hole, constant head methodology. The tests were advanced to a depth of about 10 feet to 20 feet below grade with a 6-inch diameter solid stem auger so that soil samples could be retrieved for visual classification by an engineer. The boring was completed as open well with gravel pack (6-20 silica sand). The well screen slot widths were 0.020 inches. Water from the drill rig tank was then pumped into the open well, and the amount of water required maintaining constant head was recorded. The results of the Borehole Permeability tests are attached in the appendix.

Two (2) pavement cores were taken on the north side at approximate locations shown on Sheet 1. Pavement core data is attached in the appendix.

4.0 EVALUATION AND RECOMMENDATIONS

4.1 Geotechnical Discussion

The geotechnical study completed for the proposed development confirms that the site is suitable for the planned construction when viewed from a soil mechanics and foundation engineering perspective. It is our understanding that due to loading conditions, piles are being considered to support the proposed structure. The proposed structure could be supported on Auger Cast-in-Place (ACIP) piles installed into the limestone and cemented sand.

We expect a properly reinforced 12-inch-diameter and 14-inch-diameter ACIP pile installed into the limestone and cemented sand materials to achieve a compressive capacity on the order of 25 tons, and 60 tons, respectively.

The existing seawall should be in good working condition and should be inspected for damage or erosion. The condition of the seawall and impact on the proposed structure should be evaluated by others, and was not a part of this study.

4.2 Foundation Recommendations

Augercast Pile Foundation Recommendations

As mentioned above, the proposed structures could be supported on Augercast-in-place (ACIP) piles installed into the limestone and cemented sand. A properly reinforced 12-inch-diameter ACIP pile installed 8 feet into the limestone and cemented sand materials is expected to achieve a compressive capacity on the order of 25 tons. A properly reinforced 14-inch-diameter ACIP pile installed 15 feet into the limestone and cemented sand materials is expected to achieve a compressive capacity on the order of 60 tons. The ACIP pile design criteria presented below for 14-inch-diameter pile must be confirmed with a load test program including test pile and load tests:

Augercast Pile Design Parameter	14-inch-diameter Pile	12-inch-diameter Pile
Compressive Capacity	60 tons	25 tons
Tension Capacity	30 tons	15 tons
Minimum Pile Spacing	3.5 ft on-center	3 ft on-center
Grout Compressive Strength	3500 lbs/in^2	3000 lbs/in^2
Pile Embedment	Minimum 15 ft into the limestone and cemented sand	Minimum 8 ft into the limestone and cemented sand
Estimated Typical Pile Length	45 ft below existing grade(1)	38 ft below existing grade(1)
Steel Reinforcement	five #5 bars full length with #3 ties(2)	four #5 bars full length with #3 ties(2)

Note: (1) The pile embedment and length is based on the assumption that the bottom of pile cap will be about 6 to 15 feet below existing ground surface.
(2) The steel reinforcing presented above is the recommended minimum reinforcing only. Adequate pile reinforcing must be designed by the Structural Engineer to resist all axial, bending, tensile, and shear stresses.

4.3 Ground Floor Slab Recommendations

The ground floor slab and pools should be designed as a structural tie-down slab to resist hydrostatic uplift forces anticipated under a 100 year storm event. Alternatively, the ground floor slab can be designed as a slab-on-grade bearing on compacted fill which will be allowed to flood during a storm event. The slabs should be adequately reinforced to carry the loads that are to be applied.

4.4 Below Grade Walls

Below grade walls can be supported on footings. The below grade walls should be designed to resist an equivalent fluid lateral earth pressure of 60 lb/ft^3. The aforementioned earth pressure does not include hydrostatic pressures and assumes a drainage system behind the wall to relieve hydrostatic pressure; however, the below grade wall adjacent to water or force mains/existing sidewalks/streets should be checked for hydrostatic pressure for potential water main/force main break. Below grade walls should be water-proofed (with materials such as Preprufe® 160R, Procor or Bithuthene manufactured by Grace Construction Products or pre-approved equivalent).

4.5 Utilities

All utilities should be installed per the requirements of the Civil Engineering drawings and specifications. When backfilling over utility lines, the fill should be placed in lifts and compacted to at least 95% of the material's maximum dry density as determined by the Modified Proctor Compaction Test (ASTM D 1557). The loose lift thickness is expected to vary between 6 inches and 12 inches depending on the compaction equipment used by the contractor.

4.6 Construction Excavation and Dewatering

The Diving pool will be about 20 feet deep; therefore, we expect 15 to 17 feet excavations for the Diving pool. Above normal dewatering efforts should be expected to dewater the deep excavations for the Diving pool. Well points or sock drains will be required along with cut-off walls to satisfactorily dewater deep excavations. Alternatively, tremie seal cofferdam could be a viable option for dewatering the deep excavations.

If the footing excavations extend below about 4 feet from ground surface, dewatering should be expected. Open sump pumps will be required to satisfactorily dewater shallow excavations. Well points or sock drains will be required to satisfactorily dewater slightly deeper excavations. Prior to the onset of excavation and dewatering, pending environmental issues, if any, should be cleared by the governing agency. The dewatering requirements should be revisited after the design is finalized and the footing bottom elevations are established.

We recommend that excavations be cut on slopes of 2H: 1V or flatter. Where restrictions will not permit slopes to be laid back as recommended above, the excavation should be shored in accordance with OSHA requirements. During construction, excavated materials should not be stockpiled at the top of the slope within a horizontal distance equal to the excavation depth.

5.0 REPORT LIMITATIONS

The recommendations submitted are based on the available subsurface information obtained by TSF for the proposed project. If there are any revisions to the plans for this project or if deviations from the subsurface conditions noted in this report are encountered during construction, TSF should be notified immediately to determine if changes in the foundation recommendations are required. If TSF is not retained to perform these functions, TSF will not be responsible for the impact of those conditions of the project.

The condition of the seawall and impact on the proposed structure should be evaluated by others, and was not a part of this study.

The geotechnical engineer warrants that the findings, recommendations, specifications, or professional advice contained herein have been made in accordance with generally accepted professional geotechnical engineering practices in the local area. No other warranties are implied or expressed.

After the plans and specifications are more complete, the geotechnical engineer should be retained and provided the opportunity to review the final design plans and specifications to check that our engineering recommendations have been properly incorporated into the design documents.

This report has been prepared for the exclusive use of Synalovski Romanik Saye for the specific application to the proposed Fort Lauderdale Aquatic Center development to be constructed at 501 Seabreeze Boulevard in Fort Lauderdale, Florida.

APPENDIX

Pavement Core Data
BHP Test Results
Boring Location Plan – Sheet 1
Soil Profiles – Sheet 2

PAVEMENT CORING DATA SHEET

Page No.: 1

Project No.: 7111-13-233

Date: 08/23/2013

Name: International Swimming Hall of Fame

Cored By: Manuel Rabelo

Core No.	Station	Location	Pavement Layer (in)				Total Core Length (in)	Base		Subgrade		Comments
			Top									
			FC-3	S-1	S-1	S-1		Type	Thickness (in)	Type	Thickness (in)	
C-1		Northeast					1½	LR	8"	Sand	>12"	
C-2		Northwest					1¼	LR	6"	Sand	>12"	

Remarks: LR = Limerock

Pavement Conditions:

G = Good
F = Fair
P = Poor
B = Bad

tierra SOUTH FLORIDA
GEOTECHNICAL ENGINEERING / MATERIAL TESTING / INSPECTION SERVICES

USUAL OPEN - HOLE TEST EVALUATION
SOUTH FLORIDA WATER MANAGEMENT METHOD

Client:	RDC, Inc	Test No.:	BHP-1	Date:	08/23/13
Project:	International Swimming Hall of Fame	Well Depth:	10.0 Feet	Analyst:	JO
Job No.:	7111-13-233	Location:	Fort Lauderdale, Florida		

Elapsed Time (min)		Flow Rate (gpm)
0	0.00	0.00
1	2.60	2.60
2	5.20	2.60
3	7.60	2.40
4	10.00	2.40
5	12.30	2.30
6	14.70	2.40
7	17.10	2.40
8	19.50	2.40
9	21.80	2.30
10	24.20	2.40
Constant Flow Rate (gpm)		2.42

Equation for K Value:

$$\frac{4Q}{\pi * d(2H_2^2 + 4H_2D_s + H_2d)}$$

k = 1.13E-04 CF/S/Ft^2 - Ft Head

H_2 = 7.00 Ft Hydraulic Head

Soil profile:

0-0.3' Topsoil

0.3'-10' Gray Sand with trace of shell (SP)

Where:

Hydraulic Conductivity

K= 1.13E-04 CF/S/Ft^2 - Ft Head

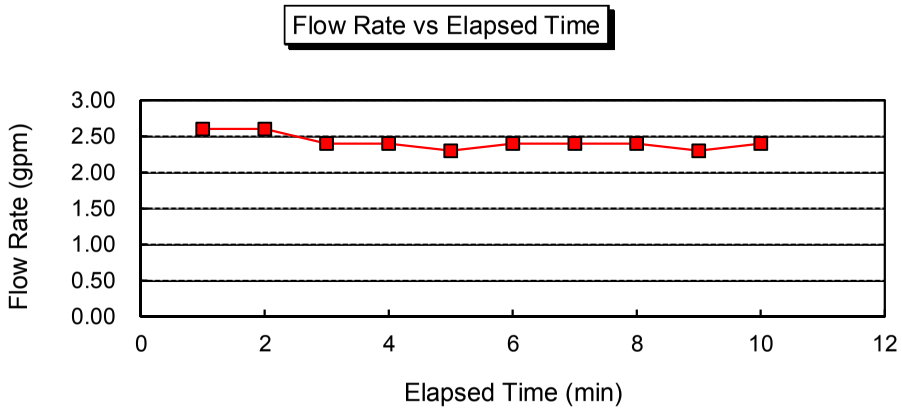

tierra SOUTH FLORIDA
GEOTECHNICAL ENGINEERING / MATERIAL TESTING / INSPECTION SERVICES

USUAL OPEN - HOLE TEST EVALUATION
SOUTH FLORIDA WATER MANAGEMENT METHOD

Client:	RDC, Inc	Test No.:	BHP-2	Date:	08/23/13
Project:	International Swimming Hall of Fame	Well Depth:	10.0 Feet	Analyst:	JO
Job No.:	7111-13-233	Location:	Fort Lauderdale, Florida		

Elapsed Time (min)		Flow Rate (gpm)
0	0.00	0.00
1	2.00	2.00
2	4.00	2.00
3	5.90	1.90
4	7.60	1.70
5	9.30	1.70
6	11.00	1.70
7	12.70	1.70
8	14.40	1.70
9	16.20	1.80
10	18.00	1.80
Constant Flow Rate (gpm)		1.80

Equation for K Value:

$$\frac{4Q}{\pi * d(2H_2^2 + 4H_2D_s + H_2d)}$$

k = 1.02E-04 CF/S/Ft^2 - Ft Head

H_2 = 5.00 Ft Hydraulic Head

Where:

Hydraulic Conductivity

K= 1.02E-04 CF/S/Ft^2 - Ft Head

Soil profile:

0-0.8' Asphalt and limerock base

0.8'-10' Sand (SP) with shell fragments

Flow Rate vs Elapsed Time

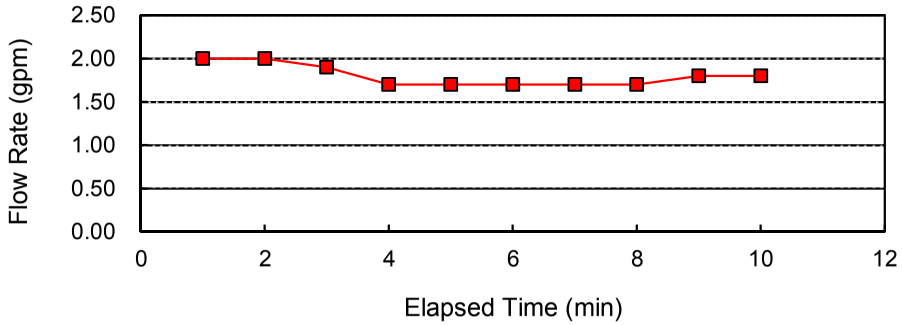

tierra SOUTH FLORIDA
GEOTECHNICAL ENGINEERING / MATERIAL TESTING / INSPECTION SERVICES

USUAL OPEN - HOLE TEST EVALUATION
SOUTH FLORIDA WATER MANAGEMENT METHOD

Client:	RDC, Inc	Test No.:	BHP-3	Date:	08/23/13
Project:	International Swimming Hall of Fame	Well Depth:	10.0 Feet	Analyst:	JO
Job No.:	7111-13-233	Location:	Fort Lauderdale, Florida		

Elapsed Time (min)		Flow Rate (gpm)
0	0.00	0.00
1	2.20	2.20
2	4.30	2.10
3	6.40	2.10
4	8.40	2.00
5	10.50	2.10
6	12.40	1.90
7	14.30	1.90
8	16.30	2.00
9	18.20	1.90
10	20.20	2.00
Constant Flow Rate (gpm)		2.02

Equation for K Value:

$$\frac{4Q}{\pi * d(2H_2^2 + 4H_2D_s + H_2d)}$$

k = 1.34E-04 CF/S/Ft^2 - Ft Head

H_2 = 4.00 Ft Hydraulic Head

Soil profile:

0-0.5' Asphalt and Limerock base

0.5'-10' Gray sand (SP) with shell fragments

Where:

Hydraulic Conductivity

K= 1.34E-04 CF/S/Ft^2 - Ft Head

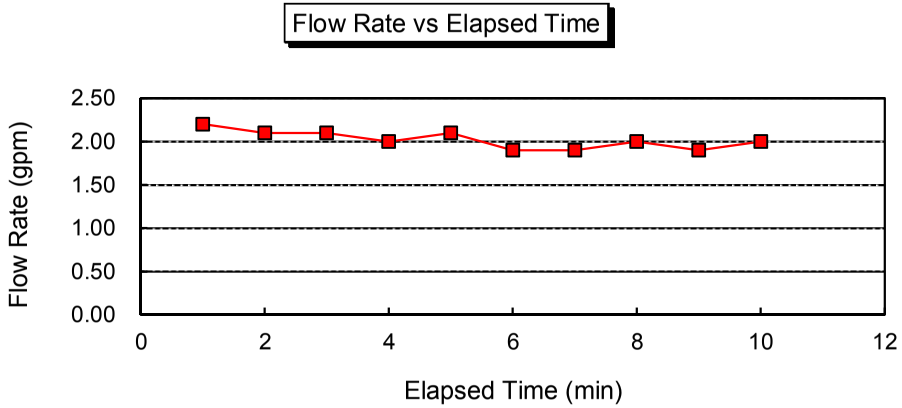

tierra SOUTH FLORIDA
GEOTECHNICAL ENGINEERING / MATERIAL TESTING / INSPECTION SERVICES

USUAL OPEN - HOLE TEST EVALUATION
SOUTH FLORIDA WATER MANAGEMENT METHOD

Client:	RDC, Inc	Test No.:	BHP-4	Date:	08/23/13
Project:	International Swimming Hall of Fame	Well Depth:	10.0 Feet	Analyst:	JO
Job No.:	7111-13-233	Location:	Fort Lauderdale, Florida		

Elapsed Time (min)		Flow Rate (gpm)
0	0.00	0.00
1	1.60	1.60
2	3.20	1.60
3	4.60	1.40
4	6.40	1.80
5	7.80	1.40
6	9.30	1.50
7	10.60	1.30
8	11.90	1.30
9	13.20	1.30
10	14.50	1.30
Constant Flow Rate (gpm)		1.45

Equation for K Value:

$$\frac{4Q}{\pi * d(2H_2^2 + 4H_2D_s + H_2d)}$$

k = 8.22E-05 CF/S/Ft^2 - Ft Head

H_2 = 5.00 Ft Hydraulic Head

Soil profile:
0-0.3' Topsoil
0.3'-3' Gray sand with shell fragments (SP)
3'-5' Gray silty Sand (SM)
5'-10' Gray Sand with trace of shell (SP)

Where:

Hydraulic Conductivity

K= 8.22E-05 CF/S/Ft^2 - Ft Head

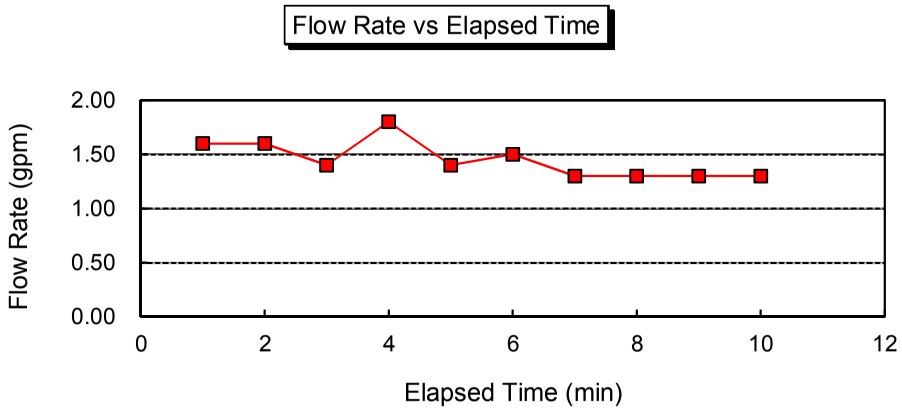

tierra SOUTH FLORIDA
GEOTECHNICAL ENGINEERING / MATERIAL TESTING / INSPECTION SERVICES

USUAL OPEN - HOLE TEST EVALUATION
SOUTH FLORIDA WATER MANAGEMENT METHOD

Client:	RDC, Inc	Test No.:	BHP-1A	Date:	11/15/13
Project:	International Swimming Hall of Fame	Well Depth:	15.0 Feet	Analyst:	Wen
Job No.:	7111-13-233	Location:	Fort Lauderdale, Florida		

Elapsed Time (min)		Flow Rate (gpm)
0	0.00	0.00
1	2.50	2.50
2	5.00	2.50
3	7.50	2.50
4	10.00	2.50
5	12.50	2.50
6	15.00	2.50
7	17.50	2.50
8	20.00	2.50
9	22.50	2.50
10	25.00	2.50
Constant Flow Rate (gpm)		2.50

Equation for K Value:

$$\frac{4Q}{\pi * d(2H_2^2 + 4H_2D_s + H_2d)}$$

k = 1.51E-04 CF/S/Ft^2 - Ft Head

H_2 = 6.30 Ft Hydraulic Head

Soil profile:

0-0.3' Topsoil

0.3'-10' Gray Sand with trace of shell (SP)

10'-15' Brown Shelly Sand (SP)

Where:

Hydraulic Conductivity

K= 1.51E-04 CF/S/Ft^2 - Ft Head

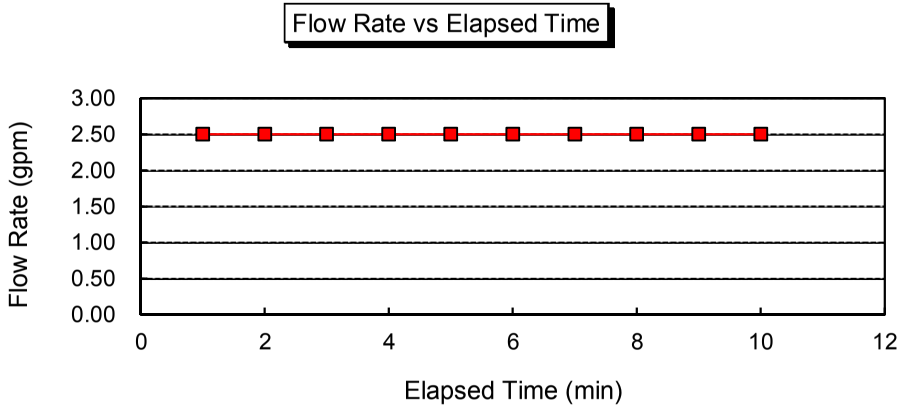

tierra SOUTH FLORIDA
GEOTECHNICAL ENGINEERING / MATERIAL TESTING / INSPECTION SERVICES

USUAL OPEN - HOLE TEST EVALUATION
SOUTH FLORIDA WATER MANAGEMENT METHOD

Client:	RDC, Inc	Test No.:	BHP-1B	Date:	11/15/13
Project:	International Swimming Hall of Fame	Well Depth:	20.0 Feet	Analyst:	Wen
Job No.:	7111-13-233	Location:	Fort Lauderdale, Florida		

Elapsed Time (min)		Flow Rate (gpm)
0	0.00	0.00
1	2.50	2.50
2	5.00	2.50
3	7.50	2.50
4	10.00	2.50
5	12.50	2.50
6	15.00	2.50
7	17.50	2.50
8	20.00	2.50
9	22.50	2.50
10	25.00	2.50
Constant Flow Rate (gpm)		2.50

Equation for K Value:

$$\frac{4Q}{\pi * d(2H_2^2 + 4H_2D_s + H_2d)}$$

k = 1.04E-04 CF/S/Ft^2 - Ft Head

H_2 = 6.30 Ft Hydraulic Head

Soil profile:

0-0.3' Topsoil

0.3'-10' Gray Sand with trace of shell (SP)

10'-20' Brown Shelly Sand (SP)

Where:

Hydraulic Conductivity

K= 1.04E-04 CF/S/Ft^2 - Ft Head

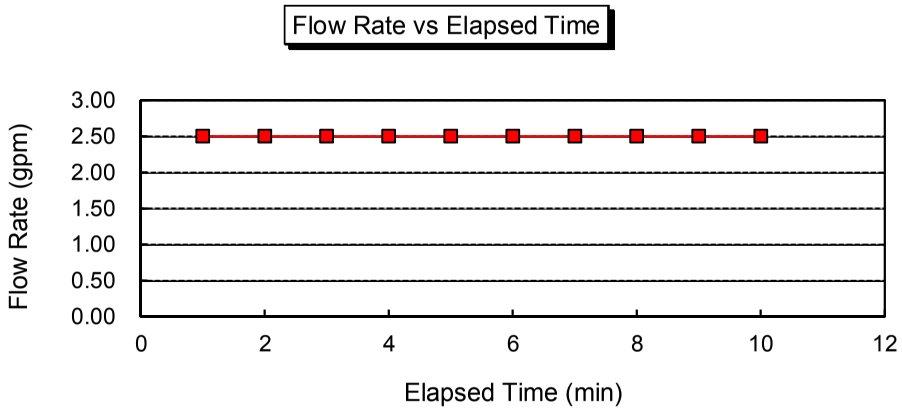

tierra SOUTH FLORIDA
GEOTECHNICAL ENGINEERING / MATERIAL TESTING / INSPECTION SERVICES

USUAL OPEN - HOLE TEST EVALUATION
SOUTH FLORIDA WATER MANAGEMENT METHOD

Client:	RDC, Inc	Test No.:	BHP-2A	Date:	11/15/13
Project:	International Swimming Hall of Fame	Well Depth:	15.0 Feet	Analyst:	Wen
Job No.:	7111-13-233	Location:	Fort Lauderdale, Florida		

Elapsed Time (min)		Flow Rate (gpm)
0	0.00	0.00
1	3.00	3.00
2	6.00	3.00
3	9.00	3.00
4	12.00	3.00
5	15.00	3.00
6	18.00	3.00
7	21.00	3.00
8	24.00	3.00
9	27.00	3.00
10	30.00	3.00
Constant Flow Rate (gpm)		3.00

Equation for K Value:

$$\frac{4Q}{\pi * d(2H_2^2 + 4H_2D_s + H_2d)}$$

k = 3.01E-04 CF/S/Ft^2 - Ft Head

H_2 = 3.58 Ft Hydraulic Head

Soil profile:

0-0.8' Asphalt and limerock base

0.8'-10' Sand (SP) with shell fragments

10'-15' Brown Shelly Sand (SP)

Where:

Hydraulic Conductivity

K= 3.01E-04 CF/S/Ft^2 - Ft Head

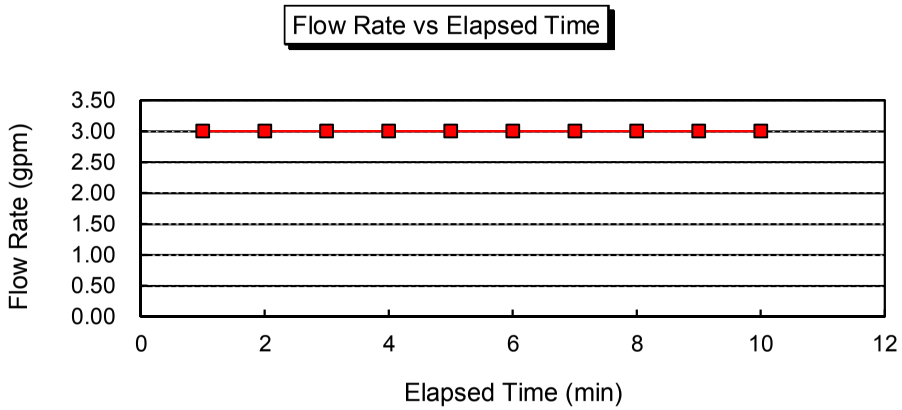

tierra SOUTH FLORIDA
GEOTECHNICAL ENGINEERING / MATERIAL TESTING / INSPECTION SERVICES

USUAL OPEN - HOLE TEST EVALUATION
SOUTH FLORIDA WATER MANAGEMENT METHOD

Client:	RDC, Inc	Test No.:	BHP-2B	Date:	11/15/13
Project:	International Swimming Hall of Fame	Well Depth:	20.0 Feet	Analyst:	Wen
Job No.:	7111-13-233	Location:	Fort Lauderdale, Florida		

Elapsed Time (min)		Flow Rate (gpm)
0	0.00	0.00
1	3.00	3.00
2	6.00	3.00
3	9.00	3.00
4	12.00	3.00
5	15.00	3.00
6	18.00	3.00
7	21.00	3.00
8	24.00	3.00
9	27.00	3.00
10	30.00	3.00
Constant Flow Rate (gpm)		3.00

Equation for K Value:

$$\frac{4Q}{\pi * d(2H_2^2 + 4H_2D_s + H_2d)}$$

k = 2.12E-04 CF/S/Ft^2 - Ft Head

H_2 = 3.58 Ft Hydraulic Head

Soil profile:

0-0.8' Asphalt and limerock base

0.8'-10' Sand (SP) with shell fragments

10'-20' Brown Shelly Sand (SP)

Where:

Hydraulic Conductivity

K= 2.12E-04 CF/S/Ft^2 - Ft Head

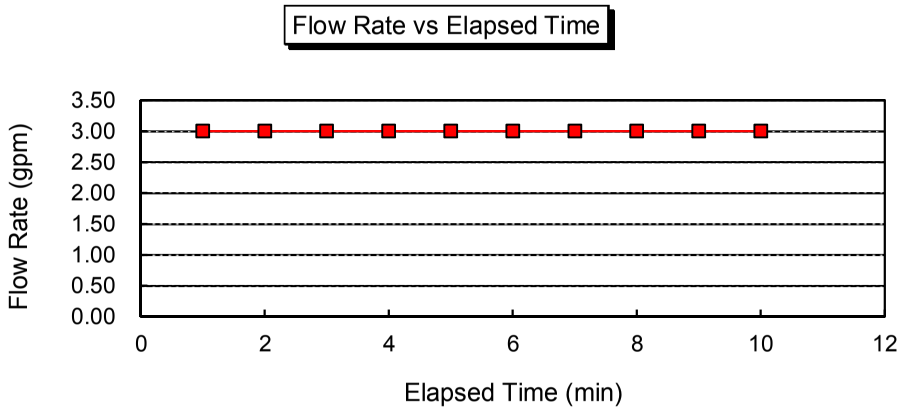

tierra SOUTH FLORIDA
GEOTECHNICAL ENGINEERING / MATERIAL TESTING / INSPECTION SERVICES

USUAL OPEN - HOLE TEST EVALUATION
SOUTH FLORIDA WATER MANAGEMENT METHOD

Client:	RDC, Inc	Test No.:	BHP-3A	Date:	11/15/13
Project:	International Swimming Hall of Fame	Well Depth:	15.0 Feet	Analyst:	Wen
Job No.:	7111-13-233	Location:	Fort Lauderdale, Florida		

Elapsed Time (min)		Flow Rate (gpm)
0	0.00	0.00
1	2.00	2.00
2	4.00	2.00
3	6.00	2.00
4	8.00	2.00
5	10.00	2.00
6	12.00	2.00
7	14.00	2.00
8	16.00	2.00
9	18.00	2.00
10	20.00	2.00
Constant Flow Rate (gpm)		2.00

Equation for K Value:

$$\frac{4Q}{\pi * d(2H_2^2 + 4H_2D_s + H_2d)}$$

k = 2.67E-04 CF/S/Ft^2 - Ft Head

H_2 = 2.58 Ft Hydraulic Head

Where:

Hydraulic Conductivity

K= 2.67E-04 CF/S/Ft^2 - Ft Head

Soil profile:

0-0.5' Asphalt and Limerock base

0.5'-10' Gray sand (SP) with shell fragments

10'-15' Brown Shelly Sand (SP)

Flow Rate vs Elapsed Time

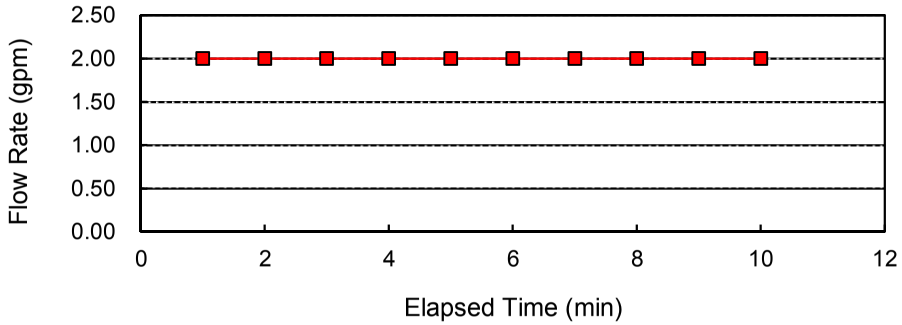

tierra SOUTH FLORIDA
GEOTECHNICAL ENGINEERING / MATERIAL TESTING / INSPECTION SERVICES

USUAL OPEN - HOLE TEST EVALUATION
SOUTH FLORIDA WATER MANAGEMENT METHOD

Client:	RDC, Inc	Test No.:	BHP-3B	Date:	11/15/13
Project:	International Swimming Hall of Fame	Well Depth:	20.0 Feet	Analyst:	Wen
Job No.:	7111-13-233	Location:	Fort Lauderdale, Florida		

Elapsed Time (min)		Flow Rate (gpm)
0	0.00	0.00
1	2.50	2.50
2	5.00	2.50
3	7.50	2.50
4	10.00	2.50
5	12.50	2.50
6	15.00	2.50
7	17.50	2.50
8	20.00	2.50
9	22.50	2.50
10	25.00	2.50
Constant Flow Rate (gpm)		2.50

Equation for K Value:

$$\frac{4Q}{\pi * d(2H_2^2 + 4H_2D_s + H_2d)}$$

k = 2.38E-04 CF/S/Ft^2 - Ft Head

H_2 = 2.58 Ft Hydraulic Head

Soil profile:

0-0.5' Asphalt and Limerock base

0.5'-10' Gray sand (SP) with shell fragments

10'-20' Brown Shelly Sand (SP)

Where:

Hydraulic Conductivity

K= 2.38E-04 CF/S/Ft^2 - Ft Head

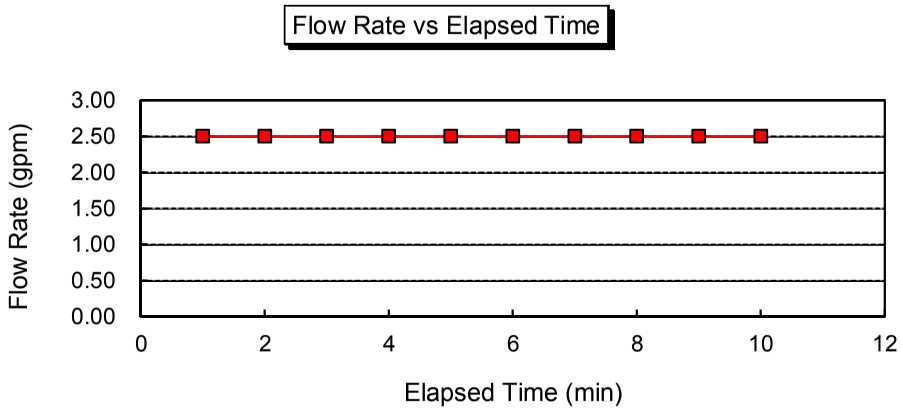

tierra SOUTH FLORIDA
GEOTECHNICAL ENGINEERING / MATERIAL TESTING / INSPECTION SERVICES

USUAL OPEN - HOLE TEST EVALUATION
SOUTH FLORIDA WATER MANAGEMENT METHOD

Client:	RDC, Inc	Test No.:	BHP-4A	Date:	11/15/13
Project:	International Swimming Hall of Fame	Well Depth:	15.0 Feet	Analyst:	Wen
Job No.:	7111-13-233	Location:	Fort Lauderdale, Florida		

Elapsed Time (min)		Flow Rate (gpm)
0	0.00	0.00
1	2.00	2.00
2	4.00	2.00
3	6.00	2.00
4	8.00	2.00
5	10.00	2.00
6	12.00	2.00
7	14.00	2.00
8	16.00	2.00
9	18.00	2.00
10	20.00	2.00
Constant Flow Rate (gpm)		2.00

Equation for K Value:

$$\frac{4Q}{\pi * d(2H_2^2 + 4H_2D_s + H_2d)}$$

k = 1.36E-04 CF/S/Ft^2 - Ft Head

H_2 = 5.00 Ft Hydraulic Head

Where:

Hydraulic Conductivity

K= 1.36E-04 CF/S/Ft^2 - Ft Head

Soil profile:

0-0.3'	Topsoil
0.3'-3'	Gray sand with shell fragments (SP)
3'-5'	Gray silty Sand (SM)
5'-10'	Gray Sand with trace of shell (SP)
10'-20'	Brown Shelly Sand (SP)

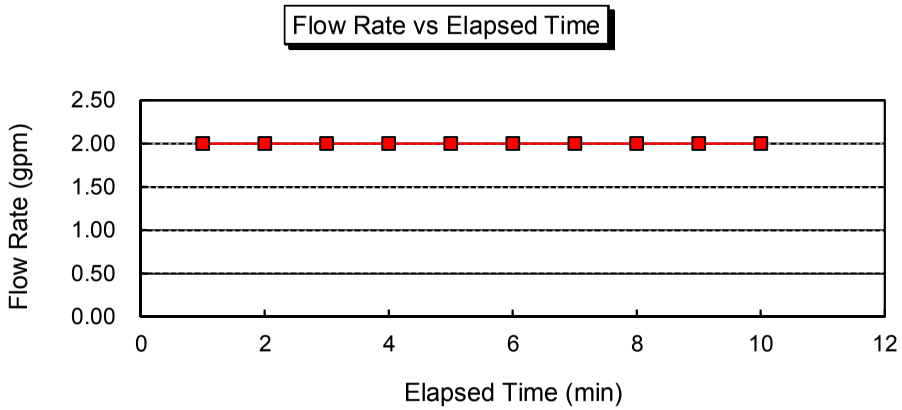

tierra SOUTH FLORIDA
GEOTECHNICAL ENGINEERING / MATERIAL TESTING / INSPECTION SERVICES

USUAL OPEN - HOLE TEST EVALUATION
SOUTH FLORIDA WATER MANAGEMENT METHOD

Client:	RDC, Inc	Test No.:	BHP-4B	Date:	11/15/13
Project:	International Swimming Hall of Fame	Well Depth:	20.0 Feet	Analyst:	Wen
Job No.:	7111-13-233	Location:	Fort Lauderdale, Florida		

Elapsed Time (min)		Flow Rate (gpm)
0	0.00	0.00
1	2.00	2.00
2	4.00	2.00
3	6.00	2.00
4	8.00	2.00
5	10.00	2.00
6	12.00	2.00
7	14.00	2.00
8	16.00	2.00
9	18.00	2.00
10	20.00	2.00
Constant Flow Rate (gpm)		2.00

Equation for K Value:

$$\frac{4Q}{\pi * d(2H_2^2 + 4H_2D_s + H_2d)}$$

k = 9.70E-05 CF/S/Ft^2 - Ft Head

H_2 = 5.00 Ft Hydraulic Head

Soil profile:

0-0.3' Topsoil
0.3'-3' Gray sand with shell fragments (SP)
3'-5' Gray silty Sand (SM)
5'-10' Gray Sand with trace of shell (SP)
10'-20' Brown Shelly Sand (SP)

Where:

Hydraulic Conductivity

K= 9.70E-05 CF/S/Ft^2 - Ft Head

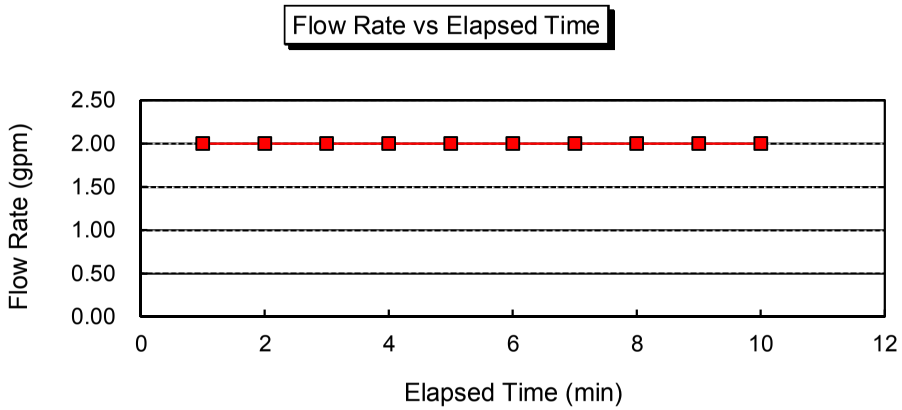

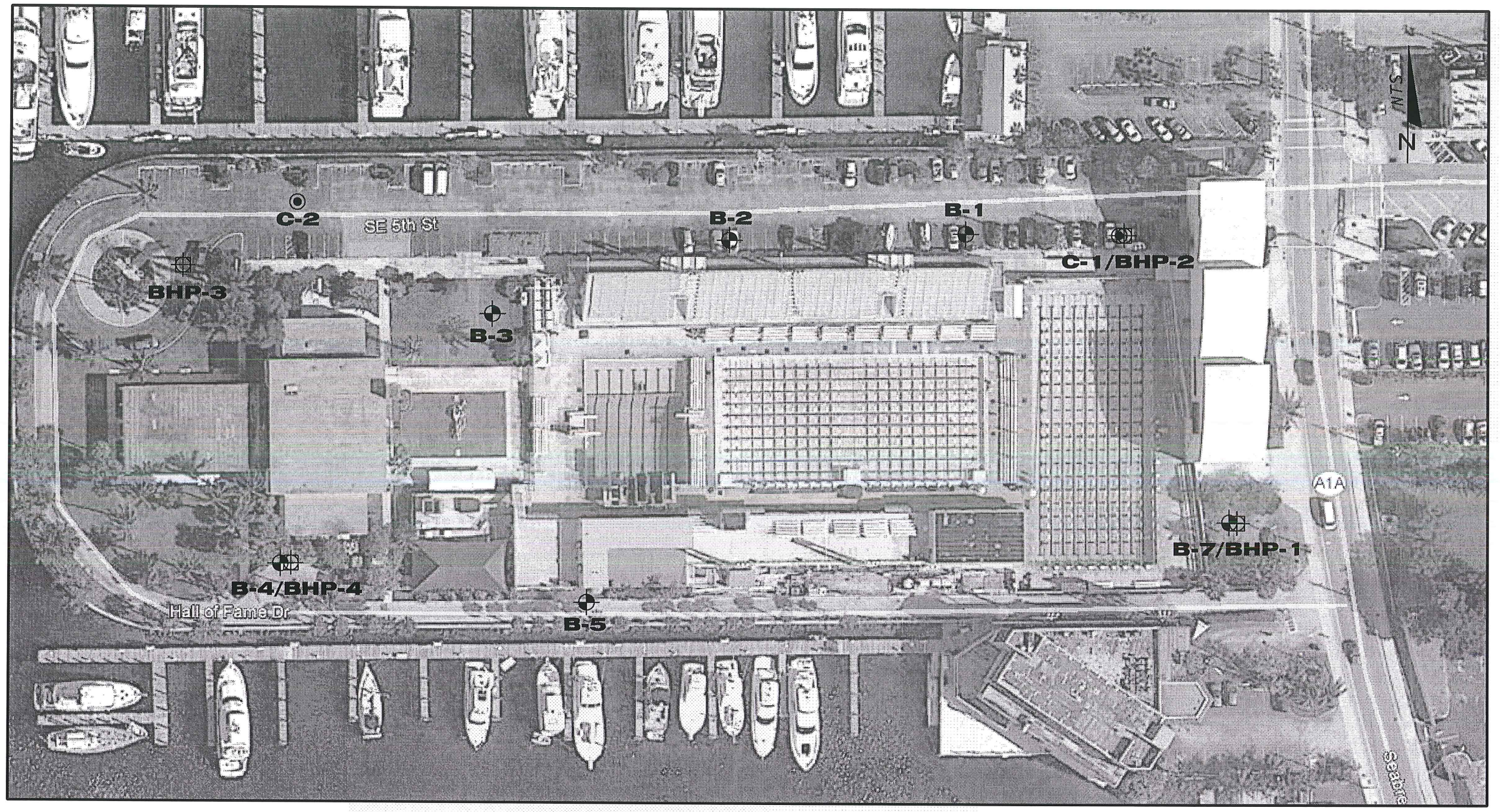

BORING LOCATION PLAN

- Approximate Location of SPT Boring
- Approximate Location of BHP Boring
- Approximate Location of PC Boring

DRAWN BY: NG	APPROVED BY: RK		ENGINEER OF RECORD: RAJ KRISHNASAMY, P.E. P.E. LICENSE NUMBER 53567 TIERRA SOUTH FLORIDA 2765 VISTA PARKWAY, S-10 WEST PALM BEACH, FL 33411 CERTIFICATE OF AUTHORIZATION 28073	SCALE: NTS	PROJECT NUMBER: 7111-13-233	GEOTECHNICAL ENGINEERING SERVICES INTERNATIONAL SWIMMING HALL OF FAME FORT LAUDERDALE, FLORIDA	SHEET 1
CHECKED BY: JO	DATE: 09/10/2013						

ngonzalez 9/10/2013 5:00:26 PM J:\Tierra Documents\Projects\TSF 2013\111-13-233. International Swimming Hall of Fame (RDC)\BIBORING.dgn

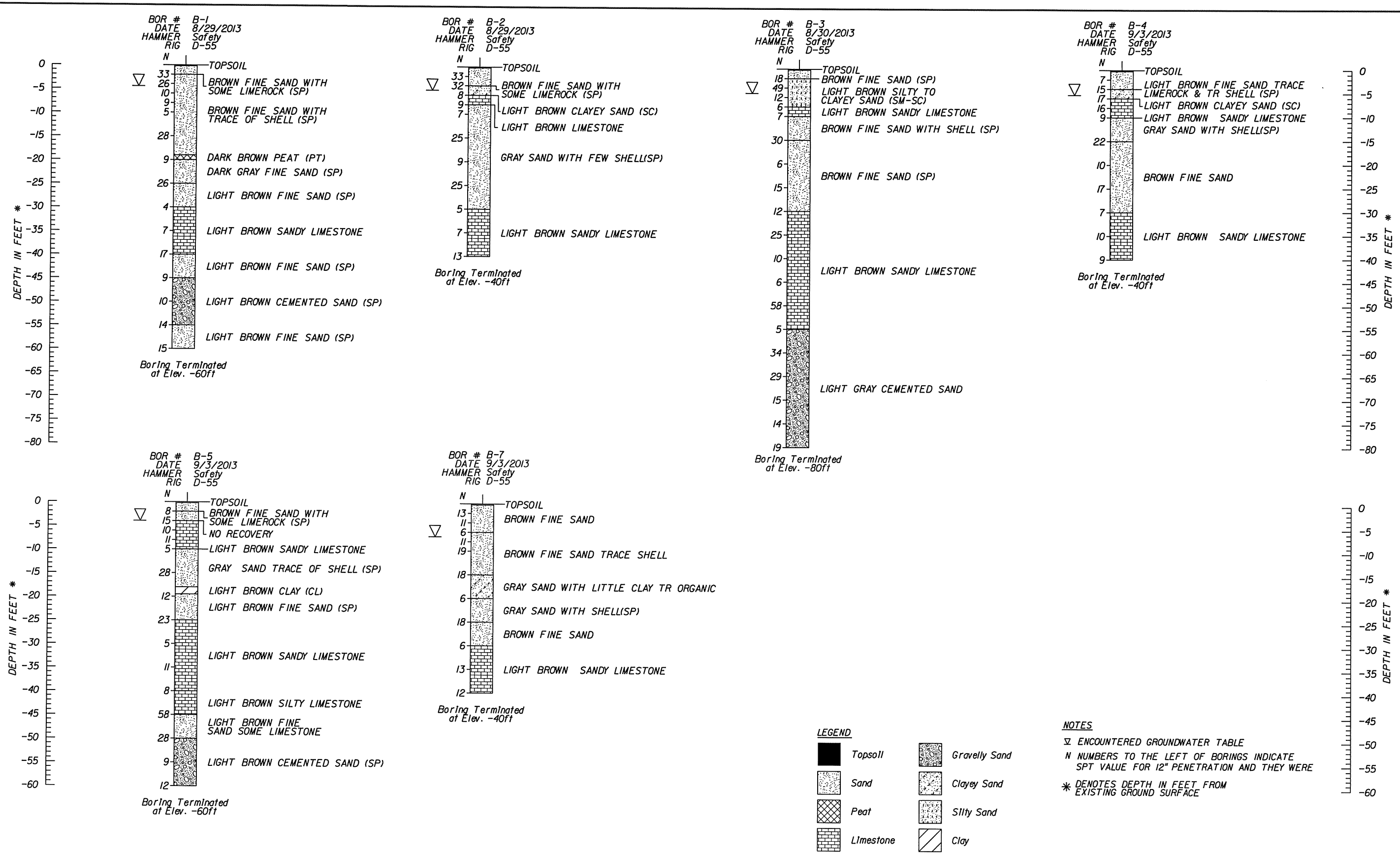

DRAWN BY: NG	APPROVED BY: RK		ENGINEER OF RECORD: RAJ KRISHNASAMY, P.E. P.E. LICENSE NUMBER 53567 TIERRA SOUTH FLORIDA 2765 VISTA PARKWAY, S-10 WEST PALM BEACH, FL 33411 CERTIFICATE OF AUTHORIZATION 28073	SCALE: NTS	PROJECT NUMBER: 7111-13-233	GEOTECHNICAL ENGINEERING SERVICES INTERNATIONAL SWIMMING HALL OF FAME FORT LAUDERDALE, FLORIDA	SHEET 2
CHECKED BY: JO	DATE: 09/10/2013						

ngonzalez 9/10/2013 4:47:18 PM J:\Tierra Documents\Projects\TSF 2013\7111-13-233. International Swimming Hall of Fame (RDC)\BIBORING.dgn

FÉDÉRATION INTERNATIONALE DE NATATION

PART IX

FINA FACILITIES RULES

2015 - 2017

- Preamble

FR 1 General

FR 2 Swimming Pools

FR 3 Swimming Pools for Olympic Games and World Championships

FR 4 Automatic Officiating Equipment

FR 5 Diving Facilities

FR 6 Diving Facilities for Olympic Games and World Championships

FR 7 Pools for Water Polo

FR 8 Water Polo Pools for Olympic Games and World Championships

FR 9 Equipment for Water Polo Pools

FR 10 Pools for Synchronised Swimming

FR 11 Pools for Synchronised Swimming in Olympic Games & World Championships

FR 12 Automatic Officiating Equipment

FR 13 Sound Equipment and Presentation Standards

FR 14 High Diving

FÉDÉRATION INTERNATIONALE DE NATATION

PREAMBLE

The Facilities Rules are intended to provide the best possible environment for ***competitive use and training.*** These Rules are not intended to govern issues related to the general public. It is the responsibility of the owner or controller of a facility to provide supervision for activities undertaken by the general public.

FR 1 GENERAL

FR 1.1 FINA Olympic Standard Pools. All World Championships (except the Masters World Championships) and Olympic Games must be held in pools that comply with Rules FR 3, FR 6, FR 8, and FR 11.

FR 1.2 FINA General Standard Pools. Other FINA events should be held in FINA Olympic Standard Pools, but the Bureau may waive certain standards for existing pools if they do not materially interfere with the competitions.

FR 1.3 FINA Minimum Standard Pools. All other events held under FINA Rules should be conducted in pools that comply with all of the minimum standards contained within these Facilities Rules.

FR 1.4 In order to protect the health and safety of persons using swimming facilities for the purposes of recreation, training and competition, owners of public pools or pools restricted only to training and competition must comply with the requirements established by law and the health authorities in the country where the pool is situated.

FR 1.5 New competition equipment (e.g. Starting blocks, lane-ropes, etc.) must be available by 1st January in the year of the Olympic Games and FINA World Championships.

FR 2 SWIMMING POOLS

FR 2.1 Length

FR 2.1.1 50.000 metres. When touch panels of Automatic Officiating Equipment are used on the starting end, or additionally on the turning end, the pool must be of such length that ensures the required distance of 50.000 metres between the two panels. *See Swimming Diagram 1. 50m Fig 1*

FR 2.1.2 25.000 metres. When touch panels of Automatic Officiating Equipment are used on the starting end, or additionally on the turning end, the pool must be of such length that ensures the required distance of 25.000 metres between the two panels. *See Swimming Diagram 2. 25m Fig 2*

FÉDÉRATION INTERNATIONALE DE NATATION

FR 2.2 Dimensional Tolerances

FR 2.2.1 Against the nominal length of 50.000 metres, a tolerance of plus 0.030 metre in each lane minus 0.000 metre on both end walls at all points from 0.300 metre above to 0.800 metre below the surface of the water is allowed. These measurements should be certified by a surveyor or other qualified official, appointed or approved by the Member in the country in which the pool is situated. Tolerances cannot be exceeded when touch panels are installed**.** *See Swimming Diagram 1. 50m Fig 1*

FR 2.2.2 Against the nominal length of 25.000 metres, a tolerance of plus 0.030 metre in each lane minus 0.00 metre on both end walls at all points from 0.300 metre above to 0.800 below the surface of the water is allowed. These measurements should be certified by a surveyor or other qualified official, appointed or approved by the Member in the country, in which the pool is situated. Tolerances cannot be exceeded when touch panels are installed. *See Swimming Diagram 2. 25m Fig 2*

FR 2.3 Depth - A minimum depth of 1.35 metres, extending from 1.0 metre to at least 6.0 metres from the end wall is required for pools with starting blocks. A minimum depth of 1.0 metre is required elsewhere.

FR 2.4 Walls

FR 2.4.1 End walls shall be vertical, parallel and form 90 degree right angles to the swimming course and to the surface of the water. They shall be constructed of solid material, with a non slip surface extending 0.8 metre below the water surface, so as to enable the competitor to touch and push off in turning without hazard.

FR 2.4.2 Rest ledges along the pool walls are permitted; they must be not less than 1.2 metres below the water surface, and may be 0.1 metre to 0.15 metre wide. Both internal and external ledges are acceptable, however internal ledges are preferred.

FR 2.4.3 Gutters may be placed on all four walls of the pool. If end wall gutters are installed, they must allow for attachment of touch panels to the required 0.3 metre above the water surface. They must be covered with a suitable grill or screen.

FR 2.5 Lanes shall be at least 2.5 metres wide, with two spaces of at least 0.2 metre outside of the first and last lanes.

FÉDÉRATION INTERNATIONALE DE NATATION

FR 2.6 Lane Ropes

FR 2.6.1 In an 8 lane pool, lane ropes shall extend the full length of the course, secured at each end wall to anchor brackets recessed into the end walls. The anchor shall be positioned so that the floats at each end wall of the pool shall be on the surface of the water. Each lane rope will consist of floats placed end-to-end having a minimum diameter of 0.10 metre to a maximum of 0.15 metre.

In a swimming pool the colour of the lane ropes should be as follows:
• Two (2) GREEN ropes for lanes 1 and 8
• Four (4) BLUE ropes for lanes 2, 3, 6 and 7
• Three (3) YELLOW ropes for lanes 4 and 5
The floats extending for a distance of 5.0 metres from each end of the pool shall be of RED colour.
There shall not be more than one lane rope between each lane. The lane ropes shall be firmly stretched. *See Swimming Diagram 2. 25m Fig. 4*

FR 2.6.2 At the 15-metre mark from each end wall of the pool the floats shall be distinct in colour from the surrounding floats.

FR 2.6.3 In 50 metre pools the floats shall be distinct to mark 25 metres.

FR 2.6.4 Lane numbers of soft material may be placed on the lane ropes at the start and turning end of the pool.

FR 2.6.5 Lane marking measurements, please read in conjunction with FR 2.6.6 *Pool Diagram.*

FR 2.6.6 Pool Diagrams.
See Swimming Diagram 1, 50m - Olympic Games and World Championships
See Swimming Diagram 2, 25m - Diagrams and Lane Markings

FR 2.7 Starting Platforms
Starting Platforms shall be firm and give no springing effect. The height of the platform above the water surface shall be from 0.5 metre to 0.75 metre. The surface area shall be at least 0.5 metre x 0.5 metre and covered with a non-slip material. Maximum slope shall not be more than 10 degrees. The starting platform may have an adjustable setting back plate. The platform shall be constructed so as to permit the gripping of the platform by the swimmer in the forward start at the front and the sides; it is recommended that, if the thickness of the starting platform exceeds 0.04 metre, grips of at least 0.1 metre width on each side and 0.4 metre width in the front be cut out to 0.03 metre from the surface of the platform. Handgrips for the forward start may be installed on the sides of the starting platforms. Handgrips for backstroke starts shall be placed within 0.3 mete to 0.6 metre above the water surface both horizontally and vertically. They shall be parallel to the surface of the end wall and must not protrude beyond the end wall. The water depth from a distance of 0.1 metre to 0.6 metres from the end wall must be 1.35 metres where starting platforms are installed. Electronic read-out boards may be installed under the blocks. Flashing is not allowed. Figures must not move during a backstroke start. *See Swimming Diagrams 1 & 2, Fig. 3*

FÉDÉRATION INTERNATIONALE DE NATATION

FR 2.8 Numbering
Each starting block must be distinctly numbered on all four sides, clearly visible. Lane number 0 shall be on the right-hand side when facing the course from the starting end with exception of 50m events, which may start from the opposite end. Touch panels may be numbered on the top part.

FR 2.9 Backstroke Turn Indicators - Flagged ropes shall be suspended across the pool, 1.8 metres above the water surface, from fixed standards placed 5.0 metres from each end wall. Distinctive marks must be placed on both sides of the pool, and where possible on each lane rope, 15.0 metres from each end wall.

FR 2.10 Backstroke Ledge

A backstroke ledge may be used:
- The ledge may be adjustable to 4 cm above or 4 cm below the water level.
- The ledge is a minimum of 65 cm in length.
- The ledge must be 8 cm in height, 2 cm at the width with 10 degrees of slope

See Diagram

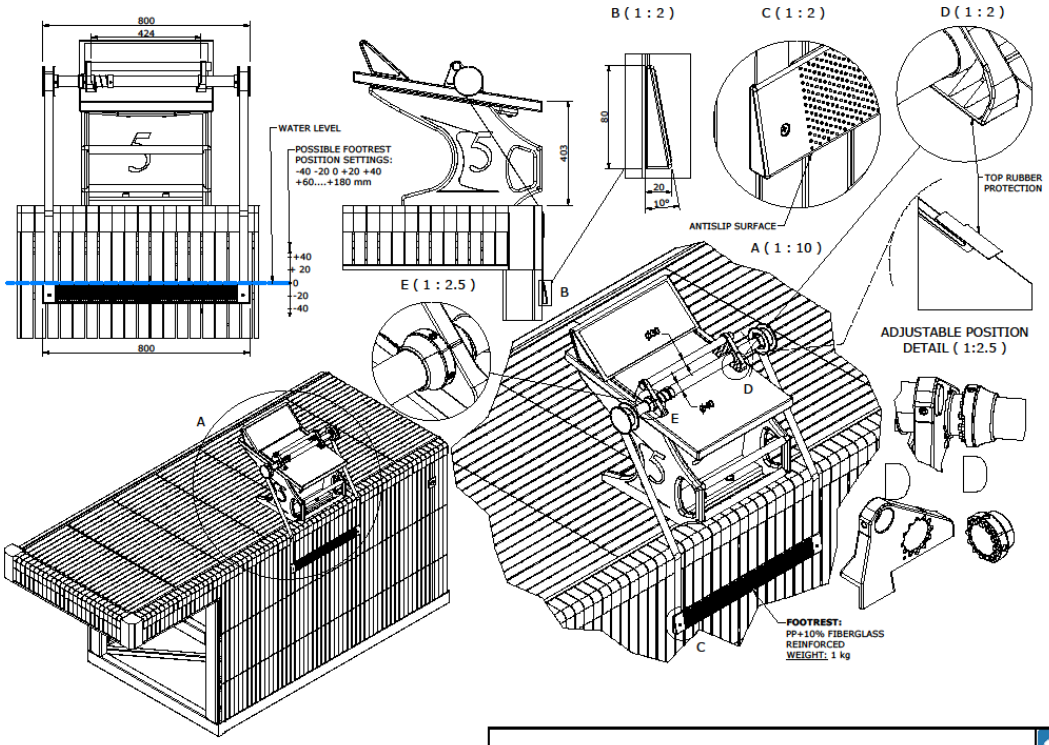

BACKSTROKE LEDGE

FÉDÉRATION INTERNATIONALE DE NATATION

FR 2.11 **False Start Rope may** be suspended across the pool not less than 1.2 metres above the water level from fixed standards placed 15.0 metres in front of the starting end. It shall be attached to the standards by a quick release mechanism. The rope must effectively cover all lanes when activated. *See Pool Diagrams* in FR 2.6.6. *See Swimming Diagrams 1 & 2, Fig. 1 & Fig 2*

FR 2.12 **Water Temperature** shall be 25° - 28°. During competition the water in the pool must be kept at a constant level, with no appreciable movement. In order to observe health regulations in force in most countries, inflow and outflow is permissible as long as no appreciable current or turbulence is created.

FR 2.13 **Lighting** - Light intensity over starting platforms and turning ends shall not be less than 600 lux.

FR 2.14 **Lane Markings** shall be of a dark contrasting colour, placed on the floor of the pool in the centre of each lane.
Width: minimum 0.2 metre, maximum 0.3 metre.
Length: 46.0 metres for 50 metre long pools;
21.0 metres for 25 metre long pools.
Each lane line shall end 2.0 metres from the end wall of the pool with a distinctive cross line 1.0 metre long and of the same width as the lane line. Target lines shall be placed on the end walls or on the touch panels, in the centre of each lane, of the same width as the lane lines.

They shall extend without interruption from the deck edge (curb), to the floor of the pool to a maximum of 3 metres. A cross line 0.5 metre long shall be placed 0.3 metre below the water surface, measured to the centre point of the cross line.
For 50m pools constructed after 1 January 2006, cross lines 0.5 metre long shall be placed at the 15 metre mark from each end of the pool. After October 2013 this shall be measured from the end wall to the centre point of the cross line.

See Swimming Diagrams 1 & 2. Lane markings Fig 5, 6, 7 & 8.

FR 2.15 **Bulkheads** – When a bulkhead serves as an end wall, it must extend the full width of the course and present a solid smooth, non-slippery stable vertical surface on which touch pads may be mounted extending not less than 0.8m below and 0.3m above the surface of the water, and must be free of hazardous openings above or below the waterline which may be penetrated by a swimmer's hands, feet, toes or fingers. A bulkhead must be of a design that provides for the free movement of officials along its length without such movement creating any appreciable current or water turbulence.

FÉDÉRATION INTERNATIONALE DE NATATION

FR 3 SWIMMING POOLS FOR OLYMPIC GAMES AND WORLD CHAMPIONSHIPS

Length: 50.0 metres between the Automatic Officiating Equipment touch panels, except for the World Swimming Championships (25m), which shall be 25.0 metres between the Automatic Officiating Equipment touch panels at the starting end and the wall or touch panels at the turning end.

FR 3.1 Dimensional Tolerances as in FR 2.2.1.

FR 3.2 **Width:** 25.0 metres for Olympic Games and World Championships.

FR 3.3 **Depth:** 2 Metres (minimum); 3 metres recommended, when using the pool for multi disciplines i.e. synchronised swimming.

FR 3.4 **Walls:** as in FR 2.4.1.

FR 3.5 Pools for Olympic Games and World Championships must be equipped with flush walls (consistently flat) at both ends.

FR 3.6 **Number of lanes:** 8 (eight), for World Championships and Olympic Games: 10 (ten).

FR 3.7 Lanes shall be 2.5 metres wide with 2 spaces 2.5 metres wide outside of lanes 1 – 8. There must be a lane rope separating these spaces from lanes 1 and 8 for Olympic Games and world championships. If 10 lanes, these must be marked from 0 to 9.

FR 3.8 **Lane Ropes:** Lane Ropes shall extend the full length of the course, secured at each end wall to anchor brackets recessed into the end walls. The anchor shall be positioned so that the floats at each end wall of the pool shall be on the surface of the water. Each lane rope will consist of floats placed end-to-end having a minimum diameter of 0.10 metre to a maximum of 0.15 metre.

In a swimming pool the colour of the lane ropes should be as follows:

- Two (2) GREEN ropes for lanes 0 and 9
- Six (6) BLUE ropes for lanes 1, 2, 3, 6, 7 and 8
- Three (3) YELLOW ropes for lanes 4, 5

The floats extending for a distance of 5.0 metres from each end of the pool shall be of RED colour.

FÉDÉRATION INTERNATIONALE DE NATATION

There shall not be more than one lane rope between each lane. The lane ropes shall be firmly stretched.

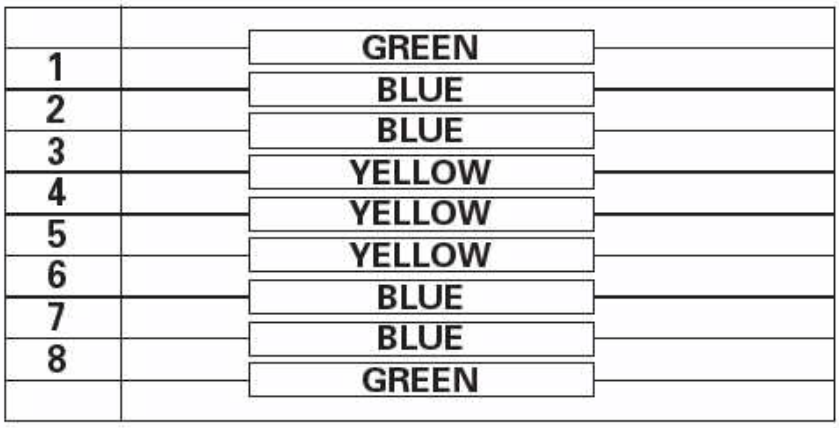

FR 3.9 Starting Platforms: as in FR 2.7.
Except the surface area shall be at least 0.5 metres wide X 0.6 metres in length and covered with non-slip material. False start control equipment must be installed.

FR 3.10 Numbering: as in FR 2.8.

FR 3.11 Backstroke turn indicators: as in FR 2.9, Flagged ropes must be 1.8 metres above the water surface. Flags must be fixed to the ropes having the following dimensions: 0.20m metres on the rope forming a triangle measuring 0.40 metres on the sides. The distance between each flag must be 0.25metres. If the flags are printed with or support / carry any signage this must be approved in advance by FINA

FR 3.12 False Start Rope: as in FR 2.11

FR 3.13 Water Temperature: as in FR 2.12

FR 3.14 Lighting: Light intensity over the whole pool shall not be less than 1500 lux.

FR 3.15 Lane Markings: as in FR 2.14. The distance between the centre points of each lane shall be 2.5 metres

FÉDÉRATION INTERNATIONALE DE NATATION

FR 3.16 If the swimming pool and the diving well are in the same area the minimum distance separating the pools shall be 5.0 metres. For pools constructed from 1 January 2014 the minimum distance separating the pool shall be a minimum of 8 metres however 10 metres is preferred

FR 4 AUTOMATIC OFFICIATING EQUIPMENT

FR 4.1 Automatic and Semi-Automatic Officiating Equipment records the elapsed time of each swimmer and determines the relative place in a race. Judging and timing shall be to 2 decimal places (1/100 of a second). Equipment that is installed shall not interfere with the swimmers' starts, turns, or the function of the overflow system.

FR 4.2 The Equipment must:

FR 4.2.1 Be activated by the starter.

FR 4.2.2 Have no exposed wires on the pool deck, if possible.

FR 4.2.3 Be able to display all recorded information for each lane by place and by lane.

FR 4.2.4 Provide easy digital reading of a swimmer's time.

FR 4.3 Starting devices

FR 4.3.1 The starter shall have a microphone for oral commands.

FR 4.3.2 If a pistol is used, it shall be used with a transducer.

FR 4.3.3 Both the microphone and the transducer shall be connected to loudspeakers at each starting block where both the starter's commands and the starting signal can be heard equally and simultaneously by each swimmer.

FR 4.4 Touch panels for Automatic Equipment

FR 4.4.1 The minimum measurement of the touch panels shall be 2.4 metres wide and 0.9 metre high, and their thickness shall be 0.01 metre ± 0.002 metre. They shall extend 0.3 metre above and 0.6 metre below the surface of the water. The equipment in each lane shall be connected independently, so it may be controlled individually. The surface of the panels shall be of a bright colour and shall bear the line markings approved for the end walls.

FR 4.4.2 Installation - The touch panels shall be installed in a fixed position in the centre of the lanes. The panels may be portable, allowing the pool operator to remove them when there are no competitors.

FR 4.4.3 Sensitivity - The sensitivity of the panels shall be such that they cannot be activated by water turbulence, but will be activated by a light hand touch. The panels shall be sensitive on the top edge.

FÉDÉRATION INTERNATIONALE DE NATATION

FR 4.4.4 Markings - The markings on the panels shall conform with and superimpose on the existing markings of the pool. The perimeter and edges of the panels shall be defined by a 0.025 metre black border.

FR 4.4.5 Safety - The panels shall be safe from the possibility of electrical shock and shall not have sharp edges.

FR 4.5 With Semi-Automatic Equipment, the finish shall be recorded by buttons pushed by timekeepers at the finish touch of the swimmer.

FR 4.6 The following accessories are essential for a minimum installation of Automatic Equipment:

FR 4.6.1 Printout of all information, which can be regenerated during a succeeding race.

FR 4.6.2 Spectator readout board.

.

FR 4.6.3 Relay take-off judging to 1/100 of a second. Where overhead video cameras are installed they may be reviewed as a supplement to the automatic system's judgement of relay take-off. For the differential in the relays take-off the manufacturer of the device shall be consulted.

FR 4.6.4 Automatic lap counter.

FR 4.6.5 Readout of splits.

FR 4.6.6 Computer summaries.

FR 4.6.7 Correction of erroneous touch.

FR 4.6.8 Automatic rechargeable battery operation possibility.

FR 4.7 For Olympic Games and World Championships the following accessories are also essential:

FR 4.7.1 The spectator electronic read-out board shall contain at least twelve (12) lines of thirty-two (32) characters, each capable of displaying both letters and numbers. Each character shall have a minimum height of 360 mm. Each line –matrix scoreboard shall be able to scroll up or down, with blink function, and each full matrix scoreboard shall be programmable, and capable of showing animation. The board must have a minimum size of 7.5 m width by 4.5m height.

FR 4.7.2 There shall be an air-conditioned control centre, with dimensions of a least 6.0 metres x 3.0 metres, located between 3.0 metres and 5.0 metres from the finish wall, with an unobstructed view of the finish wall at all times during the race. The referee must have easy access to the control centre during the competition. At all other times the control centre shall be able to be secured.

FÉDÉRATION INTERNATIONALE DE NATATION

FR 4.7.3 Video-tape timing system.

FR 4.8 Semi-Automatic Equipment may be used as a backup to the Automatic Officiating Equipment at FINA or other major events if there are three buttons per lane, each operated by a separate official (in which case other finish judges shall not be required). An inspector of turns may operate one of the buttons.

DIAGRAMS FOR SWIMMING (Total 3)

FR 5 DIVING FACILITIES

FR 5.1 Springboard Diving

General requirements: Dimensions in metres for all diving facilities as detailed in *Diving Diagram,* ***Annex 1.1 & Annex 1.2,*** shall be observed.

FR 5.1.1 The springboards shall be at least 4.8 metres long and 0.5 metre wide. At all FINA Events, the type of springboard which must have a non slip surface shall be approved by FINA.

FR 5.1.2 The springboards shall be provided with movable fulcrums easily adjustable by the diver.

FR 5.1.3 For springboard diving facilities modified or constructed on concrete platforms after 1 October 2013, the following shall be observed

FR 5.1.3.1 The vertical distance from the level of the platform, which supports the fulcrum assembly, to the level of the top of the springboard, shall be 0.35metre**.**

FR 5.1.3.2 The distance from the front edge of the fulcrum assembly (which is 0.741 metres in length) to the front edge of the supporting platform, shall be a maximum of 0.44 metre.

FR 5.1.3.3 If the front edge of the platform projects past this point then the fulcrum assembly and the rear hinge assembly must be moved forward so as to provide for a maximum of 0.44 metres from the front edge of the platform to the front of the fulcrum assembly

FR 5.1.4 The minimum distance recommended from the rear to the centre line of the fulcrum shall be in accordance with the recommendation or specification of the springboard manufacturer,

FR 5.1.5 The springboards shall be installed dead level at the leading edge when the movable fulcrum is in all positions.

FÉDÉRATION INTERNATIONALE DE NATATION

FR 5.1.6 The springboards should be placed on either one or both sides of the platform. For Synchronised Diving, it is required that at least two springboards at the same height shall be placed side by side and no objects should obstruct the visibility in any part of the dive between the divers. *See Diving Diagram, Annex 2.1 & Annex 2.2*

FR 5.2 Platform Diving

FR 5.2.1 Each platform shall be rigid and horizontal.

FR 5.2.2 The minimum dimensions of the platform shall be:

0.6m to 1.0m platform	1.00m width (2.90m preferred)	5.00m length
2.6m to 3.0m platform	1.00m width (2.00m preferred)	5.00m length
5.0m platform	2.90 width	6.00m length
7.5m platform	2.00m width	6.00m length
10.0m platform	3.00m width	6.00m length

On 10m platforms, with a width of less than 3m, only the handrails on each side for a distance of at least 3.0m back from the front edge of the platform may be shaped as detailed below. It is recommended that an easily removable section of handrail be included for general use, which can be removed for synchronised diving (see diagram).

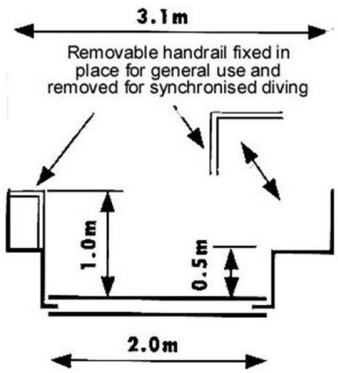

FR 5.2.3 The preferred thickness of the front edge of the platform shall be 0.2 metre but not exceeding 0.3 metre, and can be vertical or inclined at an angle not greater than 10° to the vertical inside the plummet line.

FR 5.2.4 The surface and the front edge of the platform shall be covered throughout with a resilient non-slip surface. The two surfaces shall be covered separately in order to achieve a clean 90° angle or as described in FR 5.2.3. The front surface is to be applied first and then the top surface.

FÉDÉRATION INTERNATIONALE DE NATATION

FR 5.2.5 The platforms shall be covered in an anti-slip material that shall have a tread pattern that provides sufficient traction in wet and dry conditions such that the divers are prevented from slipping when performing dives in all directions. The minimum thickness must be 6mm (- 0 / + 1mm) and the colour should give a contrast to the surrounding décor. The material shall be easily cleaned to maintain the anti-slip feature of the product. The installation of the non-slip platform covering shall respect FINA Rule FR 5.2.4.

FR 5.2.6 The front edge of the 10 metre platform shall project at least 1.50 metres, the 7.5 metre, 5 metre and 2.6 – 3.0 metre platforms 1.25 metres, and the 0.6 – 1 metre platform 0.75 metre beyond the edge of the pool.

FR 5.2.7 Where a platform is directly underneath another platform the platform above shall project a minimum of 0.75 metre (preferred 1.25 metres) beyond the platform below.

FR 5.2.8 The back and sides of each platform (except 1.0 metre or lower platforms) shall be surrounded by handrails up to 1m from the edge of the platform with a minimum clearance of 1.8 metres between vertical pairs. The minimum height shall be 1.0 metre and they shall be with at least two horizontal crossbars placed outside the platform beginning 1.0 metre from the front edge of the platform.

FR 5.2.9 Each platform shall be accessible by suitable stairs (not ladders) as required by the countries building regulations and or health and safety standards that are applicable.

FR 5.2.10 It is preferable that a platform is not constructed directly under any other platform however in circumstance where this cannot be avoided then you must refer to *Diving Diagram, Annex 1.1, 1.2, 2.1 & 2.2.*

FÉDÉRATION INTERNATIONALE DE NATATION

FR 5.2.11 Requirements for the supporting structure. For platforms and supporting structure of the springboards the design load is p = 350 kiloponds (kilograms force) per lineal metre.

In addition to the static requirements and for the comfort and safety of the user with respect to the movement of the towers, the following limits shall be observed, with respect to the platforms and springboard supports.
Fundamental frequency of platforms 10.0 Hz
Fundamental frequency of tower 3.5 Hz
Oscillation of total structure 3.5 Hz

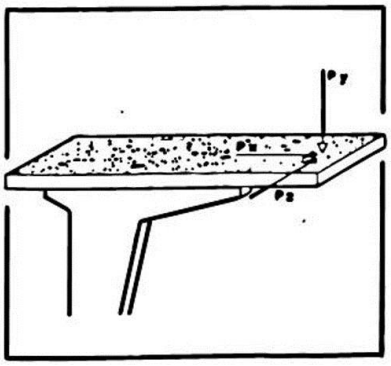

The spatial deformation of the front edge of the platforms as a result of Px = Py = Pz = 100 kiloponds (kilograms force) shall be a maximum of 1 mm (see drawing).
These requirements can be met most adequately by a reinforced concrete structure. Proof of the dynamic behaviour is to be obtained together with the static calculations for the whole structure.

FR 5.3 General Requirements

FR 5.3.1 For pools designed and constructed after 26th September 2013 the minimum dimensions in metres for diving facilities as detailed on the "Diving Facilities Diagram" (Annex 1.2) shall prevail, using, as a basic measuring point of reference, the plummet line, which is a vertical line extending through the centre of the front edge of the springboard or platform. It is recommended that the preferred dimensions be used for projects considered to have an important status.

FR 5.3.2 The dimensions C from plummet to adjacent plummet in the "FINA Dimensions for Diving", Annex 1.2 table apply to platforms with widths as detailed in FR 5.2.2. If platform widths are increased then the dimensions B and C shall be increased by half the additional widths.

FR 5.3.3 The height of the springboards and each platform above the water level may vary by plus 0.05 metre and minus 0.00 metre from the heights prescribed in the Rules.

FR 5.3.4 The end of 5, 3, and 1 metre platforms must not project beyond the ends of the 3 and 1 metre springboards when they are adjacent to each other.

FR 5.3.5 In the area of full water depth, the bottom of the pool may rise up to 2%. In the diving pool, the depth of water shall not be less than 1.8 metres at any point.

FÉDÉRATION INTERNATIONALE DE NATATION

FR 5.3.6 In outdoor pools, best practice suggests that springboards and platforms are recommended to face north in the northern hemisphere and south in the southern hemisphere.

FR 5.3.7 The minimum illumination at a level of 1 metre above the water surface shall not be less than 600 lux.

FR 5.3.8 Sources of natural and artificial illumination shall be provided with controls to prevent glare.

FR 5.3.9 The water temperature shall be not less than 26° Celsius.

FR 5.3.10 Mechanical surface agitation shall be installed under the diving facilities to aid the divers in their visual perception of the surface of the water. In pools equipped with an underwater bubble machine, the machine should only be used for this purpose if it creates sufficient water agitation when working with a very low pressure; otherwise a horizontal water sprinkler system should only be used.

FR 5.3.11 For Diving Pools that will also be used for swimming.
Lane markings for Diving pools shall be of a dark contrasting colour, placed on the floor of the pool in the centre of each lane.
Width: minimum 0.2 metre, maximum 0.3 metre.
Length: 21.0 metres for 25 metre long pools.
Each lane line shall end 2.0 metres from the end wall of the pool with a distinctive cross line 1.0 metre long and of the same width as the lane line. Target line shall be placed on the end of the walls or on the touch panels, in the centre of each lane, of the same width as the lane lines. A cross line 0.5 metre long shall placed 0.3 metre below the water surface, measured to the centre point of the cross line. They shall extend without interruption from the deck edge (curb) to the floor or to a maximum of 3 metres.

FR 5.3.12 Individual diving

FR 5.3.12.1 The judges will be placed side by side in a line on each side of the springboard / platform by the Referee.

FR 5.3.12.2 When seven (7) / five (5) judges are used, four (4) / three (3) judges will be on the side closest to the competition.
.
Note: The Referee may decide to place four (4) / three (3) judges farthest from the competition depending of the local situation in the pool.

FR 5.3.12.3 No judge shall be seated behind the front edge of the springboard or platform.

FR 5.3.12.4 The numbering of the judge chairs will be clockwise when facing the springboard / platform.

FÉDÉRATION INTERNATIONALE DE NATATION

FR 5.3.12.5 In the 1 metre springboard competitions, chairs suitable for use on poolside shall be used.

FR 5.3.12.6 In the 3 metre springboard competitions, the judges shall be seated at a height of not lower than two (2) metres above the water level.

FR 5.3.12.7 In the 10 metre platform competitions, the chairs from the 3m springboard competitions can be used but if at all possible, the judges shall be seated at an even higher level.

FR 5.3.12.8 To assist the judges in the 3 metre springboard and 10 metre platform competitions, the judge chairs must be positioned as far back from the edge of the pool as is practical.

FR 5.3.13 Synchronised diving

FR 5.3.13.1 Three (3) / two (2) execution judges will be placed on either side of the springboard / platform by the Referee.

FR 5.3.13.2 The numbering of the execution judge chairs will be clockwise when facing the springboard / platform, namely E 1, E 2 and E 3 (or E 1, E 2) on the left side and E 4, E 5 and E 6 (or E 3, E 4) on the right side.

FR 5.3.13.3 In between the execution judges on either side of the pool, the synchronised judges will be placed in a line.

FR 5.3.13.4 Three (3) synchronised judges will be on the side closest to the springboard / platform competition, and the other two (2) synchronised judges on the opposite side.

FR 5.3.13.5 The numbering of the synchronised judge chairs will start on the left-hand side on the pool with the lowest chair being S 1, and the highest chair on the right-hand side of the pool being S 5.

FR 5.3.13.6 In the synchronised competitions, the synchronised judges closest to the pool edge, shall be seated at a height of not lower than 2.0 metres above the water level.

FR 5.3.13.7 The subsequent heights for the remaining synchronised judges (or additional execution judge) must increase no less than 0.5 metre per seat.

FR 5.3.13.8 There shall be no interference or movement in front of the judge chairs.

FR 5.3.13.9 The above recommendations are shown in *Diving Diagram, Annex 2.1 & Annex 2.2.*

FÉDÉRATION INTERNATIONALE DE NATATION

FR 5.3.14 Dry Land Training Facilities
General Requirements: Dimensions in metres for Dry Land Training Facilities as detailed in *Diving Dry Land Training, Annex 3.1 & Annex 3.2* and *Diving Dry Land Recommended Equipment, Annex 3.3*

FR 5.3.14.1 For the safety and development of divers in the learning of new and more difficult dives, it is strongly recommended that the guidelines presented below be incorporated into the facility and placed adjacent to the competitive diving area /facilities

FR 5.3.14.2 When minimum dimensions are used in B and C a vertical mat or other protective surface should be attached to the appropriate forward and side walls.

FR 5.4 Electronic Officiating Equipment

FR 5.4.1 Electronic Officiating equipment records the judges awards for each diver and determines the final score for each dive as required by Rule D 7

FR 5.4.2 Preferred Equipment must be able to;

FR 5.4.2.1 Record judges awards by whole and half points

FR 5.4.2.2 Be able to display all recorded and calculated information for each diver both before and after each dive

FR 5.4.2.3 Be able to display the scores for all divers before and after each dive

FR 5.4.2.4 Be able to display the rank order and scores for all divers after each round of dives

FR 5.4.2.5 The equipment must provide each judge with an electronic judging device that will permit each judge to enter their award and to see their award on a window on the device. After the referee has accepted the judges awards, all awards shall be displayed on each electronic judging device

FR 5.4.2.6 Judges analysis is to be provided at the conclusion of each event or series

FR 5.4.2.7 The referee must be provided with a monitor on which he/ she will be able to view the awards of all the judges prior to the awards then being displayed on the score board

FÉDÉRATION INTERNATIONALE DE NATATION

FR 5.4.2.8 There is a requirement for a print out of the following information;

1. The draw for the diving order
2. A start list for each session or event
3. A ranking of dives at the end of each round
4. A ranking of dives at the end of each event
5. Judges awards and scores for each diver at the end of each session and event

FR 6 DIVING FACILITIES FOR OLYMPIC GAMES AND WORLD CHAMPIONSHIPS

FR 6.1 General requirements - Dimensions in Metres for Diving Facilities as detailed in *Diving Diagram, Annex 1.1 & Annex 1.2* and 'Field of Play for Olympic Games and World Championships: *Diving Diagram, Annex 2.1 & Annex 2.2.*

FR 6.1.1 For Olympic Games and World Championships FR 5 in total shall apply; however the light intensity at the level of 1 metre above the water surface shall not be less than 1500 lux.

FR 6.2 With regard to dimensions for diving facilities a combination of preferred and minimum measurements found in the "*FINA Dimensions for Diving Facilities, Annex 1.1 & Annex 1.2* table may be used. However measurements less than minimum are not acceptable and may not be used. If the swimming pool and diving well are in the same area, the minimum distance separating the pools shall be of 8 metres, however 10 metres is preferred (see FR 3.16).

FR 6.2.1 The vertical height from the plummet of the diving board and or springboard at rest to the water surface at rest and before water sprays or bubbles are set in motion shall be specified in the Diving Facilities Dimensions table. These measurements should be certified by a surveyor or other qualified officials, appointed or approved by the member of the country in which the pool is situated.

FR 6.3 Line markings for the diving well will consist of 3 lines running the width of the diving well 90 degree angle to the diver facing forward on the springboard or platform. These lines shall be as follows:

Width: minimum 0.2 metre, maximum 0.3 metres
Length: 21.0 metre for 25 metre wide diving well
The distance between the centre points of each lane shall be 2.5 metres
The centre of the first line shall be directly under the plummet of the 3 metre springboard. *See Diving Diagram, Annex 2.1 & Annex 2.2*

FR 6.4 The host facility must provide a trampoline with spotting equipment and a hot tub. It is preferred that there be two trampolines and a dryland area with a springboard and a platform take-off into foam landing pits.

DIAGRAMS FOR DIVING (Total 7)

FÉDÉRATION INTERNATIONALE DE NATATION

FR 7 POOLS FOR WATER POLO

FR 7.1 General requirements: Water Polo Dimensions and Equipment as detailed in Field of Play for Olympic Games and World Championships. *See Water Polo Diagram, Annex 4*

FR 7.2 Field of Play. The distance between the respective goal lines shall be 30.0 metres for games played by men and 25.0 metres for games played by women. The anchor point at the edge of the field of play shall be placed 30cm behind the front of the goal line. The width of the field of play shall be 20.0 metres. The depth of the water shall be consistently not less than 1.8 metres and preferred 2.0m. The overall field of play including the goal area will be 30m x 20m for men and 25m x 20m for women.

FR 7.3 The water temperature shall not be less than 26° plus 1° minus 1° Centigrade.

FR 7.4 The light intensity shall not be less than 600 lux.

FR 7.5 Exception from FR 7.2 may be allowed on the discretion of the federation controlling the match.

FR 7.6 The game secretariat shall be placed at a table behind the referees and at the same height

FR 8 WATER POLO POOLS FOR OLYMPIC GAMES AND WORLD CHAMPIONSHIPS

See Water Polo Diagram, Annex 5

FR 8.1 Exceptions from the requirements in FR 7.2 are not allowed.

FR 8.2 The water temperature shall be as in FR 7.3.

FR 8.3 The light intensity shall not be less than 1500 lux.

FR 8.4 In Olympic Games, World Championships and FINA events fresh water shall be used.

FÉDÉRATION INTERNATIONALE DE NATATION

FR 9 EQUIPMENT FOR WATER POLO POOLS

FR 9.1 Distinctive marks shall be provided on both sides of the field of play to denote the goal lines, lines 2.0 metres and 5.0 metres from that line and half the distance between the goal lines. These markings shall be clearly visible throughout the game. The white marker shall be measured from the anchor point and will be 0.3 metres to line up with the front of the edge of the goal line. This shall be consistent at both ends of the field. The 2 metre red marker shall be measured from the front end of the goal line extending into the field of play. This shall be consistent at both ends of the field of play. The yellow marker shall then extend 3 metres from the 2 metre marker into the field of play. This shall be consistent at both ends of the field of play. The middle section of the field of play will be green and should be 20 metres for the men's game and 15 metres for the women's game. There will be a white marker placed in the middle of the green area to denote the centre of the field. The exclusion zones shall be placed in the two corners on the opposite side of the pool to the official table. They shall be 2 metres in length and shall extend along the goal line.

FR 9.2 Platforms must be provided on both sides of the field of play, which shall be 1 metre in width and 70 cm in height above the water level. These platforms enable the referees to have free way from end to end of the4 field of play. Sufficient space shall also be provided at the goal lines for the Goal Judges. The platforms must be colour coded to meet the specification as shown in the diagram of the field of play Annex 5

FR 9.3 Goals: The goal posts and crossbar must be of wood, metal or synthetic (plastic) with rectangular sections of 0.075 metre, square with the goal line and painted white. The goal posts must be fixed, rigid and perpendicular at each end of the playing space, equal distances from the sides and at least 0.3 metre in front of the ends of the field of play or of any obstruction. Any standing or resting place for the goalkeeper other than the floor of the pool is not permitted.

FR 9.4 The inner sides of the goal posts must be 3.0 metres apart. The underside of the cross bar must be 0.9 metres above the water surface.

FR 9.5 The underside of the crossbar must be 0.9 metre above the water surface when the water is 1.5 metres or more in depth, and 2.4 metres above the bottom of the pool when the depth of the water is less than 1.5 metres.

FR 9.6 Limp nets must be attached to the goal fixtures to enclose the entire pool space securely fastened to the goal posts and crossbar, allowing not less than 0.3m of clear space behind the goal line everywhere within the goal area.

FR 9.7 Automatic Officiating Equipment

DIAGRAM FOR WATER POLO (Total 1)

FÉDÉRATION INTERNATIONALE DE NATATION

FR 10 POOLS FOR SYNCHRONISED SWIMMING

FR 10.1 General requirements: Field of Play for Synchronised Swimming in Olympic Games and World Championships as detailed in: *Synchro Diagram, Annex 6.*

FR 10.1.1 For the figure section of competition two areas each 10.0 metres long by 3.0 metres wide are to be provided. Each area is to be close to a wall of the pool with the 10.0 metre long side parallel to and not greater than 1.5 metres from the pool wall. One of these areas is to be of 3.0 metres minimum depth and the other area is to be of 2.5 metres minimum depth.

FR 10.2 For the routine section of competition a minimum area of 12 meters by 25 meters is required, within an area of which 12 meters by 12 meters must have a minimum depth of 3.0 meters. The depth of the remaining area shall be 2.0 meters minimum.

FR 10.2.1 Delimit in width and length the field of play in the Solo and the Duet with two lanes (maximum width 16 mt length 25).
For the Solo and Duet competition, the field of play may be delimited in width and length.

FR 10.3 Where the water depth is more than 2.0 metres, the depth at the pool wall may be 2.0 metres and then sloped down to reach the general depth at 1.2 metres maximum from the pool wall.

FR 10.4 The areas for figure competition in FR 10.1 can occupy the same area of the pool as that used for routine competition.

FR 10.5 If there are no lane markings as described in FR 2.13, the floor of the pool must be marked with contrasting lines in one direction, following the length of the pool.

FR 10.6 The water must be of sufficient clarity for the bottom of the pool to be visible.

FR 10.7 The water temperature shall not be less than 27° plus 1° minus 1° Centigrade.

FÉDÉRATION INTERNATIONALE DE NATATION

FR 11 POOLS FOR SYNCHRONISED SWIMMING IN OLYMPIC GAMES AND WORLD CHAMPIONSHIPS

FR 11.1 The Field of Play for Synchronised Swimming in Olympic Games and World Championships as detailed in *Syncro Diagram, Annex 6.*

FR 11.1.1 For the routine section of competition at Olympic Games and World Championships a minimum area of 12.0 metres by 30.0 metres is required, within which an area of 12.0 metres by 12.0 metres must have a minimum depth of 3.0 metres. The depth of the remaining area shall be 2.5 metres minimum. The sloped area from 3.0 metres depth to 2.5 metres depth should be over a minimum distance of 8.0 metres.

FR 11.2 The water temperature shall be as in FR 10.7.

FR 11.3 The light intensity shall not be less than 1500 lux.

FR 11.4 Automatic officiating equipment, as listed in FR 12 shall be available.

FR 11.5 Sound equipment and presentation standards as listed in FR 13 shall be available.

FR 11.6 Starting platform is recommended 0.7metres in height but not less than 0.5 metres. *See Synchro Diagram, Annex 6*

FR 11.7 Judges Platform must have tables and chairs and be of a minimum height of 0.6 metres. *See Synchro Diagram, Annex 6*

FR 12 AUTOMATIC OFFICIATING EQUIPMENT

The minimum installation consists of:

FR 12.1 same number of score recorder units as judges (figure: 5 up to 28; routine 5 up to 15)

FR 12.2 the results may only be transferred after confirmation by the referee or appointed official

FR 12.3 result unit (computer) with result recording and backup system. Only FINA approved programmes and systems are allowed.

FR 12.4 print out system for all recorded information, start lists and result lists;

FR 12.5 A judge's evaluation system based on the recorded results (FR 12.3). Only FINA TSSC approved programmes and system are allowed.

FR 12.6 scoreboard control unit with a scoreboard; of a minimum of 10 lines containing 32 digits (or scoreboard as described in Rule FR 4.7.1). The scoreboard must be able to display all recorded information and the running time;

FÉDÉRATION INTERNATIONALE DE NATATION

FR 12.7 for each judge flash cards in case of failure of the electronic system.

FR 13 SOUND EQUIPMENT AND PRESENTATION STANDARDS

The sound equipment should include, at minimum:

FR 13.1 Amplifier-mixer system.

FR 13.2 A sound reproduction system

FR 13.3 High quality microphones and microphone stations for announcements and ceremonies.

FR 13.4 Good quality air speakers of size, number and placement to obtain uniform clear sound to both the field of competition area and audience.

FR 13.5 UW speakers for clear and uniform underwater sound above all interfering noise and at levels acceptable to the competitors.

FR 13.6 Isolation and impedance matching transformer systems for the UW speakers if speakers with metallic shells are used.

FR 13.7 Sound volume (decibel) meter for monitoring music sound levels both above and under water.

FR 13.8 Patch cords for interconnecting equipment properly, speaker extension lines adequate for placing speakers for optimal sound distribution.

FR 13.9 Fusing systems as needed to protect speakers and other equipment.

FR 13.10 Grounding lines to ensure safe grounding of all equipment.

FR 13.11 Safety materials to minimize potential of injury to person or equipment from stepping on or tripping over electrical or speaker lines.

FR 13.12 A stopwatch.

FR 13.13 Tools and meters as needed for initial special hookups and emergency repairs.

FR 13.14 Systems for communication between officials and sound desk.

FR 13.15 A system for monitoring and recording underwater sound continuously.

DIAGRAM FOR SYNCHRONISED SWIMMING (Total 1)

FÉDÉRATION INTERNATIONALE DE NATATION

FR 14. HIGH DIVING

General requirements: Dimensions in metres for all high diving facilities as detailed in *High Diving Facilities Diagram, Annex 4.1 and Annex 4.2,* shall be observed.
In natural surroundings the dimensions can be adjusted to the local situation and approved by FINA Bureau.

The Annex 1 is established by the FINA Facilities Committee in cooperation with the FINA Technical High Diving Commission and approved by the FINA Bureau.

FR 14.1 Platform High Diving

FR 14.1.1 Each platform shall be rigid and horizontal.

FR 14.1.2 The minimum dimensions of the platform shall be:

20m and 27m platforms	2.00m width	4.00m length
5m, 7.5 and 10m platforms	1.50m width	4.00m length

FR 14.1.3 The preferred thickness of the front edge of the platform shall not exceeding 0.16 metre and can be vertical or inclined at an angle not greater than 10° to the vertical inside the plummet line.

FR 14.1.4 The platforms shall be covered in an anti slip material that shall have a tread pattern that provides sufficient traction in wet and dry conditions such that the divers are prevented from slipping when performing dives in all directions.

FR 14.1.5 The front edge of the 20m and 27m platforms shall project at least 3.50 metres beyond the edge of any obstacle. The 5m and 7.5m shall project at least 1.5 metres beyond the edge of any obstacle and the 10m platforms at least 1.50 metres.

FR 14.1.6 The back and sides of each platform shall be surrounded by handrails up to 1m from the edge of the platform with a minimum clearance of 1.8 metres between vertical pairs. The minimum height shall be 1.0 metre and they shall be with at least two horizontal crossbars placed outside the platform beginning 1.00 metre from the front edge of the platform.

FR 14.1.7 Each platform shall be accessible by suitable non-slip stairs (not ladders) as required by the country's building regulations and or health and safety standards that are applicable.

FR 14.1.8 It is preferable that a platform is not constructed directly under any other platform however in circumstance where this cannot be avoided then you must refer to *High Diving Diagram, Annex 4.1*

FÉDÉRATION INTERNATIONALE DE NATATION

FR 14.1.9 The platform shall be a concrete, steel or other rigid material construction as approved by FINA. The longitude and latitude movement/oscillation allowance for the entire 27 metres high tower structure shall be 2.7 cm (1/1000 from 27m). The maximum wind speed for the tower oscillation stability is 54km/hour (banners will affect the stability). The downward flex at the diving end of the platform shall not exceed 2-3mm and approved by the local authority of the area.

FR 14.2 General Requirements

FR 14.2.1 For High Diving platforms designed and constructed after 31st December 2014 the minimum dimensions in metres for high diving facilities as detailed on the "High Diving Facilities Diagram" *(Annex 4.1 & Annex 4.2)* shall prevail, using, as a basic measuring point of reference, the plummet line, which is a vertical line extending through the centre of the front edge of the platform. It is recommended that the preferred dimensions be used for projects considered to have an important status.

FR 14.2.2 The platform height for the 20m platform, must not be less than 20m and not more than 20.5m. The platform height for the 27m platform, must not be less than 27m and not more than 27.5m.

FR 14.2.3 The platforms shall face north in the northern hemisphere and south in the southern hemisphere where possible.

FR 14.2.4 The water temperature shall be not less than 18° Celsius.

FR 14.2.5 A certificate of suitability for use of the venue shall be issued by the appropriate local health and safety authorities. In general terms the certification must also relate to the general water quality for human use.

FR 14.2.6 The surface agitation shall be done by a strong horizontal water spray and the scuba divers must also provide additional splash when necessary. The water spray must not be mounted higher than 1.50m above the water level. The water spray should be strong and provide foamy white water for better visibility for the athletes. The spray or the foam must be strong enough to cover the landing area.

FR 14.2.7 If the average wind speed exceeds 40km per hour then the competition cannot continue until the average wind speed is below 40km.
If lighting is with in 3km of the site then the competition is to be postponed until the lighting subsides or moves away from the venue.

FR 14.3 Security and Emergency Rescue Requirements

FR 14.3.1 For all High Diving competitions and training from 20m or higher medical staff, scuba teams and rescue equipment must be on duty and in position at the venue.

FR 14.3.2 The minimum medical staff shall consist of two (2) doctors, with knowledge in trauma injuries, two to three (2-3) staffed ambulances on site and a designated hospital with an Orthopaedic surgery unit on alert.

FÉDÉRATION INTERNATIONALE DE NATATION

FR 14.3.3 The scuba team consists of two (2) apnea, one (1) scuba diver and 1-2 reserve scuba divers, one (1) scuba captain.

FR 14.3.4 The rescue equipment comprises:
- 2 rescue boats
- 2 spinal boards
- 5 stiff neck collars
- 2 defibrillators
- 2 oxygen tanks
- Blankets
- General first aid kit

FR 14.4 Judges Seating

FR 14.4.1 The judges shall be placed side by side in two lines on one side of the platform with the sunlight in the back or above the judges. Four judges in the back and three in the front, 1m below the back row.

FR 14.4.2 No judge shall be seated behind the front edge of the platform.

FR 14.4.3 The judges shall be seated at a distance of 35-40 metres from the entry point for the 27m platform and 25-30 metres for the 20m platform and their positions elevated by approximately three (3) metres above the water level.

FR 14.5 Electronic Officiating Equipment

FR 14.5.1 Electronic Officiating equipment records the judges awards for each diver and determines the final score for each dive as required by Rule HD 6

FR 14.5.2 Preferred Equipment must be able to:

FR 14.5.2.1 Record judges awards by whole and half points

FR 14.5.2.2 Be able to display all recorded and calculated information for each diver both before and after each dive

FR 14.5.2.3 Be able to display the scores for all divers before and after each dive

FR 14.5.2.4 Be able to display the rank order and scores for all divers after each round of dives

FR 14.5.2.5 The equipment must provide each judge with an electronic judging device that will permit each judge to enter their award and to see their award on a window on the device. After the referee has accepted the judges awards, all awards shall be displayed on each electronic judging device

FÉDÉRATION INTERNATIONALE DE NATATION

FR 14.5.2.6 Judges analysis is to be provided at the conclusion of each event or series

FR 14.5.2.7 The referee must be provided with a monitor on which he/she will be able to view the awards of all the judges prior to the awards then being displayed on the score board

FR 14.5.2.8 There is a requirement for a print out of the following information;

1. The draw for the diving order
2. A start list for each session or event
3. A ranking of dives at the end of each round
4. A ranking of dives at the end of each event
5. Judges awards and scores for each diver at the end of each session and event

DIAGRAMS FOR HIGH DIVING (Total 2)

FIG. 1

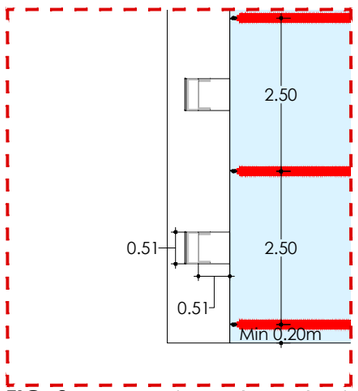

FIG. 3 STARTING PLATFORMS

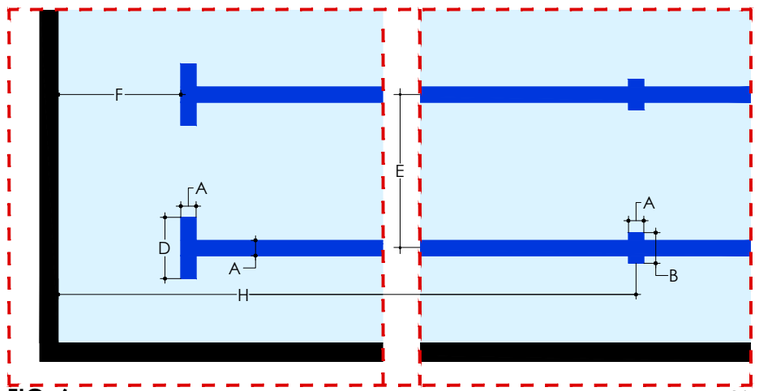

FIG. 6 PLAN LANE MARKINGS

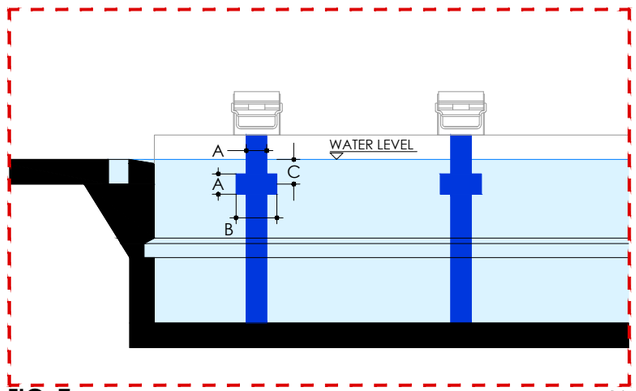

FIG. 7 END WALL LANE MARKINGS

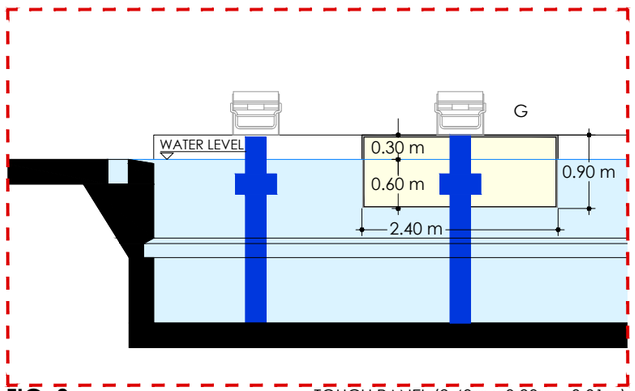

FIG. 8 TOUCH PANEL (2.40m x 0.90m x 0.01m)

FR 3.8 LANE ROPES

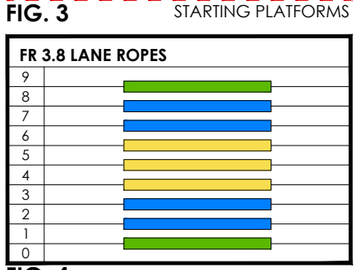

FIG. 4

FR 2.14 FINA LANE MARKINGS		
WIDTH OF LANE MARKINGS, END, LINES, TARGETS	A	0.25m ± 0.05m
LENGTH OF END WALL TARGETS	B	0.50m
DEPTH TO CENTRE OF END WALL TARGETS	C	0.30m
LENGTH OF LANE MARKER CROSS LINE	D	1.00m
WIDTH OF RACING LANES	E	2.50m
DISTANCE FROM END OF LANE LINE TO END WALL	F	2.00m
TOUCH PAD	G	2.40m x 0.90m x 0.01m
DIST. FROM CENTRE OF CROSS LINE TO END WALL	H	15.00m

FIG. 5

50m SWIMMING POOL FOR OLYMPIC GAMES AND WORLD CHAMPIONSHIPS DIAGRAMS AND LANE MARKINGS

Fina Water is Our World

11/20/2017 12:23 PM

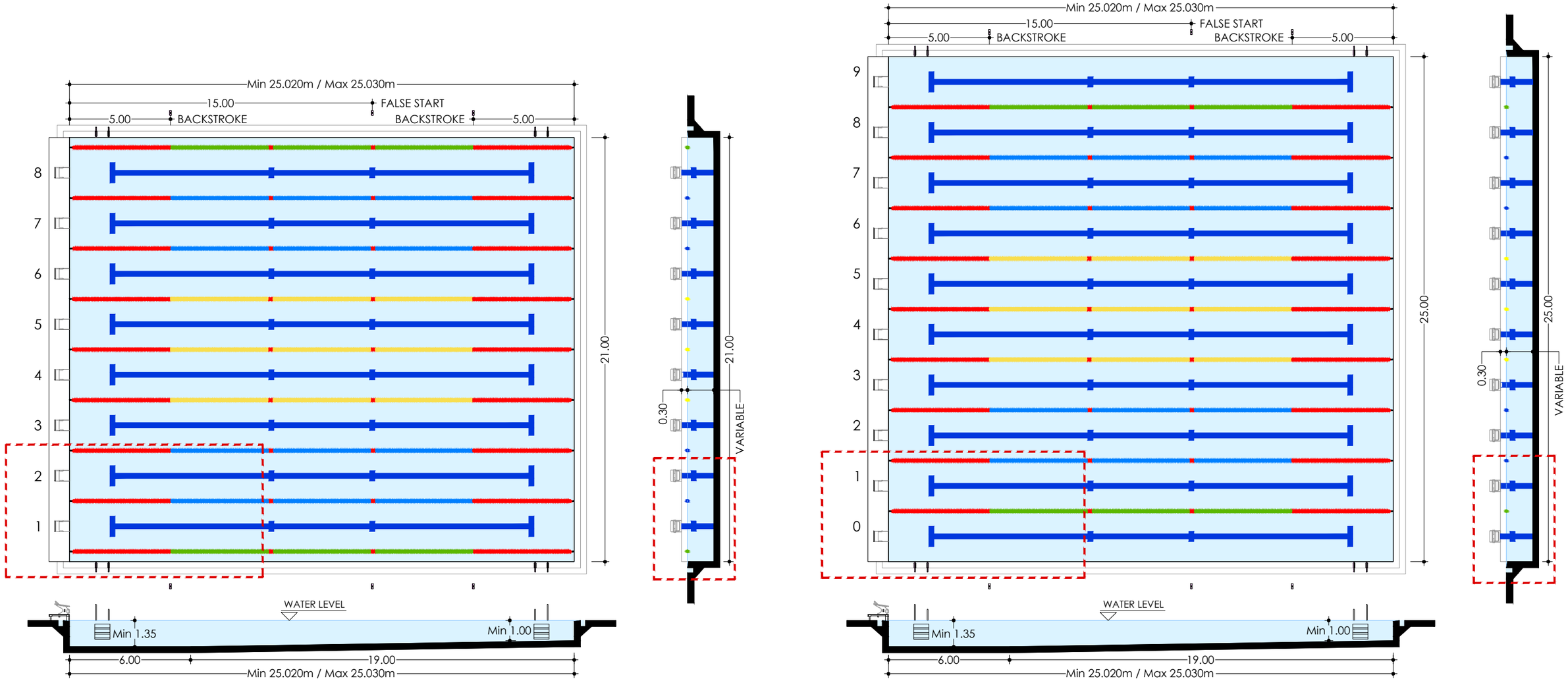

FIG. 2

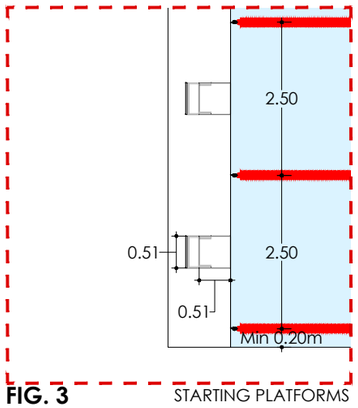

FIG. 3 STARTING PLATFORMS

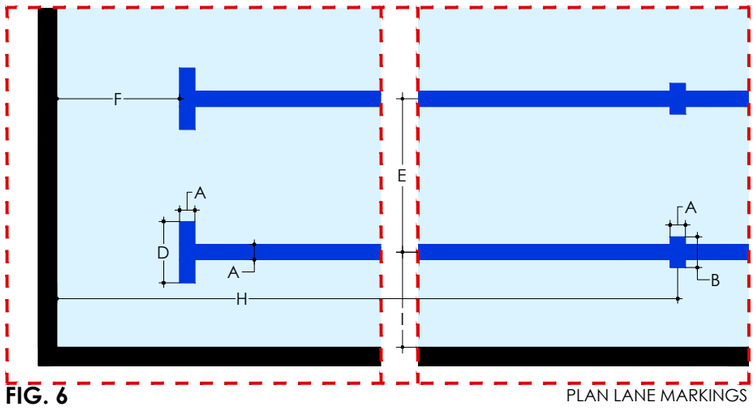

FIG. 6 PLAN LANE MARKINGS

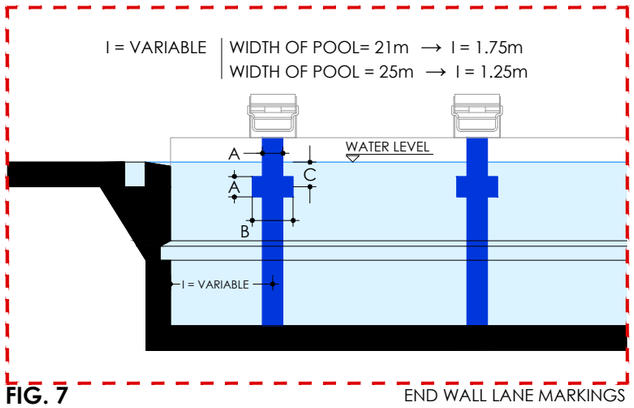

FIG. 7 END WALL LANE MARKINGS

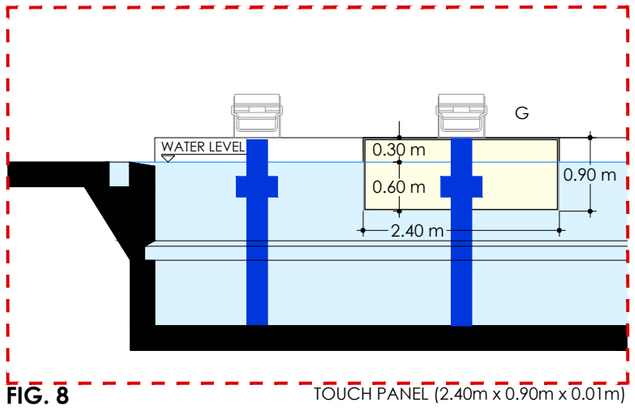

FIG. 8 TOUCH PANEL (2.40m x 0.90m x 0.01m)

FR 3.8 LANE ROPES

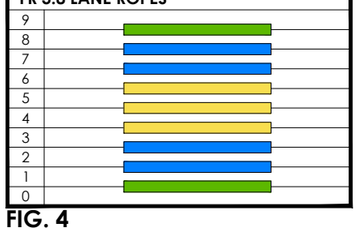

FIG. 4

FR 2.14 FINA LANE MARKINGS

WIDTH OF LANE MARKINGS, END, LINES, TARGETS	A	0.25m ± 0.05m
LENGTH OF END WALL TARGETS	B	0.50m
DEPTH TO CENTRE OF END WALL TARGETS	C	0.30m
LENGTH OF LANE MARKER CROSS LINE	D	1.00m
WIDTH OF RACING LANES	E	2.50m
DISTANCE FROM END OF LANE LINE TO END WALL	F	2.00m
TOUCH PAD	G	2.40m x 0.90m x 0.01m
DIST. FROM CENTRE OF CROSS LINE TO END WALL	H	15.00m

FIG. 5

25m SWIMMING POOL

DIAGRAMS AND LANE MARKINGS

Fina Water is Our World

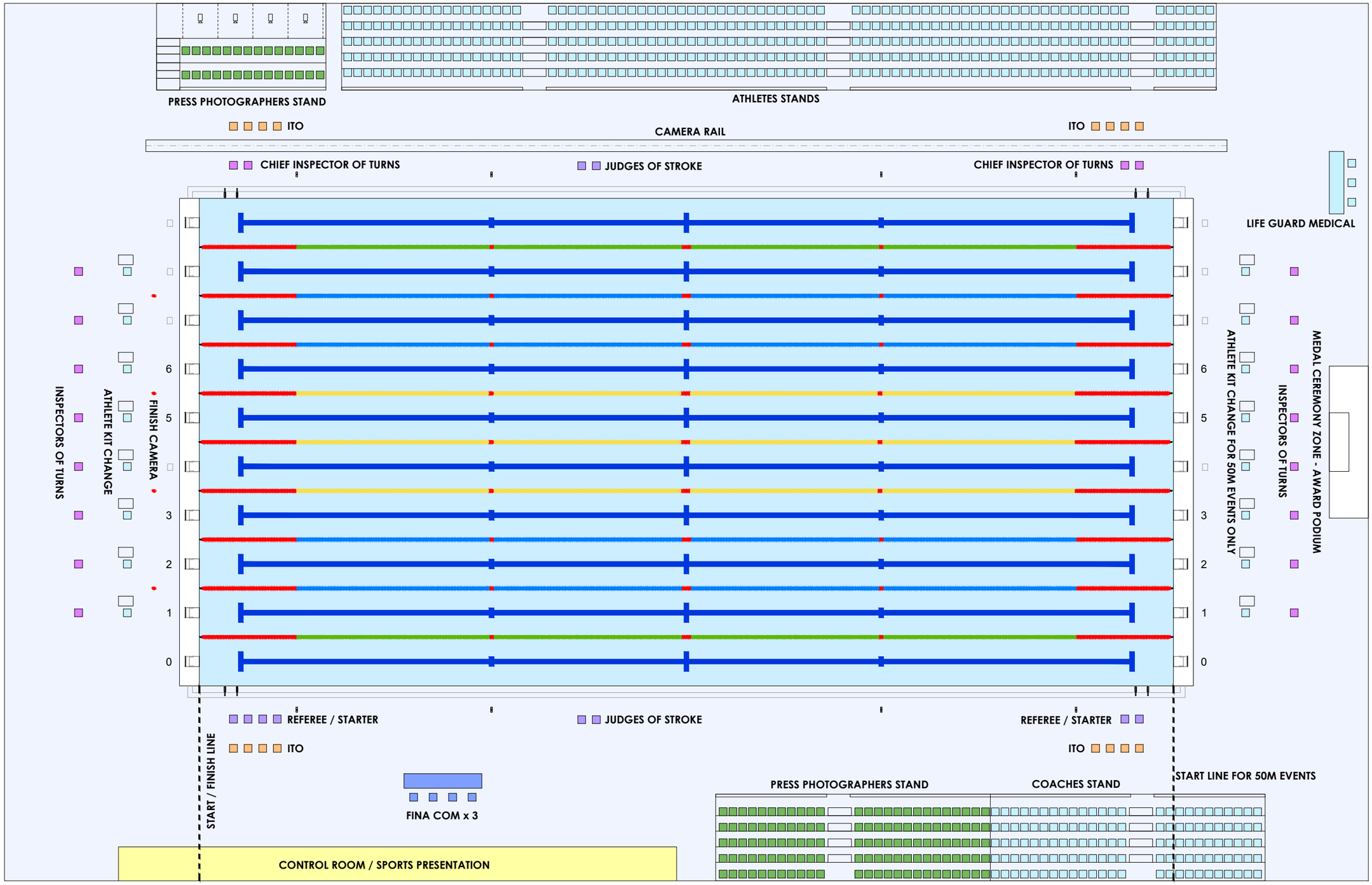

- FINA COMPETITION / REFEREE
- INSPECTORS
- JUDGES
- INTERNATIONAL TECHNICAL OFFICIALS (ITO)
- LIFE GUARD MEDICAL
- ATHLETES STAND
- COACHES STAND
- PRESS PHOTOGRAFERS STAND

FIELD OF PLAY FOR OLYMPIC GAMES AND WORLD CHAMPIONSHIPS SWIMMING

Fina Water is Our World

11/20/2017 12:23 PM

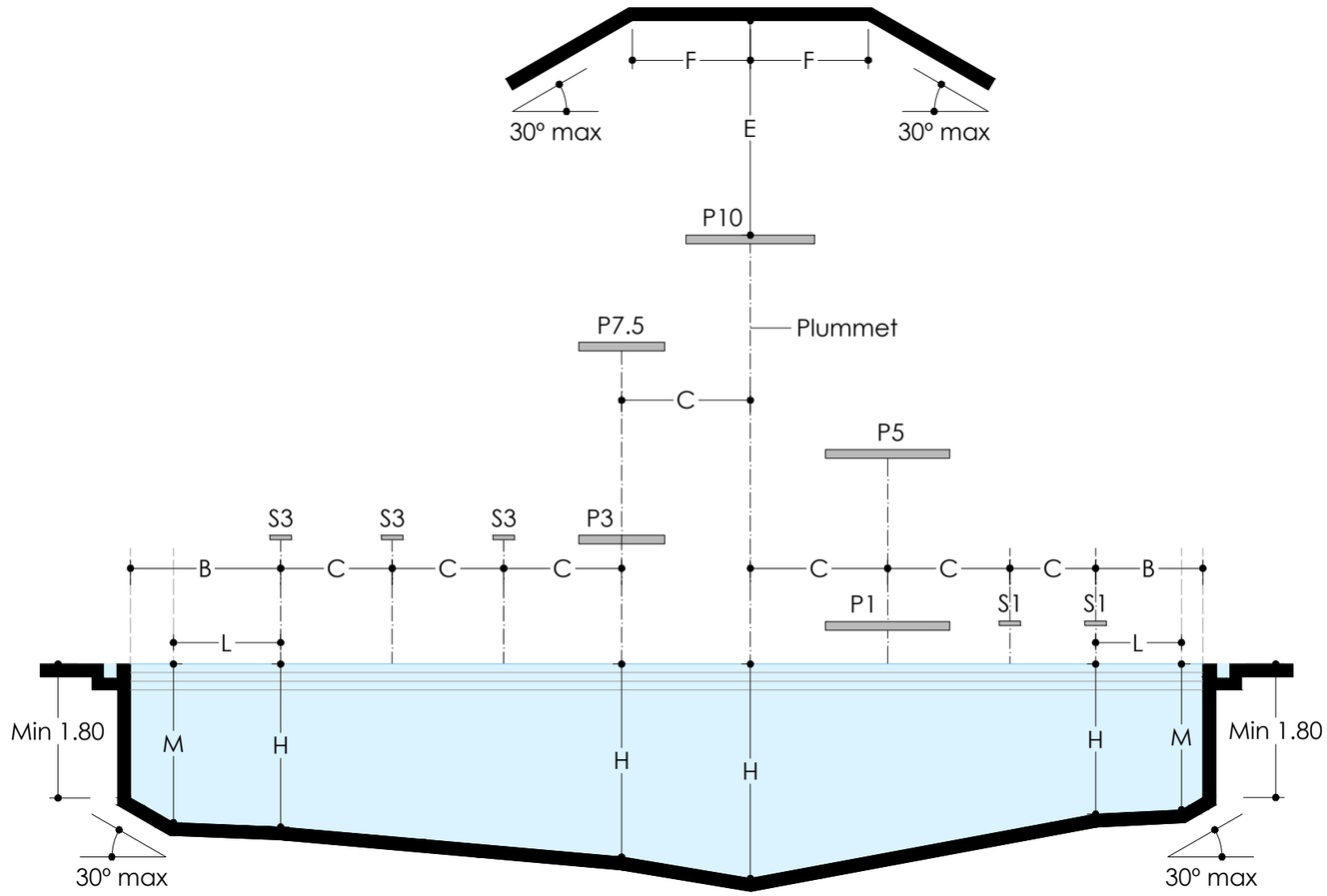

CROSS SECTION

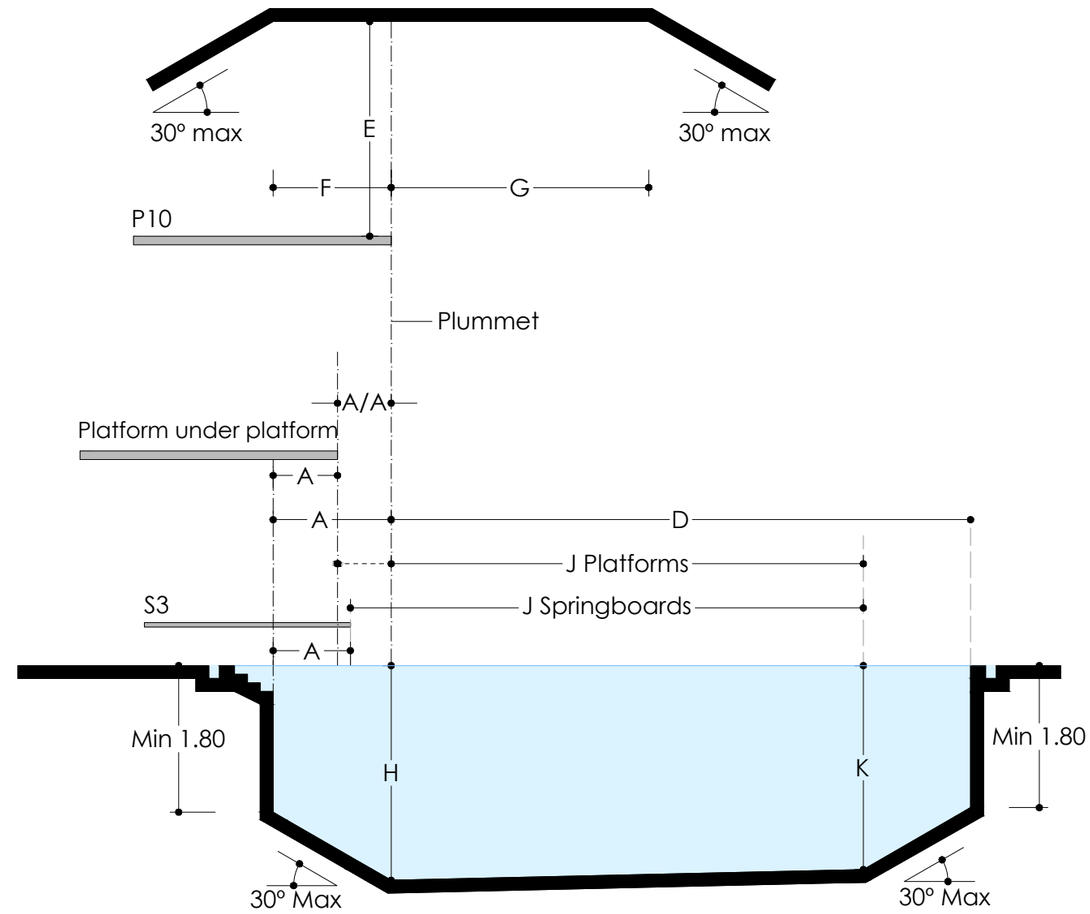

LONGITUDINAL SECTION

HANDRAIL

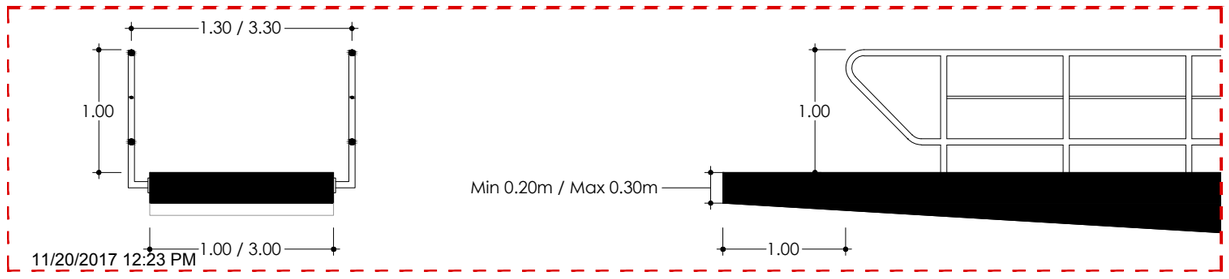

11/20/2017 12:23 PM

DIVING DIAGRAMS
ANNEX 1.1

FR 5.3 GENERAL REQUIREMENTS

	FINA Dimensions for Diving facilities		**SPRINGBOARD**				**PLATFORM**									
			1 metre		**3 metres**		**1 metre**		**3 metres**		**5 metres**		**7.5 metres**		**10 metres**	
	For pools constructed after September, 26th, 2013 (see FR 5.3.1)	Lenght	4.80		4.80		5.00		5.00		6.00		6.00		6.00	
		Width	0.50		0.50		1.00 min. 2.90 preferred		1.00 min. 2.00 preferred		2.90		2.00		3.00	
		Height	1.00		3.00		0.60 min. 1.00 preferred		2.60 min. 3.00 preferred		5.00		7.50		10.00	
			Horiz	Vert	Horiz	Vert	Horiz	Vert	Horiz	Vert	Horiz	Vert	Horiz	Vert	Horiz	Vert
A	From plummet back to pool wall for **CONCRETE PLAFORM**	Designation	A-1		A-3		A-1 pl		A-3 pl		A-5		A-7.5		A-10	
		Minimum	2.22		2.22		0.75		1.25		1.25		1.25		1.50	
		Preferred	2.22		2.22		0.75		1.25		1.25		1.25		1.50	
	From plummet back to pool wall for **PEDESTALS AND METAL STANDS**	Minimum	1.50		1.50											
		Preferred	1.80		1.80											
A/A	From plummet **BACK TO PLATFORM** Plummet directly below	Designation									A/A 5/1		A/A 7.5/3,1		A/A 10/5,3,1	
		Minimum									0.75		0.75		0.75	
		Preferred									1.25		1.25		1.25	
B	From plummet to **POOL WALL AT SIDE**	Designation	B-1		B-3		B-1 pl		B-3 pl		B-5		B-7.5		B-10	
		Minimum	2.50		3.50		2.50		3.00		4.00		4.50		5.75	
		Preferred	2.50		3.50		3.50		3.60		4.50		4.75		5.75	
C	From plummet to **ADJACENT PLUMMET**	Designation	C-1-1		C3-3,3-1		C-1-1 pl		C3-3pl,1pl		C5-3, 5-1		C7.5-5,3,1		C10-7.5,5,3,1	
		Minimum	2.00		2.20		1.85		2.20*		2.85*		2.75*		3.00*	
		Preferred	2.00		2.60		2.15		2.35*		2.85*		2.75*		3.00*	
D	From plummet to **POOL WALL AHEAD**	Designation	D-1		D-3		D-1 pl		D-3 pl		D-5		D-7.5		D-10	
		Minimum	9.00		10.25		8.00		9.50		10.25		11.00		13.50	
		Preferred	9.00		10.25		8.00		9.50		10.25		11.00		13.50	
E	On plummet, from **BOARD TO CEILING**	Designation		E-1		E-3		E-1 pl		E-3 pl		E-5		E-7.5		E-10
		Minimum		5.00		5.00		3.25		3.25		3.25		3.25		4.00
		Preferred		5.00		5.00		3.50		3.50		3.50		3.50		5.00
F	**CLEAR OVERHEAD** behind and each side of plummet	Designation	F-1	E-1	F-3	E-3	F-1 pl	E-1 pl	F-3 pl	E-3 pl	F-5	E-5	F-7.5	E-7.5	F-10	E-10
		Minimum	2.50	5.00	2.50	5.00	2.75	3.25	2.75	3.25	2.75	3.25	2.75	3.25	2.75	4.00
		Preferred	2.50	5.00	2.50	5.00	2.75	3.50	2.75	3.50	2.75	3.50	2.75	3.50	2.75	5.00
G	**CLEAR OVERHEAD** ahead of plummet	Designation	G-1	E-1	G-3	E-3	G-1 pl	E-1 pl	G-3 pl	E-3 pl	G-5	E-5	G-7.5	E-7.5	G-10	E-10
		Minimum	5.00	5.00	5.00	5.00	5.00	3.25	5.00	3.25	5.00	3.25	5.00	3.25	6.00	4.00
		Preferred	5.00	5.00	5.00	5.00	5.00	3.50	5.00	3.50	5.00	3.50	5.00	3.50	6.00	5.00
H	**DEPTH OF WATER** At plummet	Designation		H-1		H-3		H-1 pl		H-3 pl		H-5		H-7.5		H-10
		Minimum		3.40		3.70		3.20		3.50		3.70		4.10		4.50
		Preferred		3.50		3.80		3.30		3.60		3.80		4.50		5.00
J K	**DISTANCE AND DEPTH** ahead of plummet for all stands	Designation	J-1	K-1	J-3	K-3	J-1 pl	K-1 pl	J-3 pl	K-3 pl	J-5	K-5	J-7.5	K-7.5	J-10	K-10
		Minimum	5.00	3.30	6.00	3.60	4.50	3.10	5.50	3.40	6.00	3.60	8.00	4.00	11.00	4.25
		Preferred	5.00	3.40	6.00	3.70	4.50	3.20	5.50	3.50	6.00	3.70	8.00	4.40	11.00	4.75
L M	**DISTANCE AND DEPTH** each side of plummet	Designation	L-1	M-1	L-3	M-3	L-1 pl	M-1 pl	L-3 pl	M-3 pl	L-5	M-5	L-7.5	M-7.5	L-10	M-10
		Minimum	1.50	3.30	2.00	3.60	1.40	3.10	1.80	3.40	3.00	3.60	3.75	4.00	4.50	4.25
		Preferred	2.00	3.40	2.50	3.70	1.90	3.20	2.30	3.50	3.50	3.70	4.50	4.40	5.25	4.75
N	**MAXIMUM SLOPE TO REDUCE DIMENSIONS BEYOND FULL REQUIREMENTS FOR POOL DEPTH and CEILING HEIGHTT**					**30 DEGREES**										

*** Note:** The minimum distance between adjacent plaforms must be at least 0.25 metres.
Note: Dimensions B (plummet to pool wall at side) and C (plummet to adjacent plummet) apply to Platforms with widths as detailed in FR.5.2.5. If Platform widths are increased then B and C shall be increased by half the additional width(s).
Note: The 10 Metre Platform must project 0.25 metres beyond any adjacent platform.
Note: All platforms must project 0.75 metres beyond any platform directly below.
Note: The leading edge of the concrete platforms for springboards must be at least constructed to be directly above the pool wall or beyond.

DIVING DIAGRAMS
ANNEX 1.2

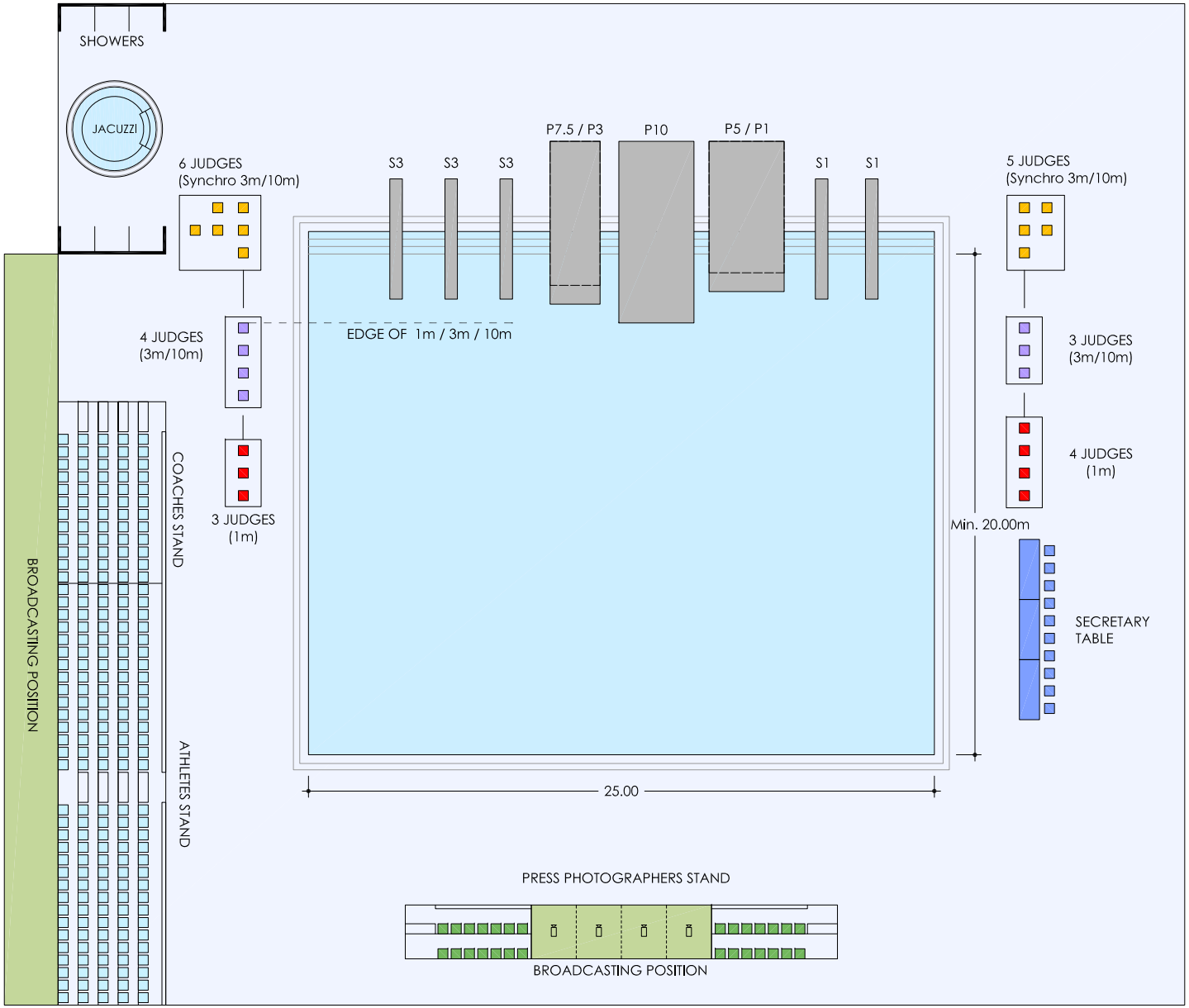

- FINA COMPETITION / REFEREES (Synchro 3m/10m)
- FINA COMPETITION / REFEREES (3m/10m)
- FINA COMPETITION / REFEREES (1m)
- COACHES STAND
- ATHLETES STAND
- PRESS PHOTOGRAPHERS STAND
- BROADCASTING POSITION

FIELD OF PLAY FOR OLYMPIC GAMES AND WORLD CHAMPIONSHIPS DIVING ANNEX 2.1

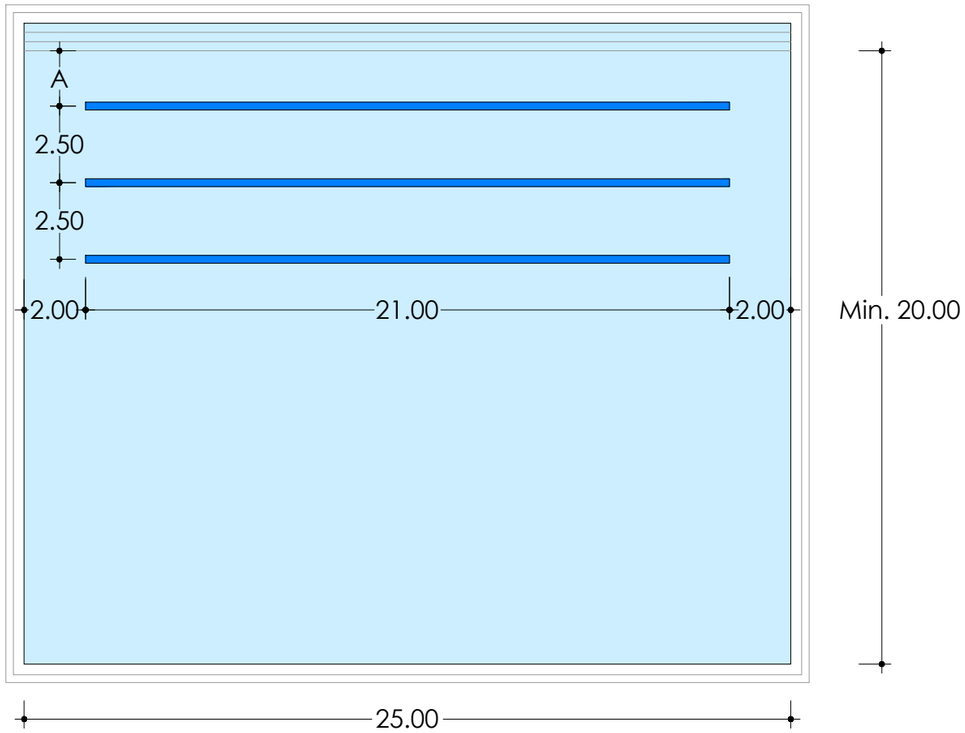

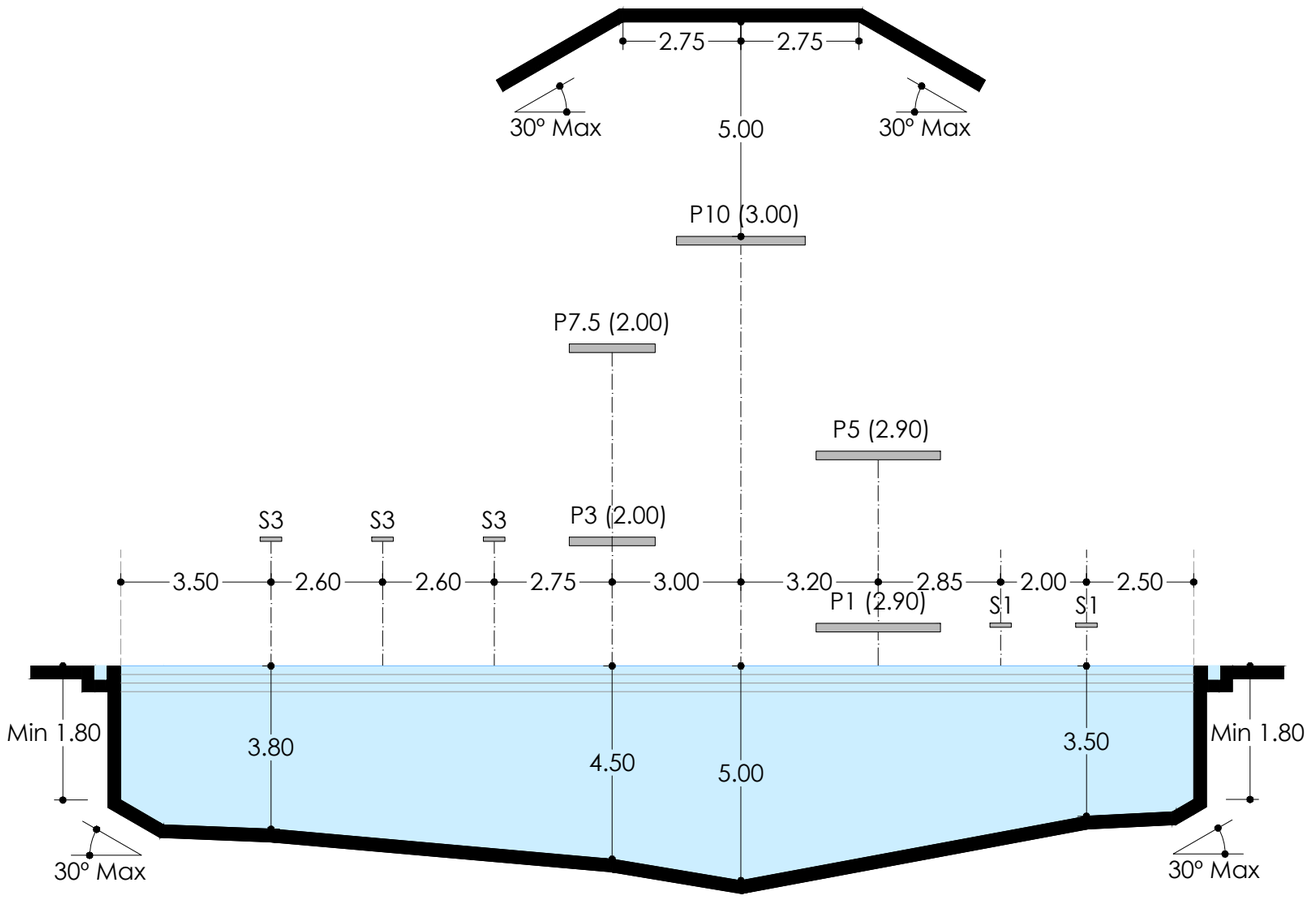

DIVING MARKING LANES: FR 6.3

A = Distance from the end of the wall and plummet of 3 metres springboard.

Dark color. Contrasting color of the bottom of the swimming pool.
Width: Minimum 0.20 metres, maximun 0.30 metres.

FIELD OF PLAY FOR OLYMPIC GAMES AND WORLD CHAMPIONSHIPS
DIVING
ANNEX 2.2

Fina Water is Our World

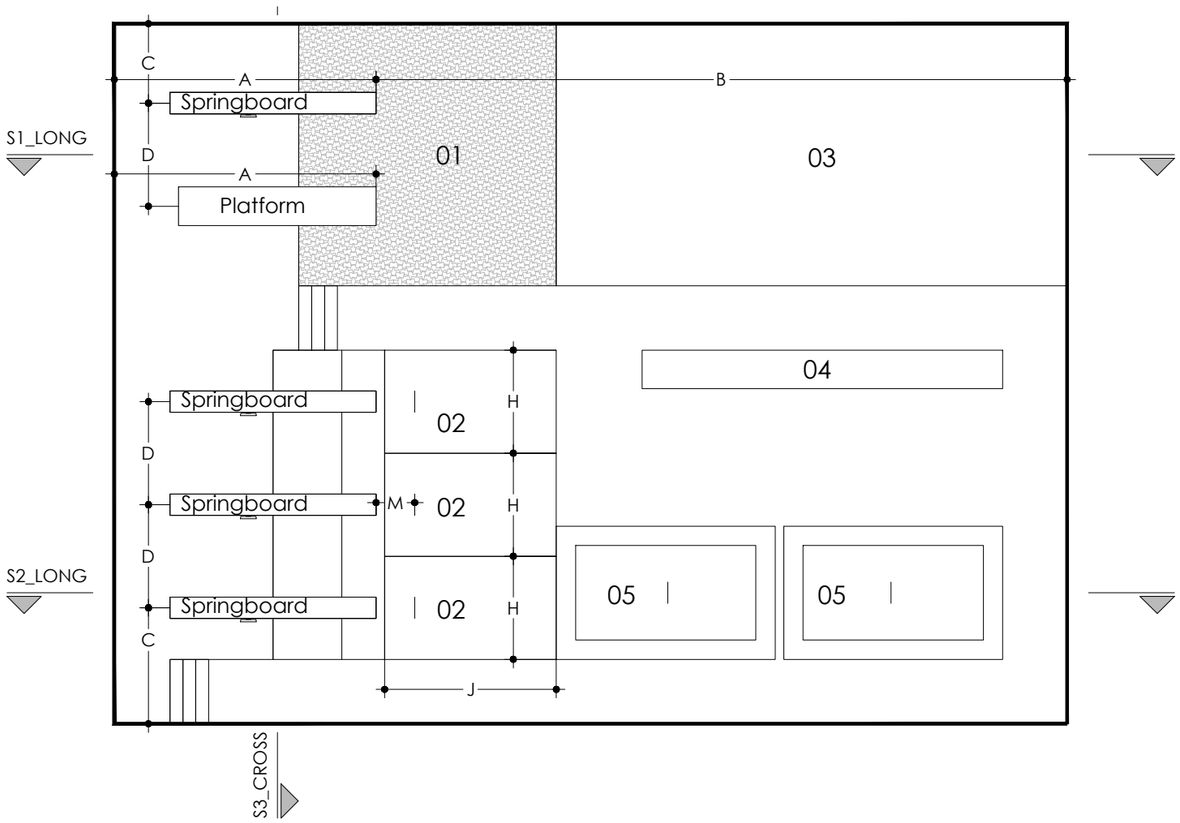

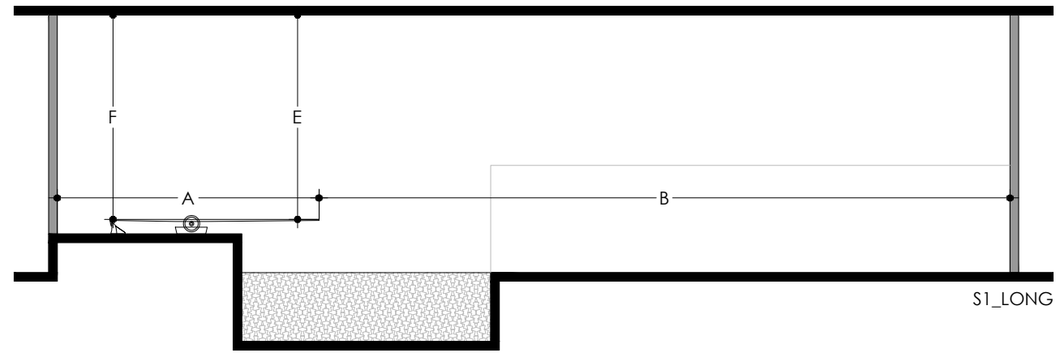

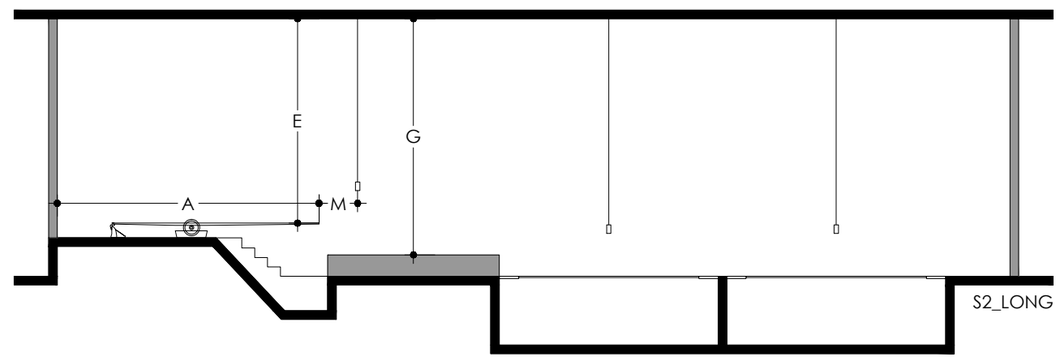

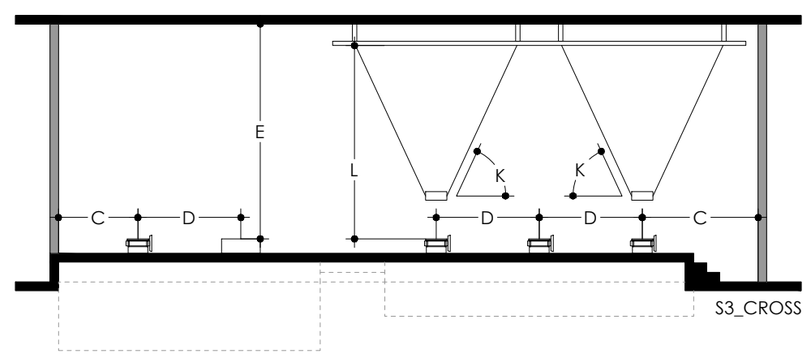

DIVING DRY LAND TRAINING
ANNEX 3.1

DIVING DRY LAND TRAINING DESIGN GUIDELINES

		GOVERNING BODY	FINA			
		LAST DATE UPDATED	10/26/2012		10/26/2012	
			SPRINGBOARD		PLATFORM	
		Length	4.80 m		VARIES	
		Width	0.50 m +/-		VARIES	
		Height	1.24 m		VARIES	
			Horizontal	Vertical	Horizontal	Vertical
A	From plummet **BACK TO BUILDING WALL**	Designation	A-1		A-PL	
		Minimum	4.877 m		VARIES	
		Preferred	6.10 m		INFINITY	
B	From plummet to **BUILDING WALL AT AHEAD**	Designation	B-1		B-PL	
		Minimum	3.66 m		3.66 m	
		Preferred	INFINITY		INFINITY	
C	From plummet to **BUILDING WALL AT SIDE**	Designation	C-1		C-PL	
		Minimum	1.83 m		1.83 m	
		Preferred	INFINITY		INFINITY	
D	From plummet to **ADJACENT PLUMMET**	Designation	D-1		D-PL	
		Minimum	2.00 m		2.00 m	
		Preferred	2.40 m		2.40 m	
E	On plummet from **BOARD TO CEILING**	Designation		E-1		E-PL
		Minimum		5.00 m		2.70 m
		Preferred		6.40 m		6.40 m
F	**OVERHEAD** behind and each side of plummet	Designation	F-1	F-1	F-PL	F-PL
		Minimum	2.50 m	4.50 m	1.50 m	2.70 m
		Preferred	VARIES	6.40 m	VARIES	6.40 m
G	**CLEAR OVERHEAD** ahead of plummet	Designation	G-1	G-1	G-PL	G-PL
		Minimum	5.00 m	4.50 m	1.50 m	2.70 m
		Preferred	VARIES	6.40 m	VARIES	6.40 m
H	**WIDTH OF LANDING PIT** in front of plummet	Designation	H-1		H-PL	
		Minimum	1.83 m		1.50 m	
		Preferred	VARIES		VARIES	
J	**LENGTH OF LANDING PIT** in front of plummet	Designation	J-1		J-PL	
		Minimum	3.66 m		1.50 m	
		Preferred	VARIES		VARIES	
K	**ANGLE OF SPOTING RIG ROPES** *	Designation		K-1	K-PL	
		Minimum		30 DEGREES	30 DEGREES	
		Preferred		35 DEGREES ±	35 DEGREES ±	
L	**HEIGHT OF SPOTING RIG** above diving board or platform	Designation		L-1		L-PL
		Minimum		4.50 m		4.50 m
		Preferred		6.40 m		6.40 m
M	**DISTANCE** in front of plummet to **SPOTING RIG**	Designation	M-1		M-PL	
		Minimum	0.76 m		0.76 m	
		Preferred	0.91 m		0.91 m	

The plummet is the point of measurement from the center front of the springboard.

* Aproximated real angle of spoting rig ropes = 65 DEGREES

USE AND INSTALLATION GUIDELINES FOR DRY LAND TRAINING FACILITIES WITH IN GROUND AND ABOVE GROUND TRAMPOLINES

Installation and use instructions for trampolines and related equipment, such as frame pads, mats, end decks, and spotting systems, shall be provided by the manufacturer and shall specify the minimum safe area dimensions required for each trampoline type and relating their products to center or edge of the trampoline.

Clearance (trampolines): Users should refer to the manufacturer's specifications for all clearance, wich may vary depending upon the manufacturer, the size of the trampoline, the type of bed in place, the type of spotting system in place, if any, and other variables. In any event, adequate space should be provided so that intended users and equipment* will not come into contact with any obstacles during their anticipated use of the equipment.
*i.e., bottoming out a trampoline or Dry land diving board.

Clearance (platforms): These specifications apply to facilities used by FINA level international athletes. Other specifiactions may be appropriate for junior or development programs, so long as adequate space is provided so that intended users and equipment will not come into contact with any obstacle during their anticipated use of the equipment.

DIVING DRY LAND TRAINING EQUIPMENT	
01	BLOCK FOAM LANDING PIT
02	LANDING FOAM PAD
03	GYMNASTICS SPRING FLOOR
04	PADDED PLATFORM BENCH
05	TRAMPOLINE BED

DIVING DRY LAND TRAINING
ANNEX 3.2

RECOMMENDED EQUIPMENT IN DRY LAND TRAINING ROOM

GOVERNING BODY	FINA						
			Number		Suggested dimensions		
1	DIVING BOARDS	The lastest model of Duraflex Springboards mounted on diving stands with moveable fulcrums.	Minimum	2			
			Preferred	4			
2	DIVING BOARD LANDING PADS*	Foam landing pads for Dry land diving boards are located in front of the diving boards.	Minimum	2	Floor	Width	Length
			Preferred	4	120 cm	1.5 m min.	1.5 m min.
3	TRAMPOLINES		Minimum	1			
			Preferred	3			
4	FOAM CRASH MATS		Minimum	2	Height	Width	Length
			Preferred	4	22 cm	2 m	3 m
5	SOMERSAULT BOXES		Minimum	2	Height	Width	Length
			Preferred	4	32 cm	1 m	1 m
6	STRETCHING MATS		Minimum	12	Height	Width	Length
			Preferred	24	12 cm	1 m	2 m
7	LARGE MIRRORS	Should be placed on walls so divers can observer body movements while training on equipment.					
8	VIDEO REPLAY SYSTEM (similar to TIVO)	With at least 2 cameras and 2 monitors. This allows divers to review acrobatic skills performed on springboard and trampoline.					
9	WEIGHT LIFTING EQUIPMENT	Combination of free weights and weight lifting machines.					
10	CARDIO CONDITIONING EQUIPMENT	Treadmills and stationary bicycles.					

* Please note: Foam crash mats may be stacked to a height of 120 cm for the foam landing pads, or Foam pits maybe used instead of landing pads.

DIVING DRY LAND RECOMMENDED EQUIPMENT
ANNEX 3.3

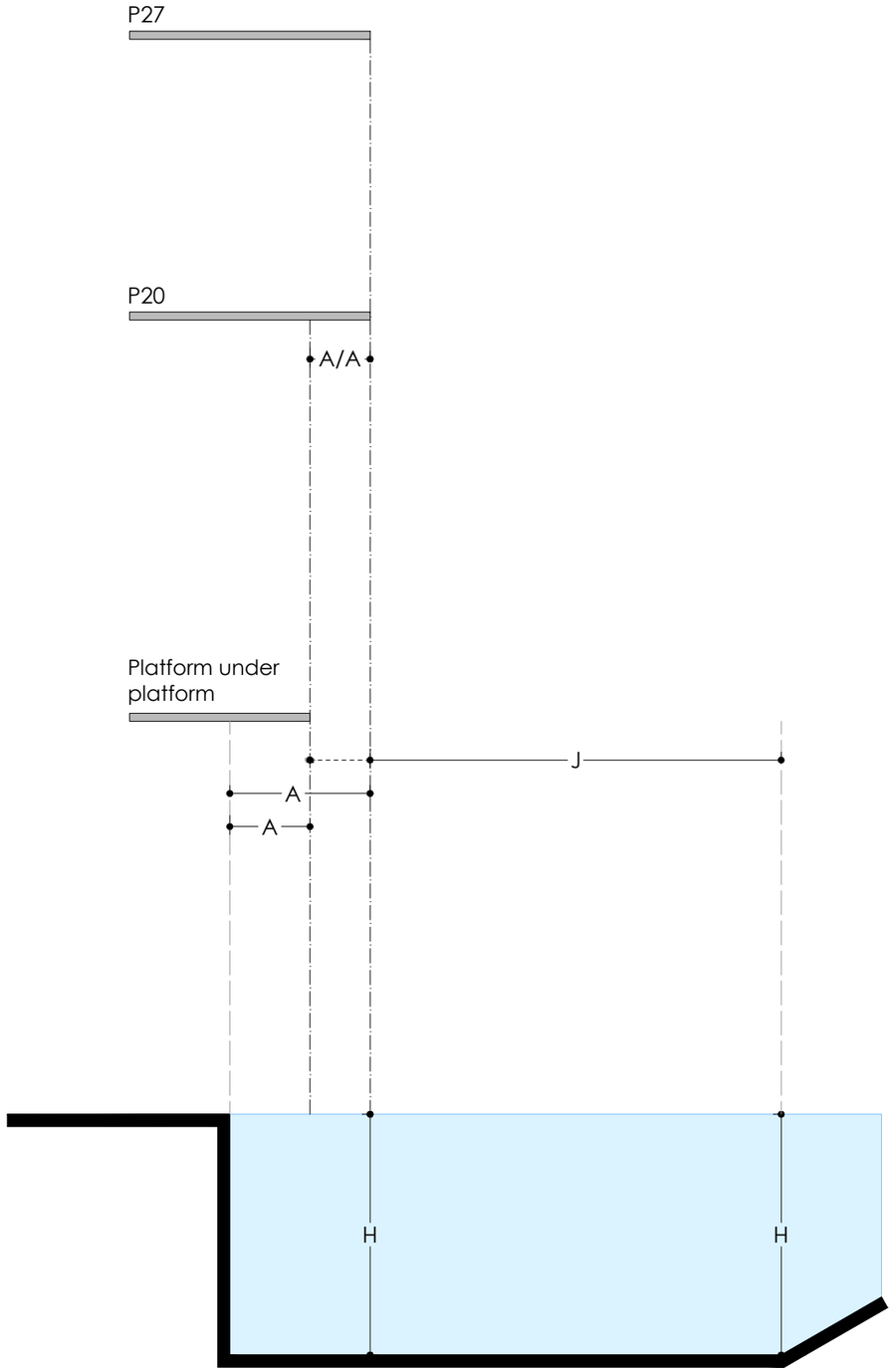

LONGITUDINAL SECTION

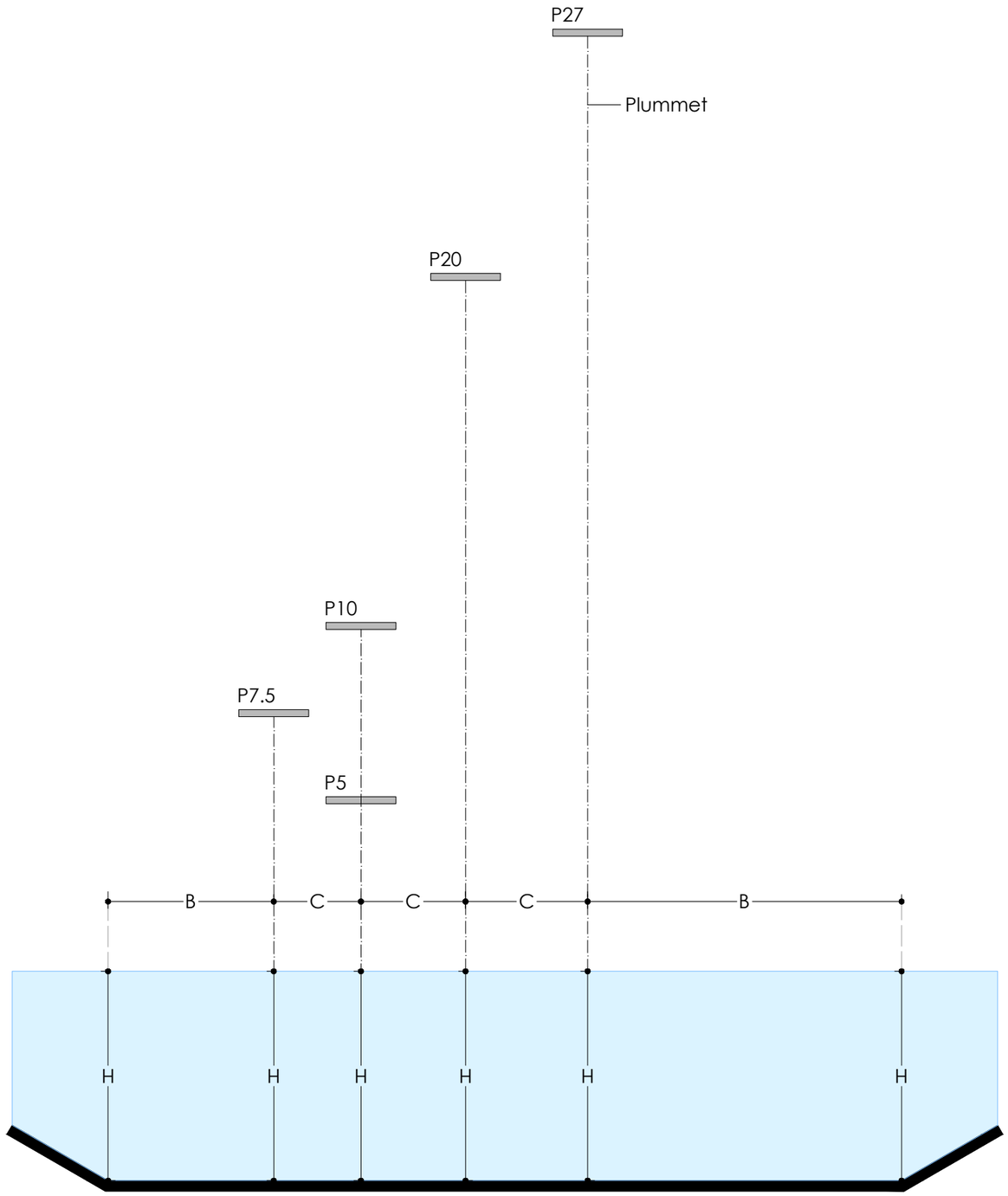

CROSS SECTION

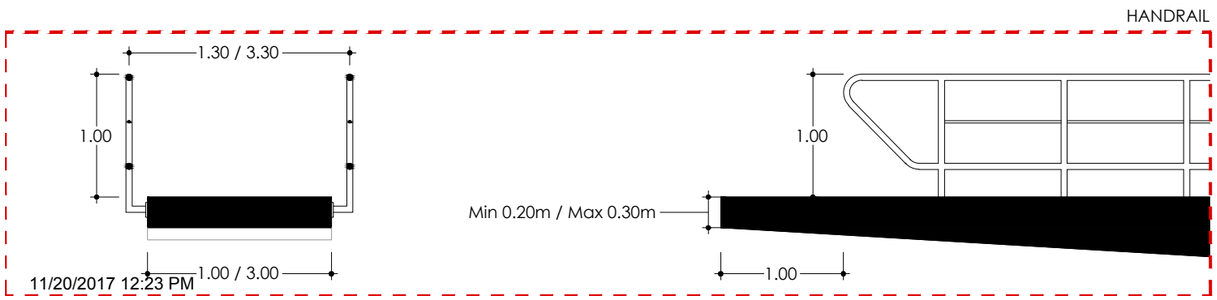

11/20/2017 12:23 PM

HIGH DIVING DIAGRAMS
ANNEX 4.1

FINA Dimensions for High Diving facilities			**PLATFORM**				
			5 metres	**7.5 metres**	**10 metres**	**20 metres**	**27 metres**
	Lenght	Minimum	4.00	4.00	4.00	4.00	4.00
		Preferred	5.00	5.00	6.00	6.00	6.00
	Width	Minimum	1.50	1.50	1.50	2.00	2.00
		Preferred	2.00	2.00	2.00	2.00	2.00
	Height		5.00	7.50	10.00	20.00 +0.50/-0.00	27.00 +0.50/-0.00
A	From plummet **BACK TO OBSTACLE** (pool wall)	Minimum	1.25	1.25	1.50	3.50	3.50
		Preferred	1.25	1.25	1.50	3.50	3.50
A/A	From plummet **BACK TO PLATFORM** Plummet directly below	Minimum	0.75	0.75	0.75	1.00	1.50
		Preferred	1.25	1.25	1.25	1.25	1.50
B	From plummet to obstacle **POOL WALL AT SIDE**	Minimum	4.00	4.50	5.75	9.00	10.00
		Preferred	4.50	4.75	5.75	9.00	10.00
C	From plummet to **ADJACENT PLUMMET**	Minimum	2.50*	2.75*	3.00*	3.50*	3.50*
		Preferred	2.50*	2.75*	3.00*	3.50*	3.50*
H	**DEPTH OF WATER** At plummet	Minimum	6.00	6.00	6.00	6.00	6.00
J	From plummet to obstacle **POOL WALL AHEAD**	Minimum	10.25	11.00	13.50	16.00	18.00
		Preferred	10.25	11.00	13.50	16.00	18.00

Note: The appropiate local authorities must certify that the minimum requirements are observed.
***** The side distance between platforms must not be less than 0.50m

HIGH DIVING DIAGRAMS
ANNEX 4.2

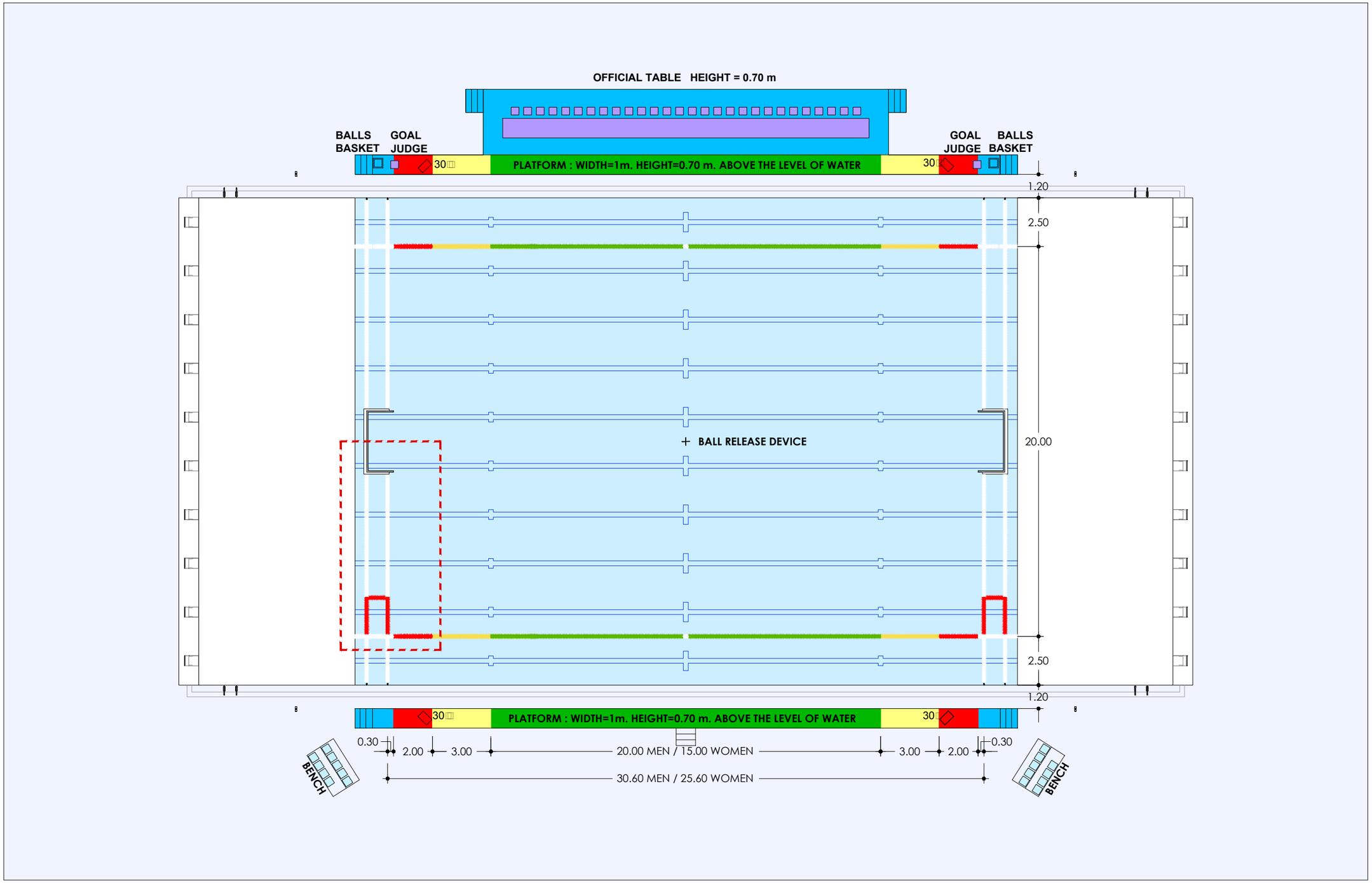

EXCLUDED PLAYERS RE-ENTRY AREA

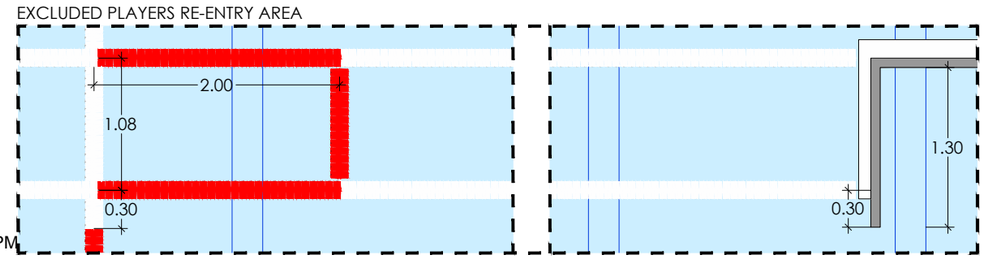

DEPTH OF WATER

MINIMUM: 1.80 metres
PREFERABLY: 2.00 metres

FIELD OF PLAY FOR OLYMPIC GAMES AND WORLD CHAMPIONSHIPS WATER POLO ANNEX 5

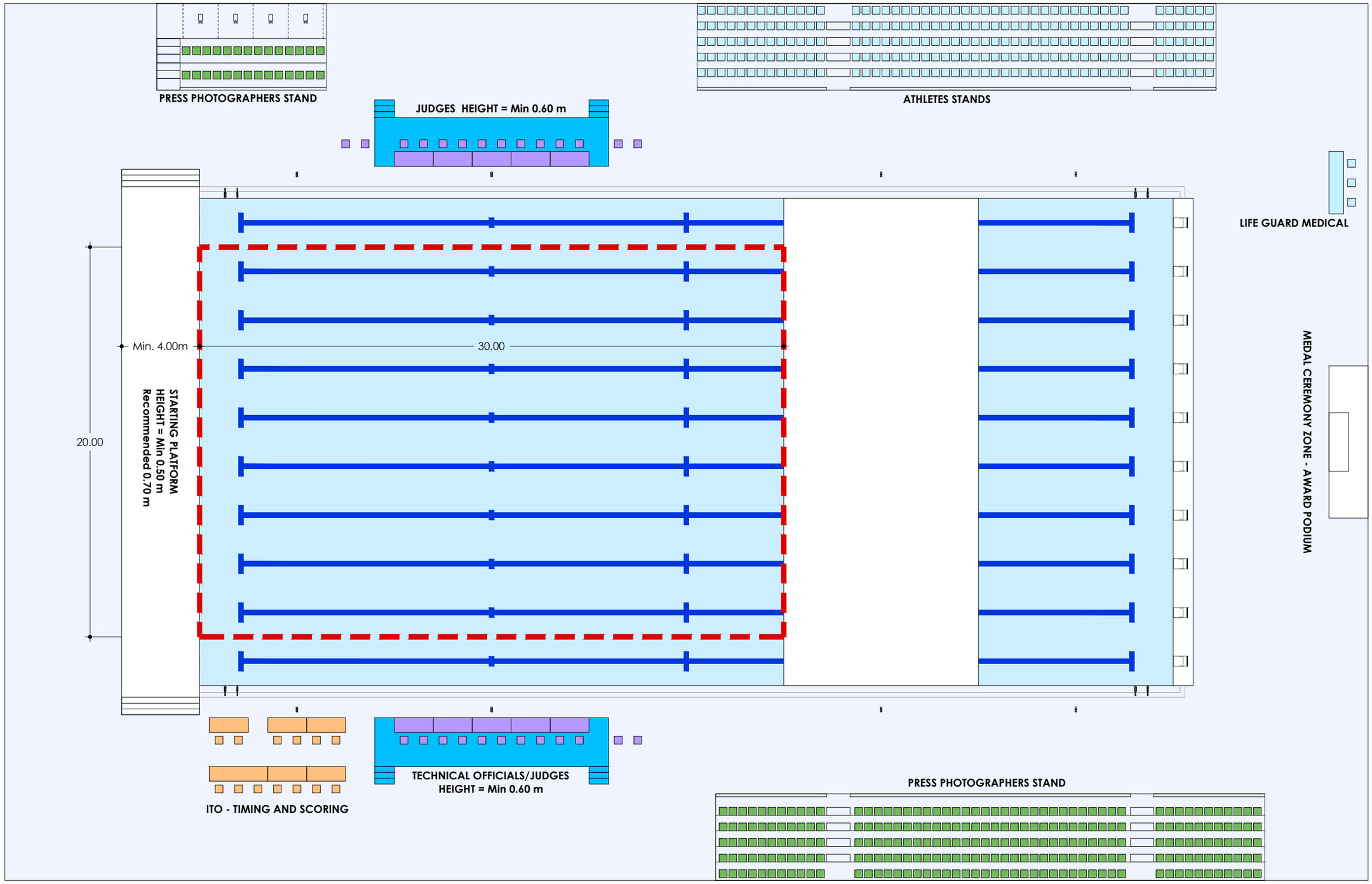

JUDGES

INTERNATIONAL TECHNICAL OFFICIALS TIMING AND SCORING

LIFE GUARD MEDICAL

ATHLETES STAND

PRESS PHOTOGRAFERS STAND

FIELD OF PLAY FOR OLYMPIC GAMES AND WORLD CHAMPIONSHIPS SYNCHRONISED SWIMMING ANNEX 6

Fina Water is Our World

https://www.municode.com/library/fl/fort_lauderdale/codes/code_of_ordinances?nodeId=COOR_CH6AN_ARTIIISETU_DIV2BEARARLIRE&searchText=

ARTICLE III. - SEA TURTLES

DIVISION 1. - GENERALLY

Secs. 6-41—6-44. - Reserved.

DIVISION 2. - BEACH AREA ARTIFICIAL LIGHTING RESTRICTIONS[2]

Footnotes:

--- (**2**) ---

Editor's note— Ord. No. C-03-9, □1, adopted Feb. 18, 2003 , amended the Code by adding provisions designated as a new Art. III, □□6-45.1□ 6-45.9. The provisions of Ord. No. C-03-9 have been included herein as a new Art. III, Div. 2, □□6-45□ 6-53 at the discretion of the editor. See the Code Comparative Table.

Sec. 6-45. - Purpose.

The purpose of this division is to reduce the impacts of artificial coastal lighting on threatened and endangered sea turtles that nest on the beaches of Fort Lauderdale by restricting artificial lighting that disorients turtles hatchlings, causing them to crawl toward land rather than toward the ocean. The restrictions and constraints of this division shall be effective within the incorporated areas of Fort Lauderdale and apply to any coastal lighting activity that has the potential to adversely impact sea turtles within city limits.

(Ord. No. C-03-9, □1, 2-18-03)

Sec. 6-46. - Definitions.

For purposes of this section, the following definitions shall apply:

Artificial light means any point source of light emanating from a device made by humans, including but not limited to incandescent mercury vapor, metal halide, sodium lamps, flashlights, spotlights, streetlights, vehicular lights, construction lights, security lights, bonfires, or any light emanating from any reflective surface of the device.

Beach means that area of unconsolidated material that extends landward from the mean low-water line of the Atlantic Ocean, to the place where there is a marked change in material or physiographic form, or to the line of permanent vegetation.

Bug type bulb means any yellow colored light bulb that is marketed as being specifically treated in such a way so as to reduce the attraction of bugs to the light.

Coastal construction activities means any work or activity that is likely to have a material physical effect on existing coastal conditions or natural shore and inlet processes.

Cumulatively illuminated means illuminated by numerous artificial light sources that as a group illuminate any portion of the beach.

Directly illuminated means illuminated as a result of glowing elements, lamps, globes, or reflectors of an artificial light source which is visible to an observer on the beach.

Dune means a mound or ridge of loose sediments, usually sand-sized, lying landward of the beach and deposited by any natural or artificial mechanism.

Filmed glass means window glass that has been covered with a film such that the material has a shading coefficient of forty-five (45) percent or less, adhesive as an integral part, and has performance claims that are supported by approved testing procedures and documentation.

Floodlight means a reflector-type light fixture that is attached directly to a building and is unshielded.

Frontal dune means the first natural or artificial mound or bluff of sand that is located landward of the beach and that has sufficient vegetation, height, continuity and configuration to offer protective value.

Ground-level barrier means any vegetation, natural feature or artificial structure rising from the ground that prevents beachfront lighting from shining directly onto the beach-dune system.

Hatchling means any species of marine turtle, within or outside of a nest that has recently hatched from an egg.

Indirectly illuminated means illuminated as a result of glowing elements, lamps, globes, or reflectors of an artificial light source that is not visible to an observer on the beach.

Low-profile luminaire means a light fixture set on a base that raises the source of light no higher than forty-eight (48) inches off the ground, and designed in such a way that light is directed downward from a hooded light source.

Marine turtle means any marine-dwelling reptile of the families Cheloniidae or Dermochelyidae found in Florida waters or using the beach as a nesting habitat, including the species: Caretta caretta (loggerhead), Chelonia mydas (green), Dermochelys coriacea (leatherback), Eretmochelys imbricata (hawksbill), and Lepidochelys kempi (Kemp's ridley). For purposes of this section, marine turtle is synonymous with sea turtle.

Nest means an area where marine turtle eggs have been naturally deposited or subsequently relocated.

Nesting season means the period from March 1 through October 31 of each year.

New development means new construction and remodeling of existing structures when such remodeling includes alteration of exterior lighting.

Nighttime means the time period between sunset and sunrise within incorporated Fort Lauderdale.

Person means individuals, firms, associations, joint ventures, partnerships, estates, trusts, syndicates, fiduciaries, corporations, and all other groups or combinations.

Pole lighting means light fixture set on a base or pole that raises the source of the light higher than forty-eight (48) inches off the ground.

Solar screens means screens that are fixed installations and permanently project shade over the entire glass area of the window. The screens must be installed on the outside of the glass and must have a shading coefficient of forty-five (45) percent or less and have performance claims supported by approved testing procedures and documentation.

Tinted glass means any glass treated to achieve an industry-approved inside-to-outside light transmittal value of forty-five (45) percent or less. Such transmittance is limited to the visible spectrum (four hundred (400) to seven hundred (700) nanometers) and is measured as the percentage of light that is transmitted through the glass.

(Ord. No. C-03-9, 1, 2-18-03)

Sec. 6-47. - Prohibited activities disruptive to marine turtles.

The following activities involving direct illumination of portions of the beach are prohibited on the beach at nighttime during the nesting season for the protection of nesting females, nests and hatchlings:

(1) The operation of all motorized vehicles, except emergency and law enforcement vehicles or those permitted on the beach for marine turtle conservation, research or beach maintenance.

(2) The building of campfires or bonfires.

(Ord. No. C-03-9, 1, 2-18-03)

Sec. 6-48. - Exceptions for special events.

Special events at the beach that may have lighting needs shall be permitted during nesting season when granted a special permit by the department of state government with authority to grant such special permits.

(Ord. No. C-03-9, 1, 2-18-03)

Sec. 6-49. - Lighting standards for new development.

It is the policy of the City of Fort Lauderdale that no artificial light shall illuminate any area of the incorporated beaches of Fort Lauderdale, Florida. To meet this intent, building and electrical plans for construction of single-family, townhouse and multi-family dwellings, time share dwellings, hotels, motels, commercial, community facility and other structures, including electrical plans associated with parking lots, parking structures, dune walkovers or other outdoor lighting for real property if lighting associated with such construction or development can be seen from the beach, shall be in compliance with the following:

(1) Exterior artificial light fixtures shall be designed and positioned so that the point source of light or any reflective surface of the light fixture is not directly visible from the beach; areas seaward of the frontal dune are not directly or indirectly illuminated; and areas seaward of the dune are not cumulatively illuminated.

(2) Exterior artificial light fixtures within direct line-of-sight of the beach are considered appropriately designed if they are completely shielded downlight only fixtures, or recessed fixtures having low wattage (i.e., "bug" type bulbs of fifty (50) watts or less) and non-reflective interior surfaces are used. Other fixtures that have appropriate shields, louvers or cut-off features may also be used if in compliance with the requirements of subsection (1) of this section.

(3) All fixtures shall be mounted as low in elevation as possible through use of low-mounted wall fixtures, wall fixtures fitted with hoods so that no light is directly visible from the beach or illuminates the beach, low bollards and ground-level fixtures.

(4) Floodlights, upward-oriented lights, spotlights or search lights for decorative and accent purposes, or used as security lights, are prohibited if they would be directly visible from the beach, or would indirectly or cumulatively illuminate the beach.

(5) Exterior lights used expressly for safety or security purposes shall be limited to the minimum number and configuration required to achieve the safety and security function in compliance with the provisions of crime prevention through environmental design (CPTED). It is preferred that motion detectors are employed to keep lights off except when approached, and that such motion detectors switch lights on for the minimum duration possible.

(6) Pole lights, if used, shall be shielded in such a manner that light will be contained primarily within the area that is landward of the pole, and light shall not be directly visible from the beach.

(7) Lights on balconies and catwalks facing the ocean shall be limited to: low profile luminaries positioned so that no light illuminates or is visible from the beach; wall mounted fixtures fitted with hoods with non-reflective interiors so that no light illuminates the beach or overhead lighting containing bug-type bulbs or other bulbs with fifty (50) watts or less and non-reflective interior surfaces.

(8) Tinted glass shall be installed on all windows and glass doors of single and multi-story structures facing or within line-of-sight of the beach. Shade screens can be substituted for this requirement.

(9) Parking areas and structures shall be designed and located to prevent vehicular headlights from directly or indirectly illuminating the beach. Parking area and parking structure lighting shall be shielded from the beach through the use of shields that direct light away from the beach, and ground-level barriers designed in conformance to the CPTED principals. Such ground-level barriers shall not interfere with marine turtle nesting or hatchling emergence and shall not cause short or long-term damage to the beach/dune system. Entrances and exits to parking structures shall not face the ocean. Surfaces of parking areas shall not contain ground glass or other reflexive material.

(10) Lighting provided for any outdoor recreational feature on the beach (such as tennis court, swimming pool, etc.) shall be shielded to prevent light from directly or indirectly illuminating the beach.

(11) Dune crosswalks, if lighted, shall utilize low profile shielded luminaries.

(12) No roof top advertising sign that is illuminated in any fashion shall be permitted.

(13) Temporary security lights at construction sites shall not be mounted more than fifteen (15) feet above the ground. Illumination from the lights shall be the minimum necessary to assure security, shall not spread beyond the boundary of the property being developed, and in no case shall such lights illuminate the beach.

(Ord. No. C-03-9, 1, 2-18-03)

Sec. 6-50. - Lighting standards for new development that has already been permitted.

The provisions of section 6-49 of this division shall not apply to any structure for which the City of Fort Lauderdale Building Department has issued a building permit prior to the effective date of this division. Said structures shall be governed by the provisions of section 6-51 of this division.

(Ord. No. C-03-9, 1, 2-18-03)

Sec. 6-51. - Lighting standards for existing development.

It is the policy of the City of Fort Lauderdale that no artificial light shall illuminate any area of the incorporated beaches of Fort Lauderdale, Florida. To meet this intent, lighting of existing structures that can be seen from the beach shall be in compliance with the following:

(1) Within six (6) months of the effective date of this division: Internal lamps and other lighting sources in rooms in single and multi-story structures with windows or glass doors facing the ocean shall be relocated so that no lighting shall be seen from the beach at nighttime during nesting season. Lights illuminating dune crosswalks of any areas westward of the dune line shall be turned off at nighttime during nesting season. Lights illuminating any buildings or associated grounds for decorative or recreational purposes shall be shielded or screened such that they are not visible from the beach at nighttime during nesting season, or shall be turned off if shielding or screening cannot be installed within the six-month period.

(2) Within one (1) year of the effective date of this division: Window treatments shall be installed in windows and glass doors in rooms in single and multi-story structures with windows or glass doors facing the beach so that lights are not visible from the beach, or filming in compliance with this division shall be installed on the exterior of all such windows and glass doors, so that internal lights are not visible from the beach. Shade screens can be substituted for this requirement. Existing security lighting shall be screened in such a way that those lights do not illuminate the beach. Existing wall and overhead lighting on balconies and catwalks shall be fitted with screens or hoods that minimize backlighting and reduce their visibility from the beach. Installation of any new security lighting and lighting on balconies and catwalks shall comply with section 6-49 of this division.

(3) Commercial signage facing the ocean or in the line-of-sight of the beach shall not be illuminated during nighttime hours of nesting season within eighteen (18) months of the effective date of this division.

(Ord. No. C-03-9, 1, 2-18-03)

Sec. 6-52. - Publicly owned lighting.

Street lights, existing lighting at parks, publicly owned parking facilities and publicly owned walkways shall be subject to the following:

(1) *Streetlights.* Newly installed street lights shall either be located so that the bulk of illumination will travel away from the beach, and shielding is used to prevent light from illuminating the beach, or shall be low profile luminaries. Existing streetlights shall be equipped with shields that minimize backlighting shall not illuminate the beach and shall reduce visibility from the beach.

(2) *Lighting at parks, publicly owned parking facilities and publicly owned walkways* shall be shielded or shaded during nighttime hours of nesting season so that such lighting does not illuminate the beach and visibility is reduced from the beach. Such shielding or shading shall not create a CPTED problem or safety hazard for pedestrians.

(Ord. No. C-03-9, 1, 2-18-03)

Sec. 6-53. - Penalty.

Violation of the provisions of this division or failure to comply with any of its requirements shall constitute an offense. When it has been determined that a violation has occurred, notice of the violation and an opportunity for a hearing shall be served on the person or persons responsible. Upon refusal, failure or neglect of the person or persons served with a notice of violation to cure the violation, and when the violator or the violator's representatives do not appear at the hearing granted pursuant to this Code or as otherwise provided by law, or when an order finding a violation is entered against the violator, the enforcing agency shall notify the violator, in writing, that an external lighting source causing the violation may be removed by the city within ten (10) business days thereafter, or that a fine may be assessed against the violator, with said fine to begin to be assessed within ten (10) business days thereafter, and to be continuously assessed until the conclusion of nesting season or until the violation is corrected. Costs associated with the removal by the city of external lighting sources causing violations shall be recovered from the person or persons causing the violation, and, if not recovered from the person or persons, shall be placed as a lien against the property and reimbursed to the city at time of sale of the property.

(Ord. No. C-03-9, 1, 2-18-03)

EXHIBIT B
CADD STANDARDS

CITY OF FORT LAUDERDALE
AQUATIC CENTER RENOVATIONS
CITY PROJECT NO. 12315

CITY OF FORT LAUDERDALE PUBLIC WORKS ENGINEERING & ARCHITECTURAL DEPARTMENT CADD SPECIFICATIONS FOR PROJECT DRAWINGS

CITY OF FORT LAUDERDALE

OCTOBER 2015

THIS DOCUMENT WAS PREPARED IN THE CITY OF FORT LAUDERDALE ENGINEERING& ARCHITECTURAL DEPARTMENT BY THE CADD STANDARDS COMMITTEE

THIS DOCUMENT MAY BE DOWNLOADED FROM HTTP://WWW.FORTLAUDERDALE.GOV/ENGINEERING/INDEX.HTM

CONTENTS

1. Purpose 3
2. Version 3
3. Cover Sheets and Title Blocks 3
4. Scales 4
5. X-REFS 4
6. Base Drawing 5
7. Units 6
8. Symbols & Entities 7
9. Paperspace 7
10. Colors and Line weights 7
11. Fonts 8
12. Layers 8
13. General Issues before Submittal 9
14. Miscellaneous 10
15. DWG File Names 10
16. PDF File names 13
17. Standards Specific to Architectural Projects 14

Architectural and Landscaping Text Fonts and Heights 15

1. PURPOSE

The Engineering division provides engineering, architectural, landscaping and project management services; and has put together a set of drafting standards to be used in all computer-aided drawings. The intent is to standardize the way electronic drawing files are produced and to make all drawing files regardless of who produced them, familiar in look and content to all the production staff in the division.

Consultants are encouraged to familiarize themselves with recent existing City project files prior to commencing a project for the City of Fort Lauderdale, in order to achieve true conformity with the way drawing files are to be produced. Below are some of the criteria, **which must be followed**. This document may not cover all circumstances; therefore it is up to the consultant to secure the pertinent information to any situation that may arise in a particular case that is not covered here. All files submitted to the City shall be free of passwords or any other impediment to their free use. The City of Fort Lauderdale's Engineering Division reserves the right to direct a consultant as to the desired manner to proceed when a situation is not addressed here.

2. VERSION

2.1. All drawings shall be produced in an AutoCAD® based product and saved in AutoCAD® 2013 format. Software included but, not limited to:

2.1.1. AutoCAD
2.1.2. AutoCAD LT
2.1.3. AutoCAD Civil 3D
2.1.4. AutoCAD Map 3D
2.1.5. Revit

Please see CADD Coordinator prior to creating drawings with software not listed.

2.2. Drawing files submitted will be 100% AutoCAD (dwg) format and 100% editable.

2.3. The current version of AutoCAD at the time these standards are established is AutoCAD 2016. These standards can only address those issues pertaining to that version of AutoCAD. If a new version of AutoCAD is released prior to revising these standards, projects shall still be submitted in AutoCAD 2013. Once the City upgrades to the newer version of AutoCAD, that version shall be the official version and at the time the City shall determine if submittals in earlier versions are acceptable. All drawing files in a project shall be saved in the same version of AutoCAD.

3. COVER SHEETS AND TITLE BLOCKS

3.1. The City's title block/sheet border symbol shall be used on all drawings except the cover sheet. No modifications shall be made except for values of the attributes present in the block.

3.2. All projects shall have a cover sheet. For the cover sheet, consultants shall use the City's cover sheet symbol. Consultants shall not make any modifications to the city's cover sheet, including renaming the block. The cover sheet shall be inserted at an XYZ scale of 1; and plotted with a final size of 36"X24" at scale 1:1, in PAPERSPACE.

3.3. The standard title block/sheet border shall be inserted in ''paper space" and shall be inserted at an XYZ scale of 1. The viewports can be zoomed to produce the desired final scale within the viewport and will be plotted with a final size of 36X24 at scale 1:1.

3.4. All projects will be made to plot in a standard ARCH D 36" X 24" sheet. The City's standard title block/sheet border SHALL NOT be inserted with dissimilar 'x' and 'y' scales in order to plot in a final size other than the standard.

4. SCALES

4.1. All drawing plan-views and horizontal scale of profiles and cross-sections will be drawn in scale 1:1 in model space, and drawing accuracy shall be 0.01' or better. That is, on a 'DIST' inquiry between consecutive 100-foot stations on a baseline, the result should be 100.00'.

4.2. Details will be drawn 1:1 and then scaled in a paper space window. Certain details need to be drawn with different horizontal and vertical scales for clarity (e.g. typical roadway cross- section). There are however very few instances where it is not practical to draw details to any scale e.g. where drawings are intended to be diagrammatic or schematic; and for those instances only, a scale will not be required. Such drawings will be noted "NOT TO SCALE" or "NO SCALE".

4.3. Plots for projects will be produced at a scale commonly used by the engineering/architectural profession; (e.g. 1" = 20', 1" = 30', 1/4"= 1', etc). Following are examples of unacceptable scales: 1" = 27', 1"=70', etc.

4.4. Vertical scale for cross-sections and profiles will be drawn to a scale in the same ratio as the final plotted product i.e.: if the final plot is horizontal 1"= 20', and the vertical 1"= 2', then the vertical scale is 10 times that of the horizontal.

4.5. Drawing files that are not scale relevant, like index sheet, notes and schedules, shall fill the scale attribute box with the notation "N/A". The notation "NTS or "NOT TO SCALE shall be left to those drawing files that are scalable, but are shown in a scale not measurable with a typical engineering or architectural scale, like details, schematics, etc.

5. EXTERNAL REFERENCES

5.1. Projects shall make use of external reference files (x-refs) to separate different disciplines and sub-consultants or design teams involved.

- ***5.1.1.*** X-ref files shall be limited to one per discipline. There shall be no more than one consultant's work into a single x-ref file i.e.: no design shall be placed directly on a survey file, or electrical design on an architectural file, etc.
  - ***5.1.1.1.*** Within each discipline, all entities shall be drawn in the same file: line work, text, notes, dimensions, leaders, etc. shall all be placed in the same file and space (MODELSPACE). Exception: Revision clouds.
- ***5.1.2.*** In engineering projects, all civil work (demolition, concrete, asphalt, pavers) may be placed in one x-ref per discipline, per consultant, per building (if project is multi building), or at the discretion of the project manager may be further segregated into several x-refs.
- ***5.1.3.*** Larger projects that involve multiple buildings and/or sites may make use of more than 1 x-ref per discipline upon approval of x-ref list by the city.
- ***5.1.4.*** Details, general notes, logos, etc. SHALL not be x-referenced.
- ***5.1.5.*** If during the course of a project design a consultant decides to make use of x-ref for anything other than background support, the final product shall not contain x-ref and layer names with x-ref file name prefixes will not be accepted.

5.2. Survey information shall be in its own x-ref's (see **Base Drawing** section in these standards).

- ***5.2.1.*** The base drawing shall be x-referenced into all x-refs drawings.
- ***5.2.2.*** There shall be no duplicate base information. Footprints to be used as a base for design shall not be duplicated. Example: Two or more footprints of a building drawn side by side in an x-ref.

5.3. Underground utilities (more than one in a project) may be placed in a single x-ref, or each in its own.

- ***5.3.1.*** In underground utilities where a profile is needed, the area shall be in the same x-ref as the plan view for the profiled area.

5.4. Architectural projects shall also be segregated by specialty.

5.5. Electrical, mechanical, foundation, plumbing, roof, etc. shall be either in its own x-ref file, or grouped by sub-consultant, or design group at the discretion of the project manager.

5.6. X-ref files shall have no paths. Project drawing files, which contain x- refs with paths, will not be accepted. Consultants will have to strip all paths from x-refs, or initially x-ref with no paths.

5.7. If an x-ref is "bound" it shall be "insert" and not "bind" type of x-ref thereby no extraneous layer names are created.

5.8. Profiles shall be drawn in the same file as the plan view and all entities of a profile shall remain together in the same file. Line work, grid, all text, notes, leaders, etc. shall be all together.

6. BASE DRAWING

6.1. The base survey shall be made of 4 base files:

- *#####SURV.DWG*
- *#####BSLN.DWG*
- *#####TOPO.DWG*
- *#####UTIL.DWG*

The «#'s" are place-holders for the project number. If utility markings are gathered at a later date from the original survey, then this information can be added to the «#####UTIL.DWG"

6.1.1. The #####SURV.DWG" file shall be the main file and the others shall be XREFED into it. This shall contain any notes which are not location sensitive, and may be moved modified, rotated to accommodate clearer design drawings.

6.1.2. The ####BSLN.DWG shall contain the baselines of survey, including stationing and descriptions of points set, the lot and block, boundaries and relevant information. All survey markers, found or set.

6.1.3. The ####TOPO.DWG shall contain all topography, elevations and other field collected information, not related to horizontal survey control. All survey benchmarks, descriptions and elevations shall be included in this file. Above ground evidence of utilities and any directly measured utility information, such as inverts and pipe sizes shall be included in this file.

6.1.4. The ####UTIL.DWG shall contain the field location of paint marks, stakes or other utility markings, which indicate the presence of an approximate location of underground utilities. Test holes or borings shall also be included. Any other inferred or extrapolated locations shall also be placed in this file.

6.1.5. Any issues not clearly covered in this paragraph shall be referred to the city surveyor for clarification prior to the commencement of any survey work.

6.2. Topographical surveys in AutoCAD format shall not be cut or disseminated into several files in order to create individual sheets.

6.3. Topographic survey files shall not have parts deleted because proposed project does not cover those portions. In that case open a paper space window that will show just the portion of survey needed or use XCLIP.

6.4. Topographic surveys SHALL NOT BE MOVED SPATIALLY within the drawing file, nor shall the consultant or city staff, change the coordinate system to anything other than what was received from survey, UNDER ANY CIRCUMSTANCE. If a consultant furnished the survey it shall be in 'WCS' and the survey shall have the north at 12 o'clock.

6.5. Files of topographic survey shall only have topographic information. These files shall be x-referenced into a new file where the proposed project will be designed.

6.6. The base topographical survey file shall be produced in several files, x-referenced, one within the other. This will make possible to make adjustments to some aspects of the file without the possibility of making changes to the more critical parts of the survey. The following paragraph is a description of what each file holds and a procedural explanation on how to create such a file. It is not intended directly to the designer, but to the survey personnel responsible for creating the survey base file.

6.7. In projects that use a base drawing other than a survey, like an architectural project of plant facility, all disciplines shall make use of a common base drawing, inserted as an x-ref. If there is an update then it is simple to update drawings from all disciplines. No design group shall take the base drawing and modify it in any manner. Through the use of x-referencing, all permitted changes (layer color, line type, etc.) can be accomplished.

7. UNITS

7.1. Engineering projects shall use:

7.1.1. Decimal as linear units at all times.

7.1.2. Angular units shall be surveyor (bearings) units.

7.1.3. Angles shall be measured counter-clockwise and 0 shall be to the east.

7.2. Architectural projects shall use:

7.2.1. Architectural units.

7.2.2. Angular units shall be degrees, minutes, seconds.

7.2.3. Angles shall be measured counterclockwise and 0 shall be to the right (east).

7.2.4. 1" grid, and entities snap to the grid.

7.3. Dimensions shall:

7.3.1. Have a scale factor of 1

7.3.1.1. The scale factor may be changed to 12 or 1/12 when integrating engineering and architectural line work; example site plans, or architectural details displayed in an engineering drawing with decimal units.

7.3.1.2. The scale factor can also be changed to 1/10 in profiles that are drawn 10 times larger vertically than horizontally. Accuracy for plan view design in water, sewer, storm and site electrical projects can be 0.1'.

7.3.2. Precision of 0.01' for decimal units and 1/8 for architectural units, with the default value displayed.

8. SYMBOLS & ENTITIES

8.1. *Blocks will be issued* with the most common symbols used in City projects. From time to time these symbols will be revised and/or new symbols will be added. If for any reason there is a need to create a block either for local use or to keep for future projects, that block shall comply with all City CAD standards.

8.2. Standard issue symbols shall NOT be exploded, renamed or changed in any way. Objects that are repeated throughout and/or that are depicted in an exaggerated scale for clarity (fire hydrants, power poles, catch basins, street lamps, etc.) shall be represented by a symbol. If a symbol CAN be used it SHALL be used.

8.3. Whenever possible, make use of the City's standard symbols and blocks. If a new symbol or block is created, it shall be submitted to the City for approval. Approved symbols and blocks will be made part of the City's symbols library, royalty free. North arrows, graphical scales, logos, location maps and other similar symbols shall be inserted as blocks and left unexploded.

8.4. Consultants may insert their company logo or identification information in the form of a block (symbol) and left unexploded. This block can be placed in all sheets including the cover sheet within the drawing area of each sheet.

8.5. Dimensions shall be associative at all times and left at their default value, and shall NOT be exploded.

8.6. Hatch patterns shall NOT be exploded. Hatch patterns and closed polylines forming the hatch boundary shall be the only entities permitted on hatch layers.

9. PAPERSPACE

9.1. Paper space shall be used for title block/sheet border and viewports. No other entities shall be placed there, especially notes that describe parts of model space entities (notes with a leader). Exceptions: logos, captions, legends, general notes and revision clouds.

9.2. Title block/sheet borders or cover sheets shall NOT be x-refed.

9.3. All drawing entities will be confined within the sheet border. Extents of the drawing files shall be to the edge of title block/sheet border. Multiple layouts are permitted, however only one sheet border per layout is allowed.

10. COLORS AND LINE WEIGHTS

10.1. The City will provide a line weight chart (CTB) to be used.

10.2. Submitted drawings shall make use of one of the city's templates, which have the "Layout'' page setup, configured with the city's configuration files (PC3, CTB and PMP).

10.3. All entities shall be located in their appropriate layer, and have a color and line type "BYLAYER". The ONLY exception to this rule is a Utility XREF drawing (e.g.: 10272XREFUTIL) where the color of the layers continues to be "BYLAYER", but different line types may be used in the same layer to identify different utility types and sizes.

10.4. Colors are not fixed to layers; they are dependent on the discipline. When entities for a particular discipline need to be displayed in drawing files for other disciplines, colors may be setup differently in

order for features to stand out. E.g. Survey drawings will show survey features solid and stand-out. The same survey features will look dimmed in landscape drawings.

10.5. The project manager shall be the final judge of the plotted appearance of the drawings. Consultant shall furnish a printed copy of all drawing files using the City's line weight chart (CTB) file for color approval by the City.

10.6. There are certain entities which make use of custom line types, and that rely on the line type to be identified. If the line type is changed, then the entity loses its identity. Examples are fences: they can make use of a custom line type that identifies them. These entities can be placed in a layer with a different line type and the identity of the fence is preserved. For these cases, it is permissible to make these entities non- ByLayer. There are other examples in electrical drawings.

11. FONTS

11.1. Since fonts are not carried with the drawing files and depends on the computer that is running AutoCAD to find and use these font files. No third party or proprietary fonts shall be used. Drawing files shall not make use of SHAPE files.

11.2. It is possible to automatically substitute fonts not found in the AutoCAD path. The City may (at their discretion) substitute odd fonts with ROMANS.SHX.

12. LAYERS

12.1. The engineer or technician working on the project must determine what color to use from the "LINE WEIGHTS AND GREY SCALE CHART" supplied by the City, in order to get the desired effect, and the City will give the final approval.

12.2. The list of layer names used in all City of Fort Lauderdale projects is a separate document in the form of a MS Excel spreadsheet.

12.3. The City of Fort Lauderdale Engineering Division adheres for the most part (but not totally) to the CAD Layer Guidelines and has adopted the long format; it has up to 16 alphanumeric characters, and is divided in fields or groups.

X-XXXX-XXXX-XXXX

Above is an example of the format, also known as the 1-4-4-4.

12.4. The City will provide a list of layer names to be used. If there is a project for which there are no layer names (which pertain to that discipline), the consultant shall provide a list of proposed layer names based on the layer guidelines, for the City's approval, prior to their use. Once approved by the City, those layer names will become part of the City's list of layer names for all projects thereon or until revised.

12.5. No layer names, other than those in the City's layer name list, will be present in drawing files. Exceptions are those layer names automatically created by AutoCAD; "0", "DEFPOINTS", "ASHADE".

12.6. Layering:

12.6.1. All text, labels, mtext, etc. that is placed in paper space shall be in layers: #-SHBD-TEXT and/or #-SHBD-NOTE;

12.6.2. Consultants' logo shall be placed in layer #-SHBD-LOGO;

12.6.3. Viewports shall be placed in layer: #-SHBD-VPRT;

12.6.4. General line work in paper space like lines to separate areas or viewports, etc. shall be placed in layer: #-SHBD.

12.6.5. All general text shall be placed in a single layer, unless there is a justification for the contrary.

12.6.6. North arrows and graphic scales shall be placed in layer: #-SHBD-NARW.

12.6.7. Leaders shall be placed in a "TEXT" or "NOTE" layer together with the accompanying text.

12.7. Layer names that duplicate the discipline and the major group shall not be used. Examples are: E-ELEC, D-DEMO, H-HVAC, 1-INST, F-FIRE, Q-EQPM.

12.8. Details, sections elevations, do not in general need layer management. Since there is seldom layer manipulation (on, off), the minor group names that distinguish line weight were created. The City uses the discipline, major group designating the object to draw (DETL, SECT, ELEV, etc) and then the minor group designating the line weight. The minor group names are: XFIN, FINE, MEDM, HEVY AND XHEV.

13. GENERAL ISSUES BEFORE SUBMITTAL

13.1. Complete drawing set (DWG) shall be submitted no later than the 60% project submittal for design review and fully compliant with the City's CAD standards' drawing set shall be submitted prior to submittal to the building department for permit. All drawing files shall have all tabs (layouts)zoomed to EXTENTS, prior to any submittal to the City, whether it is the final or a working submittal; XREF drawing files shall be saved with the model tab active and zoomed to EXTENTS. All other drawing files shall be saved with the first paper space layout tab active. All final files shall be fully purged prior to submittal. All files shall be saved and submitted with the current layer set to "0".

13.2. Consultants shall obtain a file number for the project and make sure that the appropriate information is completed in the title block. File numbers can be obtained from the Project Engineer.

13.3. Consultants shall fill in total number of sheets in the tile block, prior to final submittal of drawing files.

13.4. Consultants shall submit a hardcopy (bond, 36" X 24"), DWG and PDF files of the project drawings together with any submittal in electronic format (CD, etc), when making partial and final submittal of drawing files. Prior to all submittals, consultants shall coordinate with the City's file room as to the method of creating PDF files, which will make prints satisfactory to the City. All files submitted to the City shall be free of passwords or any other impediment to their free use. PDFs shall be combined into a single file. Sheets shall be oriented landscape with the title block to the right of the screen, arranged in the order that they are to be printed and the set assembled matching the drawing index order. The PDF binder shall contain bookmarks for all of the sheets, displaying the name of each plot file as described in paragraph 70.

13.5. DWG AutoCAD files shall not be compressed using zip or rar or any other compression scheme when submitting files in an optical media (CD, DVD).

13.6. Submittals via FTP sites are not official submittals; and optical media (CD, DVD)is required.

13.7. When a project is assigned to a consultant who utilizes the collaboration of other sub-consultants, said prime-consultant shall be responsible for all submittals of drawing files and plot files. Said submittals shall be in the form of a single media (1 CD/DVD) to include the entire project.

14. MISCELLANEOUS

14.1. "MTEXT" (multiline text) shall be used in all cases where more than one line of text occurs and where leaders are used.

14.2. These standards are a detailed description of aspects in the creation of drawing files within Engineering. It is by no means the complete description of all the methods used, and it is the consultant's responsibility to alert the City of any point or situation which is not described in these specifications, and which should be addressed. Also if a consultant, after reading these standards and prior to commencing any drafting work, feels that there are points or items in these standards which are not logical, or are onerous to abide by, they should notify the City's Engineering Division at their earliest convenience and their views will be open to discussion.

14.3. This document does not address layer colors or line weights. The consultant shall coordinate with the City's project manager on how these items are treated.

15. DWG FILE NAMES

15.1. All drawing files shall conform to the City of Fort Lauderdale's file naming convention, as described in the following pages. The names shall be accurate to reflect the desired information as per the naming convention. All file names shall be CAPITALIZED.

15.2. The City of Fort Lauderdale Engineering Division has adopted the following file naming convention for project drawings:

15.2.1. The format for single layout drawing files looks like this:

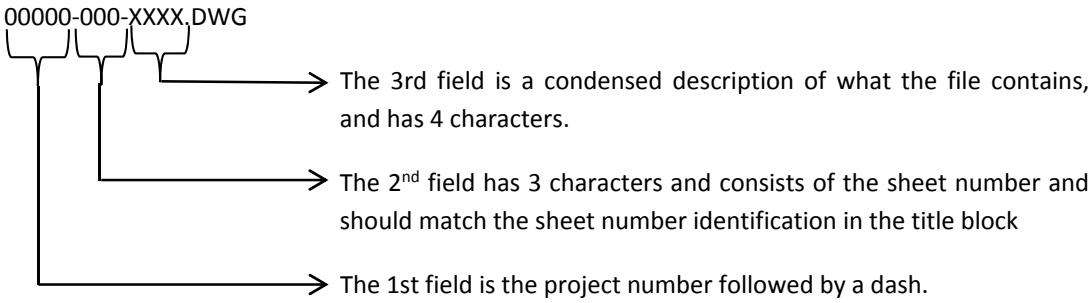

15.2.2. The first field represents the project number.

15.2.3. The second field represents the sheet number and reflects the sheet number as shown in the title block. If sheet numbers have dashes or dots, they shall be stripped: example for C-11, use C11. Drawing sheets shall not be numbered using the ConDoc system (i.e. A1.01, A1.02, A2.01, A2.02).

15.3. The third field is a 4-letter description of what the project drawing file depicts. There is a list of descriptions used in previous projects. Consultant shall check the list prior to creating a new description. The City will need to approve descriptions prior to their use.

15.4. This proposed 3-field format is only for files that contain final drawing with 1 title block/sheet border.

15.5. Examples for this naming format are the following:

- **09585-001-WATR.DWG**
- **10256-021-SEWR.DWG**
- **10855-M10-HVAC.DWG**
- **10325-A01-PLAN.DWG**

15.6. A drawing index should appear on the cover sheet. If there are too many sheets in the set of drawings to fit on the cover sheet, a separate index sheet or sheets shall be included immediately following the cover sheet. When index sheets are utilized the drawing file name shall be 00000-001-INDX.DWG. The first five digits shall be the project number and the next three digits shall be (001), (002), etc. An example is:

- **10325-001-INDX.DWG indicating the first index sheet.**
- **10325-002-INDX.DWG indicating the second index sheet.**

15.7. X-ref files will have a slightly different format. It will have 3 fields, and will look like this: **OOOOOXREFXXXX.DWG**

15.7.1. The 1st field (5 characters) will be the project number; the second field shall be the word XREF". The third field shall be a 4-character description for the file or discipline found in the file. This convention is valid for all XREFS except for the survey XREFS. These shall remain as received by the survey department.

15.7.2. Sheets shall be numbered in a sequential manner and there shall not be any voids in the numbering for any given discipline. All numbering shall start with "1", regardless of the numbering system used, except for the cover sheet which is "0". Example: 1,2,3,4, or A01, A02, A03, BUT NEVER A01, A02, A05.

15.8. The Cover Sheet will follow this drawing naming convention with one small exception. The drawing files will contain additional characters denoting the total number of sheets in a project set, including all disciplines.

15.9. The total number of sheets shall NOT include the cover sheet.

15.10. The format for the coversheet drawing files looks like this:
00000-000-000COVR.DWG

The 3rd field is 7 characters, the first three numerals denoting the total number of sheets in the full set, followed by (COVR) indicating that this is the cover sheet.

The 2nd field consists of three zeros (000)followed by a dash and the total number of sheets for the project without the cover.

The 1st field is the project number followed by a dash.

15.10 For drawing files that contain multiple layouts, the files shall be named as follows:

00000-MULTI-XXXX.DWG

- The 3rd field is a condensed description of what the file contains and has 4 characters.
- The 2nd field consists of the word "MULTI" in uppercase followed by a dash.
- The 1st field is the project number followed by a dash.

Examples for this naming format are the following:

- **XXXXX-MULTI-DETL.DWG: detail sheets.**
- **XXXXX-MULTI-ELEC.DWG: Electrical sheets.**

15.11. Layout Tab names shall be named with the sheet number and an optional description for the sheet content.

15.12. Additional drawing descriptive information may be placed in comments section of the file "properties" of the drawing file. Access this by right- clicking the file and selecting properties then the "summary" tab.

15.13. Names for sheet description to be used as the third field for file names:

BSRV	Boundary Surveys
COVR	Cover Sheets
DEMO	Demolition
DETL	Details
ELEV	Elevations
EQPM	Equipment
FLOR	Floor Plans
GRAD	Paving and grading
INST	Instrumentation
IRRG	Irrigation
KMAP	Key map
LEGN	Legend, symbols and schedule sheets
LITE	Lighting plans
MOTP	Maintenance of traffic plans
NAID	Navigational Aids
NOTE	General Notes
PILE	Piles
PLAN	Plan and profile sheets
PLNT	Plant material
PLUM	Plumbing
POWR	Power
RISR	Riser diagrams
RNWY	Runway
ROAD	Roadway projects incl. Widening, narrowing, special projects
SECT	Cross Sections
SSWR	Sanitary sewer lines
SGNL	Signalization
SIGN	Sign project files
SITE	Site-plans
STRM	Storm water (drainage)
STRP	Pavement Striping
TSRV	Topographic Surveys
TXWY	Taxiway
WALK	Sidewalk project file (asphalt or concrete or other)
WATR	Potable water lines

16. PDF FILE NAMES

Note: Project Manager: Please refer to Memo No. 11-06 for the new procedure for submitting electronic drawings and documents to the Plans Room. The date format YYYYMMDD shall be used when needed.

XXXXX <- Project number
PERMIT <- Sub Folder

16.1. Permit drawing PDF naming:

16.1.1. XXXXX-DRC-BINDER-date.PDF
XXXXX-P&Z-BINDER-date.PDF
XXXXX-PERMIT-BINDER-date.PDF

16.2. Bid drawing PDF naming:

16.2.1. XXXXX-BID-SPEC-date.PDF
XXXXX-BID PLANS-BINDER-date.PDF
XXXXX-BID ADDENDUM1-SPEC-date.PDF
XXXXX-BID ADDENDUM1-BINDER-date.PDF
File as many addendums as needed

16.3. Final Permit Construction plan naming:

16.3.1. XXXXX-CONSTRUCTION-BINDER-date.PDF
XXXXX-REV1-CONSTRUCTION-BINDER-date.PDF
File as many revisions as needed
XXXXX-FIELD CHANGE-BINDER-date.PDF
File as many changes as needed

16.4. AS BUILT –SETS

XXXXX-ASBUILT-BINDER-date.PDF

16.5. DRAWING-SETS

File all the CADD drawings

16.6. ARCHIVES

File all project files from the Z: drive (Project manager to coordinate with CAD Manager)

17. STANDARDS SPECIFIC TO ARCHITECTURAL PROJECTS

17.1. Drawings scales are to be as follows:

17.1.1. LTScale=1

17.1.2. PSLTScale=1=on

17.1.3. Precision=1/8"

17.2. Snap Grid settings:

17.2.1. 1/16"=1'-0" scale to 3/8"=1'-0" scale drawings to be drawn with a maximum snap of 1".

17.2.2. 1/2"=1'-0" scale to 3"=1'-0" scale drawings to be drawn with a maximum snap of 1/8".

17.2.3. All drawings shall be created with SNAP ON.

17.3. Dimensions:

17.3.1. Associative DIMASSOC=1.

17.3.2. Dimensions shall not be forced without prior approval from the CAD Administrator.

17.3.3. Dimstyles have been established in the "CFLSTDARCH2007.dwt" file. Dimstyles are to be used as defined and are not to be modified under any circumstances.

17.3.4. Dimension Round-off:

17.3.4.1. 3/8" scale and less round off to 1/2"

17.3.4.2. 1/2" scale to 3" scale round off to 1/8"

17.3.4.3. Fractions to be diagonal stacked when used in conjunction with a whole number (i.e. 3") and not stacked when used as a stand-alone fraction (3/4"). The text sizes of diagonal stacked fractions are to be 75%. The text sizes of non-stacked fractions are to be 100%.

17.4. Drawings sheets shall be:

17.4.1. Numbered sequentially using the traditional numbering system (i.e. A-1, A-2, A-3).

17.4.2. Drawing sheets shall not be numbered using the ConDoc system (i.e. A1.01, A1.02, A2.01, A2.02). This applies to all engineering disciplines within a set of drawings.

17.5. Text heights – see next page:

ARCHITECTURAL AND LANDSCAPING TEXT FONTS AND HEIGHTS

DRAWING SCALE	TEXT HEIGHT					DIMSTYLE
	Notes (Romans)	Room Names (Romans)	Small Title's (Swis721BT)	Large Title's (Swis721BT)	Title Polyline	
1/16"	16"	24"	48"	64"	8"	ARCH 192
3/32"	10 2/3"	16"	32"	42 2/3"	5 1/3"	ARCH 128
1/8"	8"	12"	24"	32"	4"	ARCH 96
3/16"	5 1/3"	8"	16"	21 1/3"	2 2/3"	ARCH 64
1/4"	4"	6"	12"	16"	2"	ARCH 48
3/8"	2 2/3"	4"	8"	10 2/3"	1 1/3"	ARCH 32
1/2"	2"	3"	6"	8"	1"	ARCH 24
3/4"	1 1/3"	2"	4"	5 1/3"	2/3"	ARCH 16
1"	1"	1 1/2"	3"	4"	1/2"	ARCH 12
1 1/2"	2/3"	1"	2"	2 2/3"	1/3"	ARCH 8
3"	1/3"	1/2"	1"	1 1/3"	1/6"	ARCH 4
Paper Space	1/12"	1/8"	1/4"	1/3"	1/24"	ARCH 1

DRAWING SCALE	TEXT HEIGHT					DIMSTYLE
	Notes (Romans)	Room Names (Romans)	Small Title's (Swis721BT)	Large Title's (Swis721BT)	Title Polyline	
1"□10'	10"	15"	30"	40"	5"	ARCH 120
1"□20'	20"	30"	60"	80"	10"	ARCH 240
1"□30'	30"	45"	90"	120"	25"	ARCH 360
1"□40'	40"	60"	120"	160"	20"	ARCH 480
1"□50'	50"	75"	150"	200"	25"	ARCH 600
1"□60'	60"	90"	180"	240"	30"	ARCH 720
Paper Space	1/12"	1/8"	1/4"	1/3"	1/24"	ARCH 1

5

PRICE PROPOSAL FORM
RFP# 12072-183 DESIGN-BUILD SERVICES FOR
FORT LAUDERDALE AQUATIC CENTER RENOVATION AT 501
SEABREEZE BOULEVARD

BASE BID FORM

Division 1	General Requirements	$
Division 2	Sitework	$
Division 3	Structural Concrete/Foundation	$
Division 3	Foundation Dewatering	$
Division 4	Masonry	$
Division 5	Metals	$
Division 6	Woods and Plastics	$
Division 7	Thermal and Moisture Protection	$
Division 8	Doors and Windows	$
Division 9	Finishes	$
Division 10	Specialties	$
Division 11	Equipment	$
Division 12	Furnishings	$
Division 13	Special Construction - Pools, Equipment, Dive Tower and Platforms	$
Division 21	Fire Protection	$
Division 22	Plumbing	$
Division 23	Heating, Ventilation and Air Conditioning	$
Division 24	Electrical	$
Division 27	IT/Low Voltage System	$
Division 28	Fire Alarm	$
Division 31	Earthwork	$
Division 32	Exterior Improvements	$
	TOTAL DIRECT CONSTRUCTION COST	$
	Design Fee	$
	Overhead and Profit	$
	Payment and Performance Bond	$
	TOTAL CONSTRUCTION COST	$
	Owner Contingency (2%)	$
	Contractor Contingency	$

	TOTAL PROJECT COST	$
	ACCEPTED ALTERNATES	
Alternate 1	Removable shade structure	$
	TOTAL ALTERNATES	$
	GRAND TOTAL - BASE BID + ALTERNATES	$

6

AGREEMENT

Between

CITY OF FORT LAUDERDALE

And

for

DESIGN/BUILD SERVICES

FOR

FORT LAUDERDALE AQUATIC CENTER RENOVATION

This Agreement made and entered into this _____ day of _____, 2016 between the CITY OF FORT LAUDERDALE, FLORIDA, a municipal corporation of the State of Florida, its successors and assigns, hereinafter referred to as "CITY" and _____, a _____ authorized to transact business in Florida, its successors and assigns, hereinafter referred to as "DESIGN/BUILD FIRM."

WITNESSETH, in consideration of the mutual terms and conditions, promises, covenants and payments hereinafter set forth, CITY and DESIGN/BUILD FIRM agree as follows:

ARTICLE 1 – DEFINITIONS AND IDENTIFICATIONS

For the purposes of this Agreement and the various covenants, conditions, terms and provisions which follow, the definitions set forth below are assumed to be true and correct and are agreed upon by the parties.

Agreement - This document, inclusive and including all exhibits and documents that are expressly incorporated by reference.

Applicable Laws - All federal, state, county, and local statutes, codes, laws, rules, regulations, ordinances, orders and standards applicable to the Project and any other such law hereafter enacted, and any rules adopted pursuant thereto, as all such laws may be amended from time to time to perform the Work.

Change Order - A written document ordering a change in the Guaranteed Maximum Price or Contract Time or a material change in the Work.

CITY - The CITY (or Owner) shall mean the City of Fort Lauderdale, a Florida municipal corporation, having its principal offices at 100 North Andrews Avenue, Fort Lauderdale, Florida 33301, which is a party hereto and/or for which this Contract is to be performed. In all respects hereunder, CITY's performance is pursuant to CITY's position as the owner of a construction project. In the event CITY exercises its regulatory authority as a governmental body, the exercise of such regulatory authority and the enforcement of any rules, regulations, laws and ordinances shall be deemed to have occurred pursuant to the CITY's regulatory authority as a governmental body and shall not be attributable in any manner to CITY as a party to this Contract.

City Commission - City Commission shall mean the governing and legislative body of the CITY.

City Manager - City Manager shall mean the Chief Administrative Officer of the CITY.

Construction Documents Phase - The phase in which DESIGN/BUILD FIRM will consult with Project Manager and prepare the Construction Documents for the Project, based upon the Design Criteria Package (DCP), for review and approval of the CITY (including, without limitation, any and all applicable CITY departments) and any applicable regulatory agencies.

Construction Manager - The Construction Manager is the authorized individual or firm which is the representative of the DESIGN/BUILD FIRM, who/which will administer/manage the construction effort on behalf of the DESIGN/BUILD FIRM.

Construction Phase - The phase which constitutes DESIGN/BUILD FIRM's administration of the construction of the Project and all activities necessary for the completion of the Project.

Contract Documents - This Agreement, as approved by the Mayor and City Commission and its exhibits, attachments and forms, any addenda, performance bond and payment bond, plans and specifications (as approved and permitted) as prepared by the DESIGN/BUILD FIRM in accordance with the DCP, Notice of Award, Notice(s) to Proceed, and any and all agreed upon contract and/or design modifications, including but not limited to change orders; Project schedule; a schedule of values, and any additional documents the submission of which is required by this Agreement. When reference is made in the Contract Documents to publications, standards or codes issued by associations or societies, the intent shall be to specify the current or adopted edition of such publication or standard including revision and effect on the date of the issuance of all applicable permits.

Contract Time - The time between the Project Initiation Date specified in the Notice to Proceed and final completion, including any milestone dates thereof, established in the Contract, as may be amended by Change Order.

Contract Price - The Guaranteed Maximum Price agreed to between DESIGN/BUILD FIRM and the CITY. The Contract Price is not subject to increase, except as expressly allowed within the Contract Documents.

Design/Build Firm - _____, its successors and assigns, is the DESIGN/BUILD FIRM selected to perform the Work pursuant to this Agreement, and is the person, firm or corporation liable for the acceptable performance of, and payment of, all legal debts pertaining to the Project. All references in the Contract Documents to third parties under contract or control of DESIGN/BUILD FIRM shall be deemed to be a reference to DESIGN/BUILD FIRM. The DESIGN/BUILD FIRM will be responsible for the provision, installation, and performance of all equipment, materials, services and Work. The DESIGN/BUILD FIRM is in no way relieved of the responsibility for the performance of all equipment furnished.

Design Criteria Package (DCP) - DCP shall mean those certain conceptual plans and specifications and performance oriented drawings or specifications of the Project, as prepared

and sealed by the Design Criteria Professional, and in compliance with the requirements of Section 287.055, Florida Statutes.

Design Criteria Professional - Design Criteria Professional shall mean the individual or entity who/which holds a current certificate as a registered engineer under Chapter 471 to practice engineering and who/which is employed by or retained by the CITY to provide professional services in compliance with the requirements of Section 287.055, Florida Statues, and in connection with the preparation of the DCP who/which shall review and provide recommendations regarding the Construction Documents prepared by the DESIGN/BUILD FIRM for the Project, and evaluate compliance of Project construction with the DCP.

Field Order or Supplemental Instruction - A written order for minor changes or interpretations of the Contract Documents but which does not involve a change in the Guaranteed Maximum Price or Contract Time.

Final Completion - The date certified by the Project Manager that all conditions of the permits and regulatory agencies have been met; all construction, including corrective and punch list work, has been performed; all administrative requirements of the Contract Documents have been completed; and CITY has received from DESIGN/BUILD FIRM all necessary documentation, as deemed required by the CITY including, but not limited to, the following: all final releases of liens, consent of surety, release of claims by DESIGN/BUILD FIRM, correct as-built drawings, a final bill of materials, executed final adjusted Change Orders, final invoice, copies of pertinent test results, correspondence, warranties, guarantees, operational manuals, spare parts, service contracts and tools.

GUARANTEED MAXIMUM PRICE (GMP)- THE MUTUALLY AGREED UPON CONTRACT PRICE TO BE PAID TO THE DESIGN/BUILD FIRM, AND THAT THE DESIGN/BUILD FIRM GUARANTEES NOT TO EXCEED, FOR ALL LABOR, EQUIPMENT, AND MATERIALS TO DESIGN, PERMIT (AS REQUIRED BY THE CONTRACT DOCUMENTS), ADMINISTER, COORDINATE, INSPECT, CONSTRUCT AND INSTALL THE PROJECT WITHIN THE CONTRACT TIME. THE DOLLAR AMOUNT SHALL INCLUDE, BUT NOT BE LIMITED TO ALL PROFIT, OVERHEAD, ON-SITE AND OFF-SITE CONDITIONS (KNOWN AND UNKNOWN) AND ADMINISTRATIVE COSTS. THE GUARANTEED MAXIMUM PRICE IS NOT SUBJECT TO INCREASE EXCEPT AS EXPRESSLY ALLOWED.

Holidays - Those designated non-work days as established by the City Commission of the City of Fort Lauderdale.

Notice to Proceed - One or more written notice(s) to DESIGN/BUILD FIRM issued by the Contract Administrator authorizing the commencement of specified Work.

Plans and Specifications - The official graphic representations of the Project as prepared, signed and sealed by Architect/Engineer and which, upon written approval of CITY, shall become a part of the Contract Documents.

Project - The design/construction project described in the Contract Documents, including the Work described herein in Exhibit A.

Project Manager - The employee of the City, or other designated individual who is herein referred to as the Project Manager, will assume all duties and responsibilities and will have the rights and authorities assigned to the Project Manager in the contract documents in connection with completion of the Work in accordance with this Agreement. The Project Manager, or designee, shall be the authorized agent for the City unless otherwise specified.

Punch List - The City's list of Work yet to be done or be corrected by the DESIGN/BUILD FIRM before the final completion date can be determined by the City.

Shop Drawings - Drawings, diagrams and schedules, and other data specially prepared by the DESIGN/BUILD FIRM or its Subcontractors, sub-Subcontractors, manufacturer, supplier or distributor to illustrate some portion of the Work.

Sub-Consultant - The person or entity who is a registered architect, professional engineer, professional land surveyor, and/or registered landscape architect having a contract with Consultant or DESIGN/BUILD FIRM to provide professional services for the design of the Project, and who is licensed by the State of Florida to provide said services.

Substantial Completion - The date, as certified by the Contract Administrator and the Project Manager that all conditions of the permits and regulatory agencies have been met for the CITY's stated use of the Project, and all construction has been performed therein in accordance with the Contract Documents so CITY can beneficially enjoy, use or occupy and can operate it in all respects for its intended purpose.

Surety - The surety company or individual which is bound by the performance bond and payment bond with and for DESIGN/BUILD FIRM, who is primarily liable, and which surety company or individual is responsible for DESIGN/BUILD FIRM's acceptable performance of the Work under the Contract and for the payment of all debts pertaining thereto in accordance with Section 255.05, Florida Statutes.

Work - The totality of the obligations, including design, permitting, governmental entitlements, site plan approvals and construction and all other services required by the Contract Documents, whether completed or partially completed, including all labor, materials, equipment and services provided to or to be provided by DESIGN/BUILD FIRM to fulfill its obligations.

ARTICLE 2 – GENERAL PROVISIONS

2.1 DESIGN/BUILD FIRM hereby agrees to furnish all of the labor, materials, equipment, Work, services and incidentals necessary to complete the Project, in accordance with the Contract Documents, within the Contract Time and for the Guaranteed Maximum Price.

2.2 Relationship of CITY and DESIGN/BUILD FIRM: The DESIGN/BUILD FIRM accepts the relationship of trust and confidence established between it and the CITY by this Agreement. The DESIGN/BUILD FIRM warrants and represents to CITY that it will furnish its best skill and judgment in performing the Work, and shall always act to further the interest of the CITY in the expeditious completion of the Project at the lowest cost to the CITY, and in strict accordance with the Contract Documents and prudent and customary construction practices.

2.3 By signing this Contract, the DESIGN/BUILD FIRM accepts a fiduciary duty with the CITY and warrants and represents to the CITY that the DESIGN/BUILD FIRM: (a) has all licenses and certifications required by applicable laws; (b) is experienced in all aspects of pre-construction and construction planning for projects similar to the Project; (c) will act in the CITY's highest and best interests in performing the Work; and (d) that no employees or affiliates of the DESIGN/BUILD FIRM, including all Sub-consultants, Subcontractors, and suppliers, at any tier, have been convicted of a public entity crime, fraud, theft, and/or a property damage crime within the preceding thirty-six (36) months from the time this Contract is executed, as required pursuant to Section 287.133, Florida Statutes.

2.4 Intention of Contract Documents: It is the intent of the Contract Documents to describe a functionally complete Project to be designed and constructed in accordance with the Contract Documents. Any Work, design, construction, other professional services, materials or equipment that may reasonably be inferred from the Contract Documents as being required to produce the intended result shall be supplied by the DESIGN/BUILD FIRM, whether or not specifically called for by the Contract Documents. When words, which have a well-known technical or trade meaning are used to describe Work, such words shall be interpreted in accordance with that meaning. Reference to standard specifications, manuals, or codes of any technical society, organization or association, or to the laws or regulations of any governmental authority, whether such reference is specific or by implication, shall mean the latest standard specification, manual, code or laws or regulations in effect at the time of permit issuance. CITY shall have no duties other than those duties and obligations expressly set forth within the Contract Documents.

2.5 DESIGN/BUILD FIRM shall plan, record, and update, at least monthly, the design and construction schedule of the Project. The Project Schedule shall indicate the dates for the

commencement and completion of the various stages of design and construction and shall be revised at least monthly and as required by the conditions of the Work. The Project Schedule shall encompass all of the work of all professions and trades necessary for the construction of the Project and shall be sufficiently complete and comprehensive to enable progress to be monitored on a weekly basis. DESIGN/BUILD FIRM shall be responsible to have available to it all materials, supplies, and appropriate personnel, trades, etc., necessary to complete the Work in accordance with the Project Schedule.

ARTICLE 3 – PROJECT MANAGER

3.1 The Project Manager is hereby designed by the City as Thomas Green, Senior Project Manager, whose address is 914 NW 6TH Street, Suite 200, Fort Lauderdale, Florida 33311. The Project Manager will assume all duties and responsibilities and will have the rights and authority assigned to the Project Manager in the Contract Documents in connection with completion of the Work in accordance with this Agreement.

ARTICLE 4 – CONTRACT DOCUMENTS

4.1 The Contract Documents shall be followed as to Work, Materials and dimensions except with the Project Manager may authorize, in his/her sole discretion, and in writing, an exception.

4.2 Dimensions given in figures are to hold preference over scaled measurements from the drawings; however, all discrepancies shall be decided upon by the Consultant, with concurrent written notice to Contract Administrator and Project Manager. DESIGN/BUILD FIRM shall not proceed when in doubt as to any dimension or measurement but shall seek clarification from the Consultant, with concurrent written notice to Project Manager.

4.3 DESIGN/BUILD FIRM shall maintain two (2) copies of the Contract Documents, one of which shall be preserved and always kept accessible at the site for the Project Manager, and/or authorized representatives.

4.4 The Contract Documents shall have the following order of precedence, beginning with the most important:

A. This Agreement (Contract) and all exhibits, addendums, and amendments thereto;

B. Change Orders (to the extent permitted under this Agreement);

C. The Specifications, as approved and permitted;

D. The Plans, as approved and permitted;

E. The DCP; and

F. CPM Project Schedule and Schedule of values.

ARTICLE 5 – SCOPE OF WORK

5.1 DESIGN/BUILD FIRM agrees to complete the Project generally described by the DCP, including, drawings and specifications; job site inspection; administration of construction, engineering, architecture, landscape architecture, and land surveying services, labor, materials, equipment and other services necessary to perform all of the Work described in the Contract Documents, to be prepared by the DESIGN/BUILD FIRM, including drawings and addenda thereto for the construction of the Project; the Project shall be construed in accordance with the requirements and provisions of said Contract Documents and for the Guaranteed Maximum Price.

5.2 DESIGN/BUILD FIRM agrees to meet with the Project Manager or his/her respective designees at reasonable times and with reasonable notice.

5.3 Prior to the Final Completion of construction services under this Agreement, and as a condition precedent to final payment, there shall be established a record set of plans on reproducible vellum and a record set of Specifications, both of which shall bear the written approvals of the DESIGN/BUILD FIRM and Contract Administrator. Such approval shall be indicated by the written signature of both parties. In addition, there shall be established electronic copies on USB Flash Drive (Thumb Drive) of the record set plans, non-compressed, formatted in the latest version of AutoCAD and of the record set of Specifications.

5.4 DESIGN/BUILD FIRM herein represents that Construction Manager, at a minimum, will provide the following services:

5.4.1 At least five (5) days prior to the commencement of the construction phase of the Project, the DESIGN/BUILD FIRM will identify and provide the qualifications of a suitably qualified and experienced Construction Manager who will be on site full time at the Project.

5.4.2 DESIGN/BUILD FIRM will use reasonable efforts to have the same Construction Manager on the Project, full time, to its conclusion, and any new representative

will first be approved in writing by Contract Administrator before permanent assignment. Approval shall not be unreasonably withheld.

5.4.3 The Construction Manager will conduct weekly meetings with the Contractor and its Subcontractors at regular times, as previously agreed upon and approved by the Project Manager, and shall issue weekly reports on the progress of the Work and the minutes of the previous meeting.

5.4.4 The Construction Manager will administer the Contractor's Work.

5.4.5 The Construction Manager shall coordinate the processing of shop drawings and material submittals.

5.4.6 The Construction Manager will endeavor to achieve satisfactory performance by Contractor and, if required, will require corrections to Contractor's Work including, but not limited to, maintaining punch lists and observing testing.

5.4.7 The Construction Manager will monitor the cost of the Project, including payment applications and the preparation thereof.

5.4.8 The Construction Manager will assist in the preparation of record drawings, and shall transmit to the Consultant requests for additional information concerning the design. In addition, the Project Manager shall be copied on these requests for monitoring purposes.

5.4.9 The Construction Manager will observe testing and start-up activities of machinery and utilities.

5.4.10 The Construction Manager will secure all equipment brochures and warranties from the Contractor.

5.4.11 The Construction Manager will coordinate the correction and completion of the Work including that required by the punch list.

5.5 DESIGN/BUILD FIRM herein represents that Consultant, at a minimum, will provide the following services:

5.5.1 Consultant shall perform all of the architectural and engineering services necessary to describe, detail and design the Project in accordance with the Contract Documents.

5.5.2 Consultant shall design the Project so as to comply with Applicable Laws.

5.5.3 Consultant shall prepare the Plans and Specifications, as well as obtain all required and necessary reviews and approvals (or take other appropriate action

upon) for same, and/or other submittals including, but not limited to, shop drawings, product data, and samples.

5.5.4 Consultant shall also submit the Plans and Specifications to the Design Criteria Professional, with a copy to Project Manager, for his/her review and written approval. Design Criteria Professional shall expeditiously review and approve the Plans and Specifications in accordance with the accepted Project Schedule. Design Criteria Professional's approval of the Plans and Specifications shall not constitute acceptance of any design work which does not comply with Applicable Laws, the DCP, and/or with the terms of this Contract. Except as provided herein, and to the extent limited by, the preceding sentence, the approval of the Plans and Specifications by the Design Criteria Professional, shall constitute a representation by the Design Criteria Professional that the Project, if constructed as required by the Contract Documents, will be sufficient for its purposes. The Plans and Specifications shall include technical drawings, schedules, diagrams, and specifications setting forth in detail the requirements for construction of the Project; provide information necessary for the use of Contractor, Subcontractors and those in the building trade; and include documents necessary for regulatory agencies and other governmental approvals.

5.5.5 Consultant shall prepare construction change directives, if necessary, at no additional cost to the CITY, and authorize minor changes in the Work, as provided in the Contract Documents.

5.5.6 Consultant shall receive and review for compliance with the Contract Documents all written warranties and related documents required hereby to be assembled upon Substantial Completion and issue Applications for Payment performed in compliance with the requirements of the Contract Documents.

5.6 The approved and permitted Plans and Specifications shall constitute a representation by Consultant to CITY that the Project, if construed as required by the Contract Documents, will be sufficient for its purposes. The Plans and Specifications include technical drawings, schedules, diagrams, and specifications setting forth in detail the requirements for construction of the Project; provide information necessary for the use of Contractor, Subcontractors, and those in the building trade; and include documents necessary for regulatory agencies and other governmental approvals.

5.7 Project Manager will provide the following services:

5.7.1 The Project Manager shall review Applications for Payment and coordinate the processing thereof with the CITY.

5.7.2 The Project Manager shall monitor the schedule(s).

5.7.3 The Project Manager shall track, log and review all required Project related documents and subsequently address any and all concerns with DESIGN/BUILD FIRM.

5.7.4 The Project Manager shall review and observe the Work and testing thereof for conformance and compliance with the requirements of the Contract Documents.

5.7.5 The Project Manager shall attend all required meetings and maintain and distribute meeting minutes.

5.7.6 At all times, the Project Manager will act as liaison between the parties to this Agreement, and the City's Project Manager.

ARTICLE 6 – CONTRACT TIME AND COMPLETION DATE

6.1 Time is of the essence for the DESIGN/BUILD FIRM's performance of the Work pursuant to this Contract. The DESIGN/BUILD FIRM agrees to complete the Work in accordance with the approved and accepted Project Schedule and to achieve Substantial Completion of the Work, in accordance with this Contract, and within the Contract Time. DESIGN/BUILD FIRM acknowledges that failure to achieve Substantial Completion will result in substantial damages to the CITY, such as loss of beneficial use and/or occupancy of the Project.

6.2 DESIGN/BUILD FIRM shall be instructed to execute the Contract with seven (7) calendar days after CITY COMMISSION approval. DESIGN/BUILD FIRM shall immediately commence scheduling activities, permit applications and other preconstruction work after the Notice to Proceed.

6.3 The DESIGN/BUILD FIRM shall complete the Construction Documents Phase within thirty (30) calendar days of the issuance of the Notice to Proceed.

6.4 The DESIGN/BUILD FIRM shall meet the following milestones:

Milestone	Calendar Days from Notice to Proceed (Completion Date)
Anticipated Notice to Proceed Date	April 02, 2018
Design, Construction Document, and Permitting Completion	260 Business Days (March 29, 2019)
Substantial Completion of Construction	570 Business Days (June 05, 2020)
Final Completion of Project	610 Business Days (July 31, 2020)

ARTICLE 7 – LIQUIDATED DAMAGES

7.1 Failure of the DESIGN/BUILD FIRM to timely complete the Project in accordance with Section 6.4(D) above, or meet any of the milestones as indicated in Sections 6.4 (A) through (C) above, DESIGN/BUILD FIRM shall pay to the City the sum of Five Thousand and 00/100 Dollars ($5,000.00) for each calendar day after the time specified in Section 6.4 (plus any approved time extensions at the sole discretion of the CITY) that DESIGN/BUILD FIRM fails to meet any of the milestones. The time frame for liquidated damages shall not commence and thus shall not be tolled until the Project Manager submits the punch list to the DESIGN/BUILD FIRM. DESIGN/BUILD FIRM and CITY HEREBY MUTUALLY AGREE AND ACKNOWLEDGE THAT THE LIQUIDATED DAMAGES AMOUNT SET FORTH HEREIN are not penalties but are liquidated damages to CITY for its inability to obtain full beneficial occupancy and/or use of the Project. Liquidated damages are hereby fixed and agreed upon between the Parties, recognizing the impossibility of precisely ascertaining the amount of damages that will be sustained by the CITY as a consequence of such delay, and both parties desiring to obviate any question of dispute concerning the amount of said damages and the cost and effect of the failure of DESIGN/BUILD FIRM to complete the Contract on time. Liquidated damages shall apply separately to each portion of the Work for which a time of completion is given. The CITY shall have the right to deduct from or retain any compensation which may be due or which may become due and payable to the DESIGN/BUILD FIRM the amount of liquidated damages, and if the amount retained by the CITY is insufficient to pay in full such liquidated damages, the DESIGN/BUILD FIRM shall pay all liquidated damages in full. The DESIGN/BUILD FIRM shall be responsible for reimbursing the CITY, in addition to liquidated damages or other damages for delay, for all costs of engineering fees and inspection and other costs incurred in administering the construction of the Project beyond the completion date specified or beyond an approved extension of time granted to the DESIGN/BUILD FIRM whichever is later.

7.2 CITY is authorized to deduct liquidated damages from monies withheld due to DESIGN/BUILD FIRM for the Work under this Contract or as much thereof as CITY may, in its sole discretion, deem just and reasonable.

ARTICLE 8 – CHANGE OF THE CONTRACT TIME

8.1 The Contract Time may only be changed by a Change Order. Any claim for an extension in the Contract Time shall be based on written notice delivered to the Project Manager within five (5) days of the occurrence of the event giving rise to the claim. Any change

in the Contract Time resulting from any such claim shall be incorporated in a Change Order.

8.2 The Contract Time will be extended in an amount equal to time lost due to delays beyond the control of the DESIGN/BUILD FIRM if a claim is made there for as provided in paragraph 8.1. Such delays shall include but not be limited to, acts or neglect by the CITY, or to fires, floods, labor disputes, abnormal weather conditions, or acts of God.

8.3 All time limits stated in the Contract Documents are of the essence. The provisions of this Article shall not exclude recovery for damages for delay by the DESIGN/BUILD FIRM.

8.4 Delays caused by or resulting from entities, contractors or subcontractors who are not affiliated with DESIGN/BUILD FIRM shall not give rise to a claim by the DESIGN/BUILD FIRM for damages for increases in material and/or labor costs.

ARTICLE 9 - CONTRACT PRICE (GUARANTEED MAXIMUM PRICE) AND METHOD OF PAYMENT

9.1 The Contract Price is the Guaranteed Maximum Price agreed to by the DESIGN/BUILD FIRM and the CITY under this Agreement, payable to complete the Work in accordance with the Agreement and DCP, and, to the extent permitted by this Agreement, as may be increased or decreased by Change Order.

9.2 The Contract Price for the Project, which is also the Guaranteed Maximum Price is $ _____.

9.3 In the event that the DESIGN/BUILD FIRM's total approved expenditures for the Project exceed the Guaranteed Maximum Price, the DESIGN/BUILD FIRM shall pay such excess from its own funds. CITY shall not be required to pay any amount that exceeds the Guaranteed Maximum Price and the DESIGN/BUILD FIRM shall have no claim against the CITY on account thereof.

9.4 <u>METHOD OF BILLING AND PAYMENT</u>

9.4.1 During the Construction Documents Phase, DESIGN/BUILD FIRM may submit a request for payment monthly based upon percentage of completion of the (final construction) Plans and Specifications. During the Construction Phase, DESIGN/BUILD FIRM may submit a request for payment thirty (30) calendar days after beginning field operations, subject to the Notice to Proceed, and every thirty (30) calendar days thereafter. Payment during the Construction Phase will be based upon percentage of work completed for each item in the approved Schedule of Values. DESIGN/BUILD FIRM's requisition for payment shall

show a complete breakdown of the Project components, and the amount due, together with such supporting evidence, as may be required by the Contract Administrator. At a minimum, the requisition for payment shall be accompanied by a completed certification of Work; consent of surety in the applicable amount; list of Subcontractors that performed Work during the payment application period being submitted; releases of liens from the Contractor for the previous period being billed; releases of liens from Subcontractors that have performed Work during the previous billing period unless payment for the previous period has not been received by the DESIGN/BUILD FIRM; aerials and photographs of the areas of Work for the applicable billing period; an accepted, updated Project Schedule (as approved); and back up for all items being billed. The certification of Work will mean compliance by DESIGN/BUILD FIRM with the approved Project Schedule; that as-built drawings of Improvements are current for the prior period; and applicable laws are being met and complied with. Each requisition for payment shall be submitted to the Project Manager for approval. Payment for Work performed will be made in accordance with the Florida Prompt Payment Act, Sections 255.0705 – 255.078, but not more frequently than once a month. The Contract Administrator shall verify completion of the various phases, as noted, and authorize payment accordingly. Should the Project fall behind schedule, as indicated in the Project Schedule, DESIGN/BUILD FIRM shall include a written plan demonstrating how the Final Completion date shall be maintained.

9.4.2 CITY agrees that it will pay DESIGN/BUILD FIRM within thirty (30) calendar days of receipt of DESIGN/BUILD FIRM's proper requisition for payment, as provided above.

9.4.3 Ten percent (10%) of all monies earned by DESIGN/BUILD FIRM shall be retained by CITY until the Project has obtained Final Completion and been accepted by the CITY, except upon completion of the Construction Documents Phase and approval of the CITY of the Work performed under such phase, the Contract Administrator may release the entire amount of the retainage pertaining to the Consultant fees associated with the Construction Documents Phase. After fifty percent (50%) of the Construction Phase of the Project has been completed, the Contract Administrator, upon written request of the DESIGN/BUILD FIRM and written Consent of Surety in support of said request, may reduce the retainage to five percent (5%) of all monies earned subsequent to the Construction Documents Phase. Any interest earned on retainage shall accrue to the benefit of the CITY.

9.4.4 Undisputed amounts remaining unpaid thirty (30) calendar days after CITY's request of DESIGN/BUILD FIRM's proper requisition for payment for

conforming Work shall bear interest at the rat set forth in Section 218.74(4), Florida Statutes. This section shall not apply if the CITY has a right to withhold any portion of the payment under this Agreement.

9.4.5 Upon receipt of written notice from DESIGN/BUILD FIRM that the Project is ready for final inspection and acceptance, the Contract Administrator shall, within seven (7) calendar days, make an inspection thereof. If the Contract Administrator finds the Project acceptable under the Contract Documents and the Project fully performed, a Final Certificate of Payment shall be issued by the Contract Administrator over his/her own signature, stating that the Work required by this Agreement has been completed and is accepted under the terms and conditions thereof.

9.4.6 Before issuance of the Final Certificate for Payment, DESIGN/BUILD FIRM shall deliver to the Contract Administrator a complete release of all liens arising out of this Agreement, or receipts in full in lieu thereof, and an affidavit certifying that all suppliers, Consultant, Subcontractors, and Subconsultants have been paid in full, and that all other indebtedness connected with the Project has been paid, and a consent of the surety to final payment. All as-builts, warranties, guarantees, operational manuals, and instructions in operation must be delivered to CITY at this time. Contractor shall submit a completed as-built drawings package signed and sealed by a land surveyor registered in the State of Florida and as approved by the CITY's Public Works Department, and proof that all permits have been closed, which shall be delivered prior to requesting final payment. A Certificate of Occupancy, and/or Certificate of Completion (CC) will be obtained prior to final payment being made, if required.

9.4.7 CITY may withhold final payment or any progress payment to such extent as may be necessary on account of:

A. Defective Work not remedied.

B. Claims filed or written notices of nonpayment indicating probable filing of claims as may be prescribed by law by other parties against DESIGN/BUILD FIRM.

C. Failure of DESIGN/BUILD FIRM to make payments properly to Consultant, Subcontractors or Subconsultants, or for material or labor.

D. Damage to another Subcontractor, Subconsultant, supplier, material, person (as provided for in Florida Statute Chapter 713, party or person not remedied which are attributable to DESIGN/BUILD FIRM, its agents, servants,

employees, Contractor, Consultant, Subconsultants, Subcontractors, sub-Subcontractors, sub-Subconsultants, material person and suppliers.

E. Liquidated damages pursuant to Article 5 herein.

F. As-built drawings not being in a current and acceptable state.

9.5 The DESIGN/BUILD FIRM warrants to the CITY that all materials and equipment furnished under this Agreement will be new unless otherwise specified, and that all Work will be of good quality and in conformance with the Contract Documents. All Work not conforming to these requirements, including substitutions not properly approved and authorized by Contract Administrator, may be considered defective. If required by the CITY, the DESIGN/BUILD FIRM shall furnish satisfactory evidence as to the origin, nature and quality of materials and equipment used for the Project. DESIGN/BUILD FIRM shall properly store and protect all construction materials. Materials which become defective through improper storage shall be replaced with new materials at no additional costs. THE DESIGN/BUILD FIRM's warranty excludes reedy for damage or defect caused by abuse, modifications not executed by the DESIGN/BUILD FIRM, improper or insufficient maintenance, improper operation, or normal wear and tear under normal usage.

9.6 When the above grounds are removed or resolved, or DESIGN/BUILD FIRM provides a surety bond or consent of surety satisfactory to CITY which will protect CITY in the amount withheld, payment may be made in whole or in part, as applicable.

9.7 If, after the Project has been substantially completed, full completion thereof is delayed through no fault of DESIGN/BUILD FIRM, or by issuance of Change Orders affecting final completion, and the Project Manager so certifies. CITY shall, upon certification of the Project Manager, and without terminating the Contract, make payment of the balance due for that portion of the Project fully completed and accepted. Such payment shall be made as required by law under the terms and conditions governing final payment, except that it shall not constitute a waiver of claims.

9.8 The making and acceptance of the final payment shall constitute a waiver of all claims by CITY, other than those arising from faulty or defective Work, failure of the Project to comply with requirements of the Contract Documents, or terms of any warranties required by the Contract Documents. It shall also constitute a waiver of all claims by DESIGN/BUILD FIRM, except those previously made in writing and identified by DESIGN/BUILD FIRM as unsettled at the time of the final application for payment.

9.9 If the Project Manager, in his/her reasonable judgment, determines that the portion of the Guaranteed Maximum Price then remaining unpaid will not be sufficient to complete the

Work in accordance with the Contract Documents, no additional payments will be due to the DESIGN/BUILD FIRM hereunder unless and until the DESIGN/BUILD FIRM, at its sole cost, performs a sufficient portion of the Work so that such portion of the Guaranteed Maximum Price then remaining unpaid is determined by the Project Manager to be sufficient to so complete the Work.

9.10 DESIGN/BUILD FIRM shall remain liable for Subcontractors' Work and for any unpaid laborers, material suppliers of Subcontractors in the event it is later discovered that said Work is deficient or that any Subcontractors, laborers, or material suppliers did not receive payments due to them on the Project.

9.11 The DESIGN/BUILD FIRM shall use the sums advanced to it solely for the performance of the Work and the construction, furnishing and equipping of the Work in accordance with the Contract Documents and payment of bills incurred by the DESIGN/BUILD FIRM in performance of the Work.

9.12 Payment will be made through the CITY's P-Card.

ARTICLE 10 - ADDITIONAL SERVICES AND CHANGES IN SCOPE OF WORK

10.1 Without invalidating the Agreement and without notice to any surety, CITY reserves and shall have the right to make such changes from time to time in the character and quantity of the WORK as may be considered necessary or desirable to complete fully and acceptably the Project in a satisfactory manner. The City may order additions, deletions or revisions in the Work. Upon receipt of a Change Order, the DESIGN/BUILD FIRM shall proceed with the Work involved. All Work shall be executed under the applicable conditions of the Contract Documents. If any Change Order causes an increase or decrease in the Contract Price or an extension or shortening of the Contract Time, an equitable adjustment will be made on the basis of a claim made by either party.

10.2 The Project Manager may authorize minor changes in the Work not involving an adjustment in the Contract Price or the Contract Time, which are consistent with the overall intent of the Contract Documents. Such changes must be in writing and signed by the CITY and DESIGN/BUILD FIRM.

ARTICLE 11 - DESIGN/BUILD FIRM'S RESPONSIBILITIES

11.1 The parties acknowledge and agree that the DESIGN/BUILD FIRM will be responsible for the design, construction and construction management of the Project according to the Design Criteria Package (DCP).

11.2 The CITY will be responsible for security, with full cooperation of DESIGN/BUILD FIRM, all environmental permits for the Project, including without limitation, SFWMD, Broward County, Army Corp of Engineers and FDEP. Except as provided in the preceding sentences (as to the permits the CITY is responsible for securing), the DESIGN/BUILD FIRM shall be fully responsible for any and all other permits and approvals from all governmental authorities having jurisdiction over the Project. All permits and licenses (except those that the CITY is expressly responsible for herein) require by federal, state or local laws, rules, and regulations necessary for the prosecution of the Project by DESIGN/BUILD FIRM pursuant to this Agreement shall be secured by the DESIGN/BUILD FIRM and paid for by the CITY. It is the DESIGN/BUILD FIRM's responsibility to have and maintain appropriate certificate(s) of competency, valid for the Work to be performed, and for all persons working on the Project for whom a certificate of competency is required.

11.3 DESIGN/BUILD FIRM shall be fully responsible for the actions of all its agents, servants, employees, including, but not limited to, the Contractor, Consultant, Subcontractors, Sub-Consultants, sub-Subcontractors, Materials persons (pursuant to Chapter 713, Florida Statutes), and any and all other persons working for it in conjunction with the design and construction of the Project.

11.4 DESIGN/BUILD FIRM shall be fully responsible for all acts or omissions of its Contractor, Consultant, Subcontractors, Sub-Consultants, sub-Subcontractors, sub-Sub-Consultants, Materials persons, and any and all other persons working for DESIGN/BUILD FIRM in conjunction with the design and construction of the Project; any and all persons working for Contractor, Consultant, Subcontractors or Sub-Consultant; and any and all persons for whose acts any of the aforesaid may be liable, to the same extent DESIGN/BUILD FIRM is responsible for the acts and omissions of persons directly employed by DESIGN/BUILD FIRM. Nothing in this Agreement shall create any contractual relationship between CITY and Consultant, or CITY and any Subcontractor, Sub-Consultant, sub-Subcontractor, sub-Sub-Consultant, or any other person working either for DESIGN/BUILD FIRM or for any of the aforestated parties in conjunction with the design and construction of the Project, including, without limitation, any obligation on the part of the CITY to pay or to see the payment of any monies due to any of the aforestated parties pursuant to this section.

11.5 DESIGN/BUILD FIRM agrees to bind its Consultant, Subcontractors, and Sub-Consultants to the applicable terms and conditions of this Agreement for the benefit of the CITY.

11.6 Unless otherwise provided herein, DESIGN/BUILD FIRM shall provide and pay for all architecture, engineering, landscape architecture, land surveying services, materials, construction and other labor, water, tools, equipment, light, power, transportation, and

other facilities and services necessary for the proper execution and completion of the design and construction of the Project, whether temporary or permanent, and whether or not incorporated or to be incorporated in the Project.

11.7 DESIGN/BUILD FIRM shall at all times enforce strict discipline and good order among its employees, Consultants, Subcontractors and Sub-Consultants at the Project site, and shall not employ on the Project any unfit person or anyone not skilled in the work and/or services assigned to him or her.

11.8 DESIGN/BUILD FIRM shall keep itself fully informed of, and shall take into account and comply with any and all Applicable Laws affecting those engaged or employed in the Project; or the Materials used or employed in the design and construction of the Project; or in any way affecting the conduct of the Project, including, without limitation, all such orders and decrees of bodies or tribunals having any jurisdiction or authority over the same and of all provisions required by law to be made a part of this Agreement, all of which provisions are hereby incorporated by reference and made a part hereof. If any specification or contract for this Project is in violation of any such Applicable Laws, DESIGN/BUILD FIRM shall forthwith report the same to the Contract Administrator in writing. DESIGN/BUILD FIRM shall cause all its employees, agents, Consultant, Subcontractors, Subconsultants, sub-Subconsultants and sub-Subcontractors to observe and comply with all Applicable Laws.

11.9 DESIGN/BUILD FIRM shall pay all applicable sales, consumer, use and other taxes required by law. DESIGN/BUILD FIRM is responsible for reviewing the pertinent State statutes involving State taxes and complying with all requirements.

11.10 If DESIGN/BUILD FIRM has knowledge that the Contract Documents do not comply with Applicable Laws, in any respect, the DESIGN/BUILD FIRM shall promptly notify the Project Manager, in writing, and any necessary changes shall be adjusted by appropriate revisions. If the DESIGN/BUILD FIRM performs any Work not in accordance with Applicable Laws, and without such notice to the Project Manager, the DESIGN/BUILD FIRM shall assume full responsibility therefore, and shall bear all costs attributable thereto. DESIGN/BUILD FIRM warrants to CITY that it has thoroughly reviewed and studied the DCP, and has determined that it is in conformance with Applicable Laws, and is complete and sufficiently coordinated to perform the Work for the Guaranteed Maximum Price and the Contract Time. DESIGN/BUILD FIRM warrants to CITY that the DCP is consistent, practical, feasible and constructible. DESIGN/BUILD FIRM further warrants to CITY that the Work described in the DCP is constructible for the Guaranteed Maximum Price and the Contract Time.

THE CITY DISCLAIMS ANY WARRANTY THAT THE DCP FOR THE PROJECT IS ACCURATE, PRATICAL, CONSISTENT, AND/OR CONSTRUCTIBLE.

11.11 DESIGN/BUILD FIRM accepts the Project site in its observable and/or documented condition existing at the time of this Agreement, or conditions ordinarily encountered and generally recognized as inherent to the character of the Work to be provided for in this Project. By signing this Contract, the DESIGN/BUILD FIRM represents to the CITY that it has: (a) visited the Project site to become familiar with the conditions under which the Work is to be performed; (b) become familiar with all information provided (without warranty) by the CITY pertaining to the Project site; and (c) correlated its observations with the information furnished by the CITY (without warranty), and the Contract Documents. The DESIGN/BUILD FIRM hereby waives additional time or compensation for additional work made necessary by observable and/or documented conditions existing at the Project site, or conditions ordinarily encountered and generally recognized as inherent to the character of the Work to be provided for in this Project.

11.12 The DESIGN/BUILD FIRM agrees specifically that no Change Orders shall be required by the DESIGN/BUILD FIRM or considered by the CITY for reasons involving conflicts in the Contract Documents; questions of clarity with regard to the Contract Documents; and incompatibility or conflicts between the Contract Documents and the existing Project site conditions excluding, without limitation, utilities and unforeseen underground conditions at the discretion of the CITY and will not be unreasonably withheld. The DESIGN/BUILD FIRM acknowledges that it has ascertained all correct locations for points of connection for all utilities required for this Project.

11.13 The DESIGN/BUILD FIRM shall comply with all conditions of any permits issued by government authorities.

11.14 All material and equipment shall be of good quality and new, except as otherwise provided in the Contract Documents. Suppliers shall be selected and paid by the DESIGN/BUILD FIRM; the CITY reserves the right to approve all suppliers and materials.

11.15 The DESIGN/BUILD FIRM shall pay all license fees and royalties and assume all costs incident to the use in the performance of the Work or the incorporation in the Work, or any invention, design, process, product or device which is the subject of patent rights or copyrights held by others. The DESIGN/BUILD FIRM hereby expressly binds itself to indemnify and save harmless the CITY from all such claims and fees and from any and all suits and actions of every name and description that may be brought against CITY on account of any such claims, fees, royalties, or costs for any such invention or patent, and from any and all suits or actions that may be brought against said CITY for the infringement of any and all patents or patent rights claimed by any person, firm, corporation or other entity.

11.16 Except in connection with the safety or protection of persons, or the Work, or property at the site or adjacent thereto, and except as otherwise indicated in the Supplementary Conditions, all work at the site shall be performed during regular working hours between 8:00 am to 6:00 pm, Monday through Friday. The DESIGN/BUILD FIRM will not permit overtime work or the performance of work on Saturday, Sunday or any legal holiday (designated by the City of Fort Lauderdale) without the Project Manager's written consent at least seventy-two (72) hours in advance of starting such work. If the Project Manager permits overtime work, the DESIGN/BUILD FIRM shall pay for the additional charges to the CITY with respect to such overtime work. Such additional charges shall be a subsidiary obligation of the DESIGN/BUILD FIRM and no extra payment shall be made to the DESIGN/BUILD FIRM for overtime work. The cost to the DESIGN/BUILD FIRM to reimburse the CITY for overtime inspections is established at direct-labor and overtime costs for each person or inspector required. Incidental overtime costs for engineering, testing and other related services will also be charged to the DESIGN-BUILD FIRM at the actual rate accrued.

11.17 In the event of an emergency affecting the safety or protection of persons or the Work or property at the site or adjacent thereto, DESIGN/BUILD FIRM, without special instruction or authorization from the CITY is obligated to act to prevent threatened damage, injury or loss. DESIGN/BUILD FIRM shall give the Project Manager prompt written notice of any significant changes in the Work or deviations from the Contract Documents caused thereby.

11.18 Upon issuance of a Hurricane Watch by the National Weather Service, DESIGN/BUILD FIRM shall submit to the City a plan to secure the work area in the event a Hurricane Warning is issued. The plan shall detail how the DESIGN/BUILD FIRM will secure the premises, equipment and materials in a manner as to prevent damage to the Work and prevent materials and equipment from becoming a hazard to persons and property on and around the premises. The plan shall include a time schedule required to accomplish the hurricane preparations and a list of emergency contacts that will be available and in the CITY before, during and immediately after the storm.

Upon issuance of a Hurricane Warning by the National Weather Service, if the DESIGN/BUILD FIRM has not already done so, the DESIGN/BUILD FIRM shall implement its hurricane preparedness plan. Cost of development and implementation of the hurricane preparedness plan shall be considered as incidental to construction. Cost of any clean up and rework required after the storm will be considered normal construction risk within Florida and shall not entitle the DESIGN/BUILD FIRM to any additional compensation. DESIGN/BUILD FIRM shall be entitled to request an extension of time for completion of the Work, in accordance with the provision of Article ____ of this Agreement, equal to the time it is shut down for implementation of the preparedness plan, the duration of the storm and a reasonable period to restore the Premises.

11.19 Force Majeure: No Party shall hold the other responsible for damages or for delays in performance caused by force majeure, acts of God, or other acts or circumstances beyond the control of the other party or that could not have been reasonably foreseen and prevented. For these purposes, such acts or circumstances shall include, but not be limited to, weather conditions affecting performance, floods, epidemics, war, riots, strikes, lockouts, or other industrial disturbances, or protest demonstrations. Should such acts or circumstances occur, the parties shall use their best efforts to overcome the difficulties arising therefrom and to resume the Work as soon as reasonably possible with the normal pursuit of the Work.

Inclement weather, continuous rain for less than three (3) days or the acts or omissions of subcontractors, third-party contractors, materialmen, suppliers, or their subcontractors, shall not be considered acts of force majeure.

No Party shall be liable for its failure to carry out its respective obligations under the Agreement during a period when such Party is rendered unable by force majeure to carry out its obligation, but the obligation of the Party or Parties relying on such force majeure shall be suspended only during the continuance of the inability and for no longer period than the unexpected or uncontrollable event.

The DESIGN/BUILD FIRM further agrees and stipulates, that its right to excuse its failure to perform by reason of force majeure shall be conditioned upon giving written notice of its assertion that a force majeure delay has commenced within 96 hours after such an occurrence. The DESIGN/BUILD FIRM shall use its reasonable efforts to minimize such delays. The DESIGN/BUILD FIRM shall promptly provide an estimate of the anticipated additional time required to complete the Project.

ARTICLE 12 - CITY'S RESPONSIBILITIES

12.1 CITY shall assist DESIGN/BUILD FIRM by placing at its disposal any available information pertinent to the Project including previous reports, laboratory tests and inspections of samples, materials and equipment; property, boundary, easement, rights-of-way, topographic and utility surveys; property descriptions; and known zoning, deed and other land use restrictions.

12.2 CITY shall arrange for access to and make all provisions for DESIGN/BUILD FIRM to enter upon public property as required for DESIGN/BUILD FIRM to perform its services.

12.3 CITY shall render decisions under this Agreement in a timely manner.

ARTICLE 13 - SUPERINTENDENCE AND SUPERVISION

13.1 The orders of the CITY are to be given through the Project Manager, whose instructions are to be strictly and promptly followed in every case, provided that they are in accordance with this Contract and the other Contract Documents. Construction Manager shall keep on the Project during its progress, a full-time, competent, English speaking supervisor, who shall be the Construction Manager Representative and who shall serve as the superintendent, and any necessary assistants, all satisfactory to the Project Manager.

13.2 Construction Manager or Construction Manager Representative shall prepare, on a daily basis, and keep on the Project site, a bound log setting forth at a minimum, for each day: the weather conditions and how any weather conditions affected progress of the Work; time of commencement of Work for the day; the Work performed; materials, labor, personnel, equipment and Subcontractors used for the Work; any idle equipment and reasons for idleness; visitors to the Project site; any special or unusual conditions or occurrences encountered; any materials delivered to the Project site; and the time of termination of Work for the day. The daily bound log shall be available for inspection by the CITY, or its authorized designee, at all times during the Project, without previous notice.

13.3 If DESIGN/BUILD FIRM, in the course of the Project, finds any discrepancy between the Contract Documents and the physical conditions of the site, or any errors or omissions in the Contract Documents including, but not limited to, the Plans and Specifications, it shall be DESIGN/BUILD FIRM's sole obligation and duty to immediately inform the Project Manager, in writing, and the Project Manager will promptly verify same. Any Work done prior to or after such discovery will be done at DESIGN/BUILD FIRM's sole risk. NOTWITHSTANDING THE PRECEDING, OR ANY OTHER TERM OR CONDITION OF THIS AGREEMENT, DESIGN/BUILD FIRM HEREBY ACKNOWLEDGES AND AGREES THAT THIS IS A DESIGN/BUILD PROJECT AND, ACCORDINGLY, ANY ERRORS OR OMISSIONS SHALL BE CORRECTED AT THE SOLE COST AND EXPENSE OF DESIGN/BUILD FIRM AND WITHOUT A CLAIM FOR ADJUSTMENT IN THE CONTRACT TIME OR CONTRACT PRICE.

13.4 DESIGN/BUILD FIRM shall coordinate, supervise and direct the Project competently and efficiently, devoting such attention thereto and applying such skills and expertise as may be necessary to perform and complete the Project in accordance with the Contract Documents. DESIGN/BUILD FIRM shall be solely responsible for the design, preparation of Construction Documents, means, methods, techniques, safety, sequences

and procedures of construction. DESIGN/BUILD FIRM shall give efficient supervision to the Work, using DESIGN/BUILD FIRM's best skill, attention and judgment.

ARTICLE 14 - RESOLUTION OF DISPUTES

14.1 Questions, claims, difficulties and disputes of whatever nature which may arise relative to the technical interpretation of the Contract Documents and fulfillment of this Agreement as to the character, quality, amount and value of any work done and materials furnished, or proposed to be done or furnished under or, by reason of, the Contract Documents which cannot be resolved by mutual agreement of CITY Project Manager and DESIGN/BUILD TEAM Project Manager shall be submitted to the City Manager or his designee and DESIGN/BUILD TEAM's representative for resolution. When either party has determined that a disputed question, claim, difficulty or dispute is at an impasse, that party shall notify the other party in writing and submit the question, claim, difficulty or dispute to the next level of the parties' respective management levels for resolution. Each party may determine in such party's reasonable discretion as to who the "next level of management" is for purposes of resolving disputes.

14.2 All non-technical administrative disputes (such as billing and payment) shall be determined by the Project Manager.

14.3 During the pendency of any dispute and after a determination thereof, DESIGN/BUILD TEAM, and CITY shall act in good faith to mitigate any potential damages including using construction schedule changes and alternate means of construction. During the pendency of any dispute arising under this Agreement, other than termination herein, DESIGN/BUILD TEAM shall proceed diligently with performance of this Agreement and CITY shall continue to make payments for undisputed amounts in accordance with the Contract Documents.

14.4 In the event a resolution of a dispute under this section cannot be resolved, the issue shall be submitted by the DESIGN/BUILD TEAM to the CITY MANAGER or designee, in writing within ten (10) days of the impasse. The notice must state the basis of the dispute and the DESIGN/BUILD TEAM's proposed resolution. The notice given by the DESIGN/BUILD TEAM must include a written notarized certification that any GMP adjustment claimed is the entire adjustment to which the DESIGN/BUILD TEAM has reason to believe it is entitled to as a result of the question, claim, difficulty or dispute. Resolution of such dispute shall be made by the City Manager or designee. The City Manager's decision shall be final and binding on the parties subject to mediation and judicial review.

14.5 Prior to any litigation being commenced, for any disputes which remain unresolved, within sixty (60) days after Final Completion of the Work, the parties shall participate in

mediation to address all unresolved disputes to a mediator mutually agreed upon by the parties. Should any objection not be resolved in mediation, the parties retain all their legal rights and remedies provided under the laws of Florida. Failure by a party to comply in strict accordance with the requirements of this Article, then said party specifically waives all of its rights provided hereunder, including its rights and remedies under the laws of Florida.

ARTICLE 15 - CITY'S RIGHT TO TERMINATE AGREEMENT

15.1 If DESIGN/BUILD FIRM fails to begin the design and construction of the Project within the time specified, or fails to perform the Project with sufficient workers and equipment or with sufficient materials to insure the prompt completion of the Project, in accordance with the Contract Documents and schedules, or shall perform the Work unsuitably, or cause it to be rejected as defective and unsuitable; or shall discontinue the prosecution of the Project, except for excused delays in accordance with this Agreement; or if DESIGN/BUILD FIRM shall become insolvent or be declared bankrupt, or commit any act of bankruptcy or insolvency, or shall make an assignment for the benefit of creditors; or shall not carry on the Project in accordance with the Contract Documents, then the CITY shall give notice, in writing, to DESIGN/BUILD FIRM and its surety of such delay, neglect or default, specifying the same. If DESIGN/BUILD FIRM within a period of ten (10) calendar days after such notice, shall not proceed in accordance therewith, then CITY may, upon written notice from the Project Manager of the fact of such delay, neglect or default and DESIGN/BUILD FIRM's failure to comply with such notice, terminate the services of DESIGN/BUILD FIRM, exclude DESIGN/BUILD FIRM from the Project site, and take the prosecution of the Project out of the hands of DESIGN/BUILD FIRM, as appropriate, or use any or all materials and equipment on the Project site as may be suitable and acceptable, in the CITY's reasonable discretion. In such case, DESIGN/BUILD FIRM shall not be entitled to receive any further payment until the Project is finished. In addition, CITY may enter into an Agreement for the completion of the Project according to the terms and provisions of the Contract Documents, or use such other methods as in its opinion shall be required for the completion of the Project in an acceptable manner. All damages, costs and charges incurred by CITY shall be deducted from any monies due or which may become due to said DESIGN/BUILD FIRM. Actions will be instituted to recover on the posted bonds. In case the damages and expense so incurred by CITY shall be less than the sum which would have been payable under this Agreement, if it had been completed by said DESIGN/BUILD FIRM, then DESIGN/BUILD FIRM shall be entitled to receive the difference. If such damages and costs exceed the unpaid balance, then DESIGN/BUILD FIRM shall be liable and shall pay to CITY the amount of said excess.

15.2 If, after Notice of Termination of DESIGN/BUILD FIRM's right to proceed, it is determined for any reason that DESIGN/BUILD FIRM was not in default, the rights and obligations of CITY and DESIGN/BUILD FIRM shall be the same as if the notice of termination had been issued pursuant to the Termination for Convenience clause, as set forth in Section 13.3 below.

15.3 Notwithstanding any other provision in this Agreement, the performance of work under this Agreement may be terminated in writing by CITY, for convenience and without cause, upon ten (10) business days from the date of DESIGN/BUILD FIRM's receipt of the written notice to DESIGN/BUILD FIRM of intent to terminate and the date on which such termination becomes effective. In such case, DESIGN/BUILD FIRM shall be paid for all work and reimbursables executed, and expenses incurred, such as materials stored, cost of severance of leases/contracts directly associated with the Project, and demobilization prior to termination. PAYMENT SHALL INCLUDE REASONABLE PROFIT FOR SERVICES ACTUALLY PERFORMED IN FULL PRIOR TO TERMINATION DATE, BUT SHALL EXCLUDE ALL LOST PROFITS, INDIRECT CONSEQUENTIAL, SPECIAL OR OTHER DAMAGES.

15.4 Upon receipt of Notice of Termination pursuant to Sections 13.1 and 13.2 above, DESIGN/BUILD FIRM shall, at its sole cost and expense (other than demobilization as a result of the Notice of Termination pursuant to Section 13.3 which shall be paid for by the CITY) and as a condition precedent to any further payment obligation by the CITY, promptly discontinue all affected work, unless the Notice of Termination directs otherwise, and deliver to CITY within seven (7) calendar days of termination, all data, drawings, specifications, reports, estimates, summaries and such other information as may have been required by the Contract Documents, whether completed or in process. Compensation shall be withheld until all documents are produced to CITY pursuant to this Article.

ARTICLE 16 - DESIGN/BUILD FIRM'S RIGHT TO STOP WORK OR TERMINATE CONTRACT

16.1 If the Project should be stopped under any order of any court or other public authority for a period of more than ninety (90) calendar days, through no act or fault of DESIGN/BUILD FIRM or of anyone employed by DESIGN/BUILD FIRM, or if the Project Manager should fail to review and approve or state in writing reasons for non-approval of any requisition for payment within twenty (20) business days after it is presented; or if CITY fails to pay DESIGN/BUILD FIRM within thirty (30) calendar

days after submittal of a proper requisition for payment, as approved by the Project Manager, then DESIGN/BUILD FIRM may give written notice to CITY, of such delay, neglect or default, specifying same. If CITY, within a period of ten (10) business days after such written notice, shall not remedy the delay, neglect, or default upon which notice is based, then DESIGN/BUILD FIRM may stop work until payment is made, or terminate this Agreement and recover from CITY payment for all Work executed and reasonable expenses sustained, but excluding any claim for payments for lost profits, indirect, special, consequential or other damages.

ARTICLE 17 - NOTICES

17.1 Whenever either party desires to give notice to the other, such notice must be in writing with proof of delivery or receipt. The notice shall be address to the party for whom it is intended at the place last specified; and the place for giving of notice shall remain until it shall have been changed by written notice in compliance with the provisions of this paragraph. For the present, the parties designate the following as the respective places for giving notice:

FOR THE CITY:
City Manager
City of Fort Lauderdale
100 North Andrews Avenue
Fort Lauderdale, Florida 33301
with copies to:

Project Manager and City Attorney
City of Fort Lauderdale
100 North Andrews Avenue
Fort Lauderdale, Florida 33301

FOR THE DESIGN/BUILD TEAM:

ARTICLE 18 – BONDS AND INSURANCE

18.1 DESIGN/BUILD FIRM shall furnish, or cause to be furnished, on or before seven (7) days after execution of this Agreement, the following:

<u>Performance Bond and Payment Bond (Surety)</u>

18.2 THE DESIGN/BUILD FIRM shall execute and record in the public records of Broward County, Florida, a payment and performance bond in an amount at least equal to the

Contract Price guaranteeing to CITY the completion and performance of the Project covered in this Agreement as well as full payment of all suppliers, material persons, laborers, or Subcontractors employment pursuant to the Project. The Payment and Performance bond shall be with a surety insurer authorized to do business in the state of Florida as surety, ("Bond"), in accordance with Sec. 255.05, Fla. Stat., as may be amended or revised, as security for the faithful performance and payment of all of the Contractor's obligations under the Contract Documents. The performance and payment bond shall remain in full force and effect during the Project and 60 days beyond the contract term for close out.

18.3 THE DESIGN/BUILD FIRM shall furnish to the CITY, Certificate(s) of Insurance which indicate that insurance coverage has been obtained which meets the requirements as outlined below and in the solicitation:

COMMERCIAL GENERAL LIABILITY

Commercial General Liability and Required Endorsements in Solicitation:

Bodily Injury and Property Damage Liability	
Combined Single Limit	
Each Occurrence	Limit:$1,000,000
General Aggregate Limit	Limit: $2,000,000
Personal Injury	Limit: $1,000,000
Products/Completed Operations:	Limit: $1,000,000
Bodily Injury and Property Damage Liability	
Combined Single Limit	
Any Auto	Limit: $1,000,000

Other:

Longshoreman/Jones Act to the Workers Comp	Limit: Statutory
Pollution Liability	Limit: $1,000,000
Excess/Umbrella Liability	Limit: $2,000,000
Marine Liability, with P & I and Hull Coverage	Limit: $1,000,000

Professional Liability/Errors and Omissions Coverage:

Combined Single Limit	
Each Occurrence	Limit: $1,000,000
General Aggregate Limit	Limit: $2,000,000
Deductible not to exceed	10%

Must be in effect for at least five (5) years after Project completion

18.4 All deductibles for insurance required in this Agreement are the responsibility of the DESIGN/BUILD FIRM. Certificates will indicate no modification or change in insurance shall be made without thirty (30) days in advance notice to the certificate holder. Certificate holder must read: CITY OF FORT LAUDERDALE, 100 N. Andrews Avenue, Fort Lauderdale, Florida 33301. Compliance with the foregoing requirements shall not relieve the DESIGN/BUILD FIRM of its liability and obligation under this section or under any other section of this Agreement.

18.5 The DESIGN/BUILD FIRM shall be responsible for assuring that the insurance certificates required in conjunction with this Section remain in force for the duration of the Project. If insurance certificates are scheduled to expire during the contractual period, the DESIGN/BUILD FIRM shall be responsible for submitted new or renewed insurance certificates to the City at a minimum of thirty (30) calendar days in advance of such expiration. In the event that expired certificates are not replaced with new or renewed certificates that cover the contractual period, the CITY shall:

A. Suspend the Agreement until such time as the new or renewed certificates are received by the CITY;

B. The CITY may, at its sole discretion, terminate the Agreement for cause and seek damages from the Contractor in conjunction with the violation of the terms and conditions of the Agreement.

ARTICLE 19 - SUBSTANTIAL COMPLETION

19.1 When DESIGN/BUILD FIRM considers that the Project, or a designated portion thereof, which is acceptable to CITY, in the event CITY chooses to accept same pursuant to the sole authority and discretion, is substantially complete, DESIGN/BUILD FIRM shall so notify the Project Manager, in writing, and shall prepare for submission to the Project Manager a thorough list of items to be completed or corrected, together with a schedule for completion of all items. The failure to include any items on such list does not alter the responsibility of DESIGN/BUILD FIRM to complete all Work in accordance with the Contract Documents. The Project Manager, and such other persons as they may deem necessary, shall conduct a joint inspection to determine that the Project (or designated portion thereof) is substantially complete. The Project Manager will then instruct DESIGN/BUILD FIRM to prepare and deliver to the Project Manager a Certificate of Substantial Completion which shall establish the date of Substantial Completion for the Project (or that portion of the Project). After review of the certificate by the Project Manager, CITY shall either accept or reject the certificate. Acceptance of Substantial Completion by CITY shall be based upon compliance with the Contract Documents and

Applicable Laws. DESIGN/BUILD FIRM shall have thirty (30) days to complete the items listed therein. Warranties required by the Contract Documents and submitted in appropriate form to the Project Manager along with the request for Substantial Completion shall commence on the date of Substantial Completion of the Project (or for that portion of the Project). The Certificate of Substantial Completion shall be submitted to CITY through the Project Manager and DESIGN/BUILD FIRM for its written acceptance of the responsibilities assigned to it in such Certificate.

ARTICLE 20 - SHOP DRAWINGS AND SCHEDULE OF VALUES

20.1 DESIGN/BUILD FIRM shall submit Shop Drawings for all equipment, apparatus, machinery, fixtures, piping, wiring, fabricated structures and manufactured articles. The purpose of a Shop Drawing is to show the suitability, efficiency, technique of manufacture, installation requirements, details of the item and evidence of its compliance or noncompliance with the Contract Documents.

20.2 DESIGN/BUILD FIRM shall thoroughly review and check the Shop Drawings and each and every copy shall show DESIGN/BUILD FIRM's approval thereon.

20.3 If the Shop Drawings show or indicate departures from the Contract requirements, DESIGN/BUILD FIRM shall make specific mention thereof in its shop drawing submittal and a separate letter. Failure to point out such departures shall not relieve DESIGN/BUILD FIRM from its responsibility to comply with the Contract Documents. Project Manager shall determine acceptability of change and, in considering said change, may require data, technical comparisons, cost comparisons, quality comparisons and/or calculations to determine the equality of deviations. Project Manager is not obligated to accept deviations.

20.4 No acceptance will be given to partial submittal of Shop Drawings for items which interconnect and/or are interdependent. It is DESIGN/BUILD FIRM's responsibility to assemble the Shop Drawings for all such interconnecting and/or independent items, check them, and then make one (1) submittal to the Project Manager, along with DESIGN/BUILD FIRM's comments as to compliance, noncompliance, or features requiring special attention.

20.5 If catalog sheets or prints of manufacturers' standard drawings are submitted as Shop Drawings, any additional information or changes on such drawings shall be typewritten or lettered in ink. Catalog sheet with multiple options shall be highlighted to depict specific pertinent data including options.

20.6 DESIGN/BUILD FIRM shall submit to Project Manager five (5) copies. Re-submissions of Shop Drawings shall be made in the same quantity until final acceptance is obtained.

20.7 Project Manager's acceptance of the Shop Drawings, as approved by DESIGN/BUILD FIRM, will be for general compliance with the Plans and Specifications, and shall not relieve DESIGN/BUILD FIRM of responsibility for the accuracy of such Drawings, nor for the proper fittings and construction of the Work, nor for the furnishing of the Materials or Work required by the Contract and not indicated on the Drawings.

20.8 DESIGN/BUILD FIRM shall keep one (1) set of Shop Drawings, marked with the Contract Administrator's acceptance, as the Project site at all times.

20.9 The DESIGN/BUILD FIRM shall submit a Schedule of Values to the Contract Administrator as specified in the Technical Specifications. DESIGN/BUILD FIRM shall submit to the Project Manager a separate Schedule of Values for demolition, abatement, and site work ten (10) calendar days prior to commencing such portion of the Work. The schedule will be typed on 8 ½" x 11" white paper listing: title of Project, location, Project number, Consultant, Contractor, Contract designation and date of submission. The schedule shall list the installed value of the component parts of the Work in sufficient detail to serve as a basis for computing values for progress payments during the construction. The table of contents of the specifications shall establish the format for listing the component items. Each line item will be identified by the number and title of the respective major section of the specifications. For each line item, DESIGN/BUILD FIRM shall list the sub-values of major products or operations under the item. Each item shall include the proportion of DESIGN/BUILD FIRM's overhead and profit. For any items for which progress payments will be requested for stored materials, the value will be broken down with:

A. The cost of materials delivered, unloaded, properly stored and safeguarded, with taxes paid; and

B. The total installed value.

ARTICLE 21 - FIELD ENGINEERING

21.1 The DESIGN/BUILD FIRM shall provide and pay for field engineering services required for the Project. This work shall include the following elements:

A. Survey work required in execution of the Project;

B. Civil, structural or other professional engineering, architectural, landscape architectural, or land surveying services specified, or required to execute the DESIGN/BUILD FIRM's construction methods.

21.2 The survey completed by DESIGN/BUILD FIRM will identify the qualified engineer or registered land surveyor, acceptable to the CITY, and he or she shall be retained by the DESIGN/BUILD FIRM at the outset of this Project.

21.2.1 The survey will locate and protect control points prior to starting site work, and will preserve all permanent reference points during construction.

21.2.2 No changes or relocations will be made without prior written notice to the Project Manager.

21.2.3 A written report shall be made to the Project Manager when any reference point is lost or destroyed, or requires relocation because of necessary changes in grades or locations.

21.2.4 The surveyor shall be required to replace Project control points which may be lost or destroyed. The surveyor shall be duly registered as a surveyor or mapper, as required by state law.

21.2.5 Replacements shall be established based upon original survey control.

ARTICLE 22 - FIELD LAYOUT FOR THE WORK AND RECORD DRAWINGS

22.1 The entire responsibility for establishing and maintaining a line and grade in the field lies with DESIGN/BUILD FIRM. DESIGN/BUILD FIRM shall maintain an accurate and precise horizontal and vertical record of the existing pavement conditions; final pavement conditions; and all pipe lines, conduits, structures, underground utility access portals, handholes, fittings, etc. encountered or installed during construction. DESIGN/BUILD FIRM shall deliver these records in good order to the Project Manager as the work is completed. These records shall serve as a basis for “as-built” drawings. The cost of all such field layout and recording work is included in the Contract Price.

22.2 DESIGN/BUILD FIRM shall maintain in a safe place at the site, one (1) record copy of the Plans and Specifications, addenda, written amendments, Change Orders and written interpretations and clarifications, in good order and annotated to show all changes made during construction. These record documents, together with all approved samples and a counterpart of all approved Shop Drawings, will be available to Project Manager for reference. Upon completion of the Project, these record documents, samples and Shop Drawings shall be delivered to the Project Manager.

22.3 At the completion of the Project, the DESIGN/BUILD FIRM shall turn over to the City a set of reproducible drawings and a complete set of all drawings in the latest version of AutoCAD on Compact Disk, not compressed, which accurately reflect the “as-built”

conditions of the new facilities. All changes made to the Construction Documents, either as clarifications or as changes, will be reflected in the plans. The changes shall be submitted at least monthly to the Project Manager. These "as-built" drawings and the latest version of the AutoCAD format media must be delivered and found to be acceptable prior to final payments.

ARTICLE 23 - NO DAMAGES FOR DELAY

23.1 NO CLAIM FOR DAMAGES OR ANY CLAIM OTHER THAN FOR AN EXTENSION OF TIME SHALL BE MADE OR ASSERTED AGAINST CITY BY REASON OF ANY DELAYS. DESIGN/BUILD FIRM shall not be entitled to an increase in the Contract Price or payment or compensation of any kind from CITY for direct, indirect, consequential, impact, or other costs, expenses or damages including, but not limited to, costs of acceleration or inefficiency arising because of delay, disruption, interference or hindrance from any cause whatsoever, whether such delay, disruption, interference, or hindrance be reasonable or unreasonable, foreseeable or unforeseeable, or avoidable or unavoidable; provided, DESIGN/BUILD FIRM hindrances or delays are not due solely to fraud, bad faith or active interference by the CITY, DESIGN/BUILD FIRM shall be entitled only to extensions of the Contract Time as the sole and exclusive remedy for such resulting delays, in accordance with and to the extent specifically provided above. The specific application of this Article to other provisions of this Agreement shall not be construed as a limitation of any sort upon the further application of this Article. Ten Dollars ($10.00) of DESIGN/BUILD FIRM's fee is acknowledged as separate and independent consideration for the covenants contained in this Article.

ARTICLE 24 - LIMITATION OF LIABILITY

24.1 The CITY desires to enter into this Agreement only if in so doing the CITY can place a limit on the CITY's liability for any cause of action arising out of this Agreement, so that the CITY's liability for any breach never exceeds the sum of $1,000.00. For other good and valuable consideration, the receipt and sufficiency of which is hereby acknowledged, the DESIGN/BUILD FIRM hereby expresses its willingness to enter into this Agreement with the knowledge that the DESIGN/BUILD FIRM's recovery from the CITY to any action or claim arising from the Agreement is limited to a maximum amount of $1,000.00, which amount shall be reduced by the amount actually paid by the CITY to the DESIGN/BUILD FIRM pursuant to this Agreement, for any action or claim arising out of this Agreement. Nothing contained in this paragraph or elsewhere in this Agreement is in any way intended either to be a waiver of the limitation placed upon the CITY's liability beyond the limits established in Fla. Stat. Sec. 768.28; and no claim or

award against the CITY shall include attorney's fees, investigative costs, expert fees, suit costs or pre-judgment interest.

ARTICLE 25 - GOVERNING LAW

25.1 This Agreement shall be interpreted and construed in accordance with and governed by the laws of the State of Florida. Any controversies or legal problems arising out of this Agreement and any action involving the enforcement or interpretation of any rights hereunder shall be submitted to the exclusive jurisdiction of the State courts of the Seventeenth Judicial Circuit of Broward County, Florida, the venue situs, and shall be governed by the laws of the State of Florida. To encourage prompt and equitable resolution of any litigation that may arise hereunder, EACH PARTY HEREBY WAIVES ANY RIGHTS IT MAY HAVE TO A TRIAL BY JURY OF ANY SUCH LITIGATION. DESIGN/BUILD FIRM SHALL SPECIFICALLY BIND ITS PROJECT TEAM MEMBERS AND ANY AND ALL SUBCONTRACTORS TO THE PROVISIONS OF THE CONTRACT.

ARTICLE 26 - MISCELLANEOUS PROVISIONS

26.1 OWNERSHIP OF DOCUMENTS: All finished or unfinished documents, data, studies, surveys, drawings, maps, models, photographs, specifications, plans and reports prepared or provided by DESIGN/BUILD TEAM in connection with this Agreement shall become the property of CITY, whether the Project for which they are made is completed or not, shall become the property of CITY and shall be delivered by DESIGN/BUILD TEAM to Project Manager within fifteen (15) days of the receipt of the written notice of termination or upon completion of the Project. If applicable, CITY may withhold payments then due to DESIGN/BUILD TEAM until DESIGN/BUILD TEAM complies with the provisions of this section.

26.2 AUDIT RIGHT AND RETENTION OF RECORDS: CITY shall have the right to audit the books, records, and accounts of DESIGN/BUILD TEAM that are related to this Project. DESIGN/BUILD TEAM shall keep such books, records, and accounts as may be necessary in order to record complete and correct entries related to the Project. DESIGN/BUILD TEAM shall preserve and make available, at reasonable times for examination and audit by CITY, all financial records, supporting documents, statistical records, and any other documents pertinent to this Agreement for the required retention period of the Florida Public Records Act, Chapter 119, Florida Statutes, or, if the Florida Public Records Act is not applicable, for a minimum period of three (3) years after termination of this Agreement. If any audit has been initiated and audit findings have not been resolved at the end of the retention period or three (3) years, whichever is longer,

the books, records, and accounts shall be retained until resolution of the audit findings. If the Florida Public Records Act is determined by CITY to be applicable to DESIGN/BUILD TEAM's records, DESIGN/BUILD TEAM shall comply with all requirements thereof; however, no confidentiality or non-disclosure requirement of either federal or state law shall be violated by DESIGN-BUILD TEAM. Any incomplete or incorrect entry in such books, records, and accounts shall be a basis for CITY's disallowance and recovery of any payment upon such entry.

26.3 ARCHITECT/ENGINEER: DESIGN/BUILD FIRM shall use the architect/engineer, including subconsultants, identified in the proposal that were a material part of the selection of the DESIGN/BUILD TEAM to provide the services for this Project. DESIGN/BUILD FIRM shall obtain written approval of CITY's Public Works Director prior to changing or modifying the list of subconsultants submitted by the DESIGN/BUILD TEAM. The list of Architect/Engineer, including subconsultants, is provided on Exhibit B, as attached hereto and is made a part hereof.

26.4 ASSIGNMENT AND PERFORMANCE: Neither this Agreement nor any interest herein shall be assigned, transferred, or encumbered without the prior written consent of the other party.

26.5 COUNTERPARTS: This Agreement may be executed in three (3) counterparts, each of which shall be deemed to be an original.

26.6 ALL PRIOR AGREEMENTS SUPERSEDED: This Agreement incorporates and includes all prior negotiations, correspondence, conversations, agreements or understandings applicable to the matters contained herein; and the parties agree that there are no commitments, agreements or understandings concerning the subject matter of this Agreement that are not contained in this Agreement. Accordingly, the parties agree that no deviation from the terms hereof shall be predicated upon any prior representations or agreements whether oral or written.

26.7 AMENDMENTS: No modification, amendment, or alteration in the terms or conditions contained herein shall be effective unless contained in a written document executed by both parties with the same formality and of equal dignity herewith.

26.8 INDEPENDENT CONTRACTOR: DESIGN/BUILD FIRM is an independent contractor under this Agreement. Services provided by DESIGN/BUILD FIRM shall be subject to the supervision of DESIGN/BUILD FIRM. In providing the services, DESIGN/BUILD FIRM or its agents shall not be acting and shall not be deemed as acting as officers, employees, or agents of the CITY. No partnership, joint venture, or other joint relationship is created hereby. CITY does not extend to DESIGN/BUILD FIRM or its agents any authority of any kind to bind CITY in any respect whatsoever.

26.9 THIRD PARTY BENEFICIARIES: Neither DESIGN/BUILD FIRM or CITY intends to directly or substantially benefit a third party by this Agreement. The parties expressly acknowledge that it is not their intent to create any rights or obligations in any third person or entity under this Agreement. Therefore, the parties agree that there are no third party beneficiaries to this Agreement and that no third party shall be entitled to assert a claim against either of them based upon this Agreement.

26.10 WAIVER OF BREACH AND MATERIALITY: Failure by the CITY or DESIGN/BUILD FIRM to enforce any provision of this Agreement shall not be deemed a waiver of such provision or modification of this Agreement.

26.11 MATERIAL TERM: CITY and DESIGN/BUILD FIRM agree that each requirement, duty, and obligation set forth herein is substantial and important to the formation of this Agreement, and therefore, is a material term hereof.

26.12 COMPLIANCE WITH LAWS: DESIGN/BUILD FIRM shall comply with all federal, state, and local laws, codes, ordinances, rules and regulations in performing its duties, responsibilities, and obligations related to this Agreement.

26.13 NONDISCRIMINATION, EQUAL EMPLOYMENT OPPORTUNITY, AND AMERICANS WITH DISABILITIES ACT: DESIGN/BUILD FIRM shall not unlawfully discriminate against any person in its operations and activities in its use or expenditure of the funds or any portion of the funds provided by this Agreement and shall affirmatively comply with all applicable provisions of the Americans with Disabilities Act in the course of providing any services funded in whole or in party by CITY, including Titles 1 and 11 of the Act, and all applicable regulations, guidelines and standards.

DESIGN/BUILD FIRM's decisions regarding the delivery of work and services under this Agreement shall be made without regard to or consideration of race, age, religion, color, gender, sexual orientation, national origin, marital status, physical or mental disability, political affiliation, or any other factor which cannot be lawfully or appropriately used as a basis for service delivery.

DESIGN/BUILD FIRM shall comply with Title 1 of the Americans with Disabilities Act regarding nondiscrimination on the basis of disability in employment and further shall not discriminate against any employee or applicant for employment because of race, age, religion, color, gender, sexual orientation, national origin, marital status, political affiliation, or physical or mental disability. In addition, DESIGN/BUILD FIRM shall take affirmative steps to ensure nondiscrimination in employment against disabled persons. Such actions shall include, but not be limited to, the following: employment, upgrading, demotion, transfer, recruitment or recruitment advertising, layoff, termination,

rates of pay, other forms of compensation, terms and conditions of employment, training (including apprenticeship) and accessibility.

DESIGN/BUILD FIRM shall take affirmative action to ensure that applicants are employed and employees are treated without regard to race, age, religion, color, gender, sexual orientation, national origin, marital status, political affiliation, or physical or mental disability during employment. Such actions shall include, but not be limited to, the following: employment, upgrading, demotion, transfer, recruitment or recruitment advertising, layoff, termination, rates of pay, other forms of compensation, terms and conditions of employment, training (including apprenticeship) and accessibility.

26.14 PUBLIC ENTITY CRIMES ACT: In accordance with the Public Entity Crimes Act, Sec. 287.133, Florida Statutes, a person or affiliate who is a contractor, consultant or other provider, who has been placed on the convicted vendor list following a conviction for a Public Entity Crime, may not submit a bid on a contract to provide any goods or services to the CITY, may not submit a bid on a contract with the CITY for the construction or repair of a public building or public work, may not submit bids on leases of real property to the CITY, may not be awarded or perform work as a contractor supplier, Subcontractor or consultant under a contract with the CITY and may not transact any business with the CITY in excess of the threshold amount provided in Section 287.017, Florida Statutes, as amended, for category two purchases for a period of thirty-six (36) months from the date of being placed on the convicted vendor list. Violation of this section shall result in cancellation of the CITY purchase and may result in debarment.

26.15 SEVERENCE: In the event a portion of this Agreement is found by a court of competent jurisdiction to be invalid, the remaining provisions shall continue to be effective unless CITY elects to terminate this Agreement. The election to terminate this Agreement based upon this provision shall be made within seven (7) days after the finding by the court becomes final.

26.16 JOINT PREPARATION: Preparation of this Agreement has been a joint effort of the CITY and DESIGN/BUILD FIRM and the resulting document shall not, solely as a matter of judicial construction, be construed more severely against one of the parties than any other.

26.17 PRIORITY OF PROVISIONS: If there is a conflict or inconsistency between any term, statement, requirement, or provision of any exhibit attached hereto, any document or events referred to herein, or any document incorporated into this Agreement by reference and a term, statement, requirement, or provision of this Agreement, the term, statement, requirement, or provision contained in Articles 1 through 21 shall prevail and be given effect.

In the event of a conflict among the Contract Documents, the most stringent requirement shall control.

26.18 TAXES: DESIGN/BUILD FIRM shall pay all applicable sales, consumer, use and other taxes as required by law. DESIGN/BUILD FIRM is responsible for reviewing the pertinent state statutes involving state taxes and complying with all requirements.

All such taxes that are required as of the time of Agreement execution shall be included in the Guaranteed Maximum Price.

IN WITNESS OF THE FOREGOING, the parties have set their hands and seals the day and year first written above.

CITY OF FORT LAUDERDALE, a municipal corporation of the State of Florida.

By_____
JOHN P. "JACK" SEILER, Mayor

(CORPORATE SEAL)

ATTEST:

_____
JEFFREY A. MODARELLI, City Clerk

_____
LEE R. FELDMAN, City Manager

Approved as to form:

_____
RHONDA MONTOYA HASAN
Assistant City Attorney

DESIGN/BUILD FIRM

WITNESSES:

_____, INC.,
a _____ corporation (if not a Florida

corporation add: authorized to do business in Florida)

_____ By:_____

_____ _____

[Witness print/type name] [Print Name, check title]

☐ President ☐ Vice President

_____ ☐ Authorized Signatory (Please provide corporate authorization)

_____

[Witness print/type name] ATTEST:

(CORPORATE SEAL) _____

Secretary

_____

[Print Name]

STATE OF _____:

COUNTY OF _____:

The foregoing instrument was acknowledged before me this ____ day of _____, 2016, by _____ as _____ of _____, INC. a _____ corporation (if not a Florida corporation add: authorized to do business in Florida) authorized to do business in Florida, who is ☐ personally known to me or ☐ has produced _____ as identification.

(SEAL) _____

Notary Public, State of _____ (Signature of Notary Taking Acknowledgment)

_____

Name of Notary Typed, Printed or Stamped

My Commission Expires: _____

Commission Number: _____

CITY OF FORT LAUDERDALE
GENERAL CONDITIONS

These instructions are standard for all contracts for commodities or services issued through the City of Fort Lauderdale Procurement Services Division. The City may delete, supersede, or modify any of these standard instructions for a particular contract by indicating such change in the Invitation to Bid (ITB) Special Conditions, Technical Specifications, Instructions, Proposal Pages, Addenda, and Legal Advertisement. In this general conditions document, Invitation to Bid (ITB), Request for Qualifications (RFQ), and Request for Proposal (RFP) are interchangeable.

PART I BIDDER PROPOSAL PAGE(S) CONDITIONS:

1.01 BIDDER ADDRESS: The City maintains automated vendor address lists that have been generated for each specific Commodity Class item through our bid issuing service, BidSync. Notices of Invitations to Bid (ITB'S) are sent by e-mail to the selection of bidders who have fully registered with BidSync or faxed (if applicable) to every vendor on those lists, who may then view the bid documents online. Bidders who have been informed of a bid's availability in any other manner are responsible for registering with BidSync in order to view the bid documents. There is no fee for doing so. If you wish bid notifications be provided to another e-mail address or fax, please contact BidSync. If you wish purchase orders sent to a different address, please so indicate in your bid response. If you wish payments sent to a different address, please so indicate on your invoice.

1.02 DELIVERY: Time will be of the essence for any orders placed as a result of this ITB. The City reserves the right to cancel any orders, or part thereof, without obligation if delivery is not made in accordance with the schedule specified by the Bidder and accepted by the City.

1.03 PACKING SLIPS: It will be the responsibility **of** the awarded Contractor, to attach all packing slips to the OUTSIDE of each shipment. Packing slips must provide a detailed description of what is to be received and reference the City of Fort Lauderdale purchase order number that is associated with the shipment. Failure to provide a detailed packing slip attached to the outside of shipment may result in refusal of shipment at Contractor's expense.

1.04 PAYMENT TERMS AND CASH DISCOUNTS: Payment terms, unless otherwise stated in this ITB, will be considered to be net 45 days after the date of satisfactory delivery at the place of acceptance and receipt of correct invoice at the office specified, whichever occurs last. Bidder may offer cash discounts for prompt payment but they will not be considered in determination of award. If a Bidder offers a discount, it is understood that the discount time will be computed from the date of satisfactory delivery, at the place of acceptance, and receipt of correct invoice, at the office specified, whichever occurs last.

1.05 TOTAL BID DISCOUNT: If Bidder offers a discount for award of all items listed in the bid, such discount shall be deducted from the total of the firm net unit prices bid and shall be considered in tabulation and award of bid.

1.06 BIDS FIRM FOR ACCEPTANCE: Bidder warrants, by virtue of bidding, that the bid and the prices quoted in the bid will be firm for acceptance by the City for a period of one hundred twenty (120) days from the date of bid opening unless otherwise stated in the ITB.

1.07 VARIANCES: For purposes of bid evaluation, Bidder's must indicate any variances, no matter how slight, from ITB General Conditions, Special Conditions, Specifications or Addenda in the space provided in the ITB. No variations or exceptions by a Bidder will be considered or deemed a part of the bid submitted unless such variances or exceptions are listed in the bid and referenced in the space provided on the bidder proposal pages. If variances are not stated, or referenced as required, it will be assumed that the product or service fully complies with the City's terms, conditions, and specifications.

By receiving a bid, City does not necessarily accept any variances contained in the bid. All variances submitted are subject to review and approval by the City. If any bid contains material variances that, in the City's sole opinion, make that bid conditional in nature, the City reserves the right to reject the bid or part of the bid that is declared, by the City as conditional.

1.08 NO BIDS: If you do not intend to bid please indicate the reason, such as insufficient time to respond, do not offer product or service, unable to meet specifications, schedule would not permit, or any other reason, in the space provided in this ITB. Failure to bid or return no bid comments prior to the bid due and opening date and time, indicated in this ITB, may result in your firm being deleted from our Bidder's registration list for the Commodity Class Item requested in this ITB.

1.09 MINORITY AND WOMEN BUSINESS ENTERPRISE PARTICIPATION AND BUSINESS DEFINITIONS: The City of Fort Lauderdale wants to increase the participation of Minority Business Enterprises (MBE), Women Business Enterprises (WBE), and Small Business Enterprises (SBE) in its procurement activities. If your firm qualifies in accordance with the below definitions please indicate in the space provided in this ITB.

Minority Business Enterprise (MBE) "A Minority Business" is a business enterprise that is owned or controlled by one or more socially or economically disadvantaged persons. Such disadvantage may arise from cultural, racial, chronic economic

circumstances or background or other similar cause. Such persons include, but are not limited to: Blacks, Hispanics, Asian Americans, and Native Americans.

The term "Minority Business Enterprise" means a business at least 51 percent of which is owned by minority group members or, in the case of a publicly owned business, at least 51 percent of the stock of which is owned by minority group members. For the purpose of the preceding sentence, minority group members are citizens of the United States who include, but are not limited to: Blacks, Hispanics, Asian Americans, and Native Americans.

Women Business Enterprise (WBE) a "Women Owned or Controlled Business" is a business enterprise at least 51 percent of which is owned by females or, in the case of a publicly owned business, at least 51 percent of the stock of which is owned by females.

Small Business Enterprise (SBE) "Small Business" means a corporation, partnership, sole proprietorship, or other legal entity formed for the purpose of making a profit, which is independently owned and operated, has either fewer than 100 employees or less than $1,000,000 in annual gross receipts.

BLACK, which includes persons having origins in any of the Black racial groups of Africa.
WHITE, which includes persons whose origins are Anglo-Saxon and Europeans and persons of Indo-European decent including Pakistani and East Indian.
HISPANIC, which includes persons of Mexican, Puerto Rican, Cuban, Central and South American, or other Spanish culture or origin, regardless of race.
NATIVE AMERICAN, which includes persons whose origins are American Indians, Eskimos, Aleuts, or Native Hawaiians.
ASIAN AMERICAN, which includes persons having origin in any of the original peoples of the Far East, Southeast Asia, the Indian subcontinent, or the Pacific Islands.

1.10 MINORITY-WOMEN BUSINESS ENTERPRISE PARTICIPATION

It is the desire of the City of Fort Lauderdale to increase the participation of minority (MBE) and women-owned (WBE) businesses in its contracting and procurement programs. While the City does not have any preference or set aside programs in place, it is committed to a policy of equitable participation for these firms. Proposers are requested to include in their proposals a narrative describing their past accomplishments and intended actions in this area. If proposers are considering minority or women owned enterprise participation in their proposal, those firms, and their specific duties have to be identified in the proposal. If a proposer is considered for award, he or she will be asked to meet with City staff so that the intended MBE/WBE participation can be formalized and included in the subsequent contract.

1.11 SCRUTINIZED COMPANIES

Subject to *Odebrecht Construction, Inc., v. Prasad*, 876 F.Supp.2d 1305 (S.D. Fla. 2012), *affirmed*, *Odebrecht Construction, Inc., v. Secretary, Florida Department of Transportation*, 715 F.3d 1268 (11th Cir. 2013), with regard to the "Cuba Amendment," the Contractor certifies that it is not on the Scrutinized Companies with Activities in Sudan List or the Scrutinized Companies with Activities in the Iran Petroleum Energy Sector List or the Scrutinized Companies that Boycott Israel List created pursuant to Section 215.4725, Florida Statutes (2016), that it is not engaged in a boycott of Israel, and that it does not have business operations in Cuba or Syria, as provided in section 287.135, Florida Statutes (2016), as may be amended or revised. The City may terminate this Agreement at the City's option if the Contractor is found to have submitted a false certification as provided under subsection (5) of section 287.135, Florida Statutes (2016), as may be amended or revised, or been placed on the Scrutinized Companies with Activities in Sudan List or the Scrutinized Companies with Activities in the Iran Petroleum Energy Sector List or the Scrutinized Companies that Boycott Israel List created pursuant to Section 215.4725, Florida Statutes (2016), or is engaged in a boycott of Israel or has been engaged in business operations in Cuba or Syria, as defined in Section 287.135, Florida Statutes (2016), as may be amended or revised.

1.12 DEBARRED OR SUSPENDED BIDDERS OR PROPOSERS

The bidder or proposer certifies, by submission of a response to this solicitation, that neither it nor its principals and subcontractors are presently debarred or suspended by any Federal department or agency.

Part II DEFINITIONS/ORDER OF PRECEDENCE:

2.01 BIDDING DEFINITIONS The City will use the following definitions in its general conditions, special conditions, technical specifications, instructions to bidders, addenda and any other document used in the bidding process:
INVITATION TO BID (ITB) when the City is requesting bids from qualified Bidders.

REQUEST FOR PROPOSALS (RFP) when the City is requesting proposals from qualified Proposers.
REQUEST FOR QUALIFICATIONS (RFQ) when the City is requesting qualifications from qualified Proposers.
BID – a price and terms quote received in response to an ITB.
PROPOSAL – a proposal received in response to an RFP.
BIDDER – Person or firm submitting a Bid.
PROPOSER – Person or firm submitting a Proposal.
RESPONSIVE BIDDER – A person whose bid conforms in all material respects to the terms and conditions included in the ITB.
RESPONSIBLE BIDDER – A person who has the capability in all respects to perform in full the contract requirements, as stated in the ITB, and the integrity and reliability that will assure good faith performance.
FIRST RANKED PROPOSER – That Proposer, responding to a City RFP, whose Proposal is deemed by the City, the most advantageous to the City after applying the evaluation criteria contained in the RFP.
SELLER – Successful Bidder or Proposer who is awarded a Purchase Order or Contract to provide goods or services to the City.
CONTRACTOR – Successful Bidder or Proposer who is awarded a Purchase Order, award Contract, Blanket Purchase Order agreement, or Term Contract to provide goods or services to the City.
CONTRACT – A deliberate verbal or written agreement between two or more competent parties to perform or not to perform a certain act or acts, including all types of agreements, regardless of what they may be called, for the procurement or disposal of equipment, materials, supplies, services or construction.
CONSULTANT – Successful Bidder or Proposer who is awarded a contract to provide professional services to the City.
The following terms may be used interchangeably by the City: ITB and/or RFP; Bid or Proposal; Bidder, Proposer, or Seller; Contractor or Consultant; Contract, Award, Agreement or Purchase Order.

2.02 SPECIAL CONDITIONS: Any and all Special Conditions contained in this ITB that may be in variance or conflict with these General Conditions shall have precedence over these General Conditions. If no changes or deletions to General Conditions are made in the Special Conditions, then the General Conditions shall prevail in their entirety,

PART III BIDDING AND AWARD PROCEDURES:

3.01 SUBMISSION AND RECEIPT OF BIDS: To receive consideration, bids must be received prior to the bid opening date and time. Unless otherwise specified, Bidders should use the proposal forms provided by the City. These forms may be duplicated, but failure to use the forms may cause the bid to be rejected. Any erasures or corrections on the bid must be made in ink and initialed by Bidder in ink. All information submitted by the Bidder shall be printed, typewritten or filled in with pen and ink. Bids shall be signed in ink. Separate bids must be submitted for each ITB issued by the City in separate sealed envelopes properly marked. When a particular ITB or RFP requires multiple copies of bids or proposals they may be included in a single envelope or package properly sealed and identified. Only send bids via facsimile transmission (FAX) if the ITB specifically states that bids sent via FAX will be considered. If such a statement is not included in the ITB, bids sent via FAX will be rejected. Bids will be publicly opened in the Procurement Office, or other designated area, in the presence of Bidders, the public, and City staff. Bidders and the public are invited and encouraged to attend bid openings. Bids will be tabulated and made available for review by Bidder's and the public in accordance with applicable regulations.

3.02 MODEL NUMBER CORRECTIONS: If the model number for the make specified in this ITB is incorrect, or no longer available and replaced with an updated model with new specifications, the Bidder shall enter the correct model number on the bidder proposal page. In the case of an updated model with new specifications, Bidder shall provide adequate information to allow the City to determine if the model bid meets the City's requirements.

3.03 PRICES QUOTED: Deduct trade discounts, and quote firm net prices. Give both unit price and extended total. In the case of a discrepancy in computing the amount of the bid, the unit price quoted will govern. All prices quoted shall be F.O.B. destination, freight prepaid (Bidder pays and bears freight charges, Bidder owns goods in transit and files any claims), unless otherwise stated in Special Conditions. Each item must be bid separately. No attempt shall be made to tie any item or items contained in the ITB with any other business with the City.

3.04 TAXES: The City of Fort Lauderdale is exempt from Federal Excise and Florida Sales taxes on direct purchase of tangible property. Exemption **number for EIN is 59-6000319, and State Sales tax exemption number is 85-8013875578C-1.**

3.05 WARRANTIES OF USAGE: Any quantities listed in this ITB as estimated or projected are provided for tabulation and information purposes only. No warranty or guarantee of quantities is given or implied. It is understood that the Contractor will furnish the City's needs as they arise.

3.06 APPROVED EQUAL: When the technical specifications call for a brand name, manufacturer, make, model, or vendor catalog number with acceptance of APPROVED EQUAL, it shall be for the purpose of establishing a level of quality and features desired and acceptable to the City. In such cases, the City will be receptive to any unit that would be considered by qualified City personnel as an approved equal. In that the specified make and model represent a level of quality and features desired by the City, the Bidder must state clearly in the bid any variance from those specifications. It is the Bidder's responsibility to provide adequate information, in the bid, to enable the City to ensure that the bid meets the required criteria. If adequate information is not submitted with the bid, it may be rejected. The City will be the sole judge in determining if the item bid qualifies as an approved equal.

3.07 MINIMUM AND MANDATORY TECHNICAL SPECIFICATIONS: The technical specifications may include items that are considered minimum, mandatory, or required. If any Bidder is unable to meet or exceed these items, and feels that the technical specifications are overly restrictive, the bidder must notify the Procurement Services Division immediately. Such notification must be received by the Procurement Services Division prior to the deadline contained in the ITB, for questions of a material nature, or prior to five (5) days before bid due and open date, whichever occurs first. If no such notification is received prior to that deadline, the City will consider the technical specifications to be acceptable to all bidders.

3.08 MISTAKES: Bidders are cautioned to examine all terms, conditions, specifications, drawings, exhibits, addenda, delivery instructions and special conditions pertaining to the ITB. Failure of the Bidder to examine all pertinent documents shall not entitle the bidder to any relief from the conditions imposed in the contract.

3.09 SAMPLES AND DEMONSTRATIONS: Samples or inspection of product may be requested to determine suitability. Unless otherwise specified in Special Conditions, samples shall be requested after the date of bid opening, and if requested should be received by the City within seven (7) working days of request. Samples, when requested, must be furnished free of expense to the City and if not used in testing or destroyed, will upon request of the Bidder, be returned within thirty (30) days of bid award at Bidder's expense. When required, the City may request full demonstrations of units prior to award. When such demonstrations are requested, the Bidder shall respond promptly and arrange a demonstration at a convenient location. Failure to provide samples or demonstrations as specified by the City may result in rejection of a bid.

3.10 LIFE CYCLE COSTING: If so specified in the ITB, the City may elect to evaluate equipment proposed on the basis of total cost of ownership. In using Life Cycle Costing, factors such as the following may be considered: estimated useful life, maintenance costs, cost of supplies, labor intensity, energy usage, environmental impact, and residual value. The City reserves the right to use those or other applicable criteria, in its sole opinion that will most accurately estimate total cost of use and ownership.

3.11 BIDDING ITEMS WITH RECYCLED CONTENT: In addressing environmental concerns, the City of Fort Lauderdale encourages Bidders to submit bids or alternate bids containing items with recycled content. When submitting bids containing items with recycled content, Bidder shall provide documentation adequate for the City to verify the recycled content. The City prefers packaging consisting of materials that are degradable or able to be recycled. When specifically stated in the ITB, the City may give preference to bids containing items manufactured with recycled material or packaging that is able to be recycled.

3.12 USE OF OTHER GOVERNMENTAL CONTRACTS: The City reserves the right to reject any part or all of any bids received and utilize other available governmental contracts, if such action is in its best interest.

3.13 QUALIFICATIONS/INSPECTION: Bids will only be considered from firms normally engaged in providing the types of commodities/services specified herein. The City reserves the right to inspect the Bidder's facilities, equipment, personnel, and organization at any time, or to take any other action necessary to determine Bidder's ability to perform. The Procurement Director reserves the right to reject bids where evidence or evaluation is determined to indicate inability to perform.

3.14 BID SURETY: If Special Conditions require a bid security, it shall be submitted in the amount stated. A bid security can be in the form of a bid bond or cashier's check. Bid security will be returned to the unsuccessful bidders as soon as practicable after opening of bids. Bid security will be returned to the successful bidder after acceptance of the performance bond, if required; acceptance of insurance coverage, if required; and full execution of contract documents, if required; or conditions as stated in Special Conditions.

3.15 **PUBLIC RECORDS/TRADE SECRETS/COPYRIGHT:** The Proposer's response to the RFP is a public record pursuant to Florida law, which is subject to disclosure by the City under the State of Florida Public Records Law, Florida Statutes Chapter 119.07 ("Public Records Law"). The City shall permit public access to all documents, papers, letters or other material submitted in connection with this RFP and the Contract to be executed for this RFP, subject to the provisions of Chapter 119.07 of the Florida Statutes.

Any language contained in the Proposer's response to the RFP purporting to require confidentiality of any portion of the Proposer's response to the RFP, except to the extent that certain information is in the City's opinion a Trade Secret pursuant to Florida law, shall be void. If a Proposer submits any documents or other information to the City which the Proposer claims is Trade Secret information and exempt from Florida Statutes Chapter 119.07 ("Public Records Laws"), the Proposer shall clearly designate that it is a Trade Secret and that it is asserting that the document or information is exempt. The Proposer must specifically identify the exemption being claimed under Florida Statutes 119.07. The City shall be the final arbiter of whether any information contained in the Proposer's response to the RFP constitutes a Trade Secret. The city's determination of whether an exemption applies shall be final, and the proposer agrees to defend, indemnify, and hold harmless the city and the city's officers, employees, and agent, against any loss or damages incurred by any person or entity as a result of the city's treatment of records as public records. Proposals purporting to be subject to copyright protection in full or in part will be rejected.

EXCEPT FOR CLEARLY MARKED PORTIONS THAT ARE BONA FIDE TRADE SECRETS PURSUANT TO FLORIDA LAW, DO NOT MARK YOUR RESPONSE TO THE RFP AS PROPRIETARY OR CONFIDENTIAL. DO NOT MARK YOUR RESPONSE TO THE RFP OR ANY PART THEREOF AS COPYRIGHTED.

3.16 PROHIBITION OF INTEREST: No contract will be awarded to a bidding firm who has City elected officials, officers or

employees affiliated with it, unless the bidding firm has fully complied with current Florida State Statutes and City Ordinances relating to this issue. Bidders must disclose any such affiliation. Failure to disclose any such affiliation will result in disqualification of the Bidder and removal of the Bidder from the City's bidder lists and prohibition from engaging in any business with the City.

3.17 RESERVATIONS FOR AWARD AND REJECTION OF BIDS: The City reserves the right to accept or reject any or all bids, part of bids, and to waive minor irregularities or variations to specifications contained in bids, and minor irregularities in the bidding process. The City also reserves the right to award the contract on a split order basis, lump sum basis, individual item basis, or such combination as shall best serve the interest of the City. The City reserves the right to make an award to the responsive and responsible bidder whose product or service meets the terms, conditions, and specifications of the ITB and whose bid is considered to best serve the City's interest. In determining the responsiveness of the offer and the responsibility of the Bidder, the following shall be considered when applicable: the ability, capacity and skill of the Bidder to perform as required; whether the Bidder can perform promptly, or within the time specified, without delay or interference; the character, integrity, reputation, judgment, experience and efficiency of the Bidder; the quality of past performance by the Bidder; the previous and existing compliance by the Bidder with related laws and ordinances; the sufficiency of the Bidder's financial resources; the availability, quality and adaptability of the Bidder's supplies or services to the required use; the ability of the Bidder to provide future maintenance, service or parts; the number and scope of conditions attached to the bid.

If the ITB provides for a contract trial period, the City reserves the right, in the event the selected bidder does not perform satisfactorily, to award a trial period to the next ranked bidder or to award a contract to the next ranked bidder, if that bidder has successfully provided services to the City in the past. This procedure to continue until a bidder is selected or the contract is re-bid, at the sole option of the City.

3.18 LEGAL REQUIREMENTS: Applicable provisions of all federal, state, county laws, and local ordinances, rules and regulations, shall govern development, submittal and evaluation of all bids received in response hereto and shall govern any and all claims and disputes which may arise between person(s) submitting a bid response hereto and the City by and through its officers, employees and authorized representatives, or any other person, natural or otherwise; and lack of knowledge by any bidder shall not constitute a cognizable defense against the legal effect thereof.

3.19 BID PROTEST PROCEDURE: ANY PROPOSER OR BIDDER WHO IS NOT RECOMMENDED FOR AWARD OF A CONTRACT AND WHO ALLEGES A FAILURE BY THE CITY TO FOLLOW THE CITY'S PROCUREMENT ORDINANCE OR ANY APPLICABLE LAW MAY PROTEST TO THE DIRECTOR OF PROCUREMENT SERVICES DIVISION (DIRECTOR), BY DELIVERING A LETTER OF PROTEST TO THE DIRECTOR WITHIN FIVE (5) DAYS AFTER A NOTICE OF INTENT TO AWARD IS POSTED ON THE CITY'S WEB SITE AT THE FOLLOWING LINK: http://www.fortlauderdale.gov/purchasing/notices_of_intent.htm

THE COMPLETE PROTEST ORDINANCE MAY BE FOUND ON THE CITY'S WEB SITE AT THE FOLLOWING LINK: http://www.fortlauderdale.gov/purchasing/protestordinance.pdf

PART IV BONDS AND INSURANCE

4.01 PERFORMANCE BOND: If a performance bond is required in Special Conditions, the Contractor shall within fifteen (15) working days after notification of award, furnish to the City a Performance Bond, payable to the City of Fort Lauderdale, Florida, in the face amount specified in Special Conditions as surety for faithful performance under the terms and conditions of the contract. If the bond is on an annual coverage basis, renewal for each succeeding year shall be submitted to the City thirty (30) days prior to the termination date of the existing Performance Bond. The Performance Bond must be executed by a surety company of recognized standing, authorized to do business in the State of Florida and having a resident agent.

Acknowledgement and agreement is given by both parties that the amount herein set for the Performance Bond is not intended to be nor shall be deemed to be in the nature of liquidated damages nor is it intended to limit the liability of the Contractor to the City in the event of a material breach of this Agreement by the Contractor.

4.02 INSURANCE: If the Contractor is required to go on to City property to perform work or services as a result of ITB award, the Contractor shall assume full responsibility and expense to obtain all necessary insurance as required by City or specified in Special Conditions.

The Contractor shall provide to the Procurement Services Division original certificates of coverage and receive notification of approval of those certificates by the City's Risk Manager prior to engaging in any activities under this contract. The Contractors insurance is subject to the approval of the City's Risk Manager. The certificates must list the City as an ADDITIONAL INSURED for General Liability Insurance, and shall have no less than thirty (30) days written notice of cancellation or material change. Further modification of the insurance requirements may be made at the sole discretion of the City's Risk Manager if circumstances change or adequate protection of the City is not presented. Bidder, by submitting the bid, agrees to abide by such modifications.

PART V PURCHASE ORDER AND CONTRACT TERMS:

5.01 COMPLIANCE TO SPECIFICATIONS, LATE DELIVERIES/PENALTIES: Items offered may be tested for compliance to bid

specifications. Items delivered which do not conform to bid specifications may be rejected and returned at Contractor's expense. Any violation resulting in contract termination for cause or delivery of items not conforming to specifications, or late delivery may also result in:

- Bidders name being removed from the City's bidder's mailing list for a specified period and Bidder will not be recommended for any award during that period.
- All City Departments being advised to refrain from doing business with the Bidder.
- All other remedies in law or equity.

5.02 ACCEPTANCE, CONDITION, AND PACKAGING: The material delivered in response to ITB award shall remain the property of the Seller until a physical inspection is made and the material accepted to the satisfaction of the City. The material must comply fully with the terms of the ITB, be of the required quality, new, and the latest model. All containers shall be suitable for storage and shipment by common carrier, and all prices shall include standard commercial packaging. The City will not accept substitutes of any kind. Any substitutes or material not meeting specifications will be returned at the Bidder's expense. Payment will be made only after City receipt and acceptance of materials or services.

5.03 SAFETY STANDARDS: All manufactured items and fabricated assemblies shall comply with applicable requirements of the Occupation Safety and Health Act of 1970 as amended, and be in compliance with Chapter 442, Florida Statutes. Any toxic substance listed in Section 38F-41.03 of the Florida Administrative Code delivered as a result of this order must be accompanied by a completed Safety Data Sheet (SDS).

5.04 ASBESTOS STATEMENT: All material supplied must be 100% asbestos free. Bidder, by virtue of bidding, certifies that if awarded any portion of the ITB the bidder will supply only material or equipment that is 100% asbestos free.

5.05 OTHER GOVERNMENTAL ENTITIES: If the Bidder is awarded a contract as a result of this ITB, the bidder may, if the bidder has sufficient capacity or quantities available, provide to other governmental agencies, so requesting, the products or services awarded in accordance with the terms and conditions of the ITB and resulting contract. Prices shall be F.O.B. delivered to the requesting agency.

5.06 VERBAL INSTRUCTIONS PROCEDURE: No negotiations, decisions, or actions shall be initiated or executed by the Contractor as a result of any discussions with any City employee. Only those communications which are in writing from an authorized City representative may be considered. Only written communications from Contractors, which are assigned by a person designated as authorized to bind the Contractor, will be recognized by the City as duly authorized expressions on behalf of Contractors.

5.07 INDEPENDENT CONTRACTOR: The Contractor is an independent contractor under this Agreement. Personal services provided by the Proposer shall be by employees of the Contractor and subject to supervision by the Contractor, and not as officers, employees, or agents of the City. Personnel policies, tax responsibilities, social security, health insurance, employee benefits, procurement policies unless otherwise stated in this ITB, and other similar administrative procedures applicable to services rendered under this contract shall be those of the Contractor.

5.08 INDEMNITY/HOLD HARMLESS AGREEMENT: The Contractor agrees to protect, defend, indemnify, and hold harmless the City of Fort Lauderdale and its officers, employees and agents from and against any and all losses, penalties, damages, settlements, claims, costs, charges for other expenses, or liabilities of every and any kind including attorney's fees, in connection with or arising directly or indirectly out of the work agreed to or performed by Contractor under the terms of any agreement that may arise due to the bidding process. Without limiting the foregoing, any and all such claims, suits, or other actions relating to personal injury, death, damage to property, defects in materials or workmanship, actual or alleged violations of any applicable Statute, ordinance, administrative order, rule or regulation, or decree of any court shall be included in the indemnity hereunder.

5.09 TERMINATION FOR CAUSE: If, through any cause, the Contractor shall fail to fulfill in a timely and proper manner its obligations under this Agreement, or if the Contractor shall violate any of the provisions of this Agreement, the City may upon written notice to the Contractor terminate the right of the Contractor to proceed under this Agreement, or with such part or parts of the Agreement as to which there has been default, and may hold the Contractor liable for any damages caused to the City by reason of such default and termination. In the event of such termination, any completed services performed by the Contractor under this Agreement shall, at the option of the City, become the City's property and the Contractor shall be entitled to receive equitable compensation for any work completed to the satisfaction of the City. The Contractor, however, shall not be relieved of liability to the City for damages sustained by the City by reason of any breach of the Agreement by the Contractor, and the City may withhold any payments to the Contractor for the purpose of setoff until such time as the amount of damages due to the City from the Contractor can be determined.

5.10 TERMINATION FOR CONVENIENCE: The City reserves the right, in its best interest as determined by the City, to cancel contract by giving written notice to the Contractor thirty (30) days prior to the effective date of such cancellation.

5.11 CANCELLATION FOR UNAPPROPRIATED FUNDS: The obligation of the City for payment to a Contractor is limited to the availability of funds appropriated in a current fiscal period, and continuation of the contract into a subsequent fiscal period is subject to appropriation of funds, unless otherwise authorized by law.

5.12 RECORDS/AUDIT: The Contractor shall maintain during the term of the contract all books of account, reports and records in

accordance with generally accepted accounting practices and standards for records directly related to this contract. The Contractor agrees to make available to the City Auditor or designee, during normal business hours and in Broward, Miami-Dade or Palm Beach Counties, all books of account, reports and records relating to this contract should be retained for the duration of the contract and for three years after the final payment under this Agreement, or until all pending audits, investigations or litigation matters relating to the contract are closed, whichever is later.

5.13 PERMITS, TAXES, LICENSES: The successful Contractor shall, at their own expense, obtain all necessary permits, pay all licenses, fees and taxes, required to comply with all local ordinances, state and federal laws, rules and regulations applicable to business to be carried out under this contract.

5.14 LAWS/ORDINANCES: The Contractor shall observe and comply with all Federal, state, local and municipal laws, ordinances rules and regulations that would apply to this contract.

5.15 NON-DISCRIMINATION: There shall be no discrimination as to race, sex, color, creed, age or national origin in the operations conducted under this contract.

5.16 UNUSUAL CIRCUMSTANCES: If during a contract term where costs to the City are to remain firm or adjustments are restricted by a percentage or CPI cap, unusual circumstances that could not have been foreseen by either party of the contract occur, and those circumstances significantly affect the Contractor's cost in providing the required prior items or services, then the Contractor may request adjustments to the costs to the City to reflect the changed circumstances. The circumstances must be beyond the control of the Contractor, and the requested adjustments must be fully documented. The City may, after examination, refuse to accept the adjusted costs if they are not properly documented, increases are considered to be excessive, or decreases are considered to be insufficient. In the event the City does not wish to accept the adjusted costs and the matter cannot be resolved to the satisfaction of the City, the City will reserve the following options:

1. The contract can be canceled by the City upon giving thirty (30) days written notice to the Contractor with no penalty to the City or Contractor. The Contractor shall fill all City requirements submitted to the Contractor until the termination date contained in the notice.

2. The City requires the Contractor to continue to provide the items and services at the firm fixed (non-adjusted) cost until the termination of the contract term then in effect.

3. If the City, in its interest and in its sole opinion, determines that the Contractor in a capricious manner attempted to use this section of the contract to relieve them of a legitimate obligation under the contract, and no unusual circumstances had occurred, the City reserves the right to take any and all action under law or equity. Such action shall include, but not be limited to, declaring the Contractor in default and disqualifying him for receiving any business from the City for a stated period of time.

If the City does agree to adjusted costs, these adjusted costs shall not be invoiced to the City until the Contractor receives notice in writing signed by a person authorized to bind the City in such matters.

5.17 ELIGIBILITY: If applicable, the Contractor must first register with the Department of State of the State of Florida, in accordance with Florida State Statutes, prior to entering into a contract with the City.

5.18 PATENTS AND ROYALTIES: The Contractor, without exception, shall indemnify and save harmless the City and its employees from liability of any nature and kind, including cost and expenses for or on account of any copyrighted, patented or un-patented invention, process, or article manufactured or used in the performance of the contract, including its use by the City. If the Contractor uses any design, device, or materials covered by letters, patent or copyright, it is mutually agreed and understood without exception that the bid prices shall include all royalties or costs arising from the use of such design, device, or materials in any way involved in the work.

5.19 ASSIGNMENT: Contractor shall not transfer or assign the performance required by this ITB without the prior written consent of the City. Any award issued pursuant to this ITB, and the monies, which may become due hereunder, are not assignable except with the prior written approval of the City Commission or the City Manager or City Manager's designee, depending on original award approval.

5.20 LITIGATION VENUE: The parties waive the privilege of venue and agree that all litigation between them in the state courts shall take place in Broward County, Florida and that all litigation between them in the federal courts shall take place in the Southern District in and for the State of Florida.

5.21 LOCATION OF UNDERGROUND FACILITIES: If the Contractor, for the purpose of responding to this solicitation, requests the location of underground facilities through the Sunshine State One-Call of Florida, Inc. notification system or through any person or entity providing a facility locating service, and underground facilities are marked with paint, stakes or other markings within the City pursuant to such a request, then the Contractor, shall be deemed non-responsive to this solicitation in accordance with Section 2-184(5) of the City of Fort Lauderdale Code of Ordinances.

5.22 PUBLIC RECORDS

IF THE CONTRACTOR HAS QUESTIONS REGARDING THE APPLICATION OF CHAPTER 119, FLORIDA STATUTES, TO THE CONTRACTOR'S DUTY TO PROVIDE PUBLIC RECORDS RELATING TO THIS CONTRACT. CONTACT THE CUSTODIAN OF PUBLIC RECORDS AT: (954-828-5002, PRRCONTRACT@FORTLAUDERDALE.GOV, CITY CLERK'S OFFICE, 100 NORTH ANDREWS AVENUE, FORT LAUDERDALE, FLORIDA 33301)

Contractor shall:

1. Keep and maintain public records that ordinarily and necessarily would be required by the City in order to perform the service.

2. Upon request from the City's custodian of public records, provide the City with a copy of the requested records or allow the records to be inspected or copied within a reasonable time at a cost that does not exceed the cost provided in Chapter 119, Florida Statutes (2016), as may be amended or revised, or as otherwise provided by law.

3. Ensure that public records that are exempt or confidential and exempt from public records disclosure requirements are not disclosed except as authorized by law for the duration of the contract term and following completion of this contract if the Contractor does not transfer the records to the City.

4. Upon completion of the Contract, transfer, at no cost, to the City all public records in possession of the Contractor or keep and maintain public records required by the City to perform the service. If the Contractor transfers all public records to the City upon completion of this Contract, the Contractor shall destroy any duplicate public records that are exempt or confidential and exempt from public records disclosure requirements. If the Contractor keeps and maintains public records upon completion of this Contract, the Contractor shall meet all applicable requirements for retaining public records. All records stored electronically must be provided to the City, upon request from the City's custodian of public records, in a format that is compatible with the information technology systems of the City.

5

NON-COLLUSION STATEMENT:

By signing this offer, the vendor/contractor certifies that this offer is made independently and free from collusion. Vendor shall disclose below any City of Fort Lauderdale, FL officer or employee, or any relative of any such officer or employee who is an officer or director of, or has a material interest in, the vendor's business, who is in a position to influence this procurement.

Any City of Fort Lauderdale, FL officer or employee who has any input into the writing of specifications or requirements, solicitation of offers, decision to award, evaluation of offers, or any other activity pertinent to this procurement is presumed, for purposes hereof, to be in a position to influence this procurement.

For purposes hereof, a person has a material interest if they directly or indirectly own more than 5 percent of the total assets or capital stock of any business entity, or if they otherwise stand to personally gain if the contract is awarded to this vendor.

In accordance with City of Fort Lauderdale, FL Policy and Standards Manual, 6.10.8.3,

3.3. City employees may not contract with the City through any corporation or business entity in which they or their immediate family members hold a controlling financial interest (e.g. ownership of five (5) percent or more).

3.4. Immediate family members (spouse, parents and children) are also prohibited from contracting with the City subject to the same general rules.

Failure of a vendor to disclose any relationship described herein shall be reason for debarment in accordance with the provisions of the City Procurement Code.

NAME	RELATIONSHIPS

In the event the vendor does not indicate any names, the City shall interpret this to mean that the vendor has indicated that no such relationships exist.

6

3 4

QUESTIONNAIRE SHEET

PLEASE PRINT OR TYPE:

Firm Name:

President

Business Address:

Telephone: Fax:

E-Mail Address:

What was the last project of this nature which you completed?

The following are named as three corporations and representatives of those corporations for which you have performed work and which the City may contact as your references (include addresses, e-mail and telephone numbers):

How many years has your organization been in business?

Have you ever failed to complete work awarded to you; if so, where and why?

The name of the qualifying agent for the firm and his position is:

Certificate of Competency Number of Qualifying Agent:

Effective Date: Expiration Date:

Licensed in: Contractor's License/Certification #
(County/State)

Expiration Date:

NOTE: Contractor must have proper licensing prior to submitting bid and must submit evidence of same with bid.

To be considered for award of this contract, the bidder must submit a financial statement upon request.

QUESTIONNAIRE SHEET

1. Have you personally inspected the proposed work and have you a complete plan for its performance?

2. Will you sublet any part of this work? If so, list the portions or specialties of the work that you will.

a) mm

b)

c)

d)

e)

f)

g)

3. What equipment do you own that is available for the work?

4. What equipment will you purchase for the proposed work?

5. What equipment will you rent for the proposed work?

5

6

6

5

CITY OF FORT LAUDERDALE
PUBLIC WORKS DEPARTMENT

MINORITY BUSINESS ENTERPRISE (MBE) - WOMEN BUSINESS ENTERPRISE (WBE)

PRIME CONTRACTOR IDENTIFICATION FORM

In order to assist us in identifying the status of those companies doing business with the City of Fort Lauderdale, this form must be completed and returned with your bid package.

Name of Firm:

Address of Firm:

Telephone Number:

Name of Person Completing Form:

Title:

Signature:

Date:

City Project Number:

City Project Description:

Please check the item(s) which properly identify the status of your firm:

☐ Our firm is not a MBE or WBE.

☐ Our firm is a MBE, as at least 51 percent is owned and operated by one or more socially and economically disadvantaged individuals.

☐ American Indian ☐ Asian ☐ Black ☐ Hispanic

☐ Our firm is a WBE, as at least 51 percent is owned and operated by one or more women.

☐ American Indian ☐ Asian ☐ Black ☐ Hispanic

MBE/WBE CONTRACTOR INFORMATION

The City, in a continuing effort, is encouraging the increased participation of minority and women-owned businesses in Public Works Department related contracts. Along those lines, we are requiring that each firm provide documentation detailing their own programs for utilizing minority and women-owned businesses.

Submit this information as a part of this bid package and refer to the checklist, to ensure that all areas of concern are covered. The low responsive bidder may be contacted to schedule a meeting to discuss these objectives. It is our intention to proceed as quickly as possible with this project, so your cooperation in this matter is appreciated.

CONTRACTOR CHECKLIST

☐ List Previous City of Fort Lauderdale Contracts

☐ Number of Employees in your firm

--Percent (%) Women

--Percent (%) Minorities

--Job Classifications of Women and Minorities

☐ Use of minority and/or women subcontractors on past projects.

☐ Nature of the work subcontracted to minority and/or women-owned firms.

☐ How are subcontractors notified of available opportunities with your firm?

☐ Anticipated amount to be subcontracted on this project.

☐ Anticipated amount to be subcontracted to minority and/or women-owned businesses on this project.

CONSTRUCTION BID CERTIFICATION

Please Note: All fields below must be completed. If the field does not apply to you, please note N/A in that field. If you are a foreign corporation, you may be required to obtain a certificate of authority from the department of state, in accordance with Florida Statute §607.1501 (visit http://www.dos.state.fl.us/).

Company: (Legal Registration)

Address:

City: State: Zip:

Telephone No. FAX No. Email:

Does your firm qualify for MBE or WBE status: MBE ☐ WBE ☐

If a corporation, state the name of the President, Secretary and Resident Agent. If a partnership, state the names of all partners. If a trade name, state the names of the individuals who do business under the trade name.

Name	**Title**	**Name**	**Title**
Name	**Title**	**Name**	**Name**

ADDENDUM ACKNOWLEDGEMENT - Bidder acknowledges that the following addenda have been received and are included in the bid:

Addendum No.	Date Received	Addendum No.	Date Received	Addendum No.	Date Received	Addendum No.	Date Received

VARIANCES: If you take exception or have variances to any term, condition, specification, or requirement in this bid you must specify such variance in the space provided below or reference in the space provided below all variances contained on other pages within your bid. Additional pages may be attached if necessary. No variances will be deemed to be part of the bid submitted unless such is listed and contained in the space provided below. The City does not, by virtue of submitting a variance, necessarily accept any variances. If no statement is contained in the below space, it is hereby implied that your response is in full compliance with this competitive solicitation. If you do not have variances, simply mark N/A. If submitting your response electronically through BIDSYNC you must also click the "Take Exception" button.

The below signatory affirms that he has or will obtain all required permits and licenses from the appropriate agencies, and that his firm is authorized to do business in the State of Florida. The below signatory agrees to furnish all labor, tools, material, equipment and supplies, and to sustain all the expense incurred in doing the work set forth in strict accordance with the bid plans and contract documents at the unit prices indicated if awarded a contract. The below signatory has not divulged to, discussed, or compared this bid with other bidders, and has not colluded with any other bidder or parties to this bid whatsoever. Furthermore, the undersigned guarantees the truth and accuracy of all statements and answers contained in this bid. The below signatory also hereby agrees, by virtue of submitting or attempting to submit a bid, that in no event shall the City's liability for bodder's direct, indirect, incidental, consequential, special or exemplary damages, expenses, or lost profits arising out of this competitive solicitation process, including but not limited to public advertisement, bid conferences, site visits, evaluations, oral presentations, or award proceedings exceed the amount of Five Hundred Dollars ($500.00). This limitation shall not apply to claims arising under any provision of indemnification or the City protest ordinance contained in this competitive solicitation.

Submitted by:

Name (printed)	Signature
Date:	Date:

CONTRACTOR'S CERTIFICATE OF COMPLIANCE WITH NON-DISCRIMINATION PROVISIONS OF THE CONTRACT

The completed and signed form should be returned with the Contractor's submittal. If not provided with submittal, the Contractor must submit within three business days of City's request. Contractor may be deemed non-responsive for failure to fully comply within stated timeframes.

Pursuant to City Ordinance Sec. 2-17(a)(i)(ii), bidders must certify compliance with the Non-Discrimination provision of the ordinance.

(a) Contractors doing business with the City shall not discriminate against their employees based on the employee's race, color, religion, gender (including identity or expression), marital status, sexual orientation, national origin, age, disability or any other protected classification as defined by applicable law.

Contracts. Every Contract exceeding $100,000, or otherwise exempt from this section shall contain language that obligates the Contractor to comply with the applicable provisions of this section.

The Contract shall include provisions for the following:

(i) The Contractor certifies and represents that it will comply with this section during the entire term of the contract.

(ii) The failure of the Contractor to comply with this section shall be deemed to be a material breach of the contract, entitling the City to pursue any remedy stated below or any remedy provided under applicable law.

Authorized Signature

Print Name and Title

Date

CONTRACT PAYMENT METHOD BY P-CARD

THIS FORM MUST BY SUBMITTED WITH YOUR RESPONSE

The City of Fort Lauderdale has implemented a Procurement Card (P-Card) program which changes how payments are remitted to its vendors. The City has transitioned from traditional paper checks to payment by credit card via MasterCard or Visa. This allows you as a vendor of the City of Fort Lauderdale to receive your payment fast and safely. No more waiting for checks to be printed and mailed.

Payments will be made utilizing the City's P-Card (MasterCard or Visa). Accordingly, firms must presently have the ability to accept credit card payment or take whatever steps necessary to implement acceptance of a credit card before the commencement of a contract.

Please indicate which credit card payment you prefer:

☐ Master Card

☐ Visa Card

Company Name: _____

Name (Printed) _____ Signature _____

Date: _____ Title _____

LOCAL BUSINESS PRICE PREFERENCE CERTIFICATION STATEMENT

The Business identified below certifies that it qualifies for the local business price preference classification as indicated herein, and further certifies and agrees that it will re-affirm its local preference classification annually no later than thirty (30) calendar days prior to the anniversary of the date of a contract awarded pursuant to this ITB. Violation of the foregoing provision may result in contract termination.

(1) _____ Business Name

is a **Class A** Business as defined in City of Fort Lauderdale Ordinance No. C-17-26, Sec.2-186. A copy of the City of Fort Lauderdale current year Business Tax Receipt **and** a complete list of full-time employees and evidence of their addresses shall be provided within 10 calendar days of a formal request by the City.

(2) _____ Business Name

is a **Class B** Business as defined in the City of Fort Lauderdale Ordinance No. C-17-26, Sec.2-186. A copy of the Business Tax Receipt **or** a complete list of full-time employees and evidence of their addresses shall be provided within 10 calendar days of a formal request by the City.

(3) _____ Business Name

is a **Class C** Business as defined in the City of Fort Lauderdale Ordinance No. C-17-26, Sec.2-186. A copy of the Broward County Business Tax Receipt shall be provided within 10 calendar days of a formal request by the City.

(4) _____ Business Name

requests a **Conditional Class A** classification as defined in the City of Fort Lauderdale Ordinance No. C-17-26, Sec.2-186. Written certification of intent shall be provided within 10 calendar days of a formal request by the City.

(5) _____ Business Name

requests a **Conditional Class B** classification as defined in the City of Fort Lauderdale Ordinance No. C-17-26, Sec.2-186. Written certification of intent shall be provided within 10 calendar days of a formal request by the City.

(6) _____ Business Name

is considered a **Class D** Business as defined in the City of Fort Lauderdale Ordinance No. C-17-26, Sec.2-186 and does not qualify for Local Preference consideration.

BIDDER'S COMPANY: _____

AUTHORIZED COMPANY PERSON: _____ _____ _____

Question and Answers for Bid #12072-483 - Fort Lauderdale Aquatic Center Renovation

Overall Bid Questions
There are no questions associated with this bid.