Contractor furnished mechanical lugs suitable for proper connections with the quantities and sizes of the generator AC power conductors / conduits as shown on the Contract Drawings.

5. The generator shall have separated AC and DC low voltage terminal connection areas with suitably numbered terminal strip for all required wiring interconnections. wiring points for remote low AC and DC control voltage interconnections between the generator set and remote equipment shall be through a single junction box connection mounted on the side of the generator housing by the Manufacturer with installed and numbered terminal strips and terminal connections for all field interconnections.

6. The generator shall be equipped by the generator Manufacturer with an internally installed UL Listed 120 Volt AC single-phase alternator anti-condensation space heater appropriately sized to minimize condensation while the generator set is not operating. The heater shall be capable of easy mounting in the assembled generator and shall be field replaceable. The generator space heater shall be energized when the generator is idle and automatically cut off when the generator is running via generator controls. AC service power for the heater shall be wired to the enclosure installed AC load center by the enclosure manufacturer.

G. Generator Associated Controls:

1. The generator voltage regulator shall be furnished and installed in the generator by the engine generator Manufacturer and shall be automatic to maintain generator output voltage by controlling the current applied to the exciter field of the generator during generator set operation at all levels of the generator's operating range.

2. The generator set shall include an automatic voltage regulation system in a moisture proof assembly that is matched and prototype tested by the engine manufacturer with the generating system provided. Adjustments shall be broad range, and manual voltage level adjustment means shall be provided on the generator control panel face. Regulation shall be less than +/- 1 % no load to full load at steady state operation. Telephone Influence Factor (TIF) shall be less than 50. The supplied voltage regulator shall be tested with the furnished generator set at the Manufacturer's Factory during the Factory generator set testing as specified herein prior to Factory shipment.

3. Sustained Short Circuit: A permanent magnetic generator excitation system shall be provided on the generator by the generator manufacturer which shall be capable of maintaining field forcing of the generator in order to sustain 300% of rated generator current for 10 seconds when a 3 phase symmetrical short circuit is applied at the generator terminals permitting the generator breaker to trip open.

4. All wiring points for remote low AC and DC control voltage interconnections between the generator set and remote equipment shall be through a single junction box mounted on the side of the generator housing by the manufacturer with numbered terminal strips for all field interconnection wiring. The junction box shall have provisions for bottom conduit / power conductor entry.

2.05 GENERATOR OUTDOOR WEATHER PROTECTIVE SOUND ATTENUATED ENCLOSURE

A. ENGINE-GENERATOR BASE AND ENCLOSURE FLOOR

1. The engine, generator and radiator shall be mounted by the engine generator set manufacturer on top of a structural steel mounting support base to maintain generator set assembled rigidity and alignment. The engine-generator set and mounting base set shall then be installed on top of the outdoor enclosure structural steel construction mounting base frame with steel floor furnished by the enclosure manufacturer. The mounting base frame shall be designed and constructed to adequately support the static and dynamic weight of the generator set, the outdoor generator set equipment enclosure, and all miscellaneous accessory equipment items installed inside of the outdoor enclosure.

2. The generator set and outdoor weather protective enclosure assembly shall offer protection as specified by OSHA from all moving and hot parts of the engine, generator and radiator. The generator equipment weather protective enclosure as constructed and installed on top of the steel frame mounting base / floor shall allow full access to the engine, generator and radiator and interior installed accessory equipment items for proper operation, maintenance, and typical service actions.

3. The engine and generator shall be assembled by the engine generator set manufacturer on a fabricated common structural steel generator set mounting base. The base shall be constructed of heavy-duty structural steel designed and built to resist deflection and maintain alignment during skidding, lifting, generator set operation, and minimize resonant linear vibration during any range of generator set operation.

4. The generator set mounting base shall be designed and constructed to prevent unit deflection during the entire range of generator set operation designed as a package to be mounted on a level foundation surface.

5. The generator set shall be furnished with an appropriate quantity of generator manufacturer supplied vibration isolators to be installed between the engine generator set and it's generator set mounting rails which shall be bolt secured to the top of the outdoor enclosure mounting base floor Use of elastomeric pad or linear mount type vibration isolators in lieu of steel spring type isolators shall be acceptable.

6. The outdoor generator enclosure is to be furnished with an installed structural steel continuous steel floor foundation structurally designed and manufactured so as to support the weight of the enclosure, the installed generator set, and all generator set and enclosure accessory equipment items. The generator set shall be installed inside of the outdoor enclosure and bolt secured the top of the enclosure floor by the enclosure manufacturer prior to delivery to the site. The floor shall be constructed so as to dampen the transmission of destructive or harmful vibrations produced by the operating generator set, be removable from the enclosure, and shall allow lifting of the complete enclosure package with the generator set and all equipment installed. Provide suitably sized and support installed lifting rings or / eyelet plates on the outside of the floor base for four (4) point lifting of the entire assembled package.

The floor lifting means shall be physically located, relative to center of gravity of the assembled generator set / enclosure package, so as to allow crane single point with spreader bar lifting of the assembled package. The floor is to be properly cleaned, primed, and finish coated with weather resistant protective paint, both on top and the bottom. The enclosure steel floor shall be cleaned, primed, and finish painted with black satin enamel. Furnish suitably sized rectangular free air space stub up opening in the floor for bottom entry routing of generator electrical AC power conductors and conduits for connection to the generator set mounted circuit breaker junction box, and separate stub up openings for bottom entry of all required commercial AC service and DC/ AC control and remote annunciation interface wiring and conduit requirements.

7. The enclosure floor sides shall be constructed of steel I-Beams, minimum of 12 inches high and an appropriate quantity of cross support channels installed across the width of the floor underneath the generator mounting diamond plate steel floor in adequate locations. The mounting base shall be abrasive blast cleaned and shall be properly surface prepared and finish coated with Two Part Epoxy primer and painted Gloss Black in color.

8. The mounting base frame shall incorporate suitable internal stiffeners to create a smooth floor top surface and to limit the accumulation of water. The mounting floor shall be constructed with no sharp edges to insure uniform coating coverage on all surfaces. No external support beams shall be permitted on top of the tank

9. The mounting base frame base shall be constructed of structural steel and furnished as specified herein. The base frame shall be designed to rigidly support the static and dynamic weight of the engine-generator set and outdoor enclosure and all internal installed accessory equipment items. The mounting base frame shall also withstand the effects of synchronous vibration of the engine and generator. The mounting base frame shall be provided with suitable mounting holes for foundation anchor securement.

10. The steel frame mounting shall be provided with a rectangular free air space opening to be located directly under the installed generator set AC power connection junction box and an opening for wiring / conduit stub up of AC service power and Dc control interface wiring.

11. Provide mounting means and hardware on the top of the enclosure mounting base to install the generator set and the outdoor enclosure to the top of the base frame. Enclosure mounting frame bases requiring beams across the top to transfer the generator weight to the outer rails for support will not be acceptable.

12. The enclosure mounting frame base shall be provided with appropriate quantity of earthquake/hurricane resistant tie down restraint mounting points in adequate locations as required to support the structural steel base, the furnished generator set, and outdoor enclosure as an assembled package on the site foundation. The mounting frame base construction shall provide a means to control moisture accumulation under the base frame, and to allow visual fuel leakage inspection. The mounting support base frame shall be provided with mounting holes on both sides to allow for adequate securing of the base frame assembly onto the site's mounting

foundation. Provide a drawing indicating dimensional locations for mounting frame base foundation mounting securing points and recommended securement means.

13. The Installing Contractor shall be responsible to furnish all required mounting base frame to foundation mounting and securement hardware and installation services to properly install and secure the enclosure and mounting base frame onto the site's existing concrete foundation, provided it has been confirmed that the existing foundation is suitable for use with mounting of the generator set and enclosure equipment.

14. The Installing Contractor shall ensure that the site generator equipment foundation surface that the generator set equipment shall be installed upon shall be level at all locations on the foundation prior to installation of the outdoor enclosure equipment. Advise the Engineer of any foundation irregularities.

15. The Installing Contractor shall install the complete structural steel mounting frame base, generator set and outdoor enclosure as a packaged assembly on the site, as coordinated with and in accordance with the outdoor enclosure manufacturer's instructions.

16. The construction and size of the enclosure structural steel mounting base frame shall be coordinated with the Project Basis of Design and construction of the outdoor enclosure and furnished by the generator supplier as designed and manufactured by Coastline Power Solutions located in Deland, Florida, Fidelity Manufacturing located in Ocala, Florida, or approved equal. Detailed documentation and certifications by the enclosure manufacturer and generator supplier (EG vendor) indicating complete compliance with these Specifications and the Drawings are to be included in the EG vendor's submitted Shop Drawing Submittals and on the final generator equipment operating and maintenance manual documentation furnished to the Owner.

B. OUTDOOR ENCLOSURE

1. The generator supplier shall furnish one (1) reach-in type, aluminum construction, sound attenuated, wind and flying debris / large missile impact resistant outdoor weather protective enclosure to completely enclose the generator set and additional generator system auxiliary equipment as specified herein. The generator set and outdoor enclosure are to be installed and secured on top of a continuous floor type structural steel mounting frame base. The enclosure shall be sized large enough so as to allow operating and maintenance personnel adequate reach-in access to all of the enclosure installed generator set and accessory equipment items for operation and for normal maintenance purposes, including ready access to all fuses, circuit breakers, switches, batteries, and all manually operable devices, and shall provide all NEC and OSHA required installations and clearances. The engine exhaust silencer shall be mounted inside of the enclosure, no exceptions.

2. The enclosure and engine-generator set and structural steel frame base assembled package shall be complete in every detail and ready for operation after site installation. The enclosure exterior shall be finish coated white in color. The base frame shall be finish painted black in color. The enclosure is to be provided with a means for securely attaching the entire enclosure structure to the steel frame mounting base. The entire package shall be completely and securely assembled and all outdoor enclosure and/ generator set equipment wiring and

piping terminated in place by the enclosure manufacturer prior to shipment. And delivery to the Project site. The enclosure shall be provided with separate lifting provisions which shall have sufficient capacity suitable for lifting and rigging the entire enclosure assembly.

3. The entire generator set outdoor enclosure, installed generator set and mounting base frame assembly shall be manufactured in compliance with the National Electrical Code (NEC) and the National Fire Protection Association (NFPA). The enclosure Components Shall be Registered with the State of Florida and have approval numbers to certify the enclosure meets the requirements of the Florida Building Code. The furnished enclosure shall bear approved Florida Department of Business and Professional Development (DBPR) Modular Building Insignia.

4. The enclosure and mounting base frame assembly shall conform to the specified equipment design criteria. The generator enclosure package manufacturer shall provide calculations and written stamped certification by a Professional Engineer (P. E.), licensed in the state of Florida indicating that the furnished generator set enclosure is designed and constructed to meet the specified 200 mph wind rating and the applicable wind resistance requirements of ASCE 7-10 and the Florida Building Code (FBC) including the 2012 FBC supplement, the 2014 fifth edition of the FBC. As well as the 2017 FBC edition. Provide three (3) original copies the P.E. stamped certified wind load calculations and report, and enclosure drawings indicating compliance for the specific designed generator outdoor enclosure to be furnished for this Project prior to site delivery of the equipment. Copies of the P.E. calculations report and certification and P.E. stamped drawings are to be included in the Manufacturer's enclosure parts, operation and maintenance manuals to be furnished for the generator system.

5. The entire generator set outdoor enclosure and mounting base package with installed generator set assembly design and construction shall be in compliance with the National Electrical Code (NEC), the National Fire Protection Association (NFPA), and Occupational Safety and Health Administration (OSHA) including physical space clearances and protection around all electrical and mechanical equipment. The enclosure assembly shall conform to the equipment design criteria as specified herein and as shown on the Drawings. In addition, the enclosure manufacturer shall be listed as an approved vendor by the Florida Department of Business and Professional Development (DBPR) Modular Building Insignia The manufacturer's enclosure design to be furnished shall have been physically tested to demonstrate compliance by a State of Florida approved independent testing laboratory. Proof of the enclosure manufacturer's listing and enclosure construction design compliance with these requirements shall be included in the Shop Drawing Submittals, no exceptions.

6. The enclosure design and construction must comply with the requirements of these Specifications and with the requirements of the Florida Building Code (FBC). The enclosure shall be certified by a Professional Engineer (P. E.) that must be licensed in the state of Florida, to be designed and constructed to withstand a constant wind load resistance up to 180 MPH, shall be capable of withstanding a 200 MPH ultimate wind speed gust for three (3) seconds, with Exposure C criteria as per ASCE 7- 10 with FBC 2012 supplement, the 2014 fifth edition of the FBC, and the 2017 FBC edition. This 200 MPH wind loading resistance capability for the enclosure shall be included on the shop drawings. The enclosure shall be certified by the enclosure manufacturer to meet the Miami Dade County High Velocity Hurricane Zone (HVHZ) missile impact ratings and compliances under Miami Dade Regulations no. 1624.2, 1626.2–1626.2.4, and section no. 1626 of the Florida Building Code. Enclosure equipment not complying with these construction and compliance requirements shall not be acceptable and shall be rejected in their entirety.

7. The outdoor enclosure shall be designed and constructed to reduce the average overall source noise / sound pressure level on the A scale produced by the furnished generator set operating at any range from no load to full rated load and rated speed as specified herein by a minimum level of 25 dB(A), reference 21 micro-newtons per square meter, at a distance of one (1) meter in a free field environment in any direction from the generator set weather protective enclosure at an elevation of 5 feet above ground level, measured in accordance with NEMA standards. This equipment compliance requirement shall be indicated on the enclosure manufacturer's drawings.

8. Enclosure construction shall include individual components generally consisting of a roof, two (2) side walls, and two (2) end walls using pre-painted white epoxy formed aluminum, enclosure mounted and secured intake and discharge openings. Fiberglass or equivalent non-asbestos acoustical insulation and securement linings on the interior walls of the enclosure shall be provided, and all exterior hardware shall be stainless steel. The complete exterior of the enclosure shall be painted white in color with urethane finish. Furnish the enclosure designed and constructed as specified herein and as shown on the Drawings.

9. All exposed metal parts of the enclosure and appurtenances shall be sanded, cleaned and primed with a rust inhibitor finished in a durable machinery enamel of the manufacturer's standard color. All necessary field touch-up shall be provided to have a complete finished appearance at the final inspection. All furnished outdoor components shall be suitable for outdoor installation without need for any additional protection from the weather.

10. The roof shall be constructed of 5052 – H32 marine grade mill finish 0.090 in. minimum thickness formed aluminum panels using an interlocking seam design. Roof shall be designed and constructed to support no less than 30 pounds per square foot. The roof top skin shall be painted the same color (white) as the enclosure. The roof is to be bolted to both side and end walls to form a complete weather and wind resistance assembly. A weatherproof mastic / sealant shall be used along the roof perimeter and any roof skin joints. All external roof attaching hardware shall be stainless steel screw type mechanical fastener utilizing neoprene watertight washers. Roof assembly shall be peaked to aid in rainwater runoff. Cambered roof designs and roofs with thicknesses of less than 0.090" nominally shall not be considered. Roof assemblies are to be mechanically fastened to the vertical wall sections. Glued or crimped roofs shall not be allowed nor considered as an acceptable alternative.

11. The generator set exhaust piping shall be vertically terminated through the roof of the outdoor enclosure. Generator set aftertreatment / catalyst and exhaust silencer equipment shall be installed inside of the enclosure with no exceptions on this requirement being allowed. Exhaust catalyst and silencer equipment mounting hardware shall maintain the weatherproof integrity of the enclosure system. The enclosure roof shall incorporate an internally installed and removable aluminum or stainless steel construction rain collar and rain shield for the generator exhaust silencer piping at the roof penetration point to prevent the entry of rainwater into the enclosure and allow for expansion and vibration of the exhaust piping without stress to the exhaust system. Rain shields shall be designed and furnished as a circular fabricated part that does not require hole indexing by the installing Contractor during site installation. An exhaust piping aluminum construction counter weighted rain cap shall be installed on the vertical discharge piping termination points of the exhaust gases.

12. The enclosure side and end walls shall be manufactured utilizing formed 0.090 inch minimum thickness prepainted aluminum formed panels utilizing an interlocking seam

design. Framing shall be incorporated in the panels by forming an open back box structure. Skin material shall be minimum thickness .090" marine grade aluminum. Enclosure shall have a prepainted Urethane finish for maximum corrosion resistance. Exterior skin panels shall be integral to the wall structure and not separate pieces riveted onto framing members. Wall panels shall be no wider than 36" each and shall be removable without the use of special tools. Wall and roof panels shall be designed so that field replacement can be accomplished without disassembly of the entire structure if damage or replacement actions should occur.

13. All external attaching hardware shall be stainless steel screw type mechanical fasteners. The enclosure shall be fastened to the enclosure mounting base frame by the enclosure manufacturer by means of an aluminum base channel and stainless steel hardware and clips that are welded to the mounting frame base and bolted to the base channel with stainless steel bolts, washers, and nuts. The base channel shall include enclosure water drainage construction.

14. The radiator discharge end wall section shall incorporate a properly sized opening for the furnished generator set radiator discharge core / opening and shall include appropriately furnished and installed shroud or baffle assemblies to prevent the recirculation of radiator discharge air into the enclosure.

15. Thermal acoustic insulation of non-asbestos material or fiberglass insulation, with fire retardant properties shall be installed on all interior walls and ceiling roof of the enclosure. Insulation shall not be less than two (2) inches in thickness. Acoustical insulation material on interior roof and all walls is to be mechanically held in place by 0.032" mill finished perforated aluminum secured to the enclosure interior and provided with tuned engineered hole diameter for optimum sound attenuation. Interior perforated aluminum material shall protect the insulation material as well as allow noise to permeate the absorptive material Provide thickness of sound attenuation material as required to meet the noise level requirements specified for the enclosure.

16. The generator ventilation intake air shall enter the enclosure through enclosure side and / or end mounted intake missile impact rated louvered openings with bird screen coverings. Include sound attenuation baffles as required which shall be securely mountable to the interior of the louvered intake openings on the enclosure. The enclosure air intake system shall be designed and constructed to minimize water penetration into the enclosure during heavy rainfall and be constructed for automatic drainage of falling rain water into the plenum to the outside of the enclosure. Enclosure side mounted intake hoods protruding out from the sides or the end of the enclosure are not acceptable. The cooling air Inlet system shall prevent water intrusion into the enclosure with the generator set operating at full rated load while allowing for a maximum air restriction of less than 0.24" H2O. Maximum design enclosure ventilation air flow velocity through the enclosure shall not exceed 1,200 FPM and shall not exceed the maximum water penetration velocity rating for the intake louvers at any time during generator set operation. The enclosure manufacturer shall submit airflow calculations for confirmation of these requirements.

17. The radiator air shall be vertically discharged through enclosure end wall gravity operated aluminum construction dampers from the enclosure through the top of an enclosure end mounted air discharge plenum which shall be of the same material and construction as the enclosure. The radiator front face shall be sealed to the front wall utilizing and 2" minimum rubber gasket material to minimize recirculation of radiator air discharge and prevent the

transmission of vibration from the packaged generator set to the enclosure. The air discharge plenum shall be furnished with a deflector plate and a bottom drain extension line for prevention of falling water entry into the enclosure and for rainwater drain and removal from the plenum. Air discharge devices shall in no event excessively restrict generator set ventilation airflow during all ranges of generator set operation, from no load to full load. Provide an installed removable plenum access plate. Provide bird screen over the top of the open end of the discharge plenum. The combined air inlet and discharge system shall be designed to maintain a combined total static pressure restriction of no more than 0.48 inches of water gauge (H2O) the enclosure with the generator set operating at full rated load and duty. Both Intake and discharge louvered openings and plenums shall be provided with removable bird/rodent screening to prevent the entrance of debris, birds, rodents and other vermin.

18. The enclosure shall incorporate a minimum of two (2) personnel access door openings that shall be located on <u>each</u> side of the enclosure for a total of a minimum of four (4) enclosure installed doors for enclosure personnel access into the enclosure for generator set operation, service, and maintenance actions. One of the doors on the enclosure shall be located directly in front of the generator side mounted main AC power circuit breaker junction box. Applicable NEC clearances shall be maintained throughout the enclosure. Enclosure doors shall be no less than 36 inches wide. Doors shall be manufactured of the same material as enclosure and installed into aluminum frames. Doors shall be fully gasketed to form a weather tight perimeter seal. Door hinges shall be full length stainless steel piano type and shall be attached with stainless steel hardware. Door handles shall be of a corrosion resistant material and shall include panic hardware and provide for a lockable from the outside, secure entry point into the enclosure. Doors shall be insulated with no less insulation than is provided in the enclosure walls for sound attenuation. Each door shall include “holdback” hardware and restraints to secure the door to the enclosure side wall when the door is opened fully. Include door handle strike plates on the enclosure walls adjacent to the door to provide impact protection from the door handle. Rain gutters that shall channel rainwater away from the top of the enclosure door opening shall be provided for the top of all doors.

19. All exterior components of the enclosure shall be assembled utilizing 0.375 inch minimum stainless steel bolts or screw fasteners, nuts, and lock washers. In addition, watertight neoprene flat washers shall be used on all roof bolts.

20. The enclosure manufacturer shall provide all required hangars, supports, mounting materials and hardware for the generator set exhaust catalyst, silencer, and exhaust piping installed inside of the enclosure. Provide insulation around the exhaust piping sections that are physically located inside of the generator enclosure. The exhaust muffler shall be shipped to the site installed by the enclosure manufacturer inside of the enclosure, located so as to be readily and properly connected to the engine’s stainless steel exhaust flexible connector. The silencer shall be fitted with an NPT threaded drain connection and piped to the outside of the enclosure by the enclosure manufacturer. Silencer drain piping shall be fitted with a stainless steel construction fluid suitable manual isolation valve. Generator set engine oil and coolant rain lines shall be extended to the outside of the enclosure.

21. The generator set high sound attenuation exhaust muffler and associated piping system size and type is to be furnished and installed by the enclosure manufacturer so as not to exceed the engine manufacturer’s published maximum exhaust flow restriction values, and to provide the specified enclosure sound level attenuation. Refer to the exhaust silencer section of these Specifications for additional exhaust silencer system requirements.

22. The enclosure shall be manufactured to be finish coated with a long lasting epoxy coating finish to prevent oxidation and maintain the paint finish.

23. The engine's crankcase fumes disposal hoses shall be extended and routed to the interior of the radiator air discharge plenum by the enclosure manufacturer.

24. Primary AC electrical service power provision and wiring connections to the outdoor enclosure for all accessory AC electrically powered generator set and enclosure equipment items is to be furnished by the Installing Contractor. The enclosure manufacturer shall be responsible to provide and install all required electrical interconnection wiring in EMT or flexible conduit with compression fittings between the AC electrically powered equipment and enclosure interior installed AC junction boxes.

25. Provide two (2) LED lights with covered fixtures installed within the enclosure, and strategically located above the installed generator set control panel. The light fixture shall be ceiling mounted and properly secured against harmful heat and vibrations. Provide and install two (2) light control switches to be located on the inside of the enclosure adjacent to the enclosure door located at the generator end of the enclosure. Provide and install one (1)) GFCI duplex receptacle on the interior of the generator enclosure with weather resistant cover. Receptacle shall be mounted near one of the enclosure interior light switches.

26. Provide one (1) separate cover protected DC powered light bulb installed within vapor proof type protective covered fixture and mounted on the interior roof of the enclosure in locations above the generator's control panel, away from damaging heat, and secured against harmful vibrations. The light is to be connected to a manually operated automatic 0-60minute timer switch, labeled "DC Light", installed inside the enclosure adjacent to one of the generator end enclosure doors. The DC light shall be appropriately fused and wired to the generator set's starting/control battery power in conduit by the enclosure manufacturer. The light shall be large enough to provide adequate illumination for the generator control panel in an emergency situation yet not such that overburdening drain shall be placed on the generator set starting battery system.

27. The installing Contractor shall be responsible to provide the required primary AC electrical services to the enclosure installed AC junction boxes for use with service electrical power to all required generator and enclosure AC electrical equipment. The enclosure manufacturer shall wire all enclosure interior AC electrical items in EMT / or flexible conduit to the AC load center. Any junction boxes used shall be NEMA 3R rated construction.

28. Generator AC power cables and conduits shall enter the enclosure from the bottom of the enclosure mounting frame base through a cable stub up opening which shall be located under the installed generator mounted circuit breaker junction boxes. All of the generator system control and signal wiring for interface with the remote electrical transfer equipment, AC electrical services, remote controls and annunciation requirements shall be furnished, installed, and terminated by the Installing Contractor.

29. The Installing Contractor shall be responsible to furnish suitably sized and constructed concrete foundation for the furnished complete assembled generator set enclosure package.

30. The generator set equipment outdoor enclosure shall be furnished by the generator supplier as designed and manufactured by Coastline Power Solutions located in Deland, Florida, Fidelity Manufacturing located in Ocala, Florida, or approved equal. Any proposed provision

of an alternate enclosure manufacturer shall require detailed documentation and certifications indicating complete compliance with these Specifications and the Drawings including the overall dimensions of the enclosure and mounting frame base package and the enclosure and door sizes to be included in the Shop Drawing submittals for Engineer review and approval.

2.06 EXHAUST SYSTEM

A. The engine exhaust system shall be installed to discharge combustion gases quickly and silently. The exhaust system including the generator set engine exhaust silencer and all exhaust treatment equipment and piping shall be designed for minimum restriction, and in no case shall the total exhaust system backpressure restriction imposed on the engine at full operating load exceed the engine manufacturer's maximum allowable exhaust backpressure.

B. The exhaust silencer and all exhaust catalyst aftertreatment system equipment shall be installed inside of the generator set outdoor weather protective enclosure above the installed generator set. Exhaust equipment located or installed outside of the generator enclosure shall not be acceptable. Installation shall account for thermal growth of the exhaust system during generator set operation. All piping, flanges, gaskets, fittings, hardware and insulation required for the generator set exhaust system installed inside of the generator enclosure shall be furnished and installed by the enclosure manufacturer. All exhaust piping shall be Schedule 40 steel piping.

C. All portions of the exhaust system installed inside of the generator set enclosure area shall be covered with appropriate high temperature resistant insulation and shielding inside of the enclosure, suitable for use with the maximum temperature possible from the generator set exhaust system. Exhaust components installed inside of the enclosure discharge plenum need not be insulated. The exhaust muffler and all enclosure interior installed piping shall be insulated / lagged so that the surface temperature does not exceed 175 degrees F. Any enclosure interior installed exhaust piping insulation used shall not contain any asbestos or asbestos bearing products Insulation shall not interfere with the functioning of the engine flexible exhaust connector and allow for compensation for exhaust system thermal and vibrational movements. All exhaust piping and exhaust system insulation shall be furnished and installed by the muffler and enclosure manufacturer

D. The spark ignited engine shall be furnished with an emissions treatment means including use of any catalytic exhaust aftertreatment / converter system designed to for exhaust oxidation and emissions reduction through simultaneous conversion to reduce nitrogen oxides (NOx), carbon monoxide (CO), hydrocarbons (HC), and Volatile Organic Compounds (VOC) in the engine exhaust emissions levels for the engine complying with the applicable US EPA emission regulations and standards for spark ignited engines. The exhaust treatment system and exhaust silencer equipment utilized with the furnished engine generator set shall be sized to maintain exhaust backpressure below the engine manufacturer's listed maximum allowable restriction for the furnished natural gas fueled engine when used in conjunction with the exhaust silencer and connected exhaust piping system throughout all ranges of generator set loading operation, from no load to full load.

E. The generator exhaust silencer exhaust piping outlet shall be terminated vertically outside of the enclosure and furnished with a stainless steel or aluminum construction counterweighted exhaust piping rain cap. The exhaust silencer and associated piping shall be installation supported and braced to prevent weight or thermal growth from being transferred to the engine. Flexible expansion fittings shall be provided to accommodate thermal growth.

Support dampers and springs shall be included where necessary to isolate harmful vibrations. All exhaust system piping, insulation materials, and installation of the entire exhaust system shall be provided by the generator enclosure Manufacturer.

F. The exhaust silencer (muffler) shall be minimum of "hospital" grade to provide extreme noise attenuation for environments with low background noise where slight noise emissions would be objectionable. The exhaust silencer can be combined with use of a generator set manufacturer furnished catalytic converter system. The silencer shall be prime painted with high temperature finish coating and capable of up to a 35-42 d(B)A attenuation at between 125 and 2000 Hz octave band center frequencies. The exhaust silencer shall be selected so that the generator set engine full load operation exhaust sound levels around the enclosure shall not exceed the maximum sound level specified for the generator outdoor enclosure if specified. Furnish an appropriately sized stainless steel bellows type engine expansion flex connector for connection to the engine exhaust outlet.

G. The exhaust silencer body shall be furnished with a N.P.T. drain fitting. The exhaust muffler and exhaust piping from the muffler shall be extended with a slight pitch downward to facilitate exhaust silencer and piping drainage. The muffler drain shall be piped by the enclosure manufacturer to the outside of the enclosure and provided with a stainless steel construction manual shutoff isolation valve installed inside of the enclosure. The muffler water drain line shall be flexibly terminated on the outside of the enclosure with a stainless steel N.P.T fitting and stainless steel threaded cap.

2.07 STARTING CONTROL SYSTEM

A. Automatic Control - Fully automatic and manual engine start-stop controls in the generator control panel shall be provided. Controls shall provide automatic shutdown of the engine/generator set for low oil pressure, high water temperature, over speed, overcrank, and loss of low engine coolant conditions. Alarms for approaching high water temperature, impending low oil pressure, low supply gas pressure, and all other alarms as specified herein shall also be included. Controls shall include a 90 -second single cranking cycle limit with lockout and be adjustable for a multiple cyclic crank system with lockout and overcrank protection. The system shall be capable of crank starting a properly equipped engine so as to allow engine cranking termination to occur as necessary for the generator set to consistently achieve satisfactory operating speed within 10 seconds anywhere between the specified minimum and maximum site ambient temperature range. Automatic adjustable crank cycle and termination control logic and circuitry shall be furnished on the engine.

B. The generator controls shall allow manual operation of start and stop operation of the generator set as specified herein.

C. The generator set engine shall be equipped with a 24 VDC electric starting motor system which shall include a solenoid shift positive engagement starting motor and starter relay, an engine driven battery charging alternator, a generator set starting / control battery bank, an automatic battery charger and automatic reset circuit breaker to protect against excessive pinion gear butt engagement. The starting motor shall be capable of providing sufficient engine generator set cranking for a minimum of 90 consecutive seconds without damage to the starting motor, engine starting system, or engine. The system shall be capable of crank starting the furnished engine generator set so as to allow crank termination to occur as necessary for the generator set to consistently achieve proper rated operating speed within 10 seconds anywhere between the specified minimum and maximum site ambient temperatures.

Automatic adjustable crank cycle and termination control logic and circuitry shall be furnished on the engine.

D. Furnish an engine manufacturer installed DC, minimum of 45 ampere rated battery charging alternator with a transistorized voltage regulator. The engine mounted battery charging alternator and belt assembly is to be furnished with an OSHA approved guards.

E. Batteries for starting and control shall be a heavy duty, low-maintenance, electrolyte accessible, housed in a hard rubber or polypropylene case with provision for venting. Provide two (2) 12 VDC batteries utilizing parallel electrical interconnections. Generator set starting and control power batteries shall be 24 Volt DC and sized / rated based on specific application requirements of engine oil viscosity, ambient starting temperature, control voltage, overcharging and vibration., but in no case shall each battery be manufacturer rated at less than 1,000 cold cranking amperes for 30 seconds at 0 Deg. F and with a 90 AH capacity at the 20 hour rate. The battery shall be sufficient for cranking the engine for a minimum of 15 seconds per each of up to six (6) cranking cycles at firing speed with ambient temperature of 32 degrees F. Batteries shall have engine starting cranking amperage capacity adequate to provide a minimum of 90 seconds of continuous generator set cranking without overheating, distorting, or damaging any equipment.

F. The generator set batteries shall be located as close to the starting motor as practical, away from spark sources, in a relatively cool and ambient, and permit easy inspection and maintenance. The batteries shall be housed on an acid resistant frame, or box, which shall allow full flow air ventilation and provide for electrolyte containment. Required insulated battery cables and clamps shall be provided and sized to satisfy engine generator set starting and control circuit requirements.

G. A solid state, constant voltage automatic battery charger, UL Listed, designed for use with lead acid batteries shall be provided of the current limiting type, designed for float charging, with an automatic and manual adjustable equalize charge timer. It shall accept 120 Volt AC, single-phase input. The charger shall be sized so as to provide 24 Volt DC, minimum of ten (10) Ampere output. It shall be fused on the AC input and DC output and incorporate current limiting circuitry. The charger shall include an AC power monitor with light, a 1% accuracy DC ammeter and DC voltmeter. The charger shall be furnished with alarms for charger failure/malfunction, low battery voltage, and high battery voltage, with individual local alarm light indications and dry alarm contacts for each alarm wired to the generator DC control interconnection junction box for remote annunciation use. The charger shall be housed in a NEMA 1 enclosure suitable for wall mounting and installed inside of the generator weather protective enclosure by the generator supplier. AC electrical power for the battery charger shall be wired to the generator outdoor enclosure AC load center panel by the enclosure manufacturer. Charger low battery voltage, high battery voltage, and charger failure alarms shall be wired to the generator set control and alarms by the enclosure manufacturer.

2.08 GENERATOR CONTROL PANEL

A. Generator Set Control: The generator set shall be provided with a microprocessor-based control system that is UL508 Listed and designed to provide automatic starting, monitoring, and control functions for the generator set. The control system shall also be designed to allow local monitoring and control of the generator set, and remote monitoring and control as described in this specification. The control shall be mounted on the generator set. The control

shall be vibration isolated and prototype tested to verify the durability of all components in the system under the vibration conditions encountered. Generator control panel shall be Caterpillar model EMCP 4.2B, with all standard features, or approved equal. The generator set mounted control shall include, but not necessarily be limited to, the all features and functions as indicated herein.

B. Control Switches / Keys

1. Mode Selection Switch or Keys: The four position mode select switch or Mode keys shall initiate the following control modes. When in the RUN or Manual Start position, the generator set shall start, and accelerate to rated speed and voltage as directed by the operator and be ready for manual transfer. In the STOP position, the generator set shall stop after a programmable cool down period has elapsed. In the OFF-RESET position, the generator set shall immediately stop, bypassing all time delays and the generator control panel fault lights are reset if the fault condition no longer exists. In the AUTO position the generator set shall be ready to accept a signal from the manual transfer switch or a remote device to start and accelerate to rated speed and voltage when the signal is issued, and shutdown when the signal is removed.

2. EMERGENCY STOP switch: Switch shall be a red maintained push-button with glass cover and small hammer. Depressing the emergency stop switch shall cause the generator set to immediately shutdown while simultaneously activating the generator circuit breaker shunt trip and a generator control panel fault alarm light, and be locked out from automatic restarting.

3. PANEL LAMP Switch: Depressing the panel lamp switch shall cause the entire panel to be lighted with DC control power. The panel lamps shall automatically be switched off 10 minutes after the switch is depressed, or after the switch is depressed a second time.

C. Generator Set AC Output Metering. The generator set shall be provided with a metering set including the following features and functions:

1. Digital (LCD) metering set, 1.0 % accuracy, to indicate generator true output RMS voltage, current, and frequency. Generator output voltage shall be available in line-to-line and line-to-neutral voltages. The digital metering equipment shall be controlled by a single microprocessor to provide consistent readings and performance.

D. Generator Set Alarm and Status Display

1. The generator set shall be provided with alarm and status indicating lamps to indicate non-automatic generator status, and existing warning and shutdown conditions. The lamps shall be high-intensity LED type. The lamp condition shall be clearly apparent under bright room lighting conditions.

2. The generator set control shall separately, via LED lamps, indicate the existence of the following alarm and shutdown conditions:

- Low oil pressure (alarm)

- Low oil pressure (shutdown)
- Low coolant temperature (alarm)
- High coolant temperature (alarm)
- High coolant temperature (shutdown)
- Low coolant level (alarm or shutdown--selectable)
- Fail to start/overcrank (shutdown)
- Overspeed (shutdown)
- Low DC voltage (alarm)
- Low natural gas supply pressure (alarm)
- Emergency stop (shutdown)
- Gas leakage (alarm) - (from Contractor furnished equipment)
- High engine exhaust temperature (alarm)
- High engine exhaust temperature (shutdown)

E. Engine Status Monitoring

1. The following information shall be available from a digital status panel on the generator set control:

   - engine oil pressure (psi or kPA)
   - engine coolant temperature (degrees F or C)
   - engine oil temperature (degrees F or C)
   - engine speed (rpm)
   - number of hours of operation (hours)
   - battery voltage (DC volts)

F. Engine Control Functions

1. The control system provided shall include a programmable cycle cranking system, which allows for user selected crank time, rest time, and number of cycles. Initial settings shall be for 3 cranking periods of adjustable 10-15 seconds each, with 10-15-second rest period between cranking periods. If the engine has not started by the end of the cranking period, the generator set shall automatically shut down and activate the Fail to Crank light.

2. The generator control panel shall have capability of providing communication via Modbus RTU (RS-485 Half duplex). The generator control panel shall be communication interfaced with the remote generator set annunciator panel.

3. Generator control system shall incorporate adjustable cool down generator stop controls that will allow the generator to continue to run when the remote start / run signal is removed for an adjustable 5 – 60 minutes. At the end of the selected time period, the generator set shall automatically shut down and be automatically ready to restart upon return of the remote generator set start / run signal.

4. Generator protection shall be provided for the following:
   a. Over/Under voltage
   b. Over/Under frequency
   c. Over current
   d. Current balance

e. Over/Loss of excitation
f. Generator phase sequence

5. The generator set manufacturer furnished generator set control panel shall be provided with NEC / NFPA 70 compliant adjustable Arc Flash energy reducing maintenance mode functionality. Details of this provision shall be included in the generator set equipment shop drawing submittals.

G. Remote Annunciator Panel

1. The generator Supplier shall furnish one (1) generator battery DC voltage powered multiple LED light remote generator alarm annunciation panel for remote generator system status monitoring. Remote annunicator panel communications shall be via RS485 communications serial data link, fully isolated twisted pair with shield cabling to be furnished and installed by the Installing Contractor. The installing Contractor shall install the remote annunciator and coordinate the electrical wiring and communications interface requirements with the generator supplier.

2. The remote annunciation panel shall be provided with alarm horn and silence switch, located as indicated on the Drawings, and in compliance with NFPA 110, Level 1 requirements. The remote annunciation shall provide the following audible and visual alarms or status indications:

Lamp Legend	Generator Set Condition Indicated	Light	Alarm Audible
High / Low Battery Voltage	- Battery voltage too high or too low	Red	No
Generator On Line	-Generator set supplying the load (from ATS)	Green	Yes
Pre-Low Oil Pressure-	Oil pressure approaching low limit	Yellow	Yes
Low Oil Pressure-	Generator shut down due to low oil pressure	Red	Yes
Pre-High Coolant Temp-	Coolant temp. approaching high limit	Yellow	Yes
High Coolant Temp-	Generator has shut down due to high engine coolant temperature	Red	Yes
Low coolant Temp-	Engine heater has malfunctioned	Yellow	Yes
Low coolant level	- Excessive loss of engine coolant	Red	Yes
Overspeed -	Engine has shut down due to overspeed	Red	Yes
Overcrank -	Engine failed to start	Red	Yes
Not in Auto-	Engine control switch not in AUTO position	Flashing	Yes
Low natural gas pressure –	(from Contractor)	Red	Yes
Battery Charger Fail-	Battery charger is signaling a failure	Red	Yes
Generator Circuit Breaker Open –	Circuit breaker status	Yellow	Yes
Emergency Stop -	Generator has been emergency stopped	Red	Yes
Engine RPM Loss –	Improper engine RPM	Red	Yes
Generator running –	Generator set is running	Yellow	No
Generator Power (from ATS) –	Generator on line	Yellow	No
Natural Gas Fuel Leak (from Contractor)		Red	Yes

3. Provisions for labeling of the annunciation in a fashion consistent with the specified functions shall be provided. Alarm silence and lamp test switch shall be provided on the panel. Alarm horn (when switched on) shall sound for first fault, and all subsequent faults, regardless of whether first fault has been cleared.

4. The remote annunciator shall be powered from the generator set's starting / control battery. Installation of the annunciator panel and all electrical power and signal interconnections requirements between the generator system equipment, the transfer switch equipment, the generator remote annunciation panel, and other required remote annunciation signals shall be furnished by the Installing Electrical Contractor. The Generator Supplier shall provide project specific electrical point to point wiring schematics for electrical interface connection for all of the remote annunciation signals.

PART 3 – EXECUTION

3.01 FACTORY TESTING

A. The engine-generator set manufacturer shall perform factory testing and quality control inspections on the engine-generator set provided prior to factory shipment. A certified report of these tests and inspections shall be submitted to the Engineer prior to delivery of the generator set to the site.

B. The engine, generator, and engine-generator set shall be subjected to standard factory testing and quality control inspections to insure reliable operation. These tests and inspections shall include, but not necessarily be limited to, the following

a. Factory testing at the generator set's nameplate power rating and power factor utilizing natural gas fuel to confirm baseline data with recording of each of the following:

1) Voltage (each of three phases and average)
2) Amperage (each of three phases and average)
3) KW output
4) Power Factor
5) Frequency
6) Engine Speed

b. The load bank used for testing shall be reactive, allowing generator set testing to be performed at generator set nameplate 0.8 power factor. Testing of the generator set at the factory shall not be dependent on the generator control instruments to read amperage and voltage on each phase. Rather, the test instrumentation shall serve as a check of the generator set meters. Confirmation of comparable readings of the generator control panel display parameters with the load bank testing instrumentation shall be indicated on the furnished factory test reports Rated engine speed.

c. The generator manufacturers certified Factory test report of the factory testing and inspection shall be submitted to the Engineer for approval prior to delivery of the unit to the project site. Copies of the factory test report for the furnished generator set shall also be included in the generator supplier furnished generator set equipment Parts, Operation and Maintenance manuals.

C. Generator set manufacturer certified test report of the factory testing and inspection shall be submitted prior to delivery of the generator set to the project site. A minimum six (6) copies shall be provided.

D. Natural gas and all consumables and equipment necessary for Factory testing shall be furnished by the generator set manufacturer. Any generator set equipment defects or operational deficiencies which become evident during the Factory testing shall be corrected by the manufacturer at their own expense prior to shipment of the equipment

3.02 SERVICES

A. Furnish the site services of a competent and experienced generator set Manufacturer's field service technician who has complete knowledge of proper installation, startup, testing, and operation and maintenance of the equipment for a period of not less than four (4) days in separate visits to inspect the installed equipment, supervise the initial generator equipment startup and test run and load bank test the generator set, commission, demonstrate proper operation of the entire generator system, and to provide instructions to the Owner's personnel.

B. Three (3) Engineer final approved copies of the generator system parts, operation and maintenance manuals specified must be delivered to the Engineer prior to scheduling the instruction period with the Owner.

3.03 FIELD QUALITY CONTROL

A. The Installing Contractor shall confirm that the generator set, enclosure, and transfer switch equipment concrete foundation installation pads are, suitably sized, level, and free of irregularities.

B. The complete installation shall be checked for procedural and operational compliance by technical representatives of the engine-generator set supplier. Any observed or determined deficiencies shall be corrected by the Installing Contractor.

C. The Generator Supplier shall perform start-up procedures, system checks, adjusting, and site testing required after the installation is complete. The Installing Contractor shall be responsible to ensure adequate natural gas supply, volume and pressure is available at the generator set gas supply at all times, though all generator set loading ranges of operation.

D. The engine lubricating oil and coolant conditioner, as recommended by the engine manufacturer, shall be provided by the generator supplier and installed in the furnished generator sets.

3.04 DELIVERY INSPECTIONS

A. The Installing Contractor shall examine and confirm that the site delivery areas to receive the generator system equipment is free of obstructions, debris, and moisture, and that adequate delivery and storage space, clearances for delivery, offloading, and installation of the generator system equipment is available at the time of generator system equipment delivery.

B. The Installing Contractor shall be responsible to coordinate the site delivery and installation of all generator system equipment to allow timely and proper and safe movement into the

site's designated storage and installation spaces. The generator set equipment shall not be delivered to the project site by the generator equipment manufacturer or generator supplier until requested to be by the Installing Contractor. The generator supplier shall be responsible for proper storage and delivery of all of the generator system equipment pending the Contractor's request and instructions for site delivery. If the Installing Contractor is not ready to accept site delivery of the generator system equipment after it is manufactured and ready to be shipped from the manufacturer, the generator supplier shall be responsible for any associated storage requirements and any delayed site transportation and site delivery costs of the generator system equipment including the generator sets, normal and distribution switchgear, generator paralleling and control switchgear. The Installing Contractor shall be responsible for all required equipment offloading, rigging, and installation actions for all site delivered generator system equipment.

C. All generator system accessory equipment shall be site delivered by the generator supplier vendor. The Installing Contractor shall remove and replace any access fencing, doors, lift-out panels, and structures to provide pathway for moving the generator system equipment into place and ensure that the delivered generator equipment can be moved on the project site past any obstructions in the needed delivery path

D. The Installing Contractor shall be responsible to protect all site delivered equipment from exposure to dirt, dust, fumes, water, falling or wind driven rain or debris, moisture, corrosive substances, and physical damage.

E. The Installing Contractor shall be responsible to ensure that the generator equipment and generator system components and accessory equipment, including all generator transfer switch equipment shall be handled, protected, stored, and installed according to manufacturer's written instructions. Use factory-installed lifting provisions where provided.

F. Besides normal care considerations, the Installing Contractor shall be responsible to coordinate with the generator equipment supplier for the proper handling and safety of the generator system equipment. The Contractor shall obtain from the Generator Supplier prior to generator system equipment site delivery, adequate information and instructions for the Installing Contractor's use in ensuring that all of the delivered generator system equipment, including the generator enclosure and transfer switch equipment, will be correctly and properly offloaded, rigged, cared for, protected, stored, and installed by the Installing Contractor.

G. The Installing Contractor shall be responsible to confirm that all unsatisfactory site conditions are corrected prior to scheduling all generator system equipment deliveries and installations at the Project site.

3.05 SYSTEM START-UP AND TESTING

A. The Generator Supplier's manufacturer shall provide a trained field service technician who shall be responsible for performance of the field start-up and testing of the generator equipment. The Generator Supplier shall furnish the Engineer with written certification assuring that each item of equipment is complete, in good condition, free from damage and properly installed, connected, adjusted and operating properly.

B. The Installing Contractor shall provide the required assistance to the generator set manufacturer's field service technician during start-up and testing. This assistance shall be

generally limited to tasks directly associated with the installation of the generator system equipment, not with the internal components or inherent function of the generator set equipment.

C. The Installing Contractor shall be responsible to confirm the site provision of the necessary natural gas supply to the site installed natural gas fueled generator set engine as required for all onsite startup, testing and operational demonstrations of the generator set equipment. Installing Contractor shall confirm that adequate quantity, flow, pressure, and stability of industry pipeline dry natural gas is available at the site for continuous connected supply to the generator set natural gas supply system for operation of the generator set prior to Generator Supplier initiation of generator equipment startup and testing procedures.

D. The generator vendor shall provide and deliver to the site, temporary, dry type resistive load bank equipment and temporary power conductors as necessary for load bank testing of the generator set. The load bank capacity shall be sized and furnished so as to have a minimum usable load testing capability of 100% of the generator set's nameplated standby KW rating. Site building load shall not be used in conjunction with the generator system load bank testing. The Installing Contractor shall be responsible for the electrical connections and disconnections of the Generator Supplier furnished temporary use load bank equipment and power conductors / cables to all of the generator system equipment and the temporary load bank equipment as necessary to satisfactorily perform the required generator system load bank testing.

E. Generator set load test: Operating on natural gas supply, provide load testing for the site generator set as specified herein. For each addition and removal of test load on the generator set during the load bank testing, record the generator block loading and unloading transient high and low voltage and high and low frequency levels and actual recovery time for each transient load change in order to achieve generator set steady state operation with stabilized voltage and frequency levels.

F. Should the generator testing fail or indicate that any of the EG system equipment or it's operation and performance is not in compliance with the Specifications, the costs of all corrective measures shall be borne by the Installing Contractor. Once corrective measures are implemented, the operational testing requirements shall be repeated at the cost of the Installing Contractor. The Installing Contractor shall be additionally responsible for all fuel, material, labor, and delay costs associated with retesting procedures.

G. Generator supplier shall provide the necessary information to the Contractor for their use in furnishing AC power cable and wiring interface of the new generator equipment with the generator automatic transfer switch and for required Station annunciation / monitoring equipment so that automatic operation and annunciation of the complete emergency power system functions as described and as required by these Specifications.

H. System start-up and operational testing procedures shall not be limited to those specified herein. Others shall be performed as required to confirm and demonstrate that the furnished generator system functions as described and required by these Specifications.

I. Site testing of the generator set shall be in accordance with the testing guidelines of the Manufacturer and these Specifications. All testing shall be provided in accordance with the approval requirements of the Engineer.

J. The generator supplier shall provide and deliver to the site, temporary, dry type resistive load banks for load bank testing of the generator set. The load bank capacity shall be sized and furnished so as to have a minimum usable load testing capability of 100% of the generator set's nameplated standby rating. Station / building electrical load shall not be used in conjunction with the generator system load bank testing. The Installing Contractor shall be responsible for connection and disconnection of the generator supplier furnished temporary use load bank equipment cables to all of the generator set and the temporary load bank equipment as necessary to perform the generator equipment load bank testing.

K. Generator system operational and demonstration testing shall be performed by the Generator Supplier and the Installing Contractor as coordinated with, and in the presence of the Engineer and any required approval Authorities Having Jurisdiction.

3.06 PAINTING

A. The engine generator set and associated enclosure equipment shall be shop primed and finish coated in accordance with the Manufacturer's standard practice with heat resistant paint prior to shipment. The generator outdoor enclosure shall be white in color and the enclosure mounting frame base shall be black in color. All areas damaged during shipment or installation shall be touched up after installation. The generator system equipment shall be touched up painted as required prior to Owner acceptance. An adequate supply of Manufacturer's touch-up paint for the generator set, the generator enclosure, and the enclosure mounting base floor shall be supplied by the Generator Supplier to the Owner.

3.07 SYSTEM SERVICE CONTRACT

A. The Generator Supplier shall provide to the Owner a one (1) year service maintenance contract for the furnished generator set equipment, including annual standard engine oil change and disposal of removed oil for the new generator set in accordance with all Federal, State, and local codes and requirements. The generator supplier's service maintenance contract shall include four (4) routine scheduled maintenance service visits with a complete engine oil change on the fourth visit. The service maintenance contract shall commence on the date of substantial completion as approved by the Engineer. The Generator Supplier shall maintain 24 hour / 365 day emergency contact access to personnel of the Generator Supplier to expedite emergency repairs including parts replacements. The Generator Supplier must furnish this service maintenance contract and associated services directly, not through an alternate or sub contracted company or supplier, no exceptions. Complete details of the service contract shall be included in the Generator Supplier's furnished Shop Drawing Submittals and in the Generator Supplier's final parts, operation and maintenance manuals furnished to the Owner.

B The Generator Supplier's service maintenance agreement contract shall be optionally available for purchase extension by the Owner at the end of the specified one (1) year service maintenance agreement. The Generator Supplier shall maintain the following:

1. Local generator supplier employed trained and qualified mechanics, technicians, work vehicles, and service / repair equipment.
2. Factory trained service representatives and all tooling necessary to install, test, maintain, and repair or replace all provided equipment.
3. Specified Parts Availability must be maintained by the generator supplier for a minimum of ten (10) years from date of generator equipment startup.

4. Locally available at all times parts inventory stock of not less than 80% of all engine replacement parts and must maintain generator equipment service and parts availability on a 365 day / 24 hour basis. Proof and written certification of Generator Supplier compliance with these requirements shall be provided by the generator supplier and included in the furnished generator system Submittals and parts, operation and maintenance manuals. An inspection of the generator supplier's Station may be made by the Engineer of Record in order to substantiate this requirement. The Generator Supplier shall guarantee 100% parts availability within 72 hours from the time of any service repair request or when an order is entered with the generator supplier.

3.08 WARRANTY

A. The Generator Supplier shall be capable of, and solely responsible to maintain and provide factory trained and qualified service personnel and, the specified stock and availability of replacement or repair parts, technical assistance and support, and complete warranty service administration on direct behalf of the furnished generator equipment Manufacturer. Subcontracting or rerouting of these services by the generator system supplier is not acceptable. Generator Supplier written certification of compliance to these requirements must be included in the furnished generator system Submittals and in the generator equipment parts and operation manuals furnished to Engineer and the Owner.

B. All of the Generator Supplier furnished generator system equipment furnished under this Section shall be guaranteed against defects in material, parts, and workmanship by both the generator set Manufacturer and the generator Supplier. The generator system equipment warranty and associated coverage shall be for a period of five (5) years, (60 months). The warranty shall be comprehensive covering all Generator Supplier furnished generator system equipment, including the generator set and the, outdoor weather protective enclosure, and all accessory equipment for each. All generator system equipment, including, but not limited to, the furnished generator set, the generator set outdoor weather protective sound attenuated enclosure, automatic transfer switch equipment, remote annunicator panel, and all generator system accessory items furnished by the generator Supplier shall be covered by this comprehensive five (5) year warranty, no exceptions. There shall be no warranty related charge deductibles or associated service fees applicable to the Owner for justifiable Generator Supplier furnished warranty services for the entire duration of the specified warranty period. The generator equipment warranty coverage shall commence on the date of initial satisfactory start-up and load bank testing of the generator set, and shall include all Generator Supplier furnished labor, parts, travel time, expenses, and generator equipment expendable items (lubricating oil, coolant, filters, gaskets, and other serviceable items made unusable or required to be replaced by the warrantable defect) necessary for implementation and completion of all warrantable equipment repairs or corrective actions furnished by the Generator Supplier at the job site or elsewhere. Provided the generator system is operated properly within the application as specified herein, generator set running hours shall not be a limiting factor for the generator system equipment warranty provision, either by the Manufacturer or by the Generator Supplier.

C. The furnished generator set batteries are considered a consumable item and shall be warranted against defects in material and workmanship for a period of two (2) years from generator set startup, with no cost prorating. The Owner shall be responsible to maintain the generator equipment at all times in accordance with the generator equipment manufacturer's maintenance guidelines.

D. Manufacturer or Generator Supplier exceptions to these warranty requirements shall not be acceptable. Provision of the generator equipment for this project constitutes Generator Supplier acceptance pf these specified warranty requirements, regardless of any Manufacturer or Generator Supplier warranty coverage exceptions.

E. The generator system Shop Drawing Submittals and furnished generator system parts, operation and maintenance manuals must include written warranty provision information and supporting documentation clearly indicating and certifying complete compliance to the specified warranty requirements for all of the generator system equipment furnished by the generator Supplier, including the generator outdoor enclosure, no exceptions. Failure of the Generator Supplier to provide the Owner with the specified warranty provisions and associated warranty services shall be sufficient cause for rejection of the generator equipment.

F. The Generator Supplier must maintain and be able to provide locally available (within 100 miles of the project installation) Factory trained and qualified service personnel employed by the Generator Supplier, the specified local stock and availability of replacement or repair parts, technical support assistance, and complete warranty and service administration on direct authorized behalf of the furnished generator equipment Manufacturers. These warranty services shall be available to the Owner from the generator Supplier on a 365 day/ 24 hour basis. Generator Supplier warranty services are to be provided during generator Supplier normal business service work week hours, however, overtime or premium time warranty services shall be available and furnished at all times by the generator Supplier if requested by the Owner, for which the Owner shall be responsible and obligated to compensate the Generator Supplier only for the after hours overtime or premium time labor and services differential charges. Subcontracting or rerouting of any of the warranty or repair related services by the Generator Supplier to other generator Dealers or distributors, repair, or service providers is not acceptable.

3.09 PARTS, OPERATION AND MAINTENANCE MANUALS

A. After completion of work, and satisfactory start-up and testing of the equipment at the project site, deliver to the Engineer, Three (3) copies of the generator equipment Parts, operation instructions, maintenance manuals and drawings presenting full details for care and maintenance of each item of equipment provided under this Contract. The manuals shall be furnished as detailed herein.

B. Each manual shall contain the operating and maintenance information and parts lists for all equipment provided under this Contract. When necessary, provide supplemental drawings to show system operation and servicing and maintenance points. For all electrical components, provide complete, as field installed and wired electrical wiring and interface diagrams. Manuals shall include instructions required to accomplish specified operation and functions. Data shall be neat, clean, legible copies.

1. In general the manual shall include, but not necessarily be limited to, the following:
   a. Operating Instructions - with description and illustration of the engine-generator set, engine and generator controls and any other controls and indicators.

b. Parts Books / information- that illustrate and list all equipment and assemblies, subassemblies and components, including gaskets, hoses and fastening hardware (nuts, bolts, washers, etc.).

c. Preventative Maintenance Instructions - on the complete system that cover daily, weekly, monthly, and annual maintenance requirements and schedules including a complete lubrication chart and information.

d. Troubleshooting Chart - covering the complete engine-generator set showing description of trouble, probable cause, and suggested remedy.

e. Recommended Spare Parts List - showing all consumables anticipated to be required during normal operation, routine maintenance and testing, including current pricing and quantities recommended to be maintained on hand at the Owner's Station.

f. Project specific as field installed and generator system as-built and field tested electrical schematics including Wiring Diagrams with point to point interconnection diagrams for all wiring interfaces - showing function and operational sequences of all electrical components and electrical systems.

C. Manuals shall be in the form of three-ring binders adequately labeled with the project name, location, shall include Generator Supplier normal and emergency contact information, and the contents clearly indexed.

3.10 ORIENTATION / TRAINING

A. The Generator Supplier shall provide a complete and detailed orientation for the Owner's operation and maintenance personnel as coordinated with the Engineer and the Owner through the Installing Contractor. The generator system parts, operation and maintenance manuals are to be furnished and approved by the Engineer prior to Owner training. The orientation shall include hands-on instructions and demonstrations. Topics covered during the training shall include complete generator system operation, control and transfer operations, schematics, wiring diagrams, metering operations, indicators, warning lights, shutdown system, routine maintenance, remedial trouble shooting procedures, service maintenance contract, and warranty provisions. Allow one (1) separate day for scheduled provision of Owner training.

END OF SECTION

DRAWING INDEX

--	COVER SHEET
C-01	SITE PLAN

CITY OF FORT LAUDERDALE

PROJECT # P12478
STORMSTATION 1
FIXED EMERGENCY GENERATORS

300 S.W. 1ST AVENUE

FORT LAUDERDALE, FLORIDA

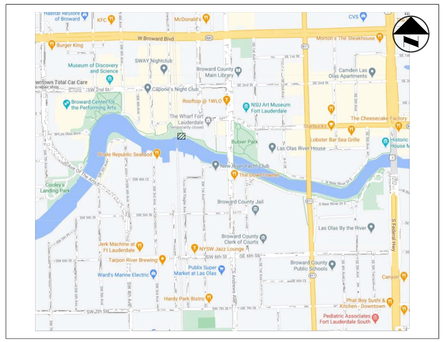

NORTH

LOCATION SKETCH

PROJECT # P12478
STORMSTATION 1
FIXED EMERGENCY GENERATORS
300 S.W. 1ST AVENUE, FORT LAUDERDALE, FLORIDA 33301

CITY OF FORT LAUDERDALE
PUBLIC WORKS DEPARTMENT
ENGINEERING & ARCHITECTURE
100 North Andrews Avenue, Fort Lauderdale, Florida 33301

FORT LAUDERDALE CITY COMMISSION

DEAN J. TRANTALIS	MAYOR
JOHN C. HERBST	COMMISSIONER - DISTRICT I
STEVEN GLASSMAN	COMMISSIONER - DISTRICT II
PAMELA BEASLEY-PITTMAN	COMMISSIONER - DISTRICT III
WARREN STURMAN	COMMISSIONER - DISTRICT IV

PROJECT MANAGER	JOB TITLE	PHONE NO.
GARY TENN	SENIOR SUPERVISING ENGINEER	(954) 739-6400

DATE: 02/02/24

CAD FILE: 20-0072-001-01-COV FTL

DRAWING FILE No.: 4-144-22

PERMIT

PROPOSED LEGEND:

- 0.00 — PROPOSED PAVEMENT ELEVATION
- 0.00 — PROPOSED CONCRETE ELEVATION
- 0.0 — PROPOSED SOD ELEVATION
- GRAVEL (EXISTING SHRUBBERY TO BE REMOVED)
- CONCRETE GENERATOR PAD
- DRAINAGE FLOW DIRECTION

EXISTING LEGEND:

- ANCHOR
- BLOW-OFF VALVE
- CATCH BASIN
- CONCRETE LIGHT POLE
- CONCRETE POST
- CONCRETE POWER POLE
- CURB INLET
- ELECTRICAL OUTLET
- ELECTRICAL PANEL
- ELECTRICAL PULL BOX
- ELECTRICAL MANHOLE
- GAS MARKER
- HEADWALL
- METAL LIGHT POLE
- MONITORING WELL
- PIPE
- PARKING LIGHT 2 SQUARE
- SANITARY MANHOLE
- SIGN
- SPOT-FLOOD LIGHT
- SANITARY SEWER CLEAN OUT
- STORM MANHOLE
- TELEPHONE MANHOLE
- TELEPHONE PEDESTAL
- TELEPHONE PULL BOX
- TRAFFIC POLE
- TRAFFIC PULL BOX
- TRANSFORMER PAD
- TRANS — WATER BLOW-OFF
- WATER VALVE
- WOOD POWER POLE
- OHW — OVER HEAD WIRES
- TOB — TOP OF BANK
- TOE — TOE OF SLOPE
- WM — WATER MAIN
- GUARDRAIL
- NON-VEHICULAR ACCESS LINE

VINYL FENCE

SCALE: N.T.S.

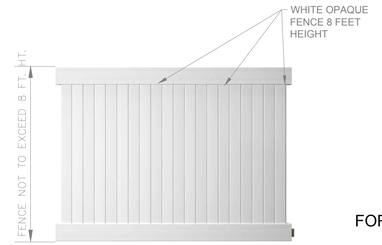

OPAQUE 8-FT FENCE AND GATE DETAIL

PROJECT SITE

SITE ADDRESS:
300 S.W. 1ST AVENUE
FORT LAUDERDALE, FLORIDA 33301

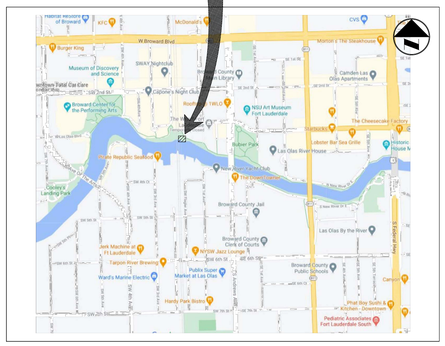

LOCATION MAP

N.T.S.
SECTION 10, TOWNSHIP 50 SOUTH, RANGE 42 EAST

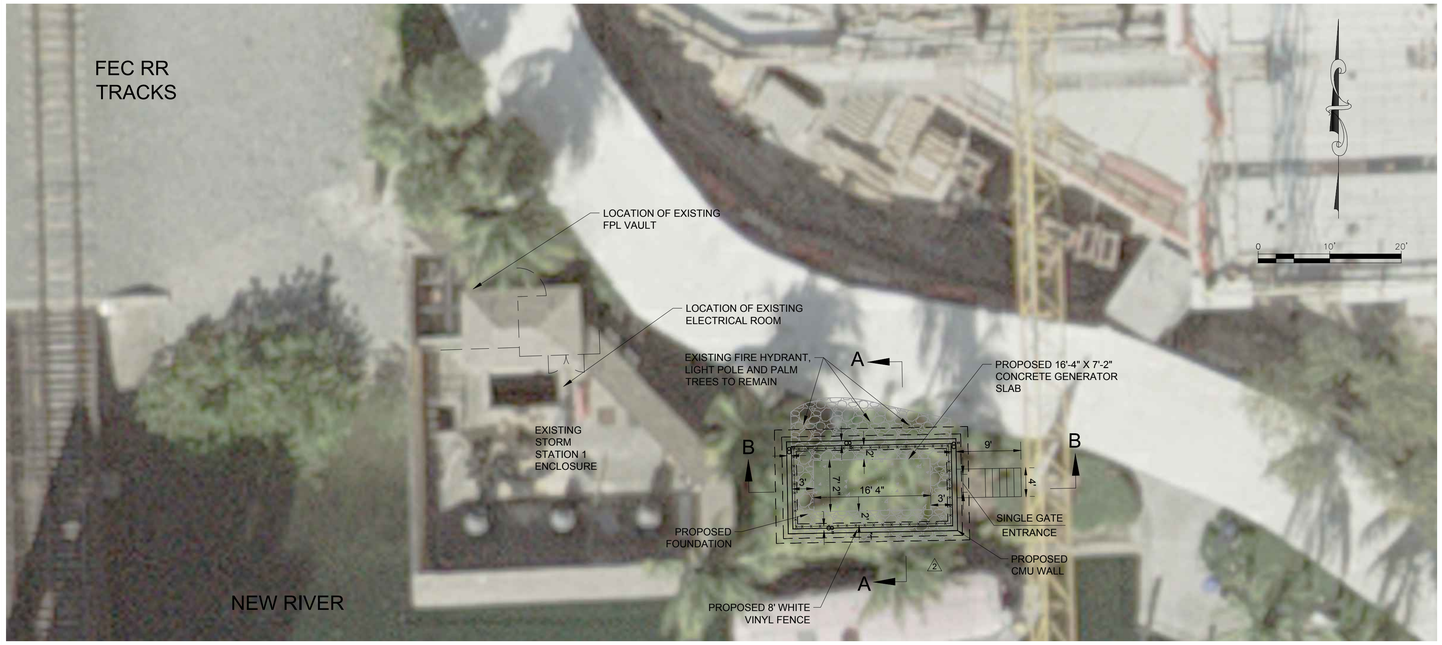

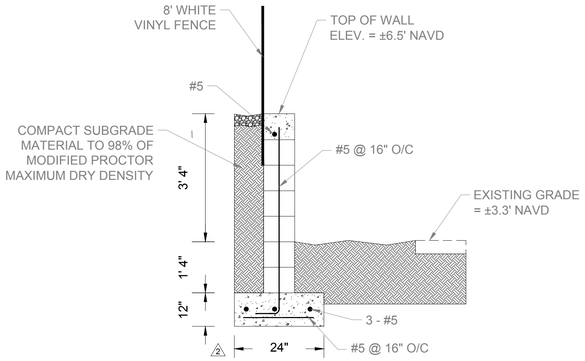

DETAIL 'A'

SCALE: N.T.S.

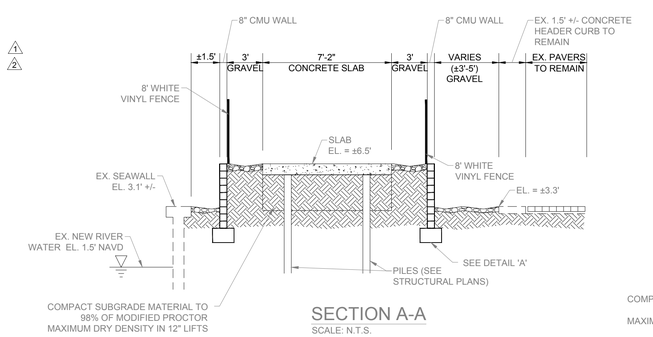

SECTION A-A

SCALE: N.T.S.

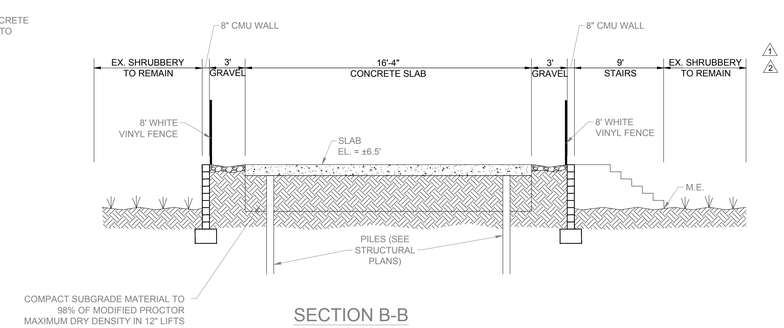

SECTION B-B

SCALE: N.T.S.

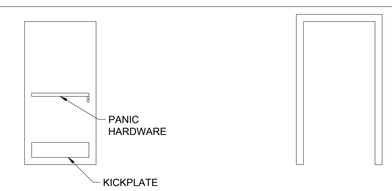

EXISTING DOOR TYPES

N.T.S.

EXISTING DOOR FRAMES

N.T.S.

GENERAL NOTES:

1. HARDWARE SETS SHALL BE PER SPECIFICATION 08710.
2. EXISTING DOOR FRAMES SHALL REMAIN AND BE CLEANED OF ANY OIL AND DIRT THEN UNIFORMLY AND THOROUGHLY ABRADED. DOORS SHALL THEN BE PAINTED USING ONE COAT OF TNEMEC SERIES 66 AT 2-4 MILS AND A FINAL COAT OF TNEMEC SERIES 73 AT 2-4 MILS. DOORS SHALL BE PAINTED PER SPECIFICATIONS.

Always call 811 two full business days before you dig to have underground utilities located and marked.

Sunshine811.com

ALL EXISTING AND PROPOSED ELEVATIONS SHOWN HEREON ARE BASED ON NAVD 1988

ENGINEER: GARY TENN
REG. No: 42099
DATE: 02/02/24
TEL: (954) 739-6400
FAX: N/A

DRAWN BY: | DATE: 02/02/24
DESIGNED BY: | SCALE: 1" 10'
CHECKED BY: | FIELD BOOK:

CITY OF FORT LAUDERDALE
PUBLIC WORKS DEPARTMENT
ENGINEERING
100 North Andrews Avenue, Fort Lauderdale, Florida 33301

REVISIONS

NO.	DATE	BY	CHK'D	DESCRIPTION
1	8/26/21	FA		FTL BLDG DEPT COMMENTS
2	12/10/21	FA		FTL BLDG DEPT COMMENTS

PROJECT # P12478
STORMSTATION 1
FIXED EMERGENCY GENERATOR
1 OF 1
FORT LAUDERDALE

SHEET NO.
C-01

TOTAL: 0
CAD FILE: 0-0072-001-01-SITE FTL
DRAWING FILE NO. 4-144-22

\\CTAFILE02\ENG\PROJECTS\2020\20-0072-001-01 FT LAUD STORMSTATION 1 EMERGENCY GENERATOR\DRAWINGS\20-0072-001-01-SITE FTL.DWG

00STRUCTURAL NOTES

- ELECTRONIC VERSIONS OF STRUCTURAL DRAWINGS ARE THE SOLE, COPYRIGHTED PROPERTY OF MUENGINEERS, INC.
- ELECTRONIC VERSIONS OF DRAWINGS ARE NOT TO BE USED OR TRANSFERRED WITHOUT THE EXPRESS, WRITTEN PERMISSION OF MUENGINEERS, INC.

010000-GENERAL:

1. STRUCTURAL DRAWINGS SHALL BE USED IN CONJUNCTION WITH JOB SPECIFICATIONS AND ARCHITECTURAL, MECHANICAL, ELECTRICAL, PLUMBING, AND SITE DRAWINGS.
2. CONSULT THESE DRAWINGS FOR DEPRESSIONS, AND OTHER DETAILS NOT SHOWN ON STRUCTURAL DRAWINGS.
3. DIMENSIONS AND CONDITIONS MUST BE VERIFIED IN THE FIELD. ANY DISCREPANCIES SHALL BE BROUGHT TO THE ATTENTION OF THE ENGINEER BEFORE PROCEEDING WITH THE AFFECTED PART OF THE WORK.
4. DO NOT SCALE DRAWINGS TO OBTAIN DIMENSIONAL INFORMATION.
5. NOTES, TYPICAL DETAILS AND SCHEDULES APPLY TO ALL STRUCTURAL WORK UNLESS OTHERWISE NOTED. FOR CONDITIONS NOT SPECIFICALLY SHOWN, PROVIDE DETAILS OF A SIMILAR NATURE. VERIFY APPLICABILITY BY SUBMITTING SHOP DRAWINGS FOR REVIEW.
6. AT ALL TIMES THE CONTRACTOR SHALL BE SOLELY RESPONSIBLE FOR THE CONDITIONS OF THE JOBSITE INCLUDING SAFETY OF PERSONS AND PROPERTY. MUENGINEERS' PRESENCE OR REVIEW OF WORK DOES NOT INCLUDE THE ADEQUACY OF THE CONTRACTORS' MEANS OR METHODS OF CONSTRUCTION.
7. SHORING, BRACING AND PROTECTION OF EXISTING AND ADJACENT STRUCTURES DURING CONSTRUCTION IS THE SOLE RESPONSIBILITY OF THE CONTRACTOR. PROTECT AND MAINTAIN THE INDEGRITY OF ADJACENT STREETS, BUILDINGS AND ALL OTHER STRUCTURES.
8. THE STRUCTURE IS DESIGNED TO BE SELF-SUPPORTING AND STABLE AFTER THE STRUCTURE IS COMPLETE.
9. IT IS THE CONTRACTOR'S RESPONSIBILITY TO DETERMINE ERECTION PROCEDURES AND SEQUENCE TO ENSURE SAFETY OF THE BUILDING AND ITS COMPONENTS DURING ERECTION. THIS INCLUDES THE ADDITION OF NECESSARY SHORING, SHEETING, TEMPORARY BRACING, GUYS OR TIEDOWNS.
10. THE CONTRACTOR IS SOLELY RESPONSIBLE FOR INITIATING, MAINTAINING AND SUPERVISING ALL SAFETY PRECAUTIONS AND PROGRAMS IN CONNECTION WITH THE WORK. THE ENGINEER OF RECORD IS NOT RESPONSIBLE FOR ANY MEANS AND METHODS OF CONSTRUCTION OR FOR ANY RELATED SAFETY PRECAUTIONS OR PROGRAMS.

010001-DESIGN LOADS:

1. THE STRUCTURE HAS BEEN DESIGNED IN ACCORDANCE WITH THE **2023** FLORIDA BUILDING CODE, AND APPLICABLE REFERENCE STANDARDS SUCH AS BUT NOT LIMITED TO **ASCE 7-22**
2. THE FOLLOWING SUPERIMPOSED LOADINGS HAVE BEEN UTILIZED:
3. **DG275 GC GENERATOR: 180.6"LX57.5"WX107.3"H**
   - DEAD LOAD 8870 LBS
4. **WIND:**
   - ASCE 7-16
   - **ENCLOSED** BUILDING
   - DIRECTIONALITY FACTOR Kd=**0.85**
   - BROWARD COUNTY: RISK CATEGORY **III**
   - ULTIMATE DESIGN WIND SPEED Vult=**180 MPH** (3-SECOND GUST)
   - NOMINAL DESIGN WIND SPEED Vasd=**140 MPH** (3-SECOND GUST)
   - EXPOSURE **C**

010002-SPECIAL INSPECTIONS:

1. SPECIAL INSPECTION OF THE CONSTRUCTION IS REQUIRED BY THE STATE OF FLORIDA IN ACCORDANCE WITH CHAPTER 553 OF THE FLORIDA STATUTES.
2. CONSTRUCTION SHALL BE INSPECTED IN ACCORDANCE WITH THE SPECIAL INSPECTION PLAN.

010003-REPORTS OF TESTING AND INSPECTION:

1. TESTING REPORTS FOR STRUCTURAL ITEMS AS REQUIRED WITHIN THESE DOCUMENTS AND/OR WITHIN THE SPECIFICATIONS SHALL BE SUBMITTED TO THE ENGINEER OF RECORD IN A TIMELY MANNER IN ELECTRONIC FORMAT.
2. REPORTS OF INSPECTION SHALL BE SUBMITTED TO ENGINEER OF RECORD ON A WEEKLY BASIS AND REPORTS CONTAINING INFORMATION ON NONCONFORMING INSTALLATIONS SHALL BE COPIED TO THE ENGINEER OF RECORD IMMEDIATELY.

010004-SHOP DRAWING REVIEW:

1. SHOP DRAWINGS SHALL BE SUBMITTED IN ELECTRONIC PDF FORMAT ONLY.
2. SHOP DRAWINGS SHALL BE SUBMITTED VIA E-MAIL TO HYPERLINK "mailto:ADMIN@MUENGINEERS.COM" ADMIN@MUENGINEERS.COM.
3. PRINTED PAPER COPIES WILL NOT BE REVIEWED AND RETURNED WITHOUT MUENGINEERS' REVIEW.
4. SHOP DRAWING SUBMITTALS ARE REQUIRED FOR ALL FRAMING SHOWN ON THESE DRAWINGS INCLUDING, BUT NOT LIMITED TO: CONCRETE MIXES, CONCRETE AND REINFORCING.
5. ELECTRONIC VERSIONS OF STRUCTURAL DRAWINGS ARE THE SOLE, COPYRIGHTED PROPERTY OF MUENGINEERS, INC. ELECTRONIC VERSIONS OF DRAWINGS ARE NOT TO BE USED OR TRANSFERRED WITHOUT THE EXPRESS, WRITTEN PERMISSION OF MUENGINEERS, INC. USERS WILL SIGN A RELEASE.
6. SHOP DRAWINGS WILL BE REVIEWED FOR GENERAL COMPLIANCE WITH THE DESIGN INTENT OF THE CONTRACT DOCUMENTS ONLY.
7. IT SHALL BE THE RESPONSIBILITY OF THE CONTRACTOR TO VERIFY COMPLIANCE WITH THE CONTRACT DOCUMENTS AS TO QUANTITY, LENGTH, ELEVATIONS, DIMENSIONS, CONSTRUCTION METHODS, DIMENSIONING, OTHER TRADE REQUIREMENTS ETC. PRIOR TO SUBMITTAL TO THE ARCHITECT/ENGINEER OF.
8. DRAWINGS WITHOUT CONTRACTOR'S APPROVAL STAMP AND WHICH HAVE NOT BEEN REVIEWED BY THE CONTRACTOR WILL BE RETURNED WITHOUT MUENGINEERS' REVIEW.
9. MUENGINEERS RESERVES A TWO-WEEK SHOP DRAWING REVIEW TIME (FROM THE DATE OF RECEIPT).
10. IN CASES OF A CONFLICT, INFORMATION PRESENTED ON STRUCTURAL DRAWINGS SHALL TAKE PRECEDENCE OVER THAT WITHIN SHOP DRAWINGS, UNLESS SPECIFICALLY NOTED BY MUENGINEERS IN WRITING.
11. THROUGH THE PROCESS OF A CURSORY REVIEW, MUENGINEERS ASSUMES NO RESPONSIBILITY FOR DIMENSIONS, QUANTITIES, ERRORS OR OMISSIONS. ANY ERRORS OR OMISSIONS IRRESPECTIVE OF MUENGINEERS' COMMENTS OR DURATION OF THE REVIEW SHALL BE THE RESPONSIBILITY OF AND MUST BE CORRECTED BY THE CONTRACTOR AT NO ADDITIONAL SERVICE CHARGE EVEN IF SUCH WORK WAS DONE IN ACCORDANCE WITH THE SHOP DRAWINGS
12. CHANGES AND ADDITIONS MADE ON RE-SUBMITTALS SHALL BE CLEARLY FLAGGED AND NOTED. THE PURPOSE OF THE RE-SUBMITTALS SHALL BE CLEARLY NOTED ON THE LETTER OF TRANSMITTAL. REVIEW WILL BE LIMITED TO THE FLAGGED AND NOTED ITEMS CAUSING THE RE-SUBMITTAL.

012300-CONTRACTOR PROPOSED CHANGES AND SUBSTITUTIONS:

1. PROPOSED CHANGES OR SUBSTITUTIONS TO STRUCTURAL DETAILS OR PLANS SHALL BE SUBMITTED TO MUENGINEERS FOR REVIEW AND APPROVAL.
2. SUBMITTALS SHALL CONTAIN FULL DOCUMENTATION OF CHANGES OR SUBSTITUTIONS WITH SUPPORTING, SEALED CALCULATIONS (WHERE APPLICABLE).
3. THE REVIEW OF CHANGES AND SUBSTITUTIONS, RE-ANALYSIS AND/OR RE-DRAFTING TO INCORPORATE CHANGES OR SUBSTITUTIONS INTO CONTRACT DOCUMENTS ARE ADDITIONAL SERVICES FOR THE EOR.

CONSTRUCTION COST REVISIONS ARE BETWEEN THE CONTRACTOR AND OWNER AND ARE NOT REVIEWED BY MUENGINEERS

310000-FOUNDATIONS:

1. FOUNDATIONS HAVE BEEN DESIGNED IN ACCORDANCE WITH THE RECOMMENDATIONS OF THE FOLLOWING GEOTECHNICAL REPORT.
   - REPORT NO.: **20-0076-001-01**
   - PREPARED BY: **CRAVEN THOMPSON & ASSOCIATES**
   - TITLED: **FORT LAUDERDALE STORM-STATION 2 FIXED EMERGENCY GENERATOR PAD**
   - DATED: **JANUARY 18, 2021**
   - THIS REPORT SHALL BE CONSIDERED PART OF THE CONTRACT DOCUMENTS
   - SEE THIS REPORT FOR COMPLETE GEOTECHNICAL RECOMMENDATIONS AND INSTALLATION PROCEDURES.
   - ALL SITE PREPARATION, EXCAVATION WORK AND BACK FILL WORK IS TO BE PERFORMED IN STRICT ACCORDANCE WITH THE RECOMMENDATIONS OF THE GEOTECHNICAL REPORT AND THE SUBSURFACE INVESTIGATION.

2. SOILS SUPPORTING FOUNDATIONS SHALL BE INSPECTED AND APPROVED BY A LICENSED GEOTECHNICAL ENGINEER PRIOR TO FOUNDATION REBAR INSTALLATION AND PLACING OF CONCRETE.
3. ALL SOIL BEARING SURFACES SHALL BE INSPECTED AND APPROVED BY A GEOTECHNICAL ENGINEER IMMEDIATELY PRIOR TO THE PLACEMENT OF CONCRETE.
4. THE GEOTECHNICAL ENGINEER SHALL ISSUE AN APPROVAL IN WRITING INDICATING THAT THE SOIL HAS BEEN PREPARED AND THAT THE HELICAL PILES HAVE BEEN INSTALLED IN ACCORDANCE WITH THE GEOTECHNICAL REPORT
5. DEWATERING OF THE SITE DURING CONSTRUCTION IS THE SOLE RESPONSIBILITY OF THE CONTRACTOR. PRECAUTIONS SHALL BE TAKEN BY THE CONTRACTOR NOT TO UNDERMINE EXISTING FOUNDATIONS. METHOD OF DEWATERING AND CALCULATIONS FOR THE APPROPRIATE SYSTEM ARE THE SOLE RESPONSIBILITY OF THE CONTRACTOR.

316200-HELICAL PILES:

1. HELICAL PILES SHALL BE DESIGNED BY A REGISTERED FLORIDA GEOTECHNICAL ENGINEER AND SIGNED AND SEALED SUBMITTALS INCLUDING DESIGN CALCULATION, SECTIONS AND DETAILS SHALL BE PROVIDED TO MUENGINEERS FOR REVIEW AND APPROVAL PRIOR TO FABRICATION AND INSTALLATION
2. SHALL BE INSTALLED IN ACCORDANCE WITH THE GEOTECHNICAL RECOMMENDATIONS AND INSTALLATION PROCEDURES CONTAINED IN THE GEOTECHNICAL REPORT AND BY THE SPECIALTY ENGINEER RECOMMENDATIONS.
3. HELICAL PILE INSTALLATION MUST BE MONITORED, DOCUMENTED, INSPECTED AND APPROVED BY THE PROJECT'S GEOTECHNICAL ENGINEER OF RECORD PRIOR TO COMMENCING WITH PILE CAP CONSTRUCTION.
4. THE PROJECT GEOTECHNICAL ENGINEER OF RECORD SHALL ISSUE AN APPROVAL IN WRITING INDICATING THAT THE HELICAL PILES HAVE BEEN INSTALLED IN ACCORDANCE WITH THE GEOTECHNICAL REPORT AND ARE ADEQUATE TO SAFELY SUPPORT THE DESIGN LOADS INDICATED IN THE PROJECTS GEOTECHNICAL REPORT.
5. PILING
6. THE HELICAL PIER SHALL PENETRATE INTO THE LIMESTONE FORMATION
7. PIERS SHOULD ACHIEVE THE REQUIRED CAPACITY AT TOTAL BELOW GROUND (EXISTING) DEPTHS OF MINIMUM **22** TO **30** FEET.
8. THE LEAD SECTION SHOULD CONSIST OF A **3** INCH CIRCULAR STEEL SHAFT TO WHICH ARE AFFIXED MINIMUM THREE HELIX PLATES WITH DIAMETERS OF 8,10 AND 12 INCHES.
9. CUTTING TEETH SHOULD BE MOUNTED AS NEEDED ON THE PLATES TO FACILITATE ADVANCEMENT OF THE LEAD SECTION INTO THE CARBONATE ROCK FORMATION.
6. PILE CAPACITY:
   - THE DESIGN IS BASED ON A MAXIMUM WORKING CAPACITY OF **20** KIPS PER PILE IN COMPRESSION AND **10** KIPS PER PILE IN TENSION.
7. LOCATION OF PILES:
   - WHEN IN CLUSTERS OF TWO OR MORE, INDIVIDUAL PILES SHALL BE INSTALLED WITHIN 3 INCHES OF DESIGN LOCATION.
   - THE PIERS SHOULD BE INSTALLED AT CENTER TO CENTER SPACINGS OF NOT LESS THAN THREE FEET.
   - THE CUMULATIVE LOCATION OF PILE GROUP CENTER OF GRAVITY SHALL NOT EXCEED 1-1/2".
   - SINGLE PILES SHALL BE INSTALLED WITHIN 1-1/2 INCHES OF DESIGN LOCATION.
   - VARIATION FROM PLUMB SHALL NOT EXCEED 1/2 INCH IN TWO FEET.
   - AN AS-BUILT SURVEY OF PILE LOCATIONS SHALL BE PERFORMED BY A FLORIDA REGISTERED LAND SURVEYOR.
   - PILES SHALL BE LOCATED ON THE AS-BUILT DRAWINGS HORIZONTALLY AND VERTICALLY FROM THE DESIGN LOCATION.
   - SUBMIT THE AS-BUILT DRAWINGS TO THE STRUCTURAL ENGINEER FOR APPROVAL.
   - CONTRACTOR IS RESPONSIBLE FOR ENGINEERING COSTS ASSOCIATED WITH RE-ANALYSIS AND REDESIGNS CAUSED BY PILES IMPROPERLY INSTALLED.

033001-CONCRETE

1. CONCRETE
   - SHALL BE PER AN APPROVED MIX DESIGN PROPORTIONED TO ACHIEVE A STRENGTH AT 28 DAYS AS LISTED BELOW WITH A PLASTIC AND WORKABLE MIX:
     - **3000** psi FOR RC SLAB.
   - WATER/CEMENT RATIO FOR CONCRETE OF RC SLAB SHALL NOT EXCEED 0.40 BY WEIGHT.
   - CONCRETE MIXES FOR ALL EXPOSED CONCRETE RC SLAB SHALL HAVE BARRIER ONE POROSITY INHIBITING ADMIXTURE OR A BY THE ENGINEER OF RECORD APPROVED ALTERNATE ADMIXTURE INCLUDED IN THE MIX DESIGN.
   - THE GC SHALL PROVIDE A SHOP DRAWINGS SUBMITTAL AND FOLLOW ALL BARRIER ONE'S REQUIREMENTS FOR INSTALLATION AND TESTING. INCLUDING COORDINATING THE REQUIRED TEST CYLINDERS.
   - CONCRETE SHALL BE PLACED AND CURED ACCORDING TO ACI STANDARDS AND SPECIFICATIONS.
   - SUBMIT PROPOSED MIX DESIGN WITH RECENT FIELD CYLINDER OR LAB TESTS FOR REVIEW PRIOR TO USE.
   - MIX SHALL BE UNIQUELY IDENTIFIED BY MIX NUMBER OR OTHER POSITIVE IDENTIFICATION.
   - MIX SHALL MEET THE REQUIREMENTS OF ASTM C33 FOR COARSE AGGREGATE.
   - CONCRETE SHALL COMPLY WITH THE REQUIREMENTS OF ASTM STANDARD C94 FOR MEASURING, MIXING, TRANSPORTING, ETC.
   - MIX DESIGN SUBMITTALS FOR EXPOSED CONCRETE RC SLAB MUST HIGHLIGHT THE INCLUSION OF BARRIER ONE ADMIXTURE.
   - THE GC SHALL MUST FOLLOW ALL ADMIXTURE MANUFACTURE REQUIREMENTS FOR MIXING, INSTALLATION AND TESTING. INCLUDING COORDINATING THE REQUIRED TEST CYLINDERS.
   - CONCRETE TICKETS SHALL BE TIME STAMPED WHEN CONCRETE IS BATCHED.
   - THE MAXIMUM TIME ALLOWED FROM THE TIME THE MIXING WATER IS ADDED UNTIL IT IS DEPOSITED IN ITS FINAL POSITION SHALL NOT EXCEED ONE AND ONE HALF (1-1/2) HOURS.
   - IF FOR ANY REASON THERE IS A LONGER DELAY THAN THAT STATED ABOVE, THE CONCRETE SHALL BE DISCARDED.
   - IT SHALL BE THE RESPONSIBILITY OF THE TESTING LAB TO NOTIFY THE OWNER'S REPRESENTATIVE AND THE CONTRACTOR OF ANY NONCOMPLIANCE WITH THE ABOVE.

033001-CONCRETE CON'T

   - SLABS SHALL BE CURED USING A DISSIPATING CURING COMPOUND MEETING ASTM STANDARD C309 TYPE 1-D AND SHALL HAVE A FUGITIVE DYE. THE COMPOUND SHALL BE PLACED AS SOON AS THE FINISHING IS COMPLETED OR AS SOON AS THE WATER HAS LEFT THE UNFINISHED CONCRETE. SCUFFED OR BROKEN AREAS IN THE CURING MEMBRANE SHALL BE RECOATED DAILY. CALCIUM CHLORIDES SHALL NOT BE UTILIZED; OTHER ADMIXTURES MAY BE USED ONLY WITH THE APPROVAL OF THE ENGINEER.
   - CONCRETE MIX DESIGNS SHALL INCLUDE A WRITTEN DESCRIPTION INDICATING WHERE EACH PARTICULAR MIX IS TO BE PLACED WITHIN THE STRUCTURE.
   - CONCRETE DESIGN MIX SUBMITTALS SHALL INCLUDE TESTED, STATISTICAL BACK-UP DATA AS PER CHAPTER 5 OF ACI 318.
2. CONCRETE TESTING:
   - AN INDEPENDENT TESTING LABORATORY SHALL PERFORM THE FOLLOWING TESTS ON CAST IN PLACE CONCRETE:
   - ASTM C143: "STANDARD TEST METHOD FOR SLUMP OF PORTLAND CEMENT CONCRETE." MAXIMUM SLUMP SHALL BE **5** INCHES
   - ASTM C39: "STANDARD TEST METHOD FOR COMPRESSIVE STRENGTH OF CYLINDRICAL CONCRETE SPECIMENS." A SEPARATE TEST SHALL BE CONDUCTED FOR EACH CLASS, FOR EVERY 50 CUBIC YARDS (OR FRACTION THEREOF), PLACED PER DAY. REQUIRED CYLINDER(S) QUANTITIES AND TEST AGE AS FOLLOWS:
     - 1 AT 3 DAYS
     - 1 AT 7 DAYS
     - 2 AT 28 DAYS
   - ONE ADDITIONAL RESERVE CYLINDER TO BE TESTED UNDER THE DIRECTION OF THE ENGINEER, IF REQUIRED. IF 28 DAY STRENGTH IS ACHIEVED, THE ADDITIONAL CYLINDER(S) MAY BE DISCARDED.
3. REINFORCING STEEL:
   - SHALL BE ASTM A615 GRADE 60 DEFORMED BARS, FREE FROM OIL, SCALE AND RUST AND PLACED IN ACCORDANCE WITH THE TYPICAL BENDING DIAGRAM AND PLACING DETAILS OF ACI STANDARDS AND SPECIFICATIONS.
   - SECURE APPROVAL OF SHOP DRAWINGS PRIOR TO COMMENCING FABRICATION.
4. CORROSION RESISTANT REINFORCING STEEL:
   - TOP BARS AT EXPOSED AREAS AS SHOWN ON STRUCTURAL PLANS SHALL BE HOT DIPPED GALVANIZED.
5. CHEMICAL (ADHESIVE) ANCHORS:
   - SHALL BE AN EQUAL TWO-PART EPOXY POLYMER INJECTION SYSTEM, SUCH AS RAMSET "EPCON", POWERS RAWL "POWER-FAST" CARTRIDGE SYSTEM, DUR-O-WAL "DUR-O-PAIR" EPOXY ANCHOR, OR HILTI HSE2411 EPOXY DOWELING SYSTEM, OR ENGINEER APPROVED SUBSTITUTION, INSTALLED IN ACCORDANCE WITH MANUFACTURERS INSTRUCTIONS.
   - INSTALLERS SHALL BE TRAINED BY THE MANUFACTURER'S REPRESENTATIVE.
6. POST-INSTALLED ANCHORS:
   - POST-INSTALLED ANCHORS SHALL ONLY BE USED WHERE SPECIFIED ON THE DRAWINGS.
   - CONTRACTOR SHALL OBTAIN APPROVAL FROM ENGINEER OF RECORD PRIOR TO USING POST-INSTALLED ANCHORS FOR MISSING OR MISPLACED CAST-IN-PLACE ANCHORS.
   - UNLESS SPECIFIED OTHERWISE, ANCHORS SHALL BE EMBEDDED IN THE APPROPRIATE SUBSTRATE WITH A MINIMUM EMBEDMENT OF 8 TIMES THE NOMINAL ANCHOR DIAMETER OR THE EMBEDMENT REQUIRED TO SUPPORT THE INTENDED LOAD.
   - ANCHORS SHALL BE INSTALLED PER THE MANUFACTURER'S INSTALLATION INSTRUCTIONS AT NOT LESS THAN MINIMUM EDGE DISTANCE AND/OR SPACINGS INDICATED IN THE MANUFACTURER'S LITERATURE.
   - SUBSTITUTION REQUESTS, FOR PRODUCTS OTHER THAN THOSE LISTED BELOW, SHALL BE SUBMITTED TO THE ENGINEER WITH CALCULATIONS THAT ARE PREPARED & SEALED BY A REGISTERED PROFESSIONAL ENGINEER SHOWING THAT THE SUBSTITUTED PRODUCT WILL ACHIEVE AN EQUIVALENT CAPACITY USING THE APPROPRIATE DESIGN PROCEDURE REQUIRED BY THE BUILDING CODE.
   - ACCEPTABLE PRODUCTS ARE:
     - EXPANSION ANCHORS FOR NON-CRACKED CONCRETE ONLY:
       - WEDGE-ALL (WA), BY SIMPSON STRONG-TIE
       - KWIK BOLT 3, BY HILTI
     - CRACKED CONCRETE MECHANICAL ANCHORS:
       - STRONG-BOLT (STB), BY SIMPSON STRONG-TIE
       - KWIK BOLT (TZ), BY HILTI
     - SCREW ANCHORS:
       - TITEN HD (THD), BY SIMPSON STRONG-TIE
       - HUS-H, BY HILTI
     - ADHESIVE ANCHORS FOR ANCHORING INTO SOLID BASE MATERIAL
       - ACRYLIC-TIE (AT)
       - SET EPOXY-TIE (SET) WITH RETROFIT BOLTS (RFB), BY SIMPSON STRONG-TIE
       - HIT RE 500, BY HILTI
     - ADHESIVE ANCHORS FOR ANCHORING INTO HOLLOW BASE MATERIAL
       - CONTACT ENGINEER OF RECORD
7. CONCRETE FORMWORK AND SHORING INCLUDING BUT NOT LIMITED TO CONCRETE SLABS:
   - DESIGN, ERECTION AND REMOVAL OF ALL FORMWORK, SHORES AND RESHORES SHALL MEET REQUIREMENTS SET FORTH IN ACI STANDARDS 347 AND 301.
   - UNLESS NOTED OTHERWISE ON THE STRUCTURAL DRAWINGS, FORMS SHALL NOT BE REMOVED PRIOR TO STRUCTURAL CONCRETE REACHING A MINIMUM OF THREE-QUARTERS (SLABS) OF ITS SPECIFIED 28-DAY COMPRESSIVE STRENGTH.
8. PENETRATIONS:
   - THE CONTRACTOR SHALL VERIFY THE DIMENSIONS AND LOCATIONS OF ALL OPENINGS, PIPE SLEEVES, ETC. AS REQUIRED BY ALL TRADES, BEFORE THE CONCRETE IS POURED. THE CONTRACTOR SHALL CONSULT THE CIVIL, MECHANICAL, AND ELECTRICAL DRAWINGS, AS WELL AS THE STRUCTURAL DRAWINGS FOR THE LOCATION, NUMBER, AND SIZE OF ALL OPENINGS, SLEEVES, ETC. HOWEVER, OPENINGS NOT SHOWN ON THE STRUCTURAL DRAWINGS SHALL BE INSTALLED ONLY AFTER APPROVAL BY MUENGINEERS, INC.
   - NO PENETRATIONS SHALL BE MADE IN ANY STRUCTURAL MEMBERS OTHER THAN THOSE LOCATED ON THE STRUCTURAL DRAWINGS WITHOUT PREVIOUS APPROVAL OF THE ENGINEER.
   - CONTRACTOR SHOULD SUBMIT SLAB DRAWINGS INDICATING ANY CONCENTRATION OF PIPES, OPENINGS OR PENETRATIONS NOT SHOWN ON THE STRUCTURAL DRAWINGS PRIOR TO CONCRETE POURS.
9. PLUMBING SLEEVES:
   - SLEEVE LOCATIONS AND SIZES MUST BE APPROVED BY THE ENGINEER PRIOR TO PLACEMENT.
   - MINIMUM SLEEVE SPACING SHALL BE THREE DIAMETERS CENTER TO CENTER OF THE LARGER SLEEVE OR 6" CLEAR BETWEEN SLEEVES, WHICHEVER IS GREATER.
   - SLEEVES OR GROUPS OF SLEEVES 16 INCH IN DIAMETER AND LARGER SHALL BE TREATED AS A SLAB OPENING AND REINFORCED PER TYPICAL OPENING REINFORCING DETAILS.
10. EMBEDDED CONDUITS:
   - LOCATIONS AND SIZES OF CONDUIT MUST BE APPROVED BY THE ENGINEER PRIOR TO PLACEMENT. WITHIN SLABS, BEAMS OR WALLS.
   - CONDUIT SHALL OCCUPY ONLY THE MIDDLE ONE-THIRD OF THE MEMBER DEPTH OR THICKNESS.
   - MAXIMUM CONDUIT O.D. FOR SINGLE CONDUITS OR SUM OF O.D.'S FOR MULTIPLE CONDUITS THAT CROSS SHALL BE NO LARGER THAN ONE-THIRD THE SLAB DEPTH.
   - PARALLEL CONDUITS SHALL BE SPACED WITH A MINIMUM OF 3 DIAMETERS CLEAR.
   - CONDUITS SHALL BE A MINIMUM OF ONE DIAMETER AWAY FROM AND SHALL NOT INTERFERE WITH OR DISPLACE ANY REINFORCING.
   - CONDUIT SHALL NOT BE TIED TO REINFORCING.
   - CONDUIT PLACEMENT SHALL NOT IMPAIR THE STRENGTH OF THE CONSTRUCTION AS JUDGED BY THE ENGINEER.

ABBREVIATIONS:

THE FOLLOWING ABBREVIATIONS MAY BE USED IN THE DRAWINGS.

#	NUMBER
&	AND
@	AT
ABV.	ABOVE
ADDL	ADDITIONAL
CC	CONCRETE COVER
C/C	CENTER TO CENTER SPACING
CONC	CONCRETE
DIA	DIAMETER
EA	EACH
FDTN	FOUNDATION
HP	HELICAL PILE
PL	PLATE
RC	REINFORCED CONCRETE
SPEC	SPECIFICATION
SQ	SQUARE
TO	TOP OF
TOC	TOP OF CONCRETE
TOS	TOP OF STEEL, TOP OF SLAB
TYP	TYPICAL
W/	WITH
W/O	WITHOUT

LEGENDS

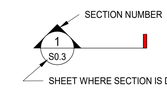

SECTION MARK

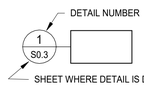

DETAIL MARK

SHEET INDEX

SHT NO.	DESCRIPTION
S-01	STRUCTURAL NOTES
S-02	GROUND FLOOR PLAN & SECTIONS

MUEngineers, Inc.
Certificate of Authorization No.29348
CONSULTING STRUCTURAL ENGINEERS
3440 N.E. 12TH AVENUE
OAKLAND PARK, FL 33334
PH: 954-324-4730

RICARDO A. MADRIZ
FL P.E. # 68444
FEBRUARY 09, 2024

RICARDO A. MADRIZ STATE OF FLORIDA, PROFESSIONAL ENGINEER, LICENSE NO: 68444

THIS ITEM HAS BEEN ELECTRONICALLY SIGNED AND SEALED BY RICARDO A. MADRIZ, P.E. ON THE DATE INDICATED HERE USING A SHA AUTHENTICATION CODE.

PRINTED COPIES OF THIS DOCUMENT ARE NOT CONSIDERED SIGNED AND SEALED AND THE SHA AUTHENTICATION CODE MAY BE VERIFIED ON ANY ELECTRONIC COPIES.

NOTE: MUE19022602
THESE DRAWINGS, ALONG WITH THE ARCHITECTURAL DRAWINGS, AND PROJECT MANUAL CONSTITUTE A SINGULAR CONTRACT DOCUMENT AND MUST BE USED TOGETHER IN THEIR ENTIRETY IN THE CONSTRUCTION OF THIS PROJECT.
TO THE BEST OF THE ENGINEER'S KNOWLEDGE, THE PLANS AND SPECIFICATIONS COMPLY WITH THE APPLICABLE MINIMUM BUILDING CODES AND THE APPLICABLE FIRE SAFETY STANDARDS AS DETERMINED BY THE LOCAL AUTHORITY IN ACCORDANCE WITH CHAPTER 553 AND CHAPTER 633 OF THE FLORIDA STATUTES.
DETAILS AND VIEWS ON THIS SHEET ARE TO SCALE INDICATED WHEN PRINTED ON A 24"X36" SIZE SHEET.

DRAWN BY:	DATE:
TW	02/09/2024
DESIGNED BY:	SCALE:
TW	1" = 1'-0"
CHECKED BY:	
RM	
FIELD BOOK:	

REVISIONS

NO.	DATE	BY	CHK'D	DESCRIPTION

CITY OF FORT LAUDERDALE
PUBLIC WORKS DEPARTMENT
ENGINEERING & ARCHITECTURE
100 North Andrews Avenue, Fort Lauderdale, Florida 33301

PROJECT # 12478
STORMSTATION 1
FIXED EMERGENCY GENERATORS
STRUCTURAL NOTES
300 SW 1ST AVE, FT LAUDERDALE, FL 33301

SHEET NO.
S-01

TOTAL:

CAD FILE:

DRAWING TITLE: CAM #24-1029 Exhibit 1B

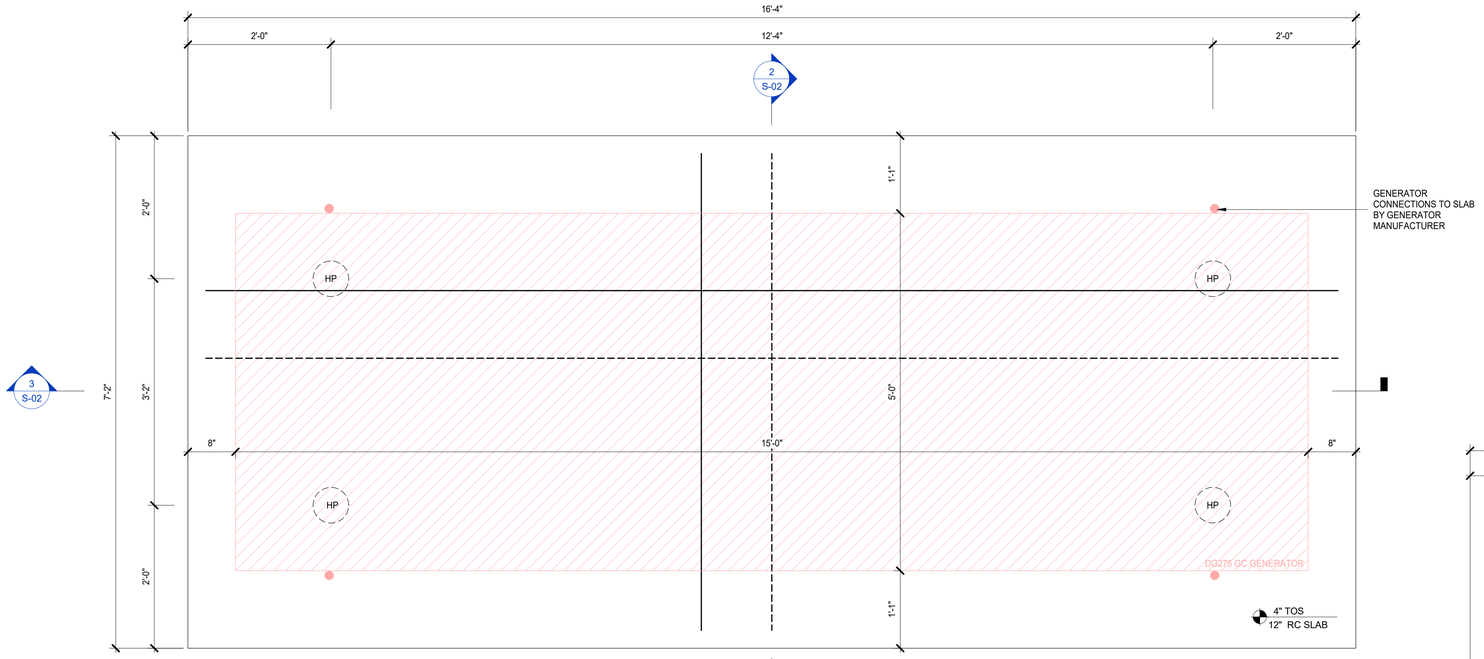

1 S-02 GROUND FLOOR PLAN
1" = 1'-0"

GROUND FLOOR PLAN NOTES:

1. FOR DIMENSIONS NOT SHOWN SEE FOUNDATION PLAN AND CIVIL DRAWINGS.
2. VERIFY ALL DIMENSIONS, ELEVATIONS AND SLAB FINISHES WITH CIVIL DRAWINGS BEFORE COMMENCING CONSTRUCTION.
3. PLUMBING PIPES, EXFILTRATION PIPES, ETC. SHALL MUST NOT BE LOCATED BELOW OR INSIDE OF THE FOUNDATION SLABS.
4. COORDINATE ALL SLAB OPENING SIZES AND LOCATIONS WITH ARCHITECTURAL AND CIVIL DRAWINGS.
5. ELEVATIONS SHOWN ON THE STRUCTURAL DRAWINGS REFER TO ELEVATION +0'-0" WHICH CORRESPONDS TO THE TOP OF THE FINISHED GRADE.
6. BOTTOM OF THE EMBED PLATES MUST NOT LESS THAN 3" ABOVE THE BASE OF THE RC SLAB.
7. SLAB CURING IS REQUIRED. SEE STRUCTURAL NOTES.
8. CONCRETE MIXES FOR ALL EXTERIOR CONCRETE COMPONENTS SHALL INCLUDE BARRIER ONE CONCRETE ADMIXTURE IN THEIR MIX DESIGNS.
9. PROVIDE (1) #5 CONTINUOUS TOP AND BOTTOM AT ALL SLAB EDGES.
10. REINFORCING BARS SHOWN ON PLANS AS SOLID LINES ARE TOP BARS AND BARS SHOWN AS DASHED LINES ARE BOTTOM BARS UNLESS SPECIFICALLY SHOWN OTHERWISE.
11. ALL REINFORCING BARS IN REINFORCING IN FOUNDATION SLABS MUST BE GALVANIZED REINFORCING.
12. (HP) REPRESENTS 3" DIAMETER, 20 KIPS BATTERED HELICAL PILE.

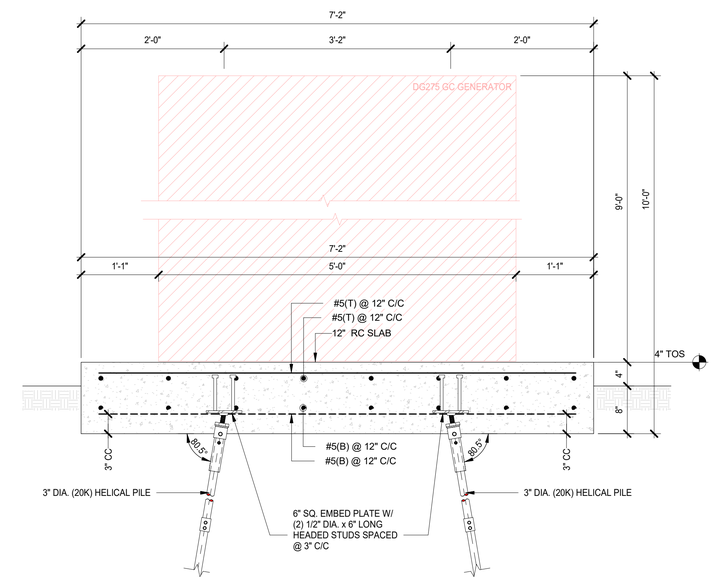

2 S-02 2/S-2.00
1" = 1'-0"

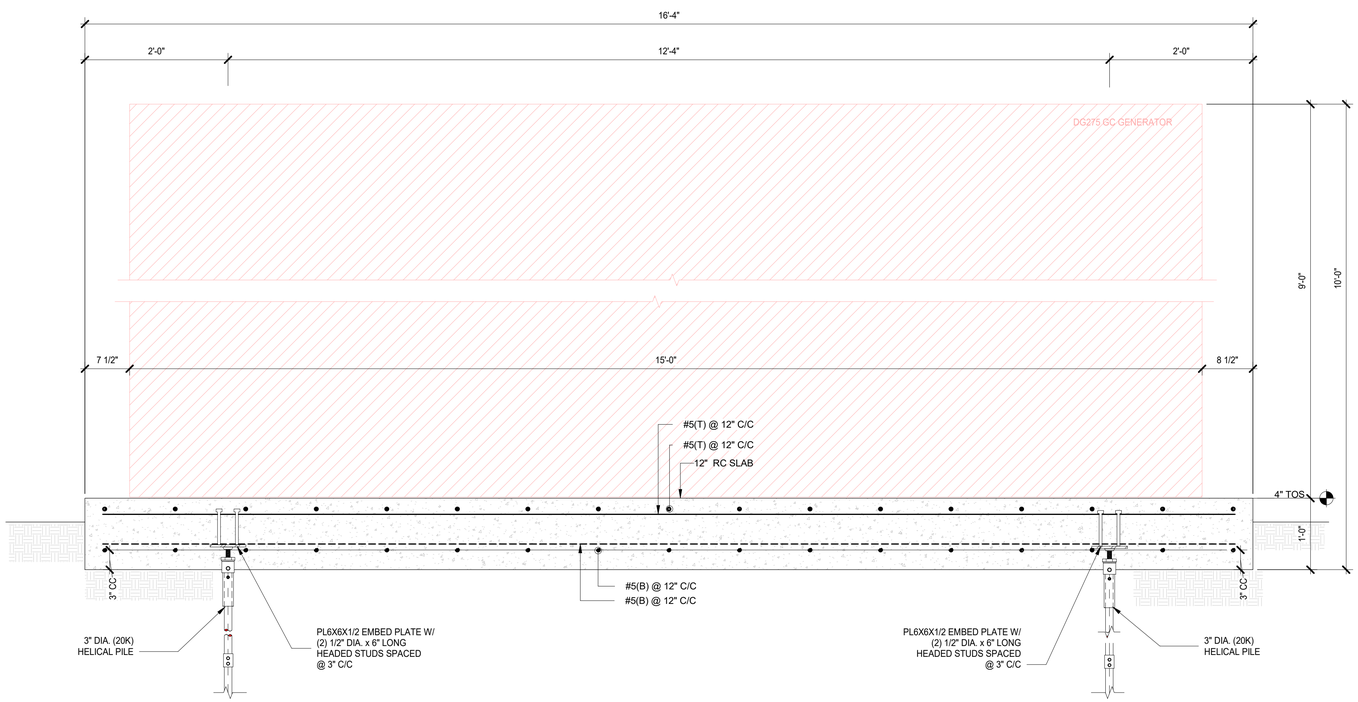

3 S-02 3/S-2.00
1" = 1'-0"

MUEngineers, Inc.
Certificate of Authorization No.29348
CONSULTING STRUCTURAL ENGINEERS
3440 N.E. 12TH AVENUE
OAKLAND PARK, FL 33334
PH: 954-324-4730

RICARDO A. MADRIZ
FL P.E. # 68444
FEBRUARY 09, 2024
RICARDO A. MADRIZ STATE OF FLORIDA, PROFESSIONAL ENGINEER, LICENSE NO: 68444

THIS ITEM HAS BEEN ELECTRONICALLY SIGNED AND SEALED BY RICARDO A. MADRIZ, P.E. ON THE DATE INDICATED HERE USING A SHA AUTHENTICATION CODE.

PRINTED COPIES OF THIS DOCUMENT ARE NOT CONSIDERED SIGNED AND SEALED AND THE SHA AUTHENTICATION CODE MAY BE VERIFIED ON ANY ELECTRONIC COPIES.

NOTE: MUE19022602
THESE DRAWINGS, ALONG WITH THE ARCHITECTURAL DRAWINGS, AND PROJECT MANUAL CONSTITUTE A SINGULAR CONTRACT DOCUMENT AND MUST BE USED TOGETHER IN THEIR ENTIRETY IN THE CONSTRUCTION OF THIS PROJECT.
TO THE BEST OF THE ENGINEER'S KNOWLEDGE, THE PLANS AND SPECIFICATIONS COMPLY WITH THE APPLICABLE MINIMUM BUILDING CODES AND THE APPLICABLE FIRE SAFETY STANDARDS AS DETERMINED BY THE LOCAL AUTHORITY IN ACCORDANCE WITH CHAPTER 553 AND CHAPTER 633 OF THE FLORIDA STATUTES.
DETAILS AND VIEWS ON THIS SHEET ARE TO SCALE INDICATED WHEN PRINTED ON A 24"X36" SIZE SHEET.

DATE: 02/09/2024
SCALE: As indicated
DRAWN BY: DW
DESIGNED BY: DW
CHECKED BY: RM
FIELD BOOK:

CITY OF FORT LAUDERDALE
PUBLIC WORKS DEPARTMENT
ENGINEERING & ARCHITECTURE
100 North Andrews Avenue, Fort Lauderdale, Florida 33301

REVISIONS

NO.	DATE	BY	CHK'D	DESCRIPTION

PROJECT # 12478
STORMSTATION 1
FIXED EMERGENCY GENERATORS
GROUND FLOOR PLAN & SECTIONS
300 SW 1ST AVE, FT LAUDERDALE, FL 33301

SHEET NO.
S-02
TOTAL:
CAD FILE:
DRAWING

ELECTRICAL LEGEND

SYMBOL	DESCRIPTION
	CONNECTION POINT TO EQUIPMENT SPECIFIED, FURNISHED AND INSTALLED UNDER OTHER SECTIONS. RACEWAY, CONDUCTOR AND CONNECTION IN THIS SECTION.
1"C,2#12,1#12G 1"C,1-25/C TYPE 1	INDICATES RACEWAY AND CIRCUIT CONDUCTORS. FIRST NUMBER IS RACEWAY SIZE. THE FOLLOWING NUMBERS ARE THE CONDUCTOR QUANTITIES, SIZES, AND TYPES.
5	MOTOR, SQUIRREL CAGE INDUCTION – HORSEPOWER INDICATED
X	LUMINAIRE AND POLE – SEE SCHEDULE FOR TYPE
X	WALL MOUNTED LUMINAIRE – SEE SCHEDULE FOR TYPE
X Y Z (TYP)	LIGHTING FIXTURE POWER AND SWITCHING LEGEND X=FIXTURE TYPE Y=PANEL-CIRCUIT BRKR Z=SWITCH IF NO Z INDICATED, CONNECT DIRECTLY TO CIRCUIT BREAKER.
	GROUND ROD – 3/4" x 20' COPPER CLAD UNLESS OTHERWISE NOTED
	GROUND ROD WITH TEST WELL – 3/4" x 20' COPPER CLAD UNLESS OTHERWISE NOTED
S	WALL SWITCH: 2– DOUBLE POLE, 3– THREE WAY, 4– FOUR WAY, WP–WEATHERPROOF, P– PILOT LIGHT, K– KEY OPERATED, D– DIMMER, CRE–CORROSION RESISTANT
S_M	MANUAL MOTOR STARTER SWITCH, NEMA 4X UNLESS OTHERWISE NOTED. NUMBER OF POLES AS REQUIRED
G	GENERATOR
	CONVENIENCE RECEPTACLE 20A RATED– DUPLEX UNLESS SPECIFIED OTHERWISE WP–WEATHERPROOF, C– CLOCK HANGER, TL– TWIST LOCK, CRE–CORROSION RESISTANT, GFI–GROUND FAULT INTERRUPTER
J	JUNCTION BOX NEMA 12 ENCLOSURE UNLESS INDICATED OTHERWISE. 4X = NEMA 4X SS
[B2] LPA-2	CONDUIT/CONDUCTOR – REFER TO CIRCUIT SCHEDULE HOME RUN – PANEL AND CIRCUIT NUMBER SHOWN
	DIRECT BURIED UNDERGROUND CONDUIT SEE SPECIFICATION
G	GROUND WIRE, 4/0 BARE TINNED COPPER (BTC) MAIN GROUND WITH MINIMUM #4 BTC GROUND TAIL UNLESS OTHERWISE NOTED
	EXPOSED CONDUIT AND CONDUCTORS
YCX	YARD CONDUIT. REFER TO YARD CONDUIT SCHEDULE
	DIRECTIONAL BORED CONDUIT
	CONDUIT, STUBBED AND CAPPED AS SHOWN
30 4X	NONFUSED DISCONNECT SWITCH, SIZE INDICATED, 3 POLE UNLESS INDICATED OTHERWISE, NEMA 12 ENCLOSURE, 4X = NEMA 4X 316 STAINLESS STEEL
F 40/60 4X	FUSED DISCONNECT SWITCH, SIZE INDICATED (60 = SWITCH RATING: 40 = FUSE RATING) 3 POLE UNLESS INDICATED OTHERWISE, NEMA 12 ENCLOSURE, 4X = NEMA 4X 316 STAINLESS STEEL
2 4X	MAGNETIC STARTER, NEMA SIZE INDICATED, NEMA 12 ENCLOSURE, UNLESS INDICATED OTHERWISE. SEE CONTROL DIAGRAM. 4X = NEMA 4X 316 STAINLESS STEEL
2 4X	COMBINATION (FUSE OR CIRCUIT BREAKER AS INDICATED). MAGNETIC STARTER, NEMA SIZE INDICATED, NEMA 12 ENCLOSURE UNLESS INDICATED OTHERWISE. SEE CONTROL SCHEMATIC DIAGRAM. 4X = NEMA 4X 316 STAINLESS STEEL

SYMBOL	DESCRIPTION
120V or 480–120/208V 15 KVA, 3ø	TRANSFORMER, VOLTAGES, PHASE AND RATING INDICATED AS APPLICABLE
	PUSH–BUTTON SWITCH, MOMENTARY CONTACT, NORMALLY OPEN
	PUSH–BUTTON SWITCH, MOMENTARY CONTACT, NORMALLY CLOSED
	REMOTE DEVICE
H O A 1 XOO 2 OOX	SELECTOR SWITCH: MAINTAINED CONTACT WITH CONTACT POSITION INDICATED, CHART IDENTIFIES OPERATION
CRX	CONTACT – NORMALLY OPEN WITH COIL INDICATED
CRX	CONTACT – NORMALLY CLOSED WITH COIL INDICATED
	OVERLOAD RELAY HEATER
1	MAGNETIC STARTER WITH NEMA SIZE INDICATED
MCP	MOTOR CIRCUIT PROTECTOR, MAGNETIC, 3 POLE UNLESS INDICATED OTHERWISE.
400	CIRCUIT BREAKER, THERMAL MAGNETIC TRIP SHOWN, 3 POLE UNLESS INDICATED OTHERWISE.
400 225	FUSED SWITCH, SWITCH AND FUSE CURRENT RATING INDICATED, 3 POLE UNLESS INDICATED OTHERWISE.
100	SWITCH – CURRENT RATING INDICATED, 3 POLE UNLESS INDICATED OTHERWISE.
TVSS	TRANSIENT VOLTAGE SURGE SUPPRESSION
	DEMOLITION TO BE REMOVED OR DELETED
	FUSE
CRX	CONTROL RELAY, X=SEQUENTIAL NUMBER
LRX (L)	LATCHING RELAY, X=SEQUENTIAL NUMBER L – LATCH, U – UNLATCH
	LINE WEIGHT NEW EXISTING

ABBREVIATIONS

ABBREVIATIONS	DESCRIPTION	ABBREVIATIONS	DESCRIPTION
ACCP	ACCESS CONTROL – CONTROL PANEL	HVAC	HEATING, VENTILATING & AIR CONDITIONING
AFG	ABOVE FINISHED GRADE	IC	INTERRUPTING CAPACITY
AIT	ANALYTICAL INSTRUMENT TRANSMITTER	I & C	INSTRUMENTATION AND CONTROL
AE	ANALYTICAL ELEMENT	IP	INSTRUMENT PANEL (PANELBOARD)
BC	BARE COPPER	J, J–BOX	JUNCTION BOX
BTC	BARE TINNED COPPER	LC	LIGHTING CONTACTOR
C	CONDUIT, CONTACTOR	LR	LOCAL/REMOTE
CB	CIRCUIT BREAKER	LS	LIMIT SWITCH
CKT	CIRCUIT	LT/TT/CT	LEVEL/TEMPERATURE/ CONDUCTIVITY
COND	CONDUCTIVITY	M	MAGNETIC CONTACTOR COIL OR MOTOR
CPT	CONTROL POWER TRANSFORMER	MCC	MOTOR CONTROL CENTER
CR	CONTROL RELAY	MCP	MOTOR CIRCUIT PROTECTOR
CT	CURRENT TRANSFORMER	MDP	MAIN DISTRIBUTION PANEL
ETM	ELAPSED TIME METER	MH	MOTOR HEATER, MANHOLE
EXST	EXISTING	MLO	MAIN LUGS ONLY
F, FU	FUSE	MPZ	MINI POWER ZONE
FI	FLOW INDICATOR	MSC	MANUFACTURER SUPPLIED CABLE
FM	FLOW METER	MTD	MOTOR TEMPERATURE DETECTOR
FPL	FLORIDA POWER & LIGHT	N	NEUTRAL
FT	FLOW TRANSMITTER	NC	NORMALLY CLOSED
FVNR	FULL VOLTAGE NON–REVERSING STARTER	NEC	NATIONAL ELECTRIC CODE
	GREEN, GROUND	NEMA	NATIONAL ELECTRIC MANUFACTURER'S ASSOCIATION
GALV	GALVANIZED	NO	NORMALLY OPEN
GEN	GENERATOR	NTS	NOT TO SCALE
GFI	GROUND FAULT INTERRUPTER	OL	OVERLOAD RELAY
GND	GROUND		
HH	HANDHOLE		
HOA	HAND/OFF/AUTO		
HOR	HAND/OFF/REMOTE		

ABBREVIATIONS

ABBREVIATIONS	DESCRIPTION	ABBREVIATIONS	DESCRIPTION
PB	PULL BOX	SS	316 STAINLESS STEEL
PCM	EXISTING PLANT CONTROL PANEL	SV	SOLENOID VALVE
PDB	POWER DISTRIBUTION BLOCK	SW	SWITCH
PH	PHASE MONITOR	T	THERMOSTAT
PM	POWER MONITOR	TB	TERMINAL BOARD
PNL	PANEL	TEMP	TEMPERATURE
PP	POWER PANEL (480VAC)	TJB	TERMINAL JUNCTION BOX
PS	PRESSURE SWITCH	TSP	TWISTED SHIELDED PAIR
PVC	POLYVINYL CHLORIDE CONDUIT	TVSS	TRANSIENT VOLTAGE SURGE SUPPRESSION
RTU	REMOTE TELEMETRY UNIT	TYP	TYPICAL
RGS	RIGID GALVANIZED STEEL	V	VOLTMETER, VOLT
SF	SUPPLY FAN	VD	VOLTAGE DROP
SH	SPACE HEATER	VFD	VARIABLE FREQUENCY DRIVE
SSRVS	SOLID STATE REDUCED VOLTAGE STARTER	WP	WEATHERPROOF – NEMA 4X
		XFMR	TRANSFORMER

GENERAL NOTES:

1. THE SCOPE OF WORK IS DESCRIBED IN SPECIFICATIONS AND DRAWINGS.
2. THE CONTRACTOR SHALL PROVIDE ALL MATERIALS AND LABOR TO INSTALL THE ELECTRICAL SYSTEMS AS INDICATED PER PLANS AND SPECIFICATIONS. ITEMS NOT SHOWN BUT NECESSARY FOR COMPLETION OF THE WORK SHALL BE INCLUDED.
3. THE INSTALLATION SHALL BE IN ACCORDANCE WITH THE NATIONAL ELECTRICAL CODE, NATIONAL ELECTRICAL SAFETY CODE, LOCAL CODES, CITY CODES AND FLORIDA BUILDING CODES WITH AMENDMENTS.
4. THE CONTRACTOR SHALL, BEFORE SUBMITTING HIS BID, VISIT THE SITE OF THE PROJECT AND BECOME FAMILIAR WITH THE EXISTING CONDITIONS. NO ALLOWANCE WILL BE MADE FOR EXISTING CONDITIONS OR FAILURE OF THE CONTRACTOR TO OBSERVE THEM.
5. IT IS THE CONTRACTOR'S RESPONSIBILITY TO COORDINATE WITH ALL LOCAL UTILITIES, INCLUDING THE POWER UTILITY TO MEET ALL OF THEIR INSTALLATION REQUIREMENTS. ALL FEES, LABOR, EQUIPMENT OR MATERIALS NECESSARY TO MEET THESE REQUIREMENTS IS TO BE INCLUDED IN THE BID.
   FPL REPRESENTATIVE: JESSAN JACQUET, PHONE: 954–717–2134, EMAIL: JESSAN.JACQUET@FPL.COM
6. ALL CONTRACTOR EQUIPMENT AND MATERIAL SHALL BE NEW, UNUSED AND U.L. LISTED.
7. THE CONTRACTOR IS RESPONSIBLE TO TEST ALL SYSTEMS INSTALLED OR MODIFIED UNDER THIS PROJECT AND REPAIR OR REPLACE ALL DEFECTIVE WORK TO THE SATISFACTION OF THE ENGINEER AND OWNER.
8. COORDINATE ALL ELECTRICAL EQUIPMENT LOCATIONS AND VERIFY ALL OBSTRUCTIONS WITH ALL SUBCONTRACTORS AND EQUIPMENT SUPPLIERS PRIOR TO ANY INSTALLATION.
9. CONTRACTOR SHALL LOCATE ALL EXISTING UNDERGROUND UTILITIES BEFORE ANY DIGGING.
10. MINIMUM DEPTH FROM TOP OF DUCTBANKS OR CONDUITS TO FINISHED GRADE SHALL BE 24".
11. ALL EXCAVATIONS FOR CONDUITS AND HANDHOLES, NEAR EXISTING PIPING, CONDUIT AND EQUIPMENT SHALL BE HAND EXCAVATED AND COORDINATED WITH PLANT ENGINEER.
12. CONDUCTOR PULLING TENSIONS SHALL NOT EXCEED MANUFACTURER'S RECOMMENDATION. CONTRACTOR SHALL INSTALL PULL BOXES TO MEET MANUFACTURER'S REQUIREMENTS.
13. ALL CONDUCTORS SHALL BE 600V, U.L. LISTED. POWER CABLES SHALL BE TYPE THHN/THWN EXCEPT FOR SIZES NO. 6 AND LARGER USE XHHW INSULATION. INSTRUMENTATION CABLE SHALL BE TYPE B, #16 TWISTED SHIELDED CABLE. ALL CONDUCTING MEDIA SHALL BE COPPER. NO ALUMINUM ALLOWED.
14. EXPOSED CONDUIT SHALL BE RIGID ALUMINUM, UNDERGROUND CONDUIT SHALL BE SCHEDULE 40 PVC UNLESS OTHERWISE NOTED. TRANSITION FROM UNDERGROUND TO EXPOSED CONDUIT SHALL BE RIGID ALUMINUM. TRANSITION SHALL BE IN UNDERGROUND. APPLY TWO COATS OF BITUMASTIC PAINT TO ALL ALUMINUM CONDUITS WHERE CONTACT WITH CONCRETE FLOOR SLABS.
15. FLEXIBLE CONDUITS SHALL BE USED TO TERMINATE ALL MOTORS AND OTHER VIBRATING EQUIPMENT AND SHALL BE BETWEEN 18" AND 3' IN LENGTH.
16. CONTRACTOR SHALL RESTORE SIDEWALKS, ROADWAYS, SOD AND SPRINKLER SYSTEM PIPING TO MATCH EXISTING, AFTER THE COMPLETION OF THE CONDUIT AND PULLBOX INSTALLATION.
17. ALL MATERIAL IN DESIGNATED CORROSIVE AREAS SHALL BE NEMA 4X 316 STAINLESS STEEL OR NON–METALLIC.
18. ALL CONTROL PANELS SHALL BE CONSTRUCTED BY A UL 508A APPROVED PANEL VENDOR AND SHALL BEAR A UL 508A LABEL ON THE PANEL.
19. PROVIDE ENOUGH WORKING CLEARANCE PER NEC IN FRONT OF ALL ELECTRICAL PANELS. MAINTAIN MINIMUM 42" CLEARANCE IN FRONT OF ATS PANELS.
20. CONTRACTOR SHALL BE RESPONSIBLE FOR ALL ADDITIONAL CONDUIT AND WIRING AND INSTALLATION FOR ALL VENDOR PROVIDED EQUIPMENT (PACKAGE SYSTEMS) WITHOUT ANY ADDITIONAL COST TO THE OWNER. ADJUST ALL BREAKERS IN MCC'S AND PANELBOARDS ACCORDINGLY WITHOUT ANY ADDITIONAL COST.
21. MINIMUM DISTANCE ALLOWED BETWEEN POWER CONDUITS AND INSTRUMENTATION/GENERATOR REMOTE ANNUNCIATOR CONDUITS SHALL BE:

VOLTAGE	DISTANCE
480V	2 FT
120V	1 FT

22. ALL ELECTRICAL PANELS SHALL BE MOUNTED ABOVE THE REQUIRED FLOOD ELEVATION. CONTRACTOR SHALL COORDINATE WITH THE BUILDING DEPARTMENT AND THE LATEST FEMA MAP.

ENGINEER: Paul F. Hillers
REG. No: 41022
DATE: 02/02/24
TEL: (561) 451-9165
FAX: N/A

DRAWN BY: TN | DATE: 2/8/2024
DESIGNED BY: PFH | SCALE: AS NOTED
CHECKED BY: JD | FIELD BOOK:

CITY OF FORT LAUDERDALE
PUBLIC WORKS DEPARTMENT
ENGINEERING & ARCHITECTURE
100 North Andrews Avenue, Fort Lauderdale, Florida 33301

REVISIONS

NO.	DATE	BY	CHK'D	DESCRIPTION
1	8/25/2021	PFH		FTL BLDG DEPT COMMENTS

PROJECT # P12478
STORMSTATION 1
FIXED EMERGENCY GENERATOR

ELECTRICAL LEGEND & GENERAL NOTES

SHEET NO. E-01
TOTAL:
CAD FILE: E-01
DRAWING FILE NO. 4-144-22

E:\PROJECTS\CA\CA98\DRAWINGS\SS1\SS1 DRAWINGS\E-01.DWG

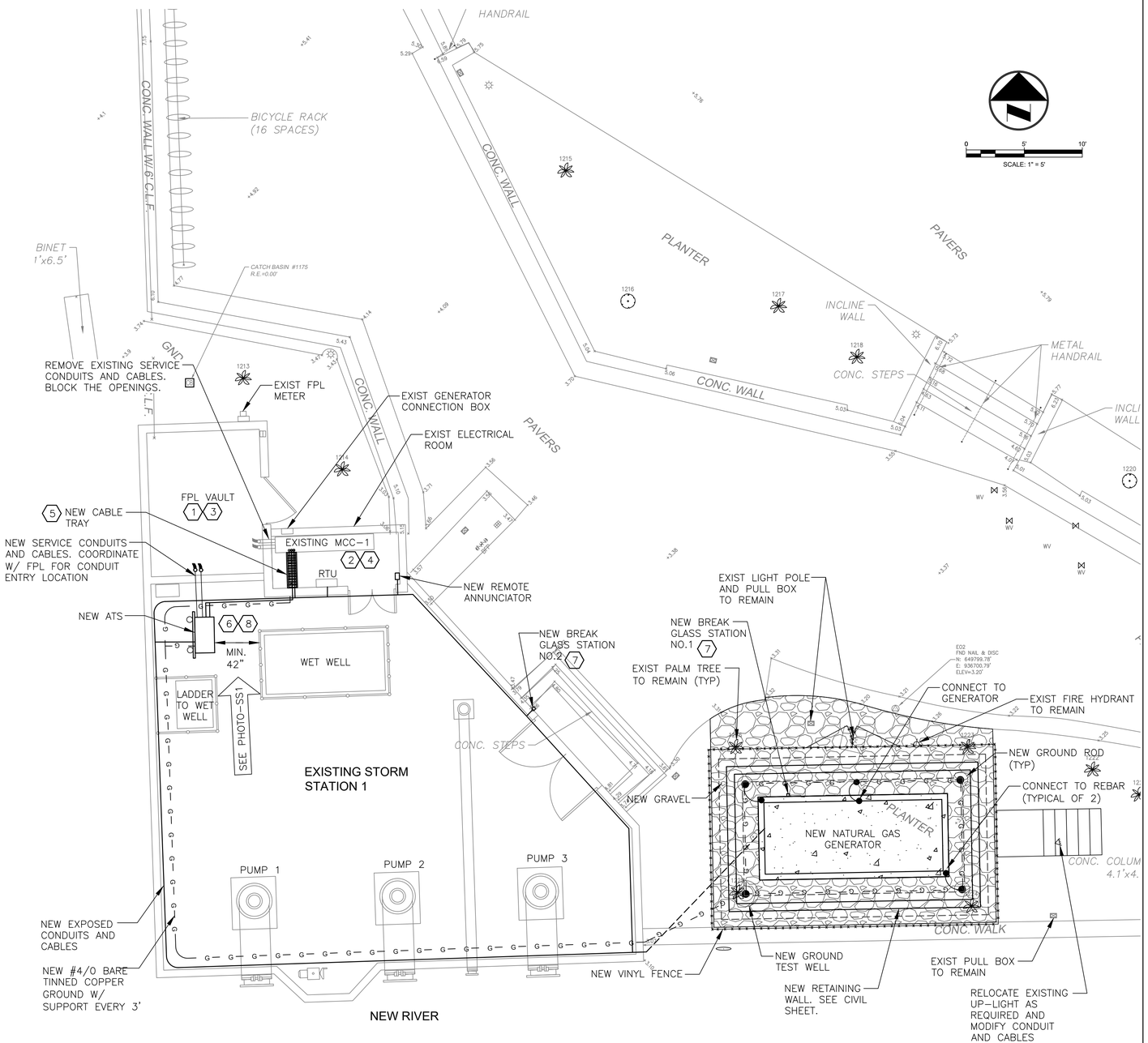

STORM STATION 1 - PROPOSED ELECTRICAL PLAN

SCALE: 1" = 5'

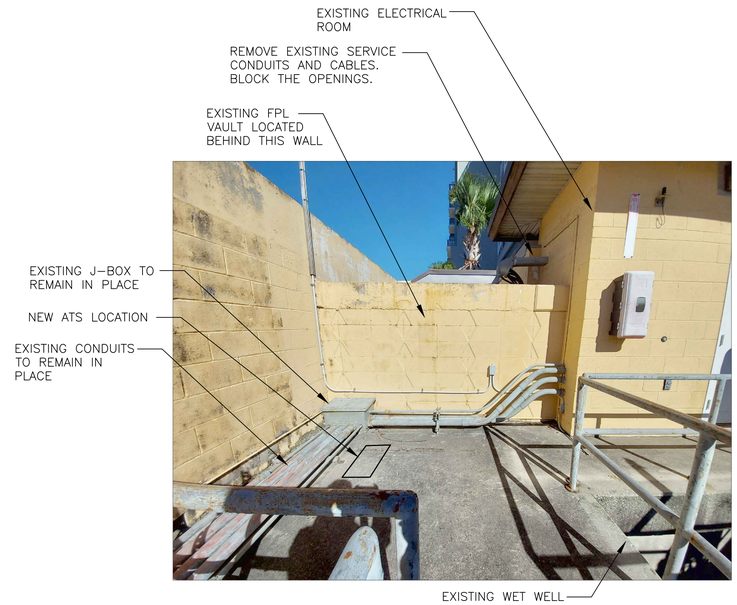

PHOTO-SS1: EXISTING STORM STATION 1

NOT TO SCALE

KEYED NOTES:

1. CONTRACTOR SHALL COORDINATE WITH FPL FOR ELECTRICAL SERVICE DISCONNECT AND DE-ENERGIZE THE TRANSFORMER VAULT.
2. STORM STATION SHALL BE IN SERVICE AT ALL TIME. PROVIDE TEMPORARY POWER (250KW DIESEL GENERATOR WITH SOUND ATTENUATED ENCLOSURE) AND NECESSARY CABLES AND CONNECTORS INCLUDING FUEL DURING ELECTRICAL SERVICE MODIFICATION.
3. CONTRACTOR SHALL COORDINATE WITH FPL FOR ELECTRICAL SERVICE RECONNECT. COORDINATE NEW SERVICE CONDUIT ENTRY LOCATION TO THE EXISTING FPL VAULT.
4. CONTRACTOR SHALL PROVIDE A NEW BREAKER BUCKET WITH SURGE PROTECTIVE DEVICE (SPD) IN THE EXISTING WESTINGHOUSE POWER MASTER MCC. A NEW BREAKER BUCKET SHALL FIT IN 12" AVAILABLE SPACE.
5. CONTRACTOR SHALL PROVIDE A NEW ALUMINUM LADDER TYPE CABLE TRAY FOR MAIN FEEDER CABLES INSIDE THE ELECTRICAL ROOM. FIELD DETERMINE THE CABLE TRAY ROUTING AND CONDUIT ENTRY LOCATION INSIDE THE BUILDING TO AVOID STRUCTURE BEAM. MINIMUM CABLE TRAY SIZE 9" WIDE BY 4" HIGH. SEE DETAILS ON DRAWING E-07 FOR CABLE TRAY DETAILS. PROVIDE ALL NECESSARY GROUNDING, CONDUIT FITTINGS, NIPPLES AND LB CONDULETS, ETC..
6. CONTRACTOR SHALL INSTALL NEW ATS, GENERATOR, CONDUITS AND CABLES PRIOR TO DEMOLITION OF THE EXISTING SERVICE CABLES. SWITCHOVER SHALL NOT BE MORE THAN 3 WORKING DAYS. CONTRACTOR SHALL COORDINATE WITH THE OWNER AND GET APPROVAL.
7. NEW BREAK GLASS STATIONS SHALL BE OUTDOOR RATED WITH MULTIPLE ISOLATED CONTACTS. PROVIDE WEATHER RESISTANT SIGNAGE NEXT TO THE BREAK GLASS STATION INDICATING THAT "STORM STATION IS EQUIPPED WITH A STANDBY GENERATOR. BREAK GLASS AND PUSH TO SHUT DOWN BOTH UTILITY POWER AND GENERATOR POWER".
8. CONTRACTOR SHALL PROVIDE LEGALLY REQUIRED SIGNS FOR STANDBY SYSTEMS AS PER NEC 701.7(A), AT THE SERVICE ENTRANCE EQUIPMENT INDICATING TYPE AND LOCATION OF THE GENERATOR.

NOTES:

1. CONDUIT ROUTING IS SHOWN FOR ILLUSTRATION PURPOSE. CONTRACTOR SHALL FIELD DETERMINE. NEW CONDUITS SHALL ROUTE ON THE WALL OR ON THE FLOOR NEXT TO THE EXISTING EXPOSED CONDUITS.
2. MAINTAIN MINIMUM OF 42" CLEARANCE IN FRONT OF ATS PANEL.
3. CORE DRILL EXISTING CONCRETE WALL FOR NEW CONDUIT INSTALLATION AND REPAIR TO MATCH EXISTING.
4. SEE GENERAL NOTE 21 ON DRAWING E-01 FOR CONDUIT SEPARATION BETWEEN POWER AND INSTRUMENTATION/GENERATOR REMOTE ANNUNCIATOR.
5. CONTRACTOR SHALL LOCATE THE EXISTING GROUNDING SYSTEM AND CONNECT WITH THE NEW ONE.

STORMSTATION 1 ADDRESS: 300 SW 1ST AVE, FORT LAUDERDALE, FL 33301

E:\PROJECTS\CA\CA98\DRAWINGS\SS1\SS1 DRAWINGS\E-02.DWG

ENGINEER: Paul F. Hillers
REG. No: 41022
DATE: 02/02/24
TEL: (561) 451-9165
FAX: N/A

DRAWN BY:	DATE:	DESIGNED BY:	SCALE:	CHECKED BY:	FIELD BOOK:
TN	2/8/2024	PFH	AS NOTED	JD	

CITY OF FORT LAUDERDALE
PUBLIC WORKS DEPARTMENT
ENGINEERING & ARCHITECTURE
100 North Andrews Avenue, Fort Lauderdale, Florida 33301

REVISIONS

NO.	DATE	BY	CHK'D	DESCRIPTION
1	8/25/2021	PFH		FTL BLDG DEPT COMMENTS

PROJECT # P12478
STORMSTATION 1
FIXED EMERGENCY GENERATOR
PROPOSED ELECTRICAL SITE PLAN

SHEET NO. E-02
TOTAL:
CAD FILE: E-02
DRAWING FILE NO. 4-144-22

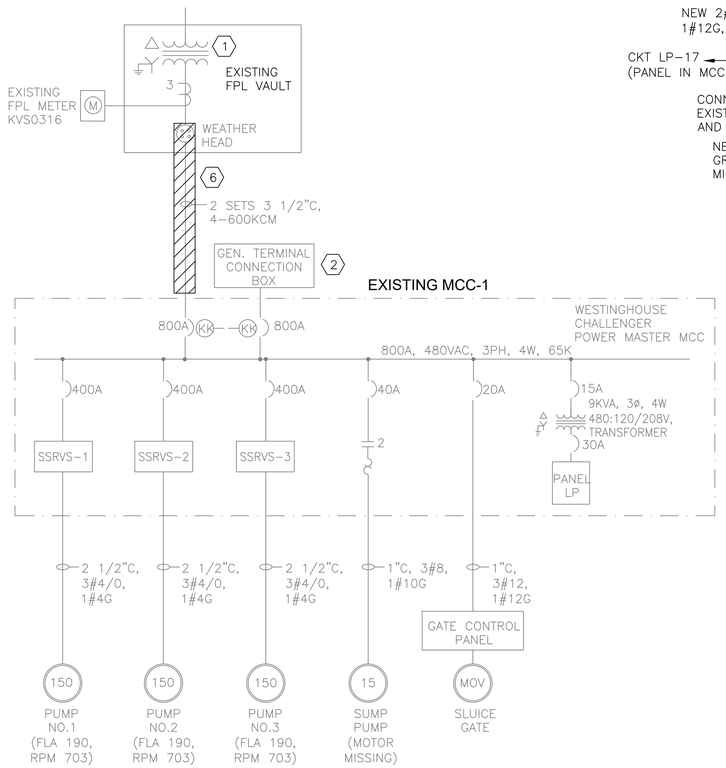

STORM STATION 1 ELECTRICAL ONE LINE - DEMOLITION

NOT TO SCALE

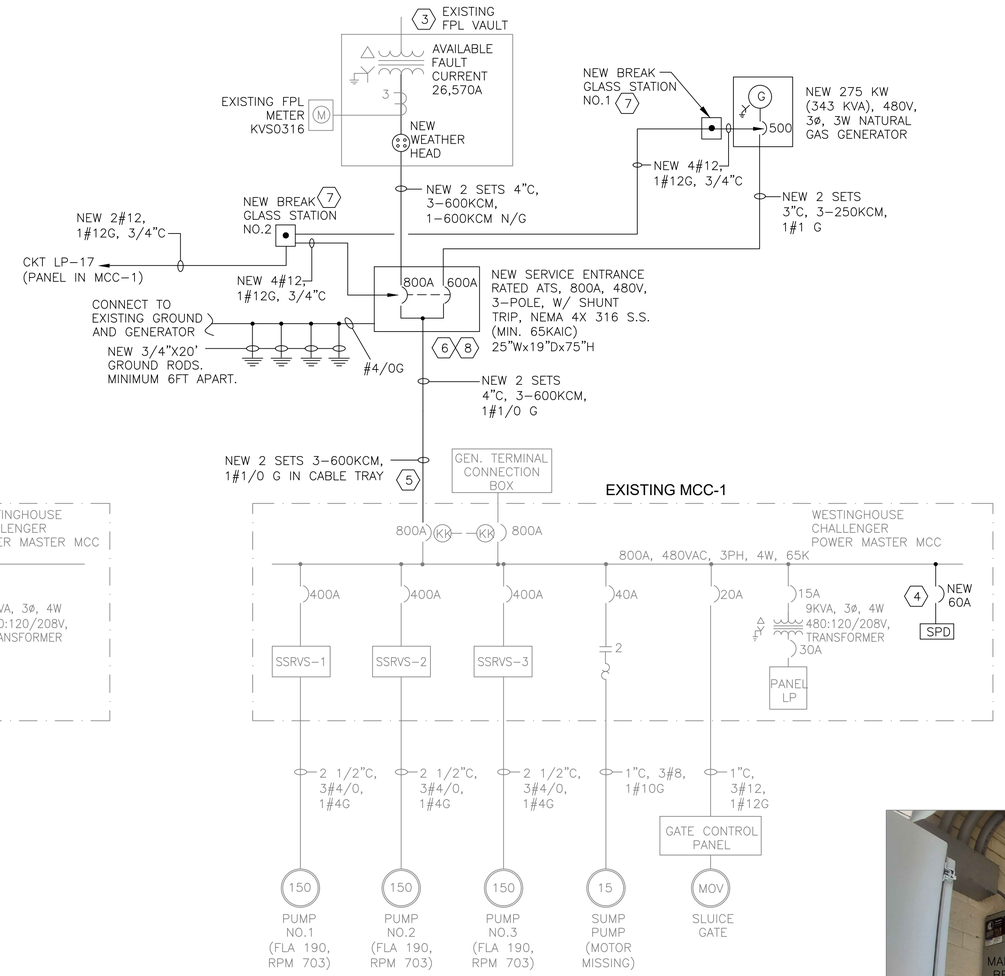

STORM STATION 1 ELECTRICAL ONE LINE - PROPOSED

NOT TO SCALE

KEYED NOTES:

1. CONTRACTOR SHALL COORDINATE WITH FPL FOR ELECTRICAL SERVICE DISCONNECT AND DE-ENERGIZE THE TRANSFORMER VAULT.
2. STORM STATION SHALL BE IN SERVICE AT ALL TIME. PROVIDE TEMPORARY POWER (250KW DIESEL GENERATOR WITH SOUND ATTENUATED ENCLOSURE) AND NECESSARY CABLES AND CONNECTORS INCLUDING FUEL DURING ELECTRICAL SERVICE MODIFICATION.
3. CONTRACTOR SHALL COORDINATE WITH FPL FOR ELECTRICAL SERVICE RECONNECT. COORDINATE NEW SERVICE CONDUIT ENTRY LOCATION TO THE EXISTING FPL VAULT.
4. CONTRACTOR SHALL PROVIDE A NEW BREAKER BUCKET WITH SURGE PROTECTIVE DEVICE (SPD) IN THE EXISTING WESTINGHOUSE POWER MASTER MCC. A NEW BREAKER BUCKET SHALL FIT IN 12" AVAILABLE SPACE.
5. CONTRACTOR SHALL PROVIDE A NEW ALUMINUM LADDER TYPE CABLE TRAY FOR MAIN FEEDER CABLES INSIDE THE ELECTRICAL ROOM. FIELD DETERMINE THE CABLE TRAY ROUTING AND CONDUIT ENTRY LOCATION INSIDE THE BUILDING TO AVOID STRUCTURE BEAM. MINIMUM CABLE TRAY SIZE 9" WIDE BY 4" HIGH. SEE DETAILS ON DRAWING E-07 FOR CABLE TRAY DETAILS. PROVIDE ALL NECESSARY GROUNDING, CONDUIT FITTINGS, NIPPLES AND LB CONDULETS, ETC..
6. CONTRACTOR SHALL INSTALL NEW ATS, GENERATOR, CONDUITS AND CABLES PRIOR TO DEMOLITION OF THE EXISTING SERVICE CABLES. SWITCHOVER SHALL NOT BE MORE THAN 3 WORKING DAYS. CONTRACTOR SHALL COORDINATE WITH THE OWNER AND GET APPROVAL.
7. NEW BREAK GLASS STATIONS SHALL BE OUTDOOR RATED WITH MULTIPLE ISOLATED CONTACTS. PROVIDE WEATHER RESISTANT SIGNAGE NEXT TO THE BREAK GLASS STATION INDICATING THAT "STORM STATION IS EQUIPPED WITH A STANDBY GENERATOR. BREAK GLASS AND PUSH TO SHUT DOWN BOTH UTILITY POWER AND GENERATOR POWER".
8. CONTRACTOR SHALL PROVIDE LEGALLY REQUIRED SIGNS FOR STANDBY SYSTEMS AS PER NEC 701.7(A), AT THE SERVICE ENTRANCE EQUIPMENT INDICATING TYPE AND LOCATION OF THE GENERATOR.

SERVICE CALCULATION @ 480V, 3-PHASE

	CONNECTED	NORMAL POWER RUNNING	GENERATOR POWER RUNNING
PUMP 1	190.0 A	161.5 A	161.5 A
PUMP 2	190.0 A	161.5 A	0.0 A
PUMP 3	190.0 A	0.0 A	0.0 A
SUMP PUMP	21.0 A	0.0 A	0.0 A
SLUICE GATE	7.0 A	0.0 A	0.0 A
XFMR / PANEL LP	10.8 A	9.2 A	9.2 A
25% OF LARGEST MOTOR	47.5 A	0.0 A	0.0 A
TOTAL LOADS (AMPS)	656.3 A	332.2 A	170.7 A
TOTAL LOADS (KVA)	545.7 KVA	276.2 KVA	142.0 KVA

EXISTING MCC-1 ELEVATION VIEW

NOT TO SCALE

ENGINEER: Paul F. Hillers
REG. No: 41022
DATE: 02/02/24
TEL: (561) 451-9165
FAX: N/A

DRAWN BY: TN | DATE: 2/8/2024
DESIGNED BY: PFH | SCALE: AS NOTED
CHECKED BY: JD | FIELD BOOK:

CITY OF FORT LAUDERDALE
PUBLIC WORKS DEPARTMENT
ENGINEERING & ARCHITECTURE
100 North Andrews Avenue, Fort Lauderdale, Florida 33301

REVISIONS

NO.	DATE	BY	CHK'D	DESCRIPTION
1	8/25/2021	PFH		FTL BLDG DEPT COMMENTS

PROJECT # P12478
STORMSTATION 1
FIXED EMERGENCY GENERATOR
ELECTRICAL ONE LINE DIAGRAM

SHEET NO. E-03
TOTAL:
CAD FILE: E-03
DRAWING FILE NO. 4-144-22

E:\PROJECTS\CA\CA98\DRAWINGS\SS1\SS1 DRAWINGS\E-03.DWG

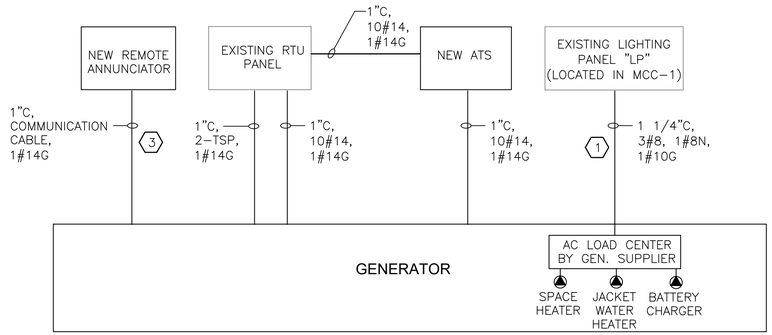

GENERATOR RISER DIAGRAM

NOT TO SCALE

STORM STATION 1 EXISTING LIGHTING PANEL "LP" SCHEDULE

BUS AMPS A	BUS AMPS B	BUS AMPS C	LOAD	POLES	AMPS	BUS A B C		AMPS	POLES	LOAD	BUS AMPS A	BUS AMPS B	BUS AMPS C
1.0			CONTROL	1	20	1	2	20	1	SPACE	–		
	3.0		PUMP #2 HEATER	1	20	3	4	20	1	SPACE		–	
		3.0	INSIDE GFI	1	20	5	6	20	1	CONTROL			1.0
0.5			EMERG LIGHT	1	20	7	8	30	2	AIR CONDITIONER	6.7		
	3.0		LIGHTS	1	20	9	10					6.7	
		–	SPARE	1	20	11	12	20	1	AIR COMPRESSOR (NOT USED)			–
–			SPARE	1	20	13	14	20	1	HOIST	–		
	–		SPARE	1	20	15	16	20	1	SPARE		–	
		0.5	BREAK GLASS STATION	1	20	17	18	20	1	ALARM CIRCUIT			1.0
10.0			GEN. AC LOAD CENTER 1 2	3	30	19	20	20	3	PHASE MONITOR	0.5		
	10.0					21	22					0.5	
		10.0				23	24						0.5

TOTAL AMPS: BUS A 18.7 BUS B 23.2 BUS C 16.0 CONNECTED Kva 6.9

RATED VOLTAGE: ■ 120/208 ☐ 480 3 PHASE, 4 WIRE		BRANCH POLES ☐ 12 ☐ 20 ■ 24 ☐ 42	
RATED AMPS: ■100 ☐ 225 ☐ 400 ☐ _____	CABINET: ■ SURFACE ☐ FLUSH		
NEUTRAL BUS ☐ 100% ■ 150% ☐ 200%	■ GROUND BUS	■ HINGED DOOR ■ KEYED DOOR LATCH	LOCATION: INSIDE MCC-1
■ CIRCUIT BREAKER (BOLT-IN) BRANCH DEVICES	■ TVSS	ENCLOSURE TYPE ■ NEMA 1 ☐ NEMA 3R ☐ NEMA 4X ☐ _____	
■ MAIN LUGS ONLY MAIN ___ AMPS ☐ BREAKER	☐ _____ TO BE GFI BREAKERS		
PANELBOARD MUST BE RATED TO INTERRUPT A SHORT CIRCUIT ISC OF _____10,000 AMPS SYMMETRICAL.			
MF'RS. WESTINGHOUSE, POW-R-LINE, PRL1 TYPE		COPPER BUSSES	MAIN LUGS _____ SETS SIZE: _____

KEYED NOTES:

1. CONTRACTOR SHALL COORDINATE WITH GENERATOR SUPPLIER FOR AC LOAD CENTER POWER REQUIREMENT AND ADJUST THE SIZES OF BREAKERS, CONDUITS AND CABLES ACCORDINGLY. CONTRACTOR SHALL BALANCE THE EXISTING PANEL LOADS AS REQUIRED AND PROVIDE UPDATED PANEL SCHEDULE.
2. CONTRACTOR SHALL PROVIDE NEW BREAKERS IN EXISTING LIGHTING PANEL LP (WESTINGHOUSE PRL1 PANELBOARD) AS SHOWN IN PANEL SCHEDULE.
3. CONTRACTOR SHALL COORDINATE WITH GENERATOR SUPPLIER FOR REMOTE ANNUNCIATOR COMMUNICATION CABLE REQUIREMENT AND PROVIDE ACCORDINGLY.

ENGINEER: Paul F. Hillers
REG. No: 41022
DATE: 02/02/24
TEL: (561) 451-9165
FAX: N/A

DRAWN BY: TN | DATE: 2/8/2024
DESIGNED BY: PFH | SCALE: AS NOTED
CHECKED BY: JD | FIELD BOOK:

CITY OF FORT LAUDERDALE
PUBLIC WORKS DEPARTMENT
ENGINEERING & ARCHITECTURE
100 North Andrews Avenue, Fort Lauderdale, Florida 33301

REVISIONS

NO.	DATE	BY	CHK'D	DESCRIPTION
1	8/25/2021	PFH		FTL BLDG DEPT COMMENTS

PROJECT # P12478
STORMSTATION 1
FIXED EMERGENCY GENERATOR

ELECTRICAL RISER & PANEL SCHEDULE

SHEET NO. E-04
TOTAL:
CAD FILE: E-04
DRAWING FILE NO. 4-144-22

E:\PROJECTS\CA\CA98\DRAWINGS\SS1\SS1 DRAWINGS\E-04.DWG

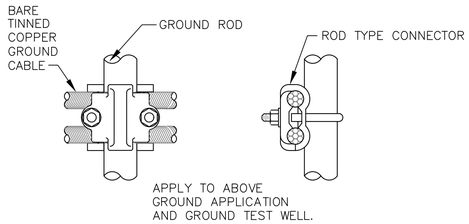

CABLE TO ROD CONNECTION
NOT TO SCALE

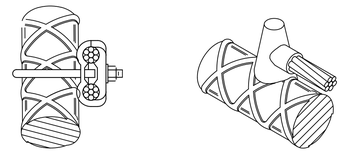

COPPER CONDUCTOR TAP TO HORIZONTAL REINFORCING BAR (REBAR) LOCATED NEAR THE BOTTOM OR VERTICALLY, WITHIN THAT PORTION OF CONCRETE FOUNDATION OR FOOTING. CONDUCTOR SIZE IS #4/0 BTC. MINIMUM DIAMETER OF REBAR IS 1/2". MINIMUM LENGTH OF REBAR IS 20'.

GROUND CABLE TO REBAR CONNECTIONS
NOT TO SCALE

NOTES:
1. THIS DETAIL TYPICAL FOR BOTH VERTICAL AND HORIZONTAL MOUNTING
2. CHANNEL AND ALL SUPPORT DEVICES TO BE 316 STAINLESS STEEL.
3. CHANNELS TO BE SPACED 5' MAXIMUM.

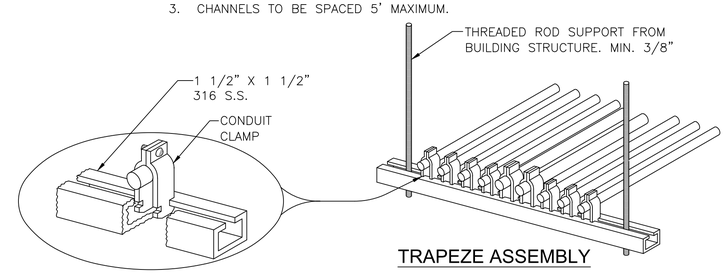

CONDUIT PIPE STRAP MOUNTING DETAILS

TRAPEZE ASSEMBLY

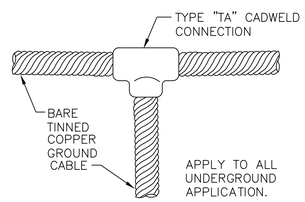

GROUND CABLE CONNECTION
NOT TO SCALE

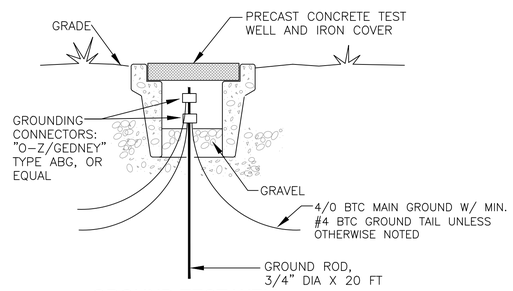

GROUND TEST WELL
NOT TO SCALE

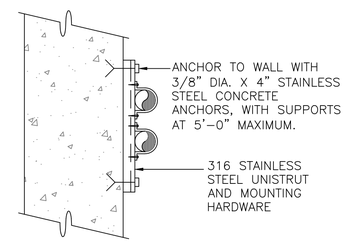

CONDUIT SUPPORT ON WALL
NOT TO SCALE

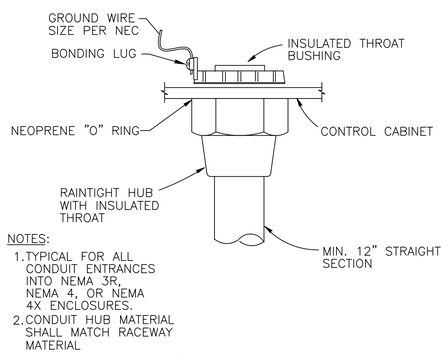

NOTES:
1. TYPICAL FOR ALL CONDUIT ENTRANCES INTO NEMA 3R, NEMA 4, OR NEMA 4X ENCLOSURES.
2. CONDUIT HUB MATERIAL SHALL MATCH RACEWAY MATERIAL

CONDUIT HUB
NOT TO SCALE

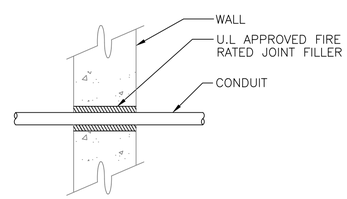

CONDUIT PENETRATION AT WALL
NOT TO SCALE

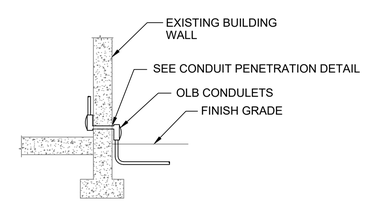

CONDUIT ENTRANCE
NOT TO SCALE

ENGINEER: Paul F. Hillers
REG. No: 41022
DATE: 02/02/24
TEL: (561) 451-9165
FAX: N/A

DRAWN BY: TN | DATE: 2/8/2024
DESIGNED BY: PFH | SCALE: AS NOTED
CHECKED BY: JD | FIELD BOOK:

CITY OF FORT LAUDERDALE
PUBLIC WORKS DEPARTMENT
ENGINEERING & ARCHITECTURE
100 North Andrews Avenue, Fort Lauderdale, Florida 33301

REVISIONS

NO.	DATE	BY	CHK'D	DESCRIPTION
1	8/25/2021	PFH		FTL BLDG DEPT COMMENTS

PROJECT # P12478
STORMSTATION 1
FIXED EMERGENCY GENERATOR
ELECTRICAL DETAILS

SHEET NO. E-05
TOTAL:
CAD FILE: E-05
DRAWING FILE NO. 4-144-22

E:\PROJECTS\CA\CA98\DRAWINGS\SS1\SS1 DRAWINGS\E-05.DWG

NOTE:
1. HEAT SHRINK TUBING SHALL COVER UNDERGROUND CONDUIT ADAPTER

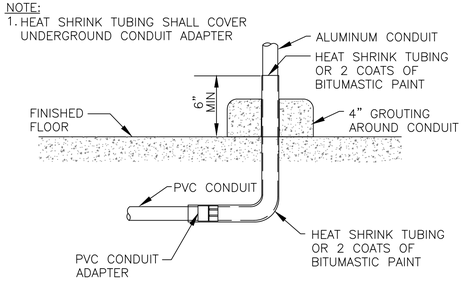

CONDUIT FLOOR ENTRANCE GROUT DETAIL

NOT TO SCALE

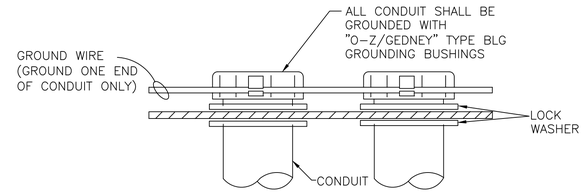

CONDUIT GROUNDING

NOT TO SCALE

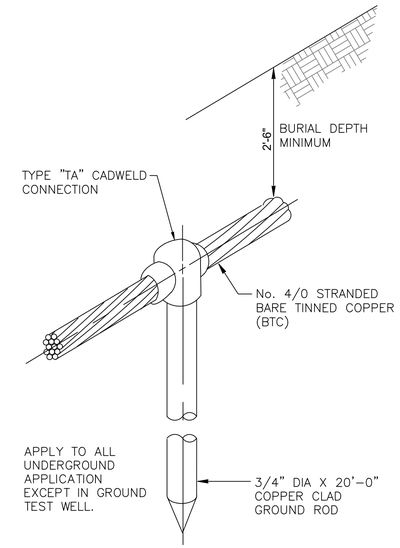

GROUND ROD DETAIL

NOT TO SCALE

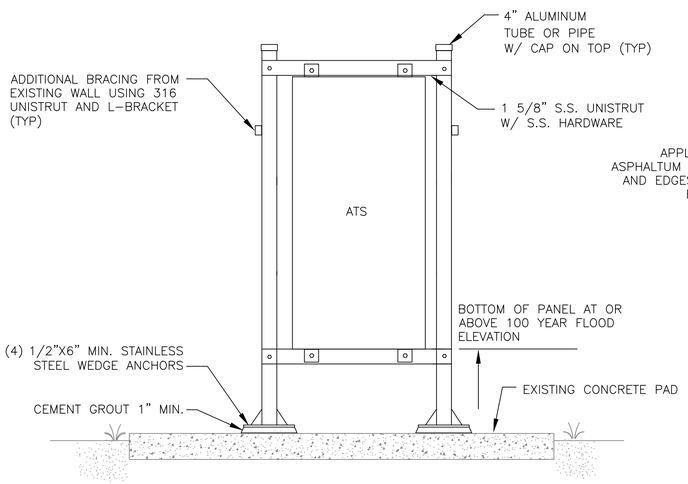

NEW ATS PANEL RACK ON EXISTING CONCRETE SLAB DETAIL

NOT TO SCALE

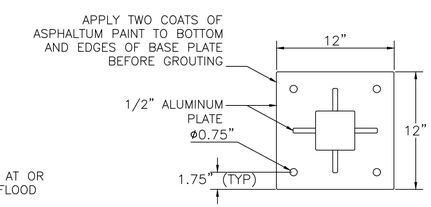

BASE PLATE

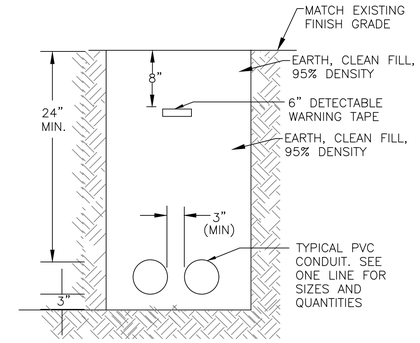

DIRECT BURIED CONDUIT DETAIL

NOT TO SCALE

ENGINEER: Paul F. Hillers
REG. No: 41022
DATE: 02/02/24
TEL: (561) 451-9165
FAX: N/A

DRAWN BY: TN | DATE: 2/8/2024
DESIGNED BY: PFH | SCALE: AS NOTED
CHECKED BY: JD | FIELD BOOK:

CITY OF FORT LAUDERDALE
PUBLIC WORKS DEPARTMENT
ENGINEERING & ARCHITECTURE
100 North Andrews Avenue, Fort Lauderdale, Florida 33301

REVISIONS

NO.	DATE	BY	CHK'D	DESCRIPTION
1	8/25/2021	PFH		FTL BLDG DEPT COMMENTS

PROJECT # P12478
STORMSTATION 1
FIXED EMERGENCY GENERATOR
ELECTRICAL DETAILS

SHEET NO. E-06
TOTAL:
CAD FILE: E-06
DRAWING FILE NO. 4-144-22

E:\PROJECTS\CA\CA98\DRAWINGS\SS1\SS1 DRAWINGS\E-06.DWG

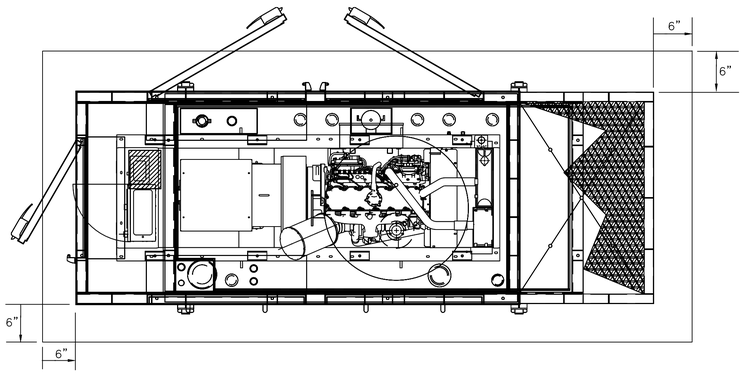

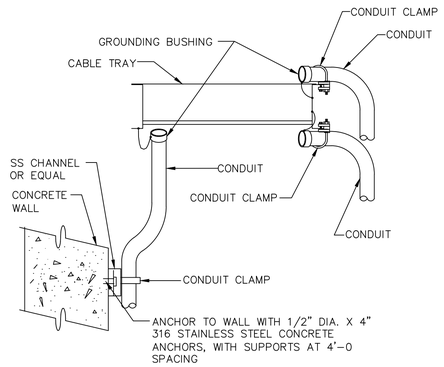

CONDUIT DROP FROM CABLE TRAY

NOT TO SCALE

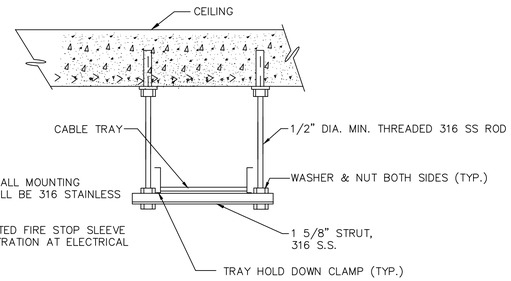

NOTES:

1. UNISTRUT AND ALL MOUNTING HARDWARE SHALL BE 316 STAINLESS STEEL.
2. INSTALL UL LISTED FIRE STOP SLEEVE AT WALL PENETRATION AT ELECTRICAL ROOM.

CABLE TRAY SUPPORT SYSTEM (BEAM MOUNTED)

NOT TO SCALE

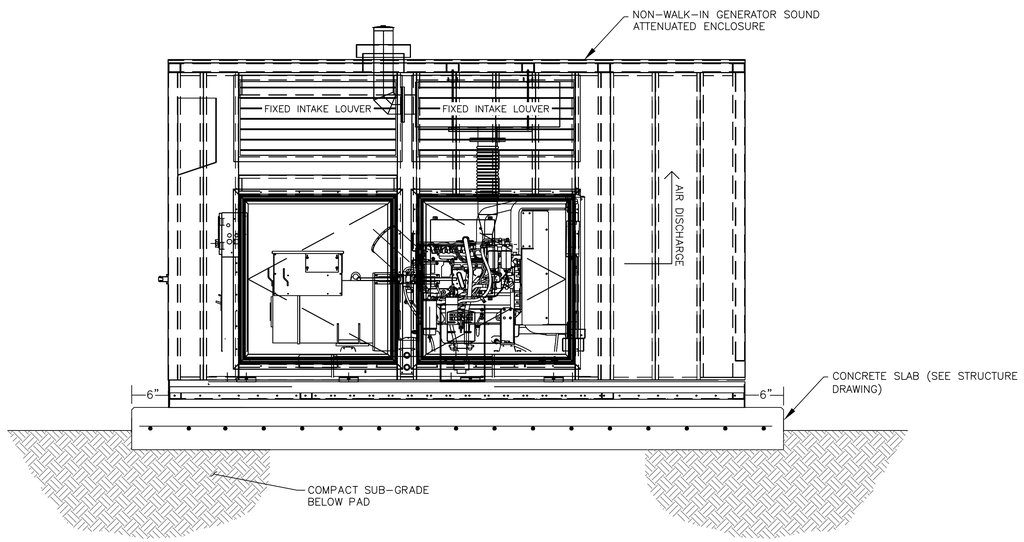

NATURAL GAS GENERATOR DETAIL

NOT TO SCALE

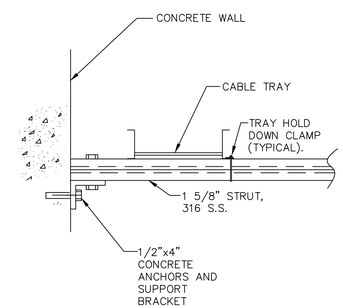

CABLE TRAY SUPPORT SYSTEM (WALL MOUNTED)

NOT TO SCALE

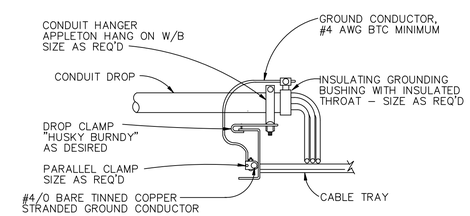

CONDUIT DROP TO CABLE TRAY

NOT TO SCALE

WIND LOADING NOTE:

1. GENERATOR INSTALLATION SHALL MEET FLORIDA BUILDING CODE WIND LOADING REQUIREMENT WITH APPROPRIATE WIND GUST FACTOR FOR THE LOCATION OF INSTALLATION. THE CONTRACTOR SHALL INCLUDE THE SHOP DRAWING SUBMITTAL, A WIND LOADING CALCULATION SIGNED AND SEALED BY A STRUCTURAL ENGINEER REGISTERED IN THE STATE OF FLORIDA SHOWING THAT THE PROPOSED INSTALLATION WILL MEET THE GIVEN WIND LOADING REQUIREMENT. CONTRACTOR SHALL ADJUST THE SIZE OF THE FOUNDATION AT NO ADDITIONAL COST TO MEET THE REQUIRED WINDLOADING.

ENGINEER: Paul F. Hillers
REG. No: 41022
DATE: 02/02/24
TEL: (561) 451-9165
FAX: N/A

DRAWN BY: TN	DATE: 2/8/2024
DESIGNED BY: PFH	SCALE: AS NOTED
CHECKED BY: JD	FIELD BOOK:

CITY OF FORT LAUDERDALE
PUBLIC WORKS DEPARTMENT
ENGINEERING & ARCHITECTURE
100 North Andrews Avenue, Fort Lauderdale, Florida 33301

REVISIONS

NO.	DATE	BY	CHK'D	DESCRIPTION
1	8/25/2021	PFH		FTL BLDG DEPT COMMENTS

PROJECT # P12478
STORMSTATION 1
FIXED EMERGENCY GENERATOR

ELECTRICAL DETAILS

SHEET NO. E-07

TOTAL:

CAD FILE: E-07

DRAWING FILE NO. 4-144-22

E:\PROJECTS\CA\CA98\DRAWINGS\SS1\SS1 DRAWINGS\E-07.DWG

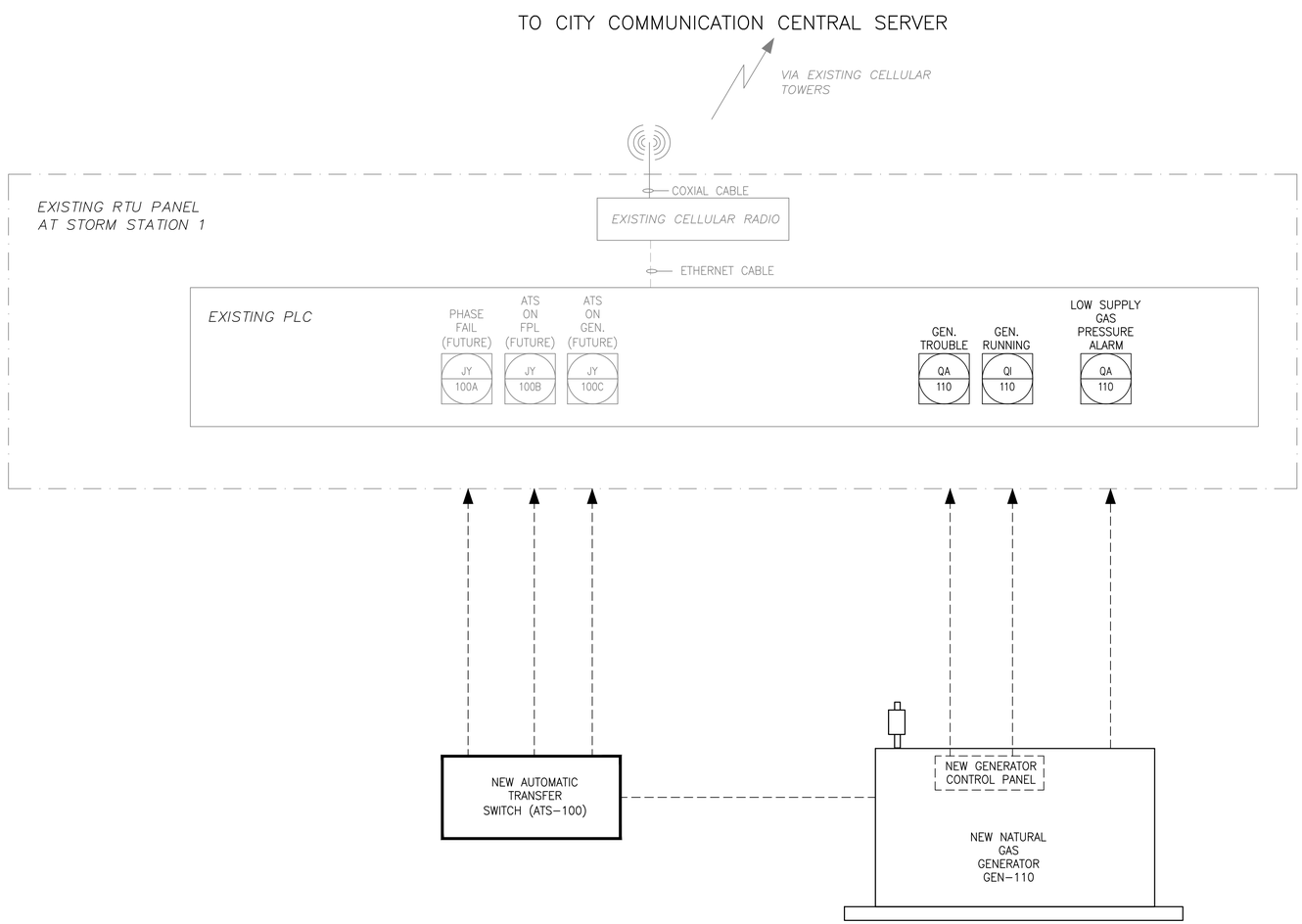

NOTES:

1. CONTRACTOR SHALL COORDINATE WITH THE CITY AND CONNECT AND TEST THE NEW I/O FROM THE GENERATOR ACCORDINGLY.
2. CONNECT GENERATOR TROUBLE, GENERATOR RUNNING AND LOW SUPPLY GAS PRESSURE ALARM TO THE ALLOCATED I/O POINTS IN THE EXISTING RTU PANEL. SIGNALS FROM ATS ARE FOR FUTURE USE.
3. PLC PROGRAMMING AND SCADA PROGRAMMING IS NOT REQUIRED AND IS NOT PART OF THIS CONTRACT.

EXISTING PARTIAL I/O LIST FROM RTU AS-BUILT

EXISTING DISCRETE INPUT EXPANSION CARD 1
IN 12: GENERATOR RUNNING
IN 13: GENERATOR TROUBLE

EXISTING DISCRETE INPUT AND OUTPUT EXPANSION CARD 2
IN 7: LOW SUPPLY GAS PRESSURE ALARM

ENGINEER: Paul F. Hillers
REG. No: 41022
DATE: 02/02/24
TEL: (561) 451-9165
FAX: N/A

DRAWN BY: TN
DATE: 2/8/2024
DESIGNED BY: PFH
SCALE: AS NOTED
CHECKED BY: JD
FIELD BOOK:

CITY OF FORT LAUDERDALE
PUBLIC WORKS DEPARTMENT
ENGINEERING & ARCHITECTURE
100 North Andrews Avenue, Fort Lauderdale, Florida 33301

REVISIONS

NO.	DATE	BY	CHK'D	DESCRIPTION
1	8/25/2021	PFH		FTL BLDG DEPT COMMENTS

PROJECT # P12478
STORMSTATION 1
FIXED EMERGENCY GENERATOR
GENERATOR P&ID

SHEET NO.
E-08
TOTAL:
CAD FILE: E-08
DRAWING FILE NO. 4-144-22

E:\PROJECTS\CA\CA98\DRAWINGS\SS1\SS1 DRAWINGS\E-08.DWG

SECTION 01005

INTENT OF DRAWINGS AND SPECIFICATIONS

PART 1 - GENERAL

1.01 THE REQUIREMENT

A. Intent of specifications and drawings is to cover an installation complete in every respect. It is not intended to give every detail on drawings and in specifications. The City will not be responsible for absence of any detail which the Contractor may require, nor for any special construction which may be found necessary as work progresses. If an item is either indicated or specified, it shall be considered sufficient for inclusion of said item in contract. The Contractor shall furnish and install materials and equipment usually furnished with such systems, and as needed to complete an operating installation, whether mentioned or not, which are customary to its trade.

B. Incidental accessories not usually shown or specified but which are necessary for the proper installation and operation shall be included in work without additional cost to the City, the same as if herein specified.

C. Any apparatus, appliance, material or work not shown on the drawings but mentioned in the specifications, or vice versa, or any incidental accessories necessary to make the work complete and ready for operation, shall be furnished, delivered, and installed by the Contractor without additional cost to the City.

D. The City’s or Engineer's interpretation of drawings and specifications shall be final and binding upon Contractor.

E. The Contractor shall visit site prior to submitting bid, and thoroughly investigate and verify all conditions under which work shall be performed.

PART 2 - PRODUCTS

(NOT USED)

PART 3 - EXECUTION

(NOT USED)

- END OF SECTION -

SECTION 01010

SUMMARY OF WORK

PART 1 - GENERAL

1.01 THE REQUIREMENT

A. The Work to be performed under this Contract shall consist of furnishing and installation of all tools, equipment, materials, supplies, manufactured articles, transportation and services, including fuel, power, water and essential communications for the performance of all labor, work and/or other operations as required for the fulfillment of the Contract in strict accordance with the Contract Documents. The Work shall be complete, and all work, materials, and services not expressly indicated or called for in the Contract Documents, which may be necessary for the complete and proper construction of the Work in good faith, shall be provided by the Contractor as though originally so indicated, at no increase in cost to the City.

B. The Contractor shall perform all work required for such construction in accordance with the Contract Documents and subject to the terms and conditions of the Contract, complete and ready for use.

C. The principal features of the Work to be performed under this Contract include site, civil, mechanical, electrical and all related work associated with the Stormstation 2 Fixed Emergency Generator installation. This work includes installation of helical piles, reinforced concrete foundation slab, generator installation including installation of underground conduits, wiring and connection to the existing stormstation electrical power facilities, natural gas connection to the generator, sidewalk paver replacement, sod and irrigation restoration, tree protection, tree relocation, and related work. Also included in the Contract is all material, labor, and equipment for demolition, disposal, excavation, maintenance of operations during construction, erosion and sedimentation control, removal and disposal of contaminated soils and groundwater, startup and testing of the new facilities, operation and maintenance manuals, record documents, test equipment and all other appurtenant and miscellaneous work required for completion of the work, in accordance with the Contract Documents and not included in other bid items.

1.02 CONTRACT DOCUMENTS

A. The Work to be done is shown on the Drawings entitled City of Fort Lauderdale Stormstation 2 Fixed Emergency Generator. The numbers and titles of all Drawings appear on the index sheets of the Drawings. All drawings so enumerated shall be considered an integral part of the Contract Documents as defined herein.

B. Certain Document Sections refer to Divisions of the Contract Specifications. Sections are each individually numbered portions of the Specifications (numerically) such as 05010, 11100, 15115, etc. The term Division is used as a convenience term meaning all Sections within a numerical grouping. For example, Division 2 would thus include Sections 02000 through 02999 and would mean all site work specifications.

C. Contractor shall note that if there is a conflict between any of the Contract Documents the more stringent requirement shall apply and shall be furnished at no additional cost to the City.

1.03 GENERAL ARRANGEMENT

A. Drawings indicate the extent and general arrangement of the work. If any departures from the Drawings are deemed necessary by the Contractor to accommodate the materials and equipment he proposes to furnish, details of such departures and reasons therefore shall be submitted as soon as practicable to the City for approval. No such departures shall be made without the prior written approval of the City. Approved changes shall be made without additional cost to the City for this work or related work under other Contracts of the Project.

B. The specific equipment proposed for use by the Contractor on the project may require changes in structures, auxiliary equipment, piping, electrical, mechanical, controls or other work to provide a complete satisfactory operating installation. The Contractor shall submit to the City, for approval, all necessary Drawings and details showing such changes to verify conformance with the overall project structural and architectural requirements and overall project operating performance. The Bid Price shall include all costs in connection with the preparation of new drawings and details and all changes to construction work to accommodate the proposed equipment, including increases in the costs of other Contracts.

1.04 CONSTRUCTION PERMITS AND ENCROACHMENTS

A. The Contractor shall obtain, keep current and pay all fees for any necessary construction permits from those authorities, agencies, or municipalities having jurisdiction over land areas, utilities, or structures which are located within the Contract limits and which will be occupied, encountered, used, or temporarily interrupted by the Contractor's operations unless otherwise stated. Record copies of all permits shall be furnished to the Engineer and the City.

B. When construction permits are accompanied by regulations or requirements issued by a particular authority, agency or municipality, it shall be the Contractor's responsibility to familiarize himself and comply with such regulations or requirements as they apply to his operations on this Project.

C. Agencies requiring permits for this project may include, but are not limited to:

1. City of Fort Lauderdale Department of Sustainable Development

2. FDEP, NPDES Permit/Environmental and Erosion Control

1.05 ADDITIONAL ENGINEERING SERVICES

A. In the event that the Engineer is required to provide additional engineering services as a result of substitution of materials or equipment which are not "or equal" by the Contractor, or changes by the Contractor in dimension, weight, power requirements, etc., of the equipment and accessories furnished, or if the Engineer is required to examine and evaluate any changes proposed by the Contractor for the convenience of the Contractor, then the

Engineer's charges in connection with such additional services shall be charged to the Contractor by the City.

B. Structural design shown on the Contract Drawings is based upon typical weights for major items of equipment as indicated on the Contract Drawings and specified. If the equipment furnished differs from that specified in the Contract Documents such that actual weight exceeds the weight of specified equipment, the Contractor shall assume the responsibility for all costs of redesign and for any construction changes required to accommodate the equipment furnished, including the Engineer's expenses in connection therewith, provided that the original weight assumptions were correct.

C. In the event that the Engineer is required to provide additional engineering services as a result of Contractor's errors, omissions, or failure to conform to the requirements of the Contract Documents, or if the Engineer is required to examine and evaluate any changes proposed by the Contractor solely for the convenience of the Contractor, then the Engineer's charges in connection with such additional services shall be charged to the Contractor by the City and shall be deducted from monies due the Contractor.

1.06 ADDITIONAL EXPENSES

A. In the event the Work of this Contract is not completed within the time set forth in the Contract or within the time to which such completion may have been extended in accordance with the Contract Documents, the additional engineering or inspection charges incurred by the City may be charged to the Contractor and deducted from the monies due him. Extra work or supplemental Contract work added to the original Contract, as well as extenuating circumstances beyond the control of the Contractor, will be given due consideration by the City before assessing engineering and inspection charges against the Contractor.

B. Charges for additional City's expenses shall be independent of any liquidated damages assessed in accordance with the Contract.

1.07 TIME OF WORK

A. Unless otherwise specifically permitted, the normal time of work under this Contract is limited to eight (8) hours per day, 40 hours per week, and shall generally be between the hours noted in Article 8.10 of the Contract Documents, Monday through Friday. Work beyond these hours or on City holidays will result in additional expense to the City. Any expenses and/or damages arising from the Contractor's operations beyond the hours and days specified above shall be borne by the Contractor. This provision does not apply to shut down operations required by construction sequencing and constraints to maintain the existing facilities in operation. The Contractor may elect to work beyond these hours or on holidays or weekends provided that all costs incurred by the City for additional engineering shall be borne by the Contractor and approval has been obtained from the City. The City shall deduct the cost of additional engineering costs and overtime from monies due the Contractor.

B. If it shall become imperative to perform work at night, weekends or holidays the City shall be informed in writing a reasonable time in advance of the beginning of such work (minimum of 10 days, except in an emergency situation as determined by the Contractor). Temporary

lighting and all other necessary facilities for performing and inspecting the work shall be provided and maintained by the Contractor.

C. Unless otherwise specifically permitted, all work that would be subject to damage shall be stopped during inclement, stormy weather. Only such work as will not suffer injury to workmanship or materials will be permitted. Contractor shall carefully protect his work against damage or injury from the weather.

1.08 SURVEYS AND LAYOUT

A. All work under this Contract shall be constructed in accordance with the lines and grades shown on the Drawings or as directed by the Engineer. Elevation of existing ground and appurtenances are believed to be reasonably correct but are not guaranteed to be absolute and therefore are presented only as an approximation. Any error or apparent discrepancy in the data shown or omissions of data required for accurately accomplishing the stake out survey shall be referred immediately to the Engineer for interpretation or correction.

B. All survey work for construction control purposes shall be made by the Contractor at his expense. The Contractor shall provide a Florida Licensed Surveyor as Chief of Party, competently qualified employees, all necessary instruments, stakes, and other material to perform the work.

C. Contractor shall establish all baselines for the location of the principal component parts of the work together with a suitable number of bench marks and batter boards adjacent to the work. Based upon the information provided by the Contract Drawings, the Contractor shall develop and make all detail surveys necessary for construction, including slope stakes, batter boards, stakes for all working points, lines and elevations.

D. Contractor shall have the responsibility to carefully preserve the bench marks, reference points and stakes, and in the case of destruction thereof by the Contractor or resulting from his negligence, the Contractor shall be charged with the resulting expense and damage and shall be responsible for any mistakes that may be caused by the unnecessary loss or disturbance of such bench marks, reference points and stakes. Contractor shall provide a signed and sealed affidavit by his surveyor stating that they have verified all bench marks.

E. Existing or new control points, property markers and monuments that will be or are destroyed during the normal causes of construction shall be reestablished by the Contractor and all reference ties recorded therefore shall be furnished to the Engineer. All computations necessary to establish the exact position of the work shall be made and preserved by the Contractor.

F. The Engineer may check all or any portion of the work and the Contractor shall afford all necessary assistance to the Engineer in carrying out such checks. Any necessary corrections to the work shall be immediately made by the Contractor. Such checking by the Engineer shall not relieve the Contractor of any responsibilities for the accuracy or completeness of his work.

G. At completion of the work, the Contractor shall furnish As-Built Drawings and As-Built GIS Database updates indicating the final layout of all structures, roads, existing benchmarks, etc. The As-Built Drawings and As-Built GIS database updates shall be in accordance with the requirements of Section 01320, Project Record Documents.

1.09 SUBSURFACE DATA

A. Subsurface data are offered in good faith solely for placing the Bidder in receipt of all information available to the City and in no event is to be considered as part of the Contract Documents.

B. The Bidder must interpret such subsurface data according to his own judgment and acknowledge that he is not relying upon the same as accurately describing the subsurface conditions, which may be found to exist.

1. The test boring logs present factual information of the subsurface conditions at the specific test boring location only. The Bidder should not consider, or conclude, that the subsurface conditions will be consistent between test boring locations.

C. In making this data available, the City makes no guarantee, either expressed or implied, as to their accuracy or to the accuracy of any interpretation thereof.

D. Subsurface data for this project can be found in the Appendix.

1.10 OPENINGS, CHASES, SLEEVES, INSERTS, ETC.

A. The Contractor shall provide all openings, chases, etc., in the work to fit his own work and that of any other contractors. All such openings or chases shown on the Drawings, or reasonably implied thereby, or as confirmed or modified by shop, setting, or erecting Drawings approved by the Engineer, shall be provided by the Contractor and/or Subcontractors.

B. Where pipes or conduits are to pass through slabs or walls, or where equipment frames or supports are to be installed as an integral part of an opening, the sleeves, opening forms or frames shall be furnished by the installer of the pipes, conduits, or equipment, but shall be placed by the Subcontractor. Where hanger inserts and similar items are to be installed as an integral part of a slab or wall, they shall be furnished by the installer of the pipe or other equipment requiring the hanger, but shall be verified by the Contractor and incorporated into the concrete placement.

C. When requested by the Contractor, the installer of the pipes, conduit, or equipment, including those Subcontractors who require openings or chases in slabs and walls for passage of ducts, mounting of equipment, etc., shall furnish all necessary information, instructions, and materials to effect accurate installation of the required openings, chases, sleeves, frames, inserts, etc. When such items are secured in position, and just prior to construction of the surrounding slab or wall, the Subcontractor for whom the items are installed shall ascertain the proper number, locations, and settings thereof; and the Contractor shall schedule his operations so as to provide a reasonable opportunity and time interval for such inspection.

D. Any costs resulting from correction of defective, ill-timed, or mislocated work, or for subsequent work which becomes necessary because of omitted openings, chases, sleeves, frames, inserts, etc., shall be borne by the Contractor responsible therefor. To this end, no Contractor shall arbitrarily cut, drill, alter, damage, or otherwise endanger the work of another Contractor. The nature and extent of any corrective or additional work shall be subject to the approval of the Engineer following consultation with the Contractors involved.

1.11 FIRE PROTECTION

A. Contractor shall take all necessary precautions to prevent fires at or adjacent to the work, buildings, etc., and shall provide adequate facilities for extinguishing fires which do occur. Fires shall not be permitted.

B. When fire or explosion hazards are created in the vicinity of the work as a result of the locations of fuel tanks, or similar hazardous utilities or devices, the Contractor shall immediately alert the local Fire Marshal and the City of such tank or device. The Contractor shall exercise all safety precautions and shall comply with all instructions issued by the Fire Marshal and shall cooperate with the City to prevent the occurrence of fire or explosion.

1.12 FIRST AID FACILITIES AND ACCIDENTS

A. First Aid Facilities

1. The Contractor shall provide at the site such equipment and facilities as are necessary to supply first aid to any of his personnel who may be injured in connection with the work.

B. Accidents

1. The Contractor shall promptly report, in writing, to the City all accidents whatsoever out of, or in connection with, the performance of the work, whether on or adjacent to the site, which cause death, personal injury or property damage, giving full details and statements of witnesses.

2. If death, serious injuries, or serious damages are caused, the accident shall be reported immediately by telephone or messenger to both the City and the Engineer.

3. If any claim is made by anyone against the Contractor or a Subcontractor on account of any accidents, the Contractor shall promptly report the facts, in writing, to the City, giving full details of the claim.

1.13 SAFETY AND HEALTH REQUIREMENTS

A. The Contractor shall comply in every respect with all Federal, State and local safety and health regulations. Copies of the Federal Regulations may be obtained from the U.S. Department of Labor, Occupational Safety and Health Administration.

B. The Contractor shall provide all barricades and flashing warning lights or other devices necessary to warn pedestrians and area traffic.

C. Personnel working in contact with sewage flow or surfaces carrying wastewaters or sludges shall be immunized as recommended by the State of Florida Health Department.

1.14 ULTIMATE DISPOSITION OF CLAIMS BY ONE CONTRACTOR ARISING FROM ALLEGED DAMAGE BY ANOTHER CONTRACTOR

A. During the progress of the work, other Contractors may be engaged in performing other work or may be awarded other Contracts for additional work on this project. In that event,

the Contractor shall coordinate the work to be done hereunder with the work of such other Contractors and the Contractor shall fully cooperate with such other Contractors and carefully fit its own work to that provided under other Contracts as may be directed by the City. The Contractor shall not commit or permit any act which will interfere with the performance of work by any other Contractor.

B. If the Engineer determines that the Contractor is failing to coordinate his work with the work of the other Contractors as the City directed, then the City shall have the right to withhold any payments otherwise due hereunder until the Contractor completely complies with the City's directions.

C. If the Contractor notifies the Engineer in writing that another Contractor is failing to coordinate his work with the work of this Contract as directed, the Engineer will promptly investigate the charge. If the Engineer finds it to be true, the City will promptly issue such directions to the other Contractor with respect thereto as the situation may require and issue a response to the Contractor in writing. The City, the Engineer, nor any of their agents shall not, however, be liable for any damages suffered by the Contractor by reason of the other Contractor's failure to promptly comply with the directions so issued by the City, or by reason of another Contractor's default in performance, it being understood that the City does not guarantee the responsibility or continued efficiency of any Contractor.

1.15 LIMITS OF WORK AREA

A. The Contractor shall provide for the storage of equipment, materials, and accumulated construction debris off-site. Responsibility for protection and safekeeping of equipment and materials at or near the sites will be solely that of the Contractor and no claim shall be made against the City by reasons of any act of an employee or trespasser.

B. The Contractor shall secure all storage areas used for the project work. If required, Contractor shall submit a temporary fencing plan and permits for all storage areas used for the project work.

C. The Contractor shall provide a phasing and staging plan that results in minimal impact to the site and nearby residences and provides for continual pedestrian and vehicular access.

1.16 WEATHER CONDITIONS

A. No work shall be done when the weather is unsuitable. The Contractor shall take necessary precautions (in the event of impending severe weather, including hurricanes, tropical storms or major rain/wind storms) to protect all work, materials, or equipment from damage or deterioration due to floods, driving rain, and/or wind. The City reserves the right, to order that additional protection measures over and beyond those proposed by the Contractor, be taken to safeguard all components of the Project.

B. The mixing and placing of concrete or pavement courses, the laying of masonry, and installation of sewers and water mains and stormwater pipes shall be stopped during rainstorms, if ordered by the Engineer; and all freshly placed work shall be protected by canvas or other suitable covering in such manner as to prevent running water from coming in contact with it. Sufficient coverings shall be provided and kept ready at hand for this purpose. The limitations and requirements for mixing and placing concrete or laying of masonry, in cold weather shall be as described elsewhere in these Specifications.

1.17 WEATHER DAYS

A. A “Weather Day” is defined as a normal work day during which the Contractor was unable to perform critical path work for a continuous period of more than four (4) hours during that day.

B. The CONTRACTOR shall be required to submit a record of rain delay in accordance with the contract documents and within 48 hours of the occurrence of the event to the ENGINEER and the OWNER.

C. Weather Days must be reported in the Progress Schedule Update Narrative Report and substantiated with the amount of rainfall obtained from the nearest City identified rain gauge and a description of the activity that was interrupted.

1.18 HURRICANE PRECAUTIONS

A. During such periods of time as are designated by the United States Weather Bureau as being a hurricane watch or warning, the Contractor, at no cost to the City, shall take all precautions necessary to secure the Project site in response to all threatened storm events.

B. Compliance with any specific hurricane watch or warning precautions will not constitute additional work.

C. Suspension of the Work caused by an impending or actual storm event will entitle the Contractor to additional Contract Time equivalent to the time lost as a result of the threatened or actual storm event and shall not give rise to a claim for compensable delay.

1. In the event of a threatened storm that does not occur, the Contract Time will be equivalent to the time between United States Weather Bureau notice of a watch or warning and the lifting of same.

2. In the event of an actual storm event, the Contract Time will be equivalent to the time between United States Weather Bureau notice of a watch or warning and the time required to establish safe working conditions.

1.18 USE OF FACILITIES BEFORE COMPLETION

A. The City reserves the right to enter and use any portion of the constructed facilities before final completion of the whole work to be done under this Contract. However, only those portions of the facilities which have been completed to the City's satisfaction may be placed into service. The City will issue only one Certificate of Substantial Completion to the Contractor covering the entire project regardless of when each portion of the facilities is placed into service.

B. It shall be the City's responsibility to prevent premature connections to or use of any portion of the installed facilities by private or public parties, persons or groups of persons, before the City issues his Certificate of Substantial Completion covering that portion of the work to be placed in service.

D. Consistent with the approved progress schedule, the Contractor shall cooperate with the City to accelerate completion of those facilities, or portions thereof, which have been designated for early use by the City.

1.19 UTILITY LOCATIONS

A. As far as possible, all existing utility lines in the project area have been shown on the plans. However, Fort Lauderdale does not guarantee that all lines are shown, or that said lines are in their true location. It shall be the CONTRACTOR's responsibility to identify and locate all underground or overhead utility lines or equipment affected by the project. No additional payment will be made to the CONTRACTOR because of discrepancies in actual and plan location of utilities and damages suffered as a result thereof.

B. The CONTRACTOR shall notify each utility company involved at least thirty (30) days prior to the start of construction to arrange for positive underground location, relocation or support of its utility where that utility may be in conflict with or endangered by the proposed construction. Relocation of water mains or other utilities for the convenience of the CONTRACTOR shall be paid for by the CONTRACTOR. All charges by utility companies for temporary support of its utilities shall be paid for by the CONTRACTOR. All costs of permanent utility relocations to avoid conflict shall be the responsibility of the CONTRACTOR and the utility company involved.

C. The CONTRACTOR shall schedule and coordinate the WORK in such a manner that it is not delayed by the utility companies relocating or supporting their utilities. No compensation will be paid to the CONTRACTOR for any loss of time or delay.

D. All overhead, surface or underground structures and/or utilities encountered are to be carefully protected from damage or displacement. All damage to said structures and/or utilities is to be completely repaired within a reasonable time; needless delay will not be tolerated. The CITY reserves the right to remedy any damage by ordering outside parties to make repairs at the expense of the CONTRACTOR. All repairs made by the CONTRACTOR are to be made to the satisfaction of the utility owner and shall be inspected by a representative of the utility owner and the ENGINEER.

E. The CONTRACTOR should be aware of the Sunshine State One Call Center, which has a free locating service for contractors and excavators:

1. Within forty-eight hours before excavating, dial toll free 811, and a locator will be dispatched to the WORK location. CONTRACTOR shall reasonably notify other utility companies not notified by Sunshine State One Call Center.

F. In the event that during the course of the WORK CONTRACTOR encounters subsurface or concealed conditions or unknown physical conditions of an unusual nature at the Project site which differ materially from those shown on the Contract Documents, which are not marked in the field by locating services or Utility Department, and which differ from those ordinarily encountered and generally recognized as inherent in WORK of the character called for in the Contract Documents, CONTRACTOR, without disturbing the conditions and before performing any WORK affected by such conditions, shall, within twenty-four (24) hours of their discovery, notify CITY and ENGINEER in writing of the existence of the aforesaid conditions. ENGINEER and CITY shall, within two (2) business days after receipt of CONTRACTOR's written notice, investigate the site conditions identified by

CONTRACTOR. Should ENGINEER determine that the conditions of the Project site are not so materially different to justify a change in the terms of the Contract, ENGINEER shall so notify CITY and CONTRACTOR in writing, stating the reasons, and such determination shall be final and binding upon the parties hereto.

G. No request by CONTRACTOR for a change to the Contract Price or Time under this provision shall be allowed if the CONTRACTOR has not given written notice in strict accordance with these provisions, or if it is made after the date certified by the ENGINEER as the date of Substantial Completion.

1.20 ENVIRONMENTAL PROTECTION

A. The CONTRACTOR shall furnish all labor and equipment and perform all WORK required for the prevention of environmental pollution during and as a result of the WORK under this contract. The CONTRACTOR shall be responsible for preparing and complying with the requirements of the National Pollution Prevention Discharge Elimination System (NPDES) and Storm Water Pollution Prevention Plan (SWPPP), including preparation and submittal of the Notice of Intent (NOI) prior to start of construction. For the purpose of this contract environmental pollution is defined as the presence of chemical, physical, or biological elements or agents which adversely affect human health or welfare; unfavorably alter ecological balances of importance to human life, affect other species of importance to man, or degrade the utility of the environment for aesthetic and recreational purposes. The control of environmental pollution requires consideration of air, water, land and involves noise, solid waste management and management of radiant energy and radioactive materials, as well as other pollutants.

B. The CONTRACTOR shall take all steps necessary to protect water quality in the connected waters around the project and shall utilize such additional measures as directed by the ENGINEER. Silt screens, hay bales, turbidity curtains, or other control measures adjacent to outfall construction shall not be removed until the turbidity of the affected waters is equal to or lower than the ambient turbidity of undisturbed segments of adjacent surface waters.

PART 2 - PRODUCTS

(NOT USED)

PART 3 - EXECUTION

(NOT USED)

- END OF SECTION -

SECTION 01025

MEASUREMENT AND PAYMENT

PART 1 – GENERAL

1.01 THE REQUIREMENTS

A. Payment for various items of the Bid Schedule, as further specified herein, shall include all compensation to be received by the CONTRACTOR for furnishing all tools, equipment, supplies, and manufactured articles, and for all labor operations and incidentals appurtenant to the items of WORK being described, as necessary to complete the various items of the WORK all in accordance with requirements of the Contract Documents, including all appurtenances thereto, and including all costs of permits and cost of compliance with the regulations of public agencies having jurisdiction, including Safety and Health Requirements of the Occupational Safety and Health Administration of the U.S. Department of Labor (OSHA). Copies of licenses and regulatory prebid requirements are attached as Exhibits at the end of Volume II of this document. No separate payment will be made for any item that is not specifically set forth in the Bid Schedule, and all costs therefore shall be included in the prices named in the Bid Schedule for the various appurtenance items of WORK.

B. Payment for the various items of the Bid Schedule shall constitute full compensation for CONTRACTOR's superintendent at the job site full-time during construction, for furnishing and installing all pipe and structures complete in place including but not limited to bends, tees, outlets, fittings, blind flanges and specials, including connections to existing pipelines shown on the Drawings; including surveying both horizontal and vertical control for construction of the structures, pipeline and appurtenances; including all earthwork, excavation as shown on the Drawings, removal and disposal of waste, unsuitable and excess material, furnishing and installing pipe bedding material, all backfill and compaction of native material, and dewatering as required; including potholing to verify locations of existing utilities in advance of construction; the restoration of interfering portions of existing service and utility lines that are not included in other bid items and shown on the Drawings, cleanup; and restoration of all improvements incidental to construction for which there are no other bid items; including but not limited to, sprinkler systems, drainage systems, guardrails, landscaping, sod, fences, curbs and gutters, and all other WORK not included in other bid items.

C. Payment shall also include providing the necessary equipment and manpower to pothole and verify depths and locations of existing utilities sufficiently ahead of construction to avoid conflicts with the design alignment and grade of the concrete pad. Conflicts with utilities shown on the Drawings which result from the CONTRACTOR's negligence to pothole sufficiently ahead of construction (a minimum of two days ahead of construction of the concrete pad or as approved by the ENGINEER) shall be resolved by the CONTRACTOR at no additional cost to the CITY. Unmarked utilities damaged during construction will be paid under unit prices in the Bid Form for similar WORK, if and as approved by the ENGINEER.

D. Payment for all bid items shall constitute full compensation for the complete installation of each, bid item including but not limited to excavation, dewatering, piling, reinforced concrete, backfill and compaction. The WORK shall include for all bid items to be

completed, tested, as-built to CITY standards, and ready for acceptance by the appropriate government agency.

E. No separate payment for pavement restoration will be made unless specifically shown on the plans or directed by the ENGINEER. All bid items shall include pavement and walkway restoration.

1.02 MEASUREMENT - GENERAL

A. Weighing, measuring, and metering devices used to measure quantity of materials for Work shall be suitable for purpose intended and conform to tolerances and Specifications as specified in National Institute of Standards and Technology, Handbook 44.

B. Materials that are specified for measurement by the cubic yard measured in the vehicle shall be hauled in vehicles of such type and size that actual contents may be readily and accurately determined. Unless all vehicles are of uniform capacity, each vehicle must bear a plainly legible identification mark indicating its water level capacity. Vehicles shall be loaded to at least their water level capacity. Loads hauled in vehicles not meeting above requirements or loads of a quantity less than the capacity of the vehicle, measured after being leveled off as above provided, will be subject to rejection, and no compensation will be allowed for such material.

C. Where measurement of quantities depends on elevation of existing ground, elevations obtained during construction will be compared with those shown on Drawings. Variations of 1 foot or less will be ignored, and profiles shown on Drawings will be used for determining quantities. Variations greater than one foot will be considered in adjusting quantities.

D. Units of measure shown on Bid Form shall be as follows, unless specified otherwise. All methods of measurement shall be approved by the City.

Item	Method of Measurement
AC	Acre - Field Measure
AL	Allowance
CY	Cubic Yard - Field Measure within limits specified or shown, or measured in vehicle by volume, as specified
EA	Each - Field Count
GAL	Gallon - Field Measure
HR	Hour
LB	Pound(s) - Weight Measure
LF	Linear Foot - Field Measure

Item	Method of Measurement
LS	Lump Sum - Unit is one; no measurement will be made
SF	Square Foot
SY	Square Yard
TON	Ton - Weight Measure by Scale (2,000 pounds)

1.03 SCHEDULE OF PRICES BIID

A. General Requirements

B. Proposal Items

I. GENERAL PAY ITEMS

A. Item No. 1 – All Work Associated with the Mobilization & Demobilization (7.5%):

a. Payment for this item will be made at the lump sum price shall be full compensation for mobilization and demobilization activities. This includes but is not limited to Performance and Payment Guarantee & Insurance, scheduling, project coordination, CONTRACTOR staging area, CONTRACTOR and ENGINEER Field Offices, labor associated with permit acquisitions, audio-visual documentation of the existing conditions (sidewalks, curbs, driveways, fences, vegetation, pavement markings, etc.), performance of exploratory digging to uncover existing utility information (including mobilization and demobilization of test equipment and personnel / temporary pavement restoration), inspection of existing electrical facilities, temporary facilities, project signs, distribution of information and flyers to the affected residents and businesses, site cleanup, site restoration, sanitary facilities, and all other work not defined in other bid items necessary to prepare and complete the contract work. The payment for mobilization and demobilization shall not exceed 7.5% of the sum of Bid Item Nos. 6 through 125. Contractor may request initial payment after Notice to Proceed is issued by CITY. Partial payments for mobilization and demobilization shall be made as follows:

Construction % Complete	Allowable % of Lump Sum for Mobilization/Demobilization
After NTP	2.5
10	22.5
25	50
50	75
100	100

- 100% of the unit price paid upon completion of all testing.

B. Item No. 2 – All Work Associated with the Maintenance of Safe Pedestrian Traffic:

a. This shall include preparation for safe pedestrian traffic necessary for the construction of this project. See Section 01525 "Maintenance of Traffic" and all other references to traffic control in this document and any regulatory requirements.

b. Payment for maintenance of safe pedestrian traffic will be made at the lump sum (LS) price named in the Bid Schedule. Payment for maintenance of traffic shall be made in equal monthly lump sum amounts during the duration of the original contract. Payment shall be full compensation for all labor, equipment, material, and work required for maintenance of safe pedestrian traffic in accordance with the City of Fort Lauderdale. This item includes, but is not limited to, providing signs, cones, lights, signs, and barricades, installing temporary fencing and walkways as required to maintain safe pedestrian traffic, installing temporary plates for safe vehicular traffic and all other work incidental to the maintenance of safe pedestrian traffic as required by the City of Fort Lauderdale and the Contract Documents.

C. Item No. 3 – All Work Associated with the GIS Database Additions:

a. Payment for this bid item shall be made for the preparation and addition of the proposed infrastructure data to the existing City GIS Database. This includes but not be limited to all necessary adjustments to the implemented data to create a seamless addition to the existing infrastructure. This shall include all different types of utilities installed by the CONTRACTOR.

b. Payment for this item shall be paid at the lump sum (LS) price in the Bid Schedule after final acceptance of the documentation from the CITY.

D. Item No. 4 – All Work Associated with the As-Built/Record Drawings:

a. The lump sum price for this bid item shall be full compensation for preparation and submittal of As-Built/Record drawings, furnished in accordance with Contract Documents. For all improvements, the CONTRACTOR shall conform to the City of Fort Lauderdale standards and requirements. In general, the As-Builts shall depict constructed dimensions, elevations, grades and materials including locations of existing underground utilities found during construction. The as-builts shall be certified by a Florida Registered Land Surveyor and delivered to the ENGINEER for acceptance and final CITY acceptance. Final payment will be made only after submitted As-Built Drawings are accepted by the CITY. As-builts shall be prepared in ACAD format (latest version) and conform to the City Standards requirements for As-built/Record Drawing preparation. Refer to Section 01320 – Project Record Documents & Section 01320a – Supplement 2 – Data Dictionary 2020-0706 for additional information and requirements.

b. Payment for this item shall be paid at the lump sum (LS) price in the Bid Schedule after final acceptance of the record drawings and project closeout in accordance with the Contract Documents and the CITY.

E. Item No. 5 – All Work Associated with the Prevention Control and Abatement of Erosion and Water Pollution (1%):

a. Measurement for payment for preparation and implementation of the NPDES Permit/Environmental and Erosion Control Measures, which includes NPDES and SWPPP requirements for this item, will be made at the lump sum price named in the Bid Schedule.

b. Payment for this item shall not exceed 1% of the total contract price and shall include preparation, submittal, and approval of NPDES Permit Application (Notice of Intent and Notice of Termination), reporting by a person holding a certification as an FDEP NPDES Construction Site Inspector, preparing Stormwater Prevention Pollution Plan (SWPPP) and implementation of best management practices (BMP) and environmental pollution protection throughout construction including but not limited to silt fences, temporary stabilized gravel construction entrance(s), concrete wash down area(s), sandbags, straw bales, gutter buddies adjacent to existing and proposed curb inlets, drainage structure/inlet protection, and turbidity barriers as outlined in the DRAWINGS and required by the CITY. This bid item includes but is not limited to silt fence around the construction area and inlet protection.

c. Payment for this item will be made in equal monthly payments throughout the duration of active construction and will not be issued prior to Mobilization.

II. EARTHWORK

F. Item No. 6 – Clearing and Grubbing:

a. The Contract Unit Price Bid for this item shall constitute full compensation for furnishing all materials, labor and equipment for clearing and grubbing. This item includes clearing, grubbing, cleaning of obstructions, removal and disposal of debris off the site, stripping of grass and roots, removal of shrubs and trees less than 12” diameter and placement of material in the spoil pile, relocation of existing utilities, and all other incidentals required to clear work site for the completion of other work.

b. Payment for this item shall be paid at the lump sum (LS) price in the Bid Schedule.

G. Item No. 7 - Excavation

a. Measurement for payment to excavate for concrete slab and wall foundation will be based upon the actual number of cubic yard of such excavation performed all in accordance with the Contract Documents.

b. Payment for excavation for concrete slab and wall foundation will be made at the unit price per cubic yard named in the Item Response Form which unit price shall constitute full compensation for the excavation and shall include, but not be limited to, excavation, removal and disposal. Backfill of excavation, compaction and all restoration WORK shall be completed and paid under the applicable bid item for the slab being installed.

c. Excavation will be paid for on a cubic yard basis regardless of depth and width required to properly install the proposed slab and wall foundation.

III. FOUNDATION

H. Item No. 8 – Furnish and Install Helical Piles:

a. Measurement for furnishing and installing helical piles will be based upon a lump sum price for installing the piles which price shall constitute full compensation for the complete installation of piles, embedded plates and studs including driving, excavation, testing, clearing, temporary utility relocation, maintenance of existing services, root pruning in the locations and to the depths and elevations shown on the plans and approved by the project's structural engineer of record, and to the specifications in the Contract Documents and all other incidentals required and conforming to the City of Fort Lauderdale standards and permit and in accordance with the requirements of the Contract Documents.

b. Payment for furnishing and installing helical piles will be made at the lump sum price of piles named in the Bid Schedule for a complete and functional installation.

I. Item No. 9 – Furnish and Install Masonry Retaining Wall:

a. Measurement for payment for furnishing and installing masonry retaining wall will be based upon linear foot of such wall actually installed and approved by the project's engineer of record and conforming to the City of Fort Lauderdale standards and permit and all in accordance with the requirements of the Contract Documents.

b. Payment for furnishing and installing masonry retaining wall will be made at the unit price per linear foot of wall named in the Bid Schedule which price shall constitute full compensation for the complete installation of the wall including, excavation, backfill, compaction, root pruning and all else necessary for a complete and functional installation.

J. Item No 10 – Furnish and Place Stabilized Subgrade

a. Measurement for payment for compaction/stabilization of subgrade will be based upon the number of square yards of such materials actually compacted, all in accordance with the requirements of the Contract Documents.

b. Payment for compacting/stabilizing of subgrade will be made at the unit price per square yard indicated on the Bid Schedule, which price shall constitute full compensation for transportation, excavation, handling, cleaning, positioning and compacting of said bedding to a LBR of 40, importing fill material and disposal of excess waste or unsuitable material.

K. Item No. 11 – Furnish and Install Reinforced Concrete Base Slab:

a. The Contract Unit Price Bid for this item shall constitute full compensation for furnishing all materials, labor and equipment to install the Generator Reinforced Concrete Base Slab. This item includes cleaning of obstructions, relocation of existing utilities, installing formwork, reinforcement, plates and anchors to secure generator, installing concrete at the elevations specified in the Contract Documents and all other incidentals required to set the Generator reinforced Concrete Base Slab.

b. Payment for this item shall be paid at the lump sum (LS) price in the Bid Schedule.

L. Item No. 12 – Furnish and Install 6-foot Black Vinyl Chain Link Fence:

a. Measurement for payment to furnish & install 6.0’ height Black Vinyl chain link fence will be based upon the actual quantity, linear feet of such fence actually installed all in accordance with the Contract Documents.

b. Payment for furnishing and installing 6.0’ height Black Vinyl chain link fencing will be made at the unit price per linear foot of fence installed as named in the bid schedule, including but not limited to excavation, reinforcement, concrete footings, hardware, posts, gates etc. and all else necessary for a complete and functional installation.

IV. GENERATOR

M. Item No. 13 – Furnish and Install Generator:

a. The Contract Unit Price Bid for this item shall constitute full compensation for furnishing all materials, labor and equipment for the permanent natural gas Generator. This item includes anchoring the generator to the concrete base slab, coordinating and connecting to natural gas, furnishing and installing the conduits, and electrical wiring, including the grounding system, and connection to the existing electrical facilities at the stormstation complete and to the specifications in the Contract Documents and all other incidentals required.

b. Payment for this item shall be paid at the lump sum (LS) price in the Bid Schedule.

N. Item No. 14 – Furnish and Connect Electrical Equipment:

a. The Contract Unit Price Bid for this item shall constitute full compensation for furnishing all materials, labor and equipment to connect the Generator to

the electrical system at the stormstation. This item includes furnishing and installing the Automatic Transfer Switch, and connecting to the electrical facilities at the stormstation complete all in accordance with the requirements of the Contract Documents.

b. Payment for this item shall be paid at the lump sum (LS) price in the Bid Schedule.

O. Item No. 15 – Restoration of Paver Walkways

a. Measurement for payment for removal and restoration of paver walkways will be based upon the actual number of square yards (SY) of such paver walkways restored, all in accordance with the requirements of the Contract Documents.

b. Payment for removal and restoration of paver walkways will be made at the unit price per square yard (SY) named in the Bid Schedule which price shall constitute full compensation for completing said work, including all removal and disposal of existing material, earthwork, grading, base compaction, construction of the walkway to the same depth and material as the existing one, base material, sand, furnishing and setting for expansion joint material, disposal of excess material, densities passed, and the appurtenant items for which separate payment is not specifically included in the Bid Schedule.

c. No payment will be made for removal and restoration of walkways outside the limits shown on the Drawings or not approved by the ENGINEER. Walkway restoration on private property shall be done with owner's written consent and approved by the ENGINEER, to accommodate grade changes.

V. LANDSCAPING

P. Item No. 16 – Restoration of Existing Irrigation System:

a. Measurement for payment for restoration of existing irrigation system will be made at a lump sum price named in the Bid Schedule of such irrigation system modification/restoration.

b. Payment for irrigation system restoration will be made at a lump sum price named in the Bid Schedule which price shall constitute full compensation for the complete restoration of the irrigation system including capping existing system during construction and installing new irrigation. Repaired irrigation system shall be connected to existing irrigation systems. Irrigation systems shall match coverage/heads prior to construction.

c. Irrigation systems shall be restored with pipe matching the size of the existing pipe and necessary adapters and coupling at each end splicing the restored pipe in place. All work shall meet the approval of the ENGINEER.

Q. Item No. 17 – Furnish and Install Plantings (Shrubs, Small Trees, Flowers, etc.):

a. Payment for the item will be made at the per each lot (EA), named in the Bid Schedule which price shall constitute full compensation for the restoration of shrubs, bushes, small trees (above 2" caliber), flowers including, but not limited to cost of plant materials, fertilizer, watering, excavation, rental, equipment operation, landscape support material costs, planting, labor and all other work necessary to restore plantings to original condition.

R. Item No. 18 – Furnish and Install Sod (St Augustine for irrigated areas and Bahia sod)

a. The Contract Unit Price Bid for this item shall constitute full compensation for furnishing and installing sod (St Augustine sod in irrigated areas and Bahia sod elsewhere) including all materials, labor, tools and equipment to restore to original or better conditions all green areas affected by construction operations in accordance with the Plans and Specifications. This item includes: excavation, backfilling, compaction, grading, top soil, sod, watering, fertilizing, disposal offsite of suitable or unsuitable material, erosion control, sedimentation control, dust control, and all other appurtenances required to restore disturbed areas and as acceptable by the CITY. Sod areas shall be graded per Contract Documents prior to sod installation.

b. Payment for this item shall be paid at the unit price per square yard (SY) named in the Bid Schedule.

VI. ALLOWANCE ACCOUNTS

S. Item No. 19 - Permit, Licenses & Fees Allowance:

a. The allowance account for this item shall be full compensation for all permits, licenses, and fees required of the Contractor from the various agencies having jurisdiction over the construction of the project. The allowance amount indicated is an estimate of the fees required. Payment will be based on the actual permit, license or fee paid directly to the agency, documented by paid receipts, and specifically excluding any labor, markups, overhead and profit, administration, or other costs involved in obtaining the permits, licenses or fees. Fees specifically excluded from this allowance include, but are not limited to, re-inspection fees and expired permit fees. Any portion of this fund remaining after all authorized payments have been made will be withheld from contract payment and will remain with the City of Fort Lauderdale.

T. Item No. 20 - Natural Gas Connection Allowance:

a. The allowance account for this item shall be full compensation for all permits, licenses, and construction costs required to connect a natural gas supply to the generator in its final location. Any portion of this fund remaining after all authorized payments have been made will be withheld from contract payment and will remain with the City of Fort Lauderdale.

1.04 NONPAYMENT FOR REJECTED OR UNUSED PRODUCTS

A. Payment will not be made for following:

1. Loading, hauling, and disposing of rejected material.

2. Quantities of material wasted or disposed of in manner not called for under Contract Documents.

3. Rejected loads of material, including material rejected after it has been placed by reason of failure of Contractor to conform to provisions of Contract Documents.

4. Material not unloaded from transporting vehicle.

5. Defective Work not accepted by City.

6. Material remaining on hand after completion of Work.

1.05 PARTIAL PAYMENT FOR STORED MATERIALS AND EQUIPMENT

A. Partial Payment: Payment for stored materials and equipment shall only be made with submittal of “paid” receipts. No partial payments will be made for materials and equipment delivered or stored unless Shop Drawings or preliminary operation and maintenance manuals are acceptable to Engineer.

B. Final Payment: Will be made only for products incorporated in Work; remaining products, for which partial payments have been made, shall revert to Contractor unless otherwise agreed, and partial payments made for those items will be deducted from final payment.

1.06 ALLOWANCES

A. The allowances shall be used only at the discretion of and as ordered by the City.

B. Any portion of these allowances that remain after all authorized payments have been made will be withheld from contract payments and will remain with the City.

PART 2 - PRODUCTS

(NOT USED)

PART 3 – EXECUTION

(NOT USED)

- END OF SECTION -

SECTION 01070

ABBREVIATIONS

PART 1 - GENERAL

1.01 THE REQUIREMENT

A. Wherever in these specification references are made to the standards, specifications, or other published data of the various national, regional, or local organizations, such organizations may be referred to by their acronym or abbreviation only. As a guide to the user of these specifications, the following acronyms or abbreviations which may appear in these specifications shall have the meanings indicated herein.

1.02 ABBREVIATIONS AND ACRONYMS

AAMA	Architectural Aluminum Manufacturer's Association
AASHTO	American Association of the State Highway and Transportation Officials
ACI	American Concrete Institute
ACOE	Army Corps of Engineers
ACPA	American Concrete Pipe Association
AFBMA	Anti-Friction Bearing Manufacturer's Association, Inc.
AGMA	American Gear Manufacturer's Association
AHGDA	American Hot Dip Galvanizers Association
AI	The Asphalt Institute
AIA	American Institute of Architects
AISC	American Institute of Steel Construction
AISI	American Iron and Steel Institute
AITC	American Institute of Timber Construction
AMCA	Air Moving and Conditioning Association
ANSI	American National Standards Institute, Inc.
APA	American Plywood Association
API	American Petroleum Institute
APHA	American Public Health Association
APWA	American Public Works Association

ASA	Acoustical Society of America
ASAE	American Society of Agriculture Engineers
ASCE	American Society of Civil Engineers
ASHRAE	American Society of Heating, Refrigerating, and Air-Conditioning Engineers
ASLE	American Society of Lubricating Engineers
ASME	American Society of Mechanical Engineers
ASMM	Architectural Sheet Metal Manual
ASSE	American Society of Sanitary Engineers
ASTM	American Society for Testing and Materials
AWPA	American Wood Preservers Association
AWPI	American Wood Preservers Institute
AWS	American Welding Society
AWWA	American Water Works Association
BCEPGMD	Broward County Environmental Protection and Growth Management Department
BCHD	Broward County Health Department
BHMA	Builders Hardware Manufacturer's Association
CMA	Concrete Masonry Association
CRSI	Concrete Reinforcing Steel Institute
DIPRA	Ductile Iron Pipe Research Association
EIA	Electronic Industries Association
EPA	Environmental Protection Agency
ETL	Electrical Test Laboratories
FBC	Florida Building Code
FDEP	Florida Department of Environmental Protection
FDOT	Florida Department of Transportation
FS	Federal Specifications

IEEE	Institute of Electrical and Electronics Engineers
IES	Illuminating Engineering Society
IPCEA	Insulated Power Cable Engineers Association
ISA	Instrument Systems and Automation
ISO	International Organization for Standardization
MBMA	Metal Building Manufacturers Association
MMA	Monorail Manufacturers Association
MTI	Marine Testing Institute
NAAM	National Association of Architectural Metal Manufacturers
NACE	National Association of Corrosion Engineers
NBS	National Bureau of Standards
NEC	National Electrical Code
NEMA	National Electrical Manufacturer's Association
NFPA	National Fire Protection Association
NIOSH	National Institute of Occupational Safety and Health
NIST	National Institute of Standards and Testing
NRCA	National Roofing Contractors Association
NSF	National Science Foundation
OSHA	Occupational Safety and Health Administration
PCA	Portland Cement Association
SMACCNA	Sheet Metal and Air Conditioning Contractors National Association
SSPC	Society for Protective Coatings
SSPWC	Standard Specifications for Public Works Construction
SFWMD	South Florida Water Management District
UL	Underwriters Laboratories, Inc.

PART 2 - PRODUCTS

(NOT USED)

PART 3 - EXECUTION

(NOT USED)

- END OF SECTION -

SECTION 01090

REFERENCE STANDARDS

PART 1 - GENERAL

1.01 THE REQUIREMENT

A. Titles of Sections and Paragraphs: Captions accompanying specification sections and paragraphs are for convenience of reference only, and do not form a part of the Specifications.

B. Applicable Publications: Whenever in these Specifications references are made to published specifications, codes, standards, or other requirements, it shall be understood that wherever no date is specified, only the latest specifications, standards, or requirements of the respective issuing agencies which have been published as of the date of the opening of bids, shall apply; except to the extent that said standards or requirements may be in conflict with applicable laws, ordinances, or governing codes. No requirements set forth herein or shown on the Drawings shall be waived because of any provision of, or omission from, said standards or requirements.

C. Specialists, Assignments: In certain instances, Specification text requires (or implies) that specific work is to be assigned to specialists or expert entities, who must be engaged for the performance of that work. Such assignments shall be recognized as special requirements over which the Contractor has no choice or option. These requirements shall not be interpreted so as to conflict with the enforcement of building codes and similar regulations governing the Work; also, they are not intended to interfere with local union jurisdiction settlements and similar conventions. Such assignments are intended to establish which party or entity involved in a specific unit of work is recognized as "expert" for the indicated construction processes or operations. Nevertheless, the final responsibility for fulfillment of the entire set of contract requirements remains with the Contractor.

1.02 REFERENCE SPECIFICATIONS, CODES, AND STANDARDS

A. Without limiting the generality of other requirements of the specifications, all work specified herein shall conform to or exceed the requirements of all applicable codes.

B. References herein to "Building Code" shall mean the Florida Building Code (FBC) Broward Edition. The latest edition of the code as approved and used by the local agency as of the date of the opening of bids, as adopted by the agency having jurisdiction, shall apply to the Work herein, including all addenda, modifications, amendments, or other lawful changes thereto.

C. In case of conflict between codes, reference standards, Drawings and the other Contract Documents, the most stringent requirements shall govern. All conflicts shall be brought to the attention of the Engineer for clarification and directions prior to ordering or providing any materials or labor. The Contractor shall follow the most stringent requirements.

D. Applicable Standard Specifications: The Contractor shall construct the Work specified herein in accordance with the requirements of the Contract Documents and the referenced portions of those referenced codes, standards, and Specifications listed herein.

E. References herein to "OSHA Regulations for Construction" shall mean Title 29, Part 1926, Construction Safety and Health Regulations, Code of Federal Regulations (OSHA), including all changes and amendments thereto.

F. References herein to "OSHA Standards" shall mean Title 29, Part 1910, Occupational Safety and Health Standards, Code of Federal Regulations (OSHA), including all changes and amendments thereto.

PART 2 - PRODUCTS

(NOT USED)

PART 3 - EXECUTION

(NOT USED)

- END OF SECTION -

SECTION 01200

PROJECT MEETINGS

PART 1 - GENERAL

1.01 PRECONSTRUCTION CONFERENCE

A. A preconstruction conference will be held after award of contract and prior to the Notice to Proceed. The Engineer shall prepare and distribute the meeting agenda and shall preside at the meeting. The Engineer shall record and distribute minutes of the proceedings and decisions.

B. The Contractor shall provide a Project Superintendent and a dedicated Project Manager specific to this project as a supervisor to oversee proper performance of the Work. The Project Manager shall attend all meetings and have the authority to make decisions on behalf of the General Contractor. The Project Manager shall be responsible for all coordination, document handling, submittal review and processing, quality control, and project scheduling. The Project Manager, once approved by the City and the Engineer shall not be replaced without prior consent by the City and Engineer.

1. The Project Manager and Project Superintendent shall be direct employees of the Prime Contractor.

2. The Project Manager and Project Superintendent shall fluently speak, read and write in English.

C. Attendance:

1. City

2. Engineer

3. Program Manager

4. Contractor’s Project Manager

5. Contractor’s Project Superintendent

6. Major Subcontractors

D. Minimum Agenda:

1. Tentative construction and submittal schedules

2. Critical work sequencing

3. Designation of responsible personnel

4. Processing of Field Decisions and Change Orders

5. Adequacy of distribution of Contract Documents

6. Submittal of Shop Drawings and samples
7. Procedures for maintaining record documents
8. Use of site and City's requirements
9. Major equipment deliveries and priorities
10. Safety and first aid procedures
11. Security procedures
12. Housekeeping procedures
13. Processing of Partial Payment Requests
14. General regard for community relations

1.02 PRELIMINARY CPM SCHEDULE REVIEW MEETING

A. The Contractor shall participate in a Preliminary CPM Schedule Review Meeting in accordance with the requirements of Section 01300.

1.03 PROGRESS MEETINGS

A. Progress meetings will be held weekly at the Field Office during the performance of the work of this Contract. Additional meetings may be called as progress of work dictates. Day and time of progress meetings will be scheduled at the Preconstruction Meeting.

B. Engineer will prepare and distribute agenda, preside at meetings and record minutes of proceedings and decisions. Engineer will distribute copies of minutes to participants.

C. Attendance:

1. City
2. Engineer
3. Program Manager
4. Contractor’s Project Manager
5. Contractor’s Project Superintendent
6. Subcontractors, as pertinent to the agenda

D. Minimum Agenda:

1. Review and approve minutes of previous meetings.
2. Review progress of Work since last meeting.
3. Review proposed 30-60 day construction schedule.

4. Note and identify problems which impede planned progress.

5. Develop corrective measures and procedures to regain planned schedule.

6. Revise construction schedule as indicated and plan progress during next work period.

7. Maintaining of quality and work standards.

8. Complete other current business.

9. Schedule next progress meeting.

1.04 NEIGHBORHOOD ASSOCIATION MEETINGS

A. The Contractor shall attend meetings with the local Neighborhood Associations and other stakeholders as requested by the City. Contractor shall be prepared to provide information on construction schedule, scope of work, impacts to local residents, and other coordination items. Meetings shall be held quarterly throughout the duration of construction.

1.05 BROWARD COUNTY TRAFFIC ENGINEERING SCHOOL SAFETY COORDINATOR

A. Thirty (30) days prior to the commencement of construction, the Contractor shall notify the "School Safety Coordinator" at Broward County Traffic Engineering Division to set up a pre-work meeting.

1.06 OTHER MEETINGS

A. The Contractor shall attend and participate in other meetings as required during execution of the Work. These meetings may include, but are not limited to, the following:

1. Meetings requested by regulatory agencies having jurisdiction over the project

2. Meetings with utility entities for coordination purposes throughout the construction period

3. Meetings with other stakeholders including City officials, residents, and businesses

4. Coordination meetings with other Contractors conducting work at the site

PART 2 - PRODUCTS

(NOT USED)

PART 3 - EXECUTION

(NOT USED)

- END OF SECTION -

SECTION 01300

SUBMITTALS

PART 1 - GENERAL

1.01 THE REQUIREMENT

A. This section specifies the means of all submittals. All submittals, whether their final destination is to the City, Engineer, or other representatives of the City, shall be directed through the Engineer. A general summary of the types of submittals and the number of copies required is as follows:

Copies to Engineer	Type of Submittal
E	Progress Schedule
E	Construction Schedule
E	Schedule of Payment Items
4 + E	Progress Payment Applications
3 + E	Shop Drawings
2 + E	Warranties
E	Audio Visual Preconstruction Record
E	Project Photographs
2 + E	Certificates of Compliance
2*	Product Samples
3 + E	Operation and Maintenance Manual
3 + E	Record Drawings
E	As Built GIS Database
2 + E	Elevation Certificates for New Buildings – Certified by Surveyor

E – Electronic submittal in pdf format.
* Unless otherwise required in the specific Section where requested.

B. All submittals shall also be submitted to Engineer electronically.

1.02 SUBMITTAL PROCEDURES

A. The Contractor shall transmit each submittal with a form acceptable to the Engineer, clearly identifying the project Contractor, the enclosed material and other pertinent information specified in other parts of this section. Identify variations from Contract Documents and

Product or system limitations which may be detrimental to successful performance of the completed Work.

B. Revise and resubmit submittals as required, identify all changes made since previous submittals. Resubmittals shall be noted as such.

C. Distribute copies of reviewed submittals to concerned parties. Instruct parties to promptly report any inability to comply with provisions.

D. All electronic submittals shall be digitally submitted to the Engineer through the construction project management system Procore (www.procore.com). All submittals shall be numbered, labeled and dated. See the attached Procore Guidelines at the end of this specification section for additional information.

1.03 CONSTRUCTION PROGRESS SCHEDULE

A. The Contractor shall have the capability of preparing and utilizing the specified construction progress scheduling techniques. A statement of capability shall be submitted in writing to the Engineer with the issuance of the Frist Notice-to-Proceed by the City and will verify that either the Contractor's organization has in-house capability qualified to use the technique or that the Contractor employs a consultant who is so qualified. Capability shall be verified by description of the construction projects to which the Contractor or its consultant has successfully applied the scheduling technique and which were controlled throughout the duration of the project by means of systematic use and updating of the construction progress schedule, the network analysis and associated reports. The submittal shall include the name of the individual on the Contractor's staff who will be responsible for the construction progress schedule, and associated reports and for providing the required updating information of same. The Contractor shall submit its proposed progress (baseline) schedule to the Engineer for review and comment in accordance with the Contract Documents. The Engineer shall have the authority to determine acceptability/correctness of the schedule logic and activity interrelationships. The use of extraneous, nonworking activities and activities which add restraints to the construction schedule shall not be accepted. Baseline schedules that do not meet their contract completion dates shall not be accepted.

B. The Contractor’s progress schedule (baseline and monthly updates) shall be computer generated and resource loaded. Each computer-generated construction progress schedule and associated report shall include the following tabulations: a list of activities in numerical order, a list of activity precedence, schedules sequenced by Early Start Date, Total Float, and Late Start Date. Each schedule, and report shall include the following minimum items:

1. Activity Numbers

2. Estimated Duration

3. Activity Description

4. Early Start Date (Calendar Dated)

5. Early Finish Date (Calendar Dated)

6. Latest Allowable Start Date (Calendar Dated)

7. Latest Allowable Finish Date (Calendar Dated)

8. Status (whether critical)

9. Total Float and Free Float

10. Resource Plots

C. In addition, each construction progress schedule, network analysis and report shall be prefaced with the following summary data:

1. Contract Name and Number

2. Contractor's Name

3. Contract Duration and Float

4. Contract Schedule with critical path.

5. The Effective or Starting Date of The Schedule (the date indicated in the Notice-to-Proceed)

D. The work day to calendar date correlation shall be based on an 8-hour day and 40-hour week with adequate allowance for holidays, adverse weather and all other special requirements of the Work. Normal work hours are Monday through Friday, 7:30 am to 4:30 pm.

E. If the Contractor desires to make changes in its method of operating which affect the construction progress schedule and related items, the Contractor shall notify the Engineer in writing stating what changes are proposed and the reason for the change. If the Engineer accepts these changes, in writing, the Contractor shall revise and submit, without additional cost to the City, all of the affected portions of the construction progress schedule, and associated reports. The construction progress schedule and related items shall be adjusted by the Contractor only after prior acceptance, in writing by the Engineer. Adjustments may consist of changing portions of the activity sequence, activity durations, division of activities, or other adjustments as may be required. The addition of extraneous, nonworking activities and activities which add restraints to the construction progress schedule shall not be accepted.

F. Except where earlier completions are specified, schedule dates which show completion of all Work prior to the contract completion date shall, in no event, be the basis for claim for delay against the City by the Contractor.

G. Construction progress schedules and related items which contain activities showing negative float or which extend beyond the contract completion date will be accepted only upon the condition that the Contractor will comply with recovery schedule requirements as specified in paragraph H. below.

H. Whenever it becomes apparent from the current construction progress schedule and associated reports that delays to the critical path have resulted and the contract completion date will not be met, or when so directed by the Engineer, the Contractor shall take some or all of the following actions at no additional cost to the City. They shall submit to the Engineer for approval, a written statement of the steps they intend to take to remove or arrest the delay to the critical path in the current construction progress schedule, including a computer generated schedule revision to reflect proposed actions

1. Increase construction personnel in such quantities and crafts as will substantially eliminate the backlog of work.

2. Increase the number of working hours per shift, shifts per day, working days per week, the amount of construction equipment, or any combination of the foregoing, sufficiently to substantially eliminate the backlog of work.

3. Reschedule activities to achieve maximum practical concurrence of accomplishment of activities, and comply with the revised schedule.

I. When so requested by the Engineer, the Contractor should fail to submit a written statement of the steps they intend to take or should fail to take such steps as reviewed and accepted in writing by the Engineer, the Engineer may direct the Contractor to increase the level of effort in personnel (trades), equipment and work schedule (overtime, weekend and holiday work, etc.) to be employed by the Contractor in order to remove or arrest the delay to the critical path in the current construction progress schedule, and the Contractor shall promptly provide such level of effort at no additional cost to the City.

J. If the completion of any activity, whether or not critical, falls more than 100 percent behind its previously scheduled and accepted duration, the Contractor shall submit to the Engineer for approval a schedule adjustment showing each such activity divided into two activities reflecting completed versus uncompleted work.

K. Shop drawings which are not approved on the first submittal or within the time scheduled, and equipment which does not pass the specified tests and certifications shall be immediately rescheduled.

L. The contract time will be adjusted only in accordance with the General Requirements and other portions of the Contract Documents as may be applicable. If the Engineer finds that the Contractor is entitled to any extension of the contract completion date, the Engineer's determination as to the total number of days extension shall be based upon the current construction progress schedule and on all data relevant to the extension. Such data shall be included in the next updating of the schedule and related items. Actual delays in activities which, according to the construction progress schedule, do not affect any contract completion date will not be the basis for a change therein.

M. From time to time it may be necessary for the contract schedule of completion time to be adjusted by the City in accordance with the General Requirements and other portions of the Contract Documents as may be applicable. Under such conditions, the Engineer will direct the Contractor to reschedule the Work or contract completion time to reflect the changed conditions, and the Contractor shall revise the construction progress schedule and related items accordingly, at no additional cost to the City.

N. Available float time may be used by the City through the City's Engineer.

O. The City controls the float time and, therefore, without obligation to extend either the overall completion date or any intermediate completion dates, the City may initiate changes that absorb float time only. City initiated changes that affect the critical path on the network diagram shall be the sole grounds for extending the completion dates. Contractor initiated changes that encroach on the float time may be accomplished only with the City's concurrence. Such changes, however, shall give way to City initiated changes competing for the same float time.

P. To the extent that the construction project schedule, or associated report or any revision thereof shows anything not jointly agreed upon or fails to show anything jointly agreed upon, it shall not be deemed to have been accepted by the Engineer. Failure to include on a schedule any element of Work required for the performance of this Contract shall not excuse the Contractor from completing all Work required within any applicable completion date, notwithstanding the review of the schedule by the Engineer.

Q. Review and acceptance of the construction progress schedule, and related reports, by the Engineer is advisory only and shall not relieve the Contractor of the responsibility for accomplishing the Work within the contract completion date. Omissions and errors in the construction progress schedule, and related reports shall not excuse performance less than that required by the Contract and in no way make the Engineer an insurer of the Contractor's success or liable for time or cost overruns flowing from any shortcomings in the construction progress schedule, and related reports.

R. The Contractor shall present and discuss the proposed schedule at the preconstruction conference.

S. The construction progress schedule shall be based upon the precedence diagramming method of scheduling and shall be prepared in the form of a horizontal bar chart showing in detail the proposed sequence of the Work and identifying all construction activities included but not limited to yard piping, all structures and treatment units and all related Work specified herein to be performed under the Contract. The schedule shall be time scaled, identifying the first day of each week, with the estimated date of starting and completion of each stage of the Work in order to complete the project within the contract time. The project critical path shall be clearly identified in color or by other means acceptable to the Engineer.

T. The progress schedule shall be plotted on 22 inch by 34 inch and 11 inch by 17 inch paper and shall be revised and updated monthly, depicting progress through the last day of the current month and scheduled progress through completion. Up to date hard copies of the schedule shall be submitted along with the application for monthly progress payments for the same period.

U. The construction progress schedule shall be developed and maintained using Primavera and Primavision software as manufactured by Primavera Systems, Inc., or equal.

V. The Contractor shall produce a 3-week Look Ahead Schedule for construction meetings on a bi-weekly basis or as determined by City.

1.04 SCHEDULE OF PAYMENT ITEMS

A. The Contractor shall submit a Schedule of Payment Items for review in accordance with the Contract Documents. The schedule shall contain the installed value of the component parts of Work for the purpose of making progress payments during the construction period and shall directly correlate on an item by item basis (unless otherwise accepted by the Engineer) to each individual activity detailed in the construction progress schedule. The sum of all scheduled items shall equal the total value of the Contract. Reference section entitled “Measurement and Payment” for further details.

B. The Contractor shall expand or modify the above schedule and materials listing as required by the Engineer's initial or subsequent reviews.

1.05 PROGRESS PAYMENT APPLICATIONS

A. Applications for payments shall be made to the Engineer for review in accordance with Article 7 of the Construction Agreement.

1.06 SHOP DRAWINGS

A. The Contractor shall submit electronic copies of shop drawings in Adobe Portable Document Format (PDF) format for review by all general, civil, mechanical, structural, architectural, electrical and instrumentation related improvements, including details, piping layout and appurtenances, wiring, color selection charts, materials and equipment fabricated especially for this Contract, and materials and equipment for which such Drawings are specified or specifically requested by the Engineer.

B. Within one week of shop drawing approval (Furnish as Submitted or Furnish as Corrected), Contractor shall provide three (3) color hard copies of each shop drawing. Contractor may be required to submit certain sheets in large format to ensure all portions of shop drawing are legible. Engineer shall distribute electronic and hard copies to the City.

C. Shop drawings shall show the principal dimensions, weight, structural and operating features, space required, clearances, type and/or brand of finish or shop coat, grease fittings, etc., depending on the subject of the Drawings.

D. When so specified, or if considered by the Engineer to be acceptable, the manufacturer's specifications, catalog data, descriptive matter, illustrations, etc. may be submitted for review in place of shop drawings. In such case, the requirements shall be as specified for shop drawings, insofar as applicable.

E. Time delays caused by rejection of submittals are not cause for extra charges to the City or time extensions.

F. Requirements: The Contractor shall be responsible for the prompt submittal of all shop drawings so that there shall be no delay to the Work due to the absence of such drawings. Electronic copies of all shop drawings shall be submitted as directed by the Engineer during the preconstruction meeting. Shop drawings shall be submitted as a single, complete, and searchable image format document in PDF format with bookmarks for shop drawings consisting of multiple sections and/or more than 20 pages total.

G. All shop drawings shall be submitted to the Engineer through the Contractor. Each shop drawing shall be individually submitted. The Contractor is responsible for obtaining shop drawings from subcontractors and returning reviewed shop drawings to them. All Drawings shall be clearly marked with the name of the project, City, Contractor, specification section number and building, equipment, or structure to which the drawing applies. Drawings shall be suitably numbered stamped and signed by the Contractor. Each shop drawing shall be accompanied by a transmittal form listing the information identified above.

H. All submissions shall be dated and properly referenced to the specifications section and Contract Drawing number. The submittal number shall match the following submittal numbering system (or an equivalent system as approved by the Engineer):

Submittal Numbering System

1. Package ID: The package number will reflect the CSI (specification) section number as it appears in the specifications.

2. Subgroup ID: The submittal number will include the CSI number followed by the submittal number and a sequential letter indicating resubmittal number.

Example:

Package	**Submittal**	**Description**
03300	03300-001	Concrete Admixture A, First Submittal
	03300-001A	Concrete Admixture A, Second Submittal
	03300-001B	Concrete Admixture A, Third Submittal
	03300-002	Concrete Admixture B, First Submittal

I. Product Data: Where manufacturer's publications in the form of catalogs, brochures, illustrations, or other data sheets are submitted in lieu of prepared shop drawings, such submission shall specifically indicate the particular item offered. Identification of such items and relative pertinent information shall be made with indelible ink. Submissions showing only general information will not be accepted.

J. Product data shall include materials of construction, dimensions, performance characteristics, capacities, wiring diagrams, piping and controls, etc.

K. Warranties: When warranties are called for, a sample of the warranty shall be submitted with the shop drawings. The sample warranty shall be the same form that will be used for the actual warranty. Actual warranties shall be originals and notarized.

L. CONTRACTOR's Review: Only submittals which have been checked and corrected should be submitted to the Contractor by its subcontractors and vendors. Prior to submitting shop drawings to the Engineer, the Contractor shall check thoroughly all such shop drawings to satisfy itself that the subject matter thereof conforms to the Drawings

and Specifications in all respects. Shop drawings which are correct shall be marked with the date, checker's name and indications of the Contractor's approval, and then shall be submitted to the Engineer. Other shop drawings submitted to the Engineer will be returned to the Contractor unreviewed.

M. CONTRACTOR's Responsibility: The Engineer's review of shop drawings will be general and shall not relieve the Contractor of the responsibility for details of design, dimensions, etc., necessary for proper fitting and construction of the Work required by the Contract and for achieving the specified performance.

N. CONTRACTOR's Modifications: For submissions containing departures from the Contract Documents, the Contractor shall include proper explanation in their letter of transmittal. Should the Contractor submit for review equipment that requires modifications to the structures, piping, layout, etc. detailed on the Drawings, or specified, Contractor shall also submit for review details of the proposed modifications. If such equipment and modifications are accepted, the Contractor, at no additional cost to the City, shall do all Work necessary to make such modifications.

O. Substitutions: Whenever a particular brand or make of material, equipment, or other item is specified, or is indicated on the Drawings, it is for the purpose of establishing a standard of quality, design, and type desired and to supplement the detailed specifications. Any other brand or make which is equivalent to that specified or indicated may be offered as a substitute subject to the following provisions:

1. The Contractor shall submit for each proposed substitution sufficient details, complete descriptive literature, and performance data together with samples of the materials, where feasible, to enable the Engineer to determine if the proposed substitution is equal, in all respects including, but not limited to, quality, performance, ease of maintenance, availability of spare parts, and experience record.

2. The Contractor shall submit certified tests, where applicable, by an independent laboratory attesting that the proposed substitution is equal.

3. A list of installations where the proposed substitution is equal. Such listing shall cover a minimum of the previous three years and will furnish project names and contact phone numbers.

4. Where the acceptance of a substitution requires excessive review by the Engineer, revision or redesign of any part of the Work, all such additional review costs, revisions and redesign, and all new drawings and details required therefore, shall be at the Contractor's expense.

5. In all cases the Engineer shall be the sole judge as to whether a proposed substitution is to be accepted. The Contractor shall abide by the Engineer's decision when proposed substitute items are judged to be unacceptable and shall in such instances furnish the item as specified. No substitute items shall be used in the Work without written acceptance of the Engineer.

6. Acceptance of any proposed substitution shall in no way release the Contractor from any of the provisions of the Contract Documents.

7. The City may require, at Contractor's expense, a special performance guarantee or other surety with respect to any substitute.

P. Complete Submittals: Each submittal shall be complete in all aspects incorporating all information and data required to evaluate the products' compliance with the Contract Documents. Partial or incomplete submissions shall be returned to the Contractor without review.

Q. Engineer's Review: The Engineer will review and return by email the reviewed shop drawings within 15 calendar days of receipt of such shop drawings. Reviewed shop drawings will be returned to the Contractor by email and marked with the appropriate box checked either "FURNISH AS SUBMITTED", "FURNISH AS CORRECTED" or "REVISE AND RESUBMIT".

R. Work Prior to Review: No material or equipment shall be purchased, fabricated especially for this Contract, or delivered to the project site until the required shop drawings have been submitted, processed, reviewed by the Engineer and marked either "FURNISH AS SUBMITTED" or "FURNISH AS CORRECTED". All materials and Work involved in the construction shall be as represented by said shop drawings.

S. The Contractor shall not proceed with any portion of the Work (such as the construction of foundations) for which the design and details are dependent upon the design and details of equipment for which submittal review has not been completed.

1.07 WARRANTIES

A. Warranties called for in the Contract Documents shall be originals and submitted to the City through the Engineer. When warranties are required, they shall be submitted prior to request for payment.

B. When advance copies of warranties are requested, they shall be submitted with, and considered as shop drawings.

1.08 CERTIFICATES

A. Four copies of certificates of compliance and test reports shall be submitted for requested items to the Engineer prior to request for payment.

1.09 PRODUCT SAMPLES

A. Contractor shall furnish for review all product samples as required by the Contract Documents or requested by the Engineer to determine compliance with the specifications.

B. Samples shall be of sufficient size or quantity to clearly illustrate the quality, type, range of color, finish or texture and shall be properly labeled to show complete project identification, the nature of the material, trade name of manufacturer and location of the Work where the material represented by the sample will be used.

C. Samples shall be checked by the Contractor for conformance to the Contract Documents before being submitted to the Engineer and shall bear the Contractor's stamp certifying

that they have been so checked. Transportation charges on samples submitted to the Engineer shall be prepaid by the Contractor.

D. The Engineer's review will be for compliance with the Contract Documents, and its comments will be transmitted to the Contractor with reasonable promptness.

E. Acceptable samples will establish the standards by which the completed Work will be judged.

1.10 OPERATION AND MAINTENANCE MANUALS

A. General: The Contractor shall furnish and deliver to the Engineer three (3) complete Operation and Maintenance (O&M) Manuals for the substantial, complete systems including instructions, technical bulletins, and any other printed matter such as diagrams, prints or drawings, containing full information required for the proper operations, maintenance, and repair of all Contractor furnished equipment. Also included shall be a spare parts diagram and complete spare parts list. These requirements are a prerequisite to the operation and acceptance of equipment. Each O&M Manual shall be bound together in appropriate three-ring hard cover binders. A detailed table of contents shall be provided for each Manual. Provide an appropriate label on the binder edge. Provide tabs and separate sections for operation, maintenance, spare parts, etc.

B. Written operations and maintenance instructions are required for all equipment items supplied for this project. The amount of detail shall be commensurate with the complexity of the equipment item. Extensive pictorial cuts of equipment are required for operator reference in servicing.

C. Information not applicable to the specific piece of equipment installed on this project shall be struck from the Manual by the Contractor. Information provided shall include a source of replacement parts and names of service representatives, including addresses and telephone numbers.

D. When written instructions include shop drawings and other information previously reviewed by the Engineer, only those editions which were accepted by the Engineer, and which accurately depict the equipment installed, shall be incorporated in the O&M Manual.

E. Maintenance and Lubrication Schedules: The Contractor shall include in the O&M Manual, for all Contractor furnished mechanical and electrical equipment including switchgear and motor control centers, instrumentation, valves, gates, etc., complete maintenance and lubrication schedules. Separate forms shall be submitted for each piece of equipment. Sample forms are included at the end of this section. As an alternate to the forms, the Contractor may submit an electronic copy of the manufacturer's recommended preventive maintenance requirements.

F. The Contractor shall include in the O&M Manual, for all Contractor furnished pumps and motors, complete data sheets. Separate forms shall be submitted for each different type and size of pump and motor. Sample forms are included at the end of this section.

G. The Contractor shall also furnish and deliver to the Engineer three (3) USB drives with all O&M manuals in an electronic format suitable for downloading into the City O&M database system. All manuals and drawings for the vendor provided equipment, sub-system or

system shall be in Adobe Portable Document Format (PDF) format. They shall be PDF Formatted Text and Graphics (formerly Normal) or PDF Searchable Image (formerly Image+Text). If submitted in Searchable Image format, they shall be Optical Character Recognized (OCR'ed) at a 95 percent confidence level, using Adobe Acrobat Capture 3.x or an equivalent product. There shall be links from all Table of Contents entries to the actual occurrence in the body of the manual. Bookmarks shall be created for all linked Table of Contents entries. This requirement applies to all equipment to be furnished on this project.

1.11 RECORD DRAWINGS

A. Requirements for record drawings shall be in accordance with Section 01320.

1.12 AS BUILT GIS DATABASE

A. Requirements for the As-Built GIS Database updates shall be in accordance with Section 01320.

1.13 ELEVATION CERTIFICATES (FOR NEW BUILDINGS)

A. Two copies of Elevation Certificates for each new building, certified by a registered surveyor, shall be submitted to the Engineer prior to the request for certificate of completion / certificate of occupancy from the City of Fort Lauderdale Building Department.

1.14 AUDIO-VISUAL PRECONSTRUCTION RECORD

A. General: Prior to commencing work, the Contractor shall have a continuous color audio-video recording taken of the entire Project, including adjacent work areas, plant site and all other areas that will be disturbed by the Contractor's operations, to serve as a record of preconstruction conditions. No construction shall begin prior to review and acceptance of the recordings covering the respective, affected construction area by the Engineer. The Engineer shall have the authority to reject all or any portion of the recording not conforming to the specifications and order that it be redone at no additional charge. The Contractor shall reschedule unacceptable coverage within five days after being notified. The Engineer shall designate those areas, if any, to be omitted from or added to the audio-video coverage. Recordings shall not be performed more than ninety days prior to construction in any area. Recording format shall be MP4 audio-video, minimum 1280 x 720 resolution, and playable using Windows Media Player. CDs and/or DVDs will not be accepted. All flash drives and written records shall become property of the City.

B. Services: The Contractor shall engage the services of a professional electrographer. The color recording shall be prepared by a responsible commercial firm known to be skilled and regularly engaged in the business of preconstruction color audio-video documentation. The electrographer shall furnish to the Engineer a list of all equipment to be used for the audio-video recording, i.e., manufacturer's name, model number, specifications and other pertinent information. Additional information to be furnished by the electrographer is the names and addresses of two references that the electrographer has performed color audio-video recordings for on projects of a similar nature within the last twelve months.

C. Equipment: All equipment, accessories, materials and labor to perform this service shall be furnished by the Contractor.

1. The total audio-video system shall reproduce bright, sharp, clear pictures with accurate colors and shall be free from distortion, tearing, rolls or any other form of imperfection. The audio portion of the recording shall reproduce the commentary of the camera operator with proper volume and clarity, and be free from distortion and interruptions.

2. When conventional wheeled vehicles are used, the distance from the camera lens to the ground shall not be less than twelve feet. In some instances, audio-video coverage may be required in areas not accessible by conventional wheeled vehicles. Such coverage shall be obtained by walking or special conveyance acceptable to the Engineer.

D. Recorded Information - Audio: Each recording shall begin with the current date, project name and municipality and be followed by the general location; i.e., process structure, or area, viewing side and direction of progress. The audio track shall consist of an original live recording. The recording shall contain the narrative commentary of the electrographer, recorded simultaneously with the electrographer fixed elevation video record of the zone of influence of construction.

E. Recorded Information - Video: All video recordings must, by electronic means, display continuously and simultaneously, generated with the actual recording, transparent digital information to include the date and time of recording. The date information shall contain the month, day and year. The time information shall contain the hours, minutes, and seconds. Additional information shall be displayed periodically. Such information shall include, but not be limited to, project name, process structure or area, and the viewing side. This transparent information shall appear on the extreme upper left hand third of the screen.

F. Conditions for Recording: All recording shall be done during times of good visibility. No recording shall be done during precipitation, mist or fog. The recording shall only be done when sufficient sunlight is present to properly illuminate the subjects of recordings and to produce bright, sharp video recordings of those subjects.

G. Video Coverage: Video coverage shall include all surface features located within the zone of influence of construction supported by appropriate audio coverage. Such coverage shall include, but not be limited to, existing driveways, sidewalks, curbs, pavement, landscaping, fences, signs and interior and exterior of existing structures affected by the work and the exteriors of structures adjacent to the work, and any other on-site area that will be occupied or impacted by the Contractor or any of their subcontractors or suppliers within the area covered.

1.15 PROJECT PHOTOGRAPHS

A. The Contractor shall engage and pay for the services of a photographer for ground level progress pictures each month during the course of the construction activities. The photographer's periodic visits and work shall be coordinated with the City. A total of 25 progress photographs in electronic format of completed work is required each month. A

photograph (picture) shall be defined as one image. Meta data shall include the following information:

1. Location
2. Name/number of structure
3. Photo Number
4. Date photgraph was taken
5. Description
6. Name of photographer
7. Owner's witness

B. Digital images of each photograph shall be submitted electronically to the Engineer with the Contractor's monthly estimate.

PART 2 -- PRODUCTS (NOT USED)

PART 3 -- EXECUTION (NOT USED)

EQUIPMENT LUBRICATION SCHEDULE			
EQUIPMENT ITEM:			
EQUIPMENT ID NO.:			
EQUIPMENT LOCATION:			
EQUIPMENT MANUFACTURER:			
ADDRESS:			
PHONE:			
SERVICE REPRESENTATIVE:			
ADDRESS:			
PHONE:			
MAINTENANCE REQUIREMENTS:			
Maintenance Operation	Frequency Running Time / Calendar	Lubricant	Description / Type / Special Tools

Page _____ of _____

NOTE: Use additional sheets as required

EQUIPMENT MAINTENANCE SCHEDULE			
EQUIPMENT ITEM:			
EQUIPMENT ID NO.:			
EQUIPMENT LOCATION:			
EQUIPMENT MANUFACTURER:			
ADDRESS:			
PHONE:			
SERVICE REPRESENTATIVE:			
ADDRESS:			
PHONE:			
MAINTENANCE REQUIREMENTS:			
Maintenance Operation	Frequency Running Time / Calendar	Lubricant	Description / Type / Special Tools

Page _____ of _____

NOTE: Use additional sheets as required.

- END OF SECTION -

SECTION 01312

FIELD ENGINEERING

PART 1 - GENERAL

1.01 REQUIREMENTS

A. Contractor shall provide and pay for field Engineering and Survey services required for the project.

B. Identify existing control points and property line corner stakes indicated on the Drawings, as required.

1.02 QUALIFICATIONS OF SURVEYOR

A. Qualified Registered Professional Surveyor & Mapper, acceptable to the City and the Engineer.

1.03 SURVEY REFERENCE POINTS

A. Location and elevation of benchmarks are shown on the Drawings. Identify basic horizontal and vertical control points for the construction project including:

1. Permanent coordinate reference points with horizontal and vertical control, located and staked as shown on the plans.

B. Contractor's Responsibilities:

1. Provide survey and layout required to layout the Work.

2. Check and establish exact location of existing facilities prior to construction of new facilities and any connections thereto.

3. In event of discrepancy in data or benchmarks, request clarification before proceeding with Work.

4. Retain professional land surveyor or civil engineer registered in state of Florida who shall perform or supervise engineering surveying necessary for construction staking and layout.

5. Maintain complete accurate log of survey Work as it progresses as a Record Document.

6. On request of City, submit documentation.

7. Provide competent employee(s), tools, stakes, and other equipment and materials as City may require to:

8. Establish control points, lines, and easement boundaries.

9. Check layout, survey, and measurement Work performed by others.

10. Measure quantities for payment purposes.

C. The Contractor shall locate and protect control points prior to starting site construction work and preserve all permanent reference points during construction.

1. Make no changes or relocations without prior written notice to City.

2. Report to Engineer when any reference point is lost or destroyed, or requires relocation because of necessary changes in grades or locations.

3. Contractor's surveyor shall replace project control points which may be lost or destroyed. Replacements shall be established based on original survey control.

D. Contractor shall be responsible for performing survey and preparing As-Built drawings for all other portions of the work in accordance with Section 01320 – Project Record Documents.

1.04 PROJECT SURVEY REQUIREMENTS

A. Contractor's surveyor shall establish a minimum of two permanent benchmarks on site, referenced to data established by survey control points.

B. Contractor shall establish lines and levels, locate and lay out, prepare a Horizontal and Vertical Control Plan for the purpose of construction staking by instrumentation and similar appropriate means:

1. Stakes for grading and fill placement.

2. Controlling lines and levels as required.

C. From time to time, verify layouts by same methods.

D. Horizontal and vertical control plan shall be made available to City in AutoCAD Civil 3D 2019 format or most current release.

E. Any plan released to the Contractor via electronic media is for as-built use only. They have not been geometrically calculated by a Surveyor. This applies to all aspects of the plans including, but not limited to, right-of-way, road utilities and drainage.

1.05 RECORDS

A. Maintain a complete, accurate log of all control and survey work as it progresses.

B. On completion of construction work, prepare a certified survey showing all dimensions, locations and elevations of project.

1.06 SUBMITTALS

A. Submit name and address of Professional Surveyor & Mapper and Professional Engineer to City and Engineer.

B. On request of City or Engineer, submit documentation to verify accuracy of field engineering work.

C. Submit certificate signed by Registered Engineer or Professional Surveyor & Mapper certifying that elevation and locations of work are in conformance, or non-conformance, with Contract Documents.

PART 2 - PRODUCTS

(NOT USED)

PART 3 - EXECUTION

(NOT USED)

- END OF SECTION -

SECTION 01320

PROJECT RECORD DOCUMENTS

PART 1 - GENERAL

1.01 THE REQUIREMENT

A. The Contractor shall submit Project Record Documents, including As-Builts and As-Built GIS Database updates as specified herein.

B. Maintain at the site of the City a record copy of:

1. Drawings
2. Specifications
3. Approved Permit Documents (Environmental, Stormwater, Tree & FDOT Right of Way Permits)
4. Addenda
5. Change Orders and other modifications to the Contract
6. Approved Shop Drawings, Product Data and Samples
7. Field Test Records
8. Stormwater Pollution Prevention Plan (SWPPP)

1.02 MAINTENANCE OF DOCUMENTS AND SAMPLES

A. Store documents and samples in Contractor's field office apart from documents used for construction:

1. Provide files and racks for storage of documents.
2. Provide locked cabinet or secure storage space for storage of samples.

B. File documents and samples in accordance with CSI format.

C. Maintain documents in a clean, dry, legible condition and in good order. Do not use record documents for construction purposes.

D. Make documents and samples available at all times for inspection by City and City Project Manager.

1.03 MARKING DEVICES

A. Provide felt tip marking pens for recording information in the color code designated by Engineer.

1.04 RECORDING

A. Label each document, "PROJECT RECORD" in neat large printed letters, or by rubber stamp.

B. Record information concurrently with construction progress. Do not conceal any work until required information is recorded.

C. Drawings: Legibly mark to record actual construction: (hard copy and ACAD format)

1. Horizontal and vertical locations of underground utilities and appurtenances, referenced to permanent surface improvements.

2. Location of internal utilities and appurtenances concealed in the construction, referenced to visible and accessible features of the structure.

3. Field changes of dimension and detail.

4. Changes made by Field Order or by Change Order.

5. Details not on original Contract Drawings.

D. Specifications and Addenda; Legibly mark each Section to record:

1. Manufacturer, trade name, catalog number, and supplier of each produce and item of equipment actually installed.

2. Changes made by Field Order or by Change Order.

1.05 AS-BUILT AND RECORD DRAWINGS

A. The term ‘As-Built Drawing’ refers to drawings signed and sealed by a Florida registered surveyor and mapper (PSM) provided by the Contractor. As-built information will be provided to the Engineer of Record for review. Contractor will prepare record drawings based on as-built information.

B. The as-built drawings cover sheet will be signed, sealed and dated by the PSM. The cover sheet will include the PSM’s name, business name, PSM number, address and telephone number and contain the following statement:

> “I hereby certify that the as-built location information of the potable water, reclaimed water, wastewater and drainage facilities shown on these drawings conforms to the minimum technical standards for land surveying in the State of Florida, Chapter 5J-17.050(10)(i) (Florida Administrative Code), as adopted by the Department of Agriculture and Consumer Services, Board of Professional Surveyors and Mappers, and that said as-builts are true and correct to the best of our knowledge and belief.”

C. As-builts will contain the information on the design drawings, plus the following additional requirements:

1. As-builts are to document changes between the design and construction. All information that is incorrect due to changes during construction will be corrected. Incorrect or no longer relevant information will be erased or struck through. Any facilities constructed in a horizontal or vertical location materially different (one-tenth foot horizontal, one-tenth foot vertical) than the design location will have their design location struck through and will be redrafted at the constructed location. Design drawing dimensioning to water and wastewater facilities will be corrected as necessary.

2. Drawings will be a complete set including cover sheet, index (if one was included in the approved design drawings) and any other sheets included in the approved design set. Standard detail sheets are not necessary.

3. Drawings will include the Minimum As-Built and Record Drawing Contents described in the City of Fort Lauderdale minimum standards.

D. The Contractor shall maintain full size (24"x36" or 22”x34”) field drawings to reflect the "as-built" items of Work as the Work progresses. Upon completion of the work the Contractor shall prepare a record set of "AS-BUILT" Drawings on full-size, reproducible material and an electronic file in .DWG format (AutoCAD, latest Version). One set of full size design Drawings on reproducible material will be furnished to the Contractor by the design Engineer at the current square foot price. An electronic file of the design Drawings will be furnished to the Contractor by the Engineer at no additional cost (for as-built purposes only). No additional payment will be made for those "as-built" Drawings.

E. The cost of maintaining record changes, and preparation of the AS-BUILT Drawings shall be included in the unit prices bid for the affected items. Upon completion of the Work, the Contractor shall furnish the City Project Manager the reproducible AS-BUILT Drawings and electronic files. The completed AS-BUILT Drawings shall be delivered to the City Project Manager at least 48 hours prior to final inspection of the Work. The Final Inspection will not be conducted unless the AS-BUILT Drawings are in the possession of the City Project Manager.

F. The completed As-Built Drawings shall be certified by a Professional Surveyor and Mapper registered in the State of Florida. This certification shall consist of the surveyor's embossed seal bearing the registration number, the surveyor's signature and date on each sheet of the drawing set. In addition, the key sheet, cover sheet or first sheet of the plans set shall list the business address and telephone number of the surveyor. The final as-builts shall also be submitted using state plane coordinates. (NAVD 1988 for vertical; NAD '83 with '90 adjustment for horizontal).

G. Representative items of Work that should be shown on the record Drawings as verified, changed or added are shown below:

1. <u>Plans:</u>

   a. Structure types, location with grade of rim and flow-line elevations.

   b. Pipe type, length, size and elevations.

   c. Utility type, length, size and elevation in conflict structures.

d. All maintenance access structures, valves and hydrants within right-of-way.

e. Spot (critical) elevations at plateaued intersections. (P.C., P.T., and mid point of all intersections, etc.)

f. Sewer laterals shall be stationed between maintenance access structures.

2. Pavement Marking and Signing Plans: Sign location where installed if different from plans.

3. Water and Sewer Plans: Location (horizontal and vertical) of all pipe lines, structures, fittings, services, valves and appurtenances, and water main / sanitary sewer pipe crossings.

H. The Contractor shall submit an electronic set of progress As-Built Drawings with each application for payment. These Drawings shall accurately depict the Work completed and for which payment is being requested.

I. The term 'Record Drawing' refers to the final drawing set signed and sealed by the Engineer of Record. The Engineer of Record will prepare or have prepared record drawings based on as-built information provided by the PSM and from information provided by the Engineer's staff. The Engineer of Record shall retain the signed and sealed 'as-built' drawings provided by the PSM with the other project records for possible review by City upon request. Record Drawings shall meet the requirements of the Contract Documents.

J. As-Built and Record Drawings shall include the following contents at a minimum.

1. The amount of information required on as-built and record drawings will require the drawing author to organize its presentation in order to make the drawings readable. On occasion, it may be necessary to put stormwater, water, and wastewater information on separate sheets, and/or use a table to show coordinate information.

2. Show the location of easements used by the stormwater, water, and wastewater facilities.

3. Indicate pipe joint locations where stormwater, water, wastewater or reclaimed water piping crosses.

4. Indicate the length of gravity stormwater and wastewater piping and actual slope between manhole centers.

5. Show all abandoned in place facilities including the extent and method of abandonment.

6. Show elevations to the nearest tenth of a foot for:

a. Top of pipe for elevations at vertical deflection points and every 200 feet along straight runs.

b. Top of pipe of stormwater, water, or wastewater facilities where they cross all other facilities (drainage, telephone, cable TV, electric, etc.)

7. Show elevations to the nearest one hundredth of a foot for:

a. Manholes (MH) rims.

b. Inverts of every gravity wastewater and stormwater pipe and force main connections to MH.

c. Lift station top of slab, bottom of wet well, influent pipe invert and control set points.

8. Coordinates will be provided for City maintained facilities, including:

a. Water mains, force mains and reclaimed water mains at deflection points and every 200 feet along straight runs.

b. The center of each MH, fitting, valve, blow off, hydrant, water meter box, wastewater cleanout, lift station wetwell, double detector check or other non-pipe water or wastewater facility.

c. The location of each connection to existing facilities.

d. The corners (vertices) of all easements being granted to the City as a part of the project.

e. Other locations designated by City.

9. Show the changed location of any non-water/wastewater/stormwater features so they are at the visually correct location relative to City maintained facilities.

10. Drawings shall include color photographs of all connections to existing City infrastructure as well as all critical utility crossings and where specifically required on the design drawings. The pictures will be taken with a GPS camera that automatically geotags the picture. A maximum of six photographs per sheet is acceptable. Each photograph shall have a minimum size of 8”x10”. Photographs shall have a density of 3.0 megapixel or greater. Plot resolution is to be minimum 300 dots per inch. Photographs shall normally be taken from a point between four feet (4’) and six feet (6’) above the subject infrastructure and shall show good detail in both shadow and sunlit areas. Include a measuring device in the photo for scale and where applicable to indicate the depth or separation of the utilities. A symbol (i.e. an arrow) is to be used in the plan views indicating the location and direction of view for each photograph submitted. The symbol must include the photograph number. A caption under each photograph shall include the following information:

a. Photograph number

b. Photograph description

c. Date of photograph

d. Location and direction of view (for example 201 NW 34 Street looking North)

e. State plane coordinates

f. All photographs included in the drawings will also be provided to City in JPEG format on CD or DVD media. The CD or DVD will be labeled with the City project name and number. Individual photo files will be named using the same photograph number contained in the drawings.

11. The size and material of the piping shall be verified by the survey crew at the time of as-built.

12. As-builts of all drainage lines shall include the following information:

a. Rims, inverts, length of piping between structures, length of exfiltration trench, and weir elevations if applicable.

b. The size and material of the piping shall be verified by the survey crew at the time of as-built.

13. As-builts for the edge of pavement and sidewalk locations shall include horizontal locations and shall indicate all deviations from the design plans.

14. All rock as-builts for parking lot, roadways and swales areas shall consist of the following:

a. Rock elevations at all high and low points, and at enough intermediate points to confirm slope consistency and every 50' for roadways.

b. Rock as-builts shall be taken at all locations where there is a finish grade elevation shown on the design plans.

c. All catch basin and maintenance access structure rim elevations shall be shown.

d. Elevations around island areas will also be required.

e. As-builts shall be taken on all paved and unpaved swales prior to placement of asphalt and/or topsoil/sod, at enough intermediate points to confirm slope consistency and conformance to the plan details.

f. Note: Rock as-builts required prior to paving. Engineer shall review rock as-builts within five days of receipt.

15. Lake and canal bank as-builts shall include a key sheet of the lake for the location of cross sections. Lake and canal bank cross sections shall be plotted at a minimum of every 100 lf, unless otherwise specified. As-builts shall consist of

the location and elevation of the top of bank, edge of water and the deep cut line, with the distance between each shown on the drawing.

16. Retention area as-built elevations shall be taken at the bottom of the retention area and at the top of bank. If there are contours indicated on the design plans, then they shall be as-built as well.

17. If a change is made via field order or deviation to any structure, pipeline, etc., a new location shall be noted on the as-builts. The City Project Manager may request additional as-built information to verify horizontal or vertical locations.

1.06 AS BUILT GIS DATABASE REQUIREMENTS

A. The Contractor shall submit updates to the City's GIS database cataloging the constructed stormwater infrastructure. Updates shall be in accordance with the City's latest geodatabase and corresponding Geodatabase Data Dictionary. The Geodatabase Data Dictionary is provided as an attachment to this specification.

B. Contractor shall enter location and attribute information collected from survey field work and final As-Built Drawings into a City issued geodatabase template. The City shall provide a template in Microsoft Excel format to be used for data entry. This template will adhere to the City's geodatabase schema for feature classes, related tables, and domain tables. The asset types to be collected and delivered shall include, but not limited to the following assets:

1. Control valves

2. Exfiltration trenches

3. Gravity mains

4. Pressurized mains

5. Inlets

6. Manholes

7. Network structures (including pump stations or pipe ends)

8. Inline valves

9. Outfalls

C. Attribute types shall be coordinated with the City, but shall adhere to the requirements of the City's Geodatabase Data Dictionary.

1.07 SUBMITTAL

A. Submittals of final As-Built Drawings shall be made with monthly payment applications and at the completion of the entire project. At Contract closeout, deliver all Record Documents to City Project Manager, for presentation to the City.

B. A complete set of As-Built Drawings shall be prepared and delivered to the City Project Manager. Work shall be performed by a Registered Professional Surveyor and Mapper shall include, but not be limited to the following:

1. Valve boxes, splice boxes, pull boxes, all underground utilities-waterlines, electrical runs, irrigation system, storm drainage pipe and structures, sanitary sewer lines and structures, finished necessary grades, benches, curbs, fences, walls, signs, light fixtures and other items as necessary in accordance with City Record Plan/As-built plan requirements.

C. Submittal of the draft As-Built GIS Database shall be done electronically. The Engineer will review the Excel file for completeness. The City shall provide written comments on the submittal. The Contractor shall provide a written response for each comment. The Contractor shall make revisions to the Excel file and submit both the responses to the comments and the revised database file for review by the Engineer and the City. Should further modifications of GIS database file be required, the Contractor shall make these modifications at no additional cost to the City.

D. Accompany all submittals with transmittal letters in duplicate, containing:

1. Date.

2. Project title and number.

3. Contractor's name and address.

4. Title and number of each Record Document.

5. Signature of Contractor or authorized representative.

PART 2 - PRODUCTS

(NOT USED)

PART 3 - EXECUTION

(NOT USED)

- END OF SECTION -

SECTION 01400

QUALITY CONTROL

PART 1 - GENERAL

1.01 THE REQUIREMENT

A. Testing Laboratory Services

1. Laboratory testing and checking and all certifications required by the Specifications, including the cost of transporting all samples and test specimens, shall be provided by the Contractor unless otherwise indicated in the Specifications. Payment for laboratory services shall be made from the Allowance item entitled “Laboratory Testing Fees”. Payment shall be made based on the actual cost of service upon submission of paid invoices.

2. The Contractor shall retain the services of an independent, certified testing laboratory to perform all testing required by the Contract Documents and by permitting agencies. The Contractor shall submit the name of the testing laboratory and evidence of all appropriate certifications for approval by the Engineer and the City.

2. In the case of a conflict between this Specification Section and the Contractor’s Quality Management Plan, the more stringent requirement between the two documents shall govern.

3. Procedure

   a. The Contractor shall plan and conduct his operations to permit taking of field samples and test specimens, as required, and to allow adequate time for laboratory tests.

   b. The collection, field preparation and storage of field samples and test specimens shall be performed by the Contractor as required by the Specifications and as directed by the City.

4. Supplementary and Other Testing

   a. Nothing shall restrict the Contractor from conducting tests he may require. Should the Contractor at any time request the City to consider such test results, the test reports shall be certified by an independent testing laboratory acceptable to the City. Testing of this nature shall be conducted at no additional cost to the City.

1.02 OBSERVATION AT PLACE OF MANUFACTURE

A. Unless otherwise specified, all products, materials, and time and equipment shall be subject to observation by the Engineer at the place of manufacture.

B. The presence of the Engineer at the place of manufacture however, shall not relieve the Contractor of the responsibility for furnishing products, materials, and equipment which comply with all requirements of the Contract Documents. Compliance is a duty of the Contractor, and said duty shall not be avoided by any act or omission on the part of the Engineer.

1.03 SAMPLING AND TESTING

A. Unless otherwise specified, all sampling and testing shall be in accordance with the methods prescribed in the current standards of the ASTM, as applicable to the class and nature of the article or materials considered; however, the City reserves the right to use any generally-accepted system of sampling and testing which, in the opinion of the Engineer, will ensure the City that the quality of the work is in full accord with the Contract Documents.

B. Any waiver by the City of any specific testing or other quality assurance measures, whether or not such waiver is accompanied by a guarantee of substantial performance as a relief from the specified testing or other quality assurance requirements as originally specified, and whether or not such guarantee is accompanied by a performance bond to assure execution of any necessary corrective or remedial Work, shall not be construed as a waiver of any requirements of the Contract Documents.

C. Notwithstanding the existence of such waiver, the Engineer reserves the right to make independent investigations and tests and failure of any portion of the Work to meet any of the requirements of the Contract Documents, shall be reasonable cause for the Engineer to require the removal or correction and reconstruction of any such Work in accordance with the General Conditions.

D. Materials to be tested include, but are not necessarily limited to the following:

1. cement,
2. concrete aggregate,
3. concrete,
4. bituminous paving materials,
5. structural and reinforcing steel,
6. waterproofing,
7. select backfill, subgrade, base material, crushed stone or gravel and sand,
8. water during pipeline disinfection and bacteriological testing

1.04 SITE INVESTIGATION AND CONTROL

A. The Contractor shall verify all dimensions in the field and shall check field conditions continuously during construction. The Contractor shall be solely responsible for any inaccuracies built into the Work due to its failure to comply with this requirement.

B. The Contractor shall inspect related and appurtenant Work and shall report in writing to the Engineer any conditions which will prevent proper completion of the Work. Failure to report any such conditions shall constitute acceptance of all site conditions, and any required removal, repair, or replacement caused by unsuitable conditions shall be performed by the Contractor within the scope of the Project.

1.05 OBSERVATION AND TESTING

A. The work or actions of the testing laboratory shall in no way relieve the Contractor of its obligations under the Contract. The laboratory testing work will include such observations and testing required by the Contract Documents, existing laws, codes, ordinances, etc. The testing laboratory will have no authority to change the requirements of the Contract Documents, nor perform, accept or approve any of the Contractor's Work.

B. The Contractor shall allow the Engineer ample time and opportunity for field observation and testing materials and equipment to be used in the Work. The Contractor shall advise the Engineer promptly upon placing orders for materials and equipment so that arrangements may be made, if desired, for observation before shipment from the place of manufacture. The Contractor shall at all times furnish the Engineer and its representatives, facilities including labor, and allow proper time for inspecting and testing materials, equipment, and installation. The Contractor must anticipate that possible delays may occur in the execution of its work due to the necessity of materials and equipment being inspected and accepted for use. The Contractor shall furnish, at its own expense, all samples of materials required by the Engineer for testing, and shall make its own arrangements for providing water, electric power, or fuel for the various observations and tests of structures and equipment.

C. The Contractor shall furnish the services of representatives of the manufacturers of certain equipment, as prescribed in other Sections of the Specifications. The Contractor shall also place his orders for such equipment on the basis that, after the equipment has been tested prior to final acceptance of the work, the manufacturer will furnish the City with certified statements that the equipment has been installed properly and is ready to be placed in functional operation. Tests and analyses required of equipment shall be paid for by the Contractor, unless specified otherwise in the Section which covers a particular piece of equipment.

D. Where other tests or analyses are specifically required in other Sections of these Specifications, the cost thereof shall be borne by the party (City or Contractor) so designated in such Sections. The City will bear the cost of all tests, observations, or investigations undertaken by the order of the Engineer for the purpose of determining conformance with the Contract Documents if such tests, observations, or investigations are not specifically required by the Contract Documents, and if conformance is ascertained thereby. Whenever nonconformance is determined by the Engineer as a result of such tests, observations, or investigations, the Contractor shall bear the full cost thereof or shall reimburse the City for said cost. In this connection, the cost of any additional tests and investigations, which are ordered by the Engineer to ascertain subsequent conformance with the Contract Documents, shall be borne by the Contractor.

E. Significance of Tests

1. Test results shall be binding on both the Contractor and the City, and shall be considered irrefutable evidence of compliance or noncompliance with the Specification requirements, unless supplementary testing shall prove, to the satisfaction of the City, that the initial samples were not representative of actual conditions.

F. Supplementary and Other Testing

1. Nothing shall restrict the Contractor from conducting tests he may require. Should the Contractor at any time request the City to consider such test results, the test reports shall be certified by an independent testing laboratory acceptable to the City. Testing of this nature shall be conducted at the Contractor's expense.

1.06 RIGHT OF REJECTION, IMPERFECT WORK, EQUIPMENT, OR MATERIALS

A. The Engineer, acting for the City, shall have the right, at all times and places, to reject any articles or materials to be furnished hereunder which, in any respect, fail to meet the requirements of the Contract Documents, regardless of whether the defects in such articles or materials are detected at the point of manufacture or after completion of the Work at the site, or during the subsequent guarantee period. If the Engineer or its representative, through an oversight or otherwise, has accepted materials or Work which is defective, or which is contrary to the Contract Documents, such materials, no matter in what stage or condition of manufacture, delivery, or erection, may be subsequently rejected by the Engineer for the City. Any defective or imperfect work, equipment, or materials furnished by the Contractor which is discovered shall be removed immediately even though it may have been overlooked by the Engineer and estimated for payment. Satisfactory work or materials shall be substituted for that rejected.

B. The Contractor shall promptly remove rejected articles or materials from the site of the Work after notification of rejection. All costs of removal and replacement of rejected articles or materials as specified herein shall be borne by the Contractor.

C. The Engineer may order tests of imperfect or damaged work, equipment, or materials to determine the required functional capability for possible acceptance, if there is no other reason for rejection. The cost of such tests shall be borne by the Contractor; and the nature, tester, extent and supervision of the tests will be as determined by the Engineer. If the results of the tests indicate that the required functional capability of the work, equipment, or material was not impaired, consistent with the final general appearance of same, the work, equipment, or materials may be deemed acceptable. If the results of such tests reveal that the required functional capability of the questionable work, equipment, or materials has been impaired, then such work, equipment, or materials shall be deemed imperfect and shall be replaced. The Contractor may elect to replace the imperfect work, equipment, or material in lieu of performing the tests.

1.07 OTHER CONSTRUCTION CONSIDERATIONS

A. Sleeves and Openings: The Contractor shall provide all openings, chases, etc., to fit its own work and that of any other subcontractors and Contractor's. All such openings or chases shown on the Contract Drawings, or reasonably implied thereby, or as confirmed

or modified by acceptable shop, setting or erecting drawings, shall be provided by the Contractor.

B. Where pipes or conduits are to pass through slabs or walls, or where equipment frames or supports are to be installed as integral part of an opening, the sleeves, openings, forms or frames shall be furnished by the installer of the pipes, conduits or equipment, but shall be placed by the Contractor. Where hanger inserts, anchor bolts and similar items are to be embedded in concrete as an integral part of a slab or wall, they shall be furnished by the installer of the pipe or other equipment requiring the hanger, etc., but shall be placed by the Contractor.

C. Weather Conditions: Work that may be affected by inclement weather shall be suspended until proper conditions prevail. In the event of impending storms, the Contractor shall take necessary precautions to protect all work, materials and equipment from exposure.

D. Fire Protection: The Contractor shall take all necessary precautions to prevent fires at or adjacent to the Work, including its own buildings and trailers. Adequate fire extinguisher and hose line stations shall be provided throughout the work area.

PART 2 - PRODUCTS (NOT USED)

PART 3 - EXECUTION

3.01 BUOYANCY

A. The Contractor shall be completely responsible for any tanks, pipelines, utility access, foundations or similar improvements that may become buoyant during the construction operations due to groundwater levels. Should there be any possibility of buoyancy, the Contractor shall take the necessary steps to prevent damage due to floating or flooding, and shall repair or replace said improvements at no additional cost to the City.

- END OF SECTION -

SECTION 01510

TEMPORARY UTILITIES

PART 1 -- GENERAL

1.01 THE REQUIREMENT

A. It shall be the CONTRACTOR's responsibility to provide equipment that is adequate for the performance of the Work under this Contract within the time specified. All equipment shall be kept in satisfactory operating condition, shall be capable of safely and efficiently performing the required Work, and shall be subject to review by the City's representative at any time within the duration of the Contract. All Work hereunder shall conform to the applicable requirements of the OSHA Standards for Construction.

B. The CONTRACTOR shall provide for utilities and services for its own operations. The CONTRACTOR shall furnish, install and maintain all temporary utilities during the contract period including removal upon completion of the Work.

C. The CONTRACTOR shall provide temporary facilities as specified in the Construction Constraints section.

1.02 POWER AND LIGHTING

A. Power: The CONTRACTOR shall provide all necessary power required for its operations under the Contract, and shall provide and maintain all temporary power lines required to perform the Work in a safe and satisfactory manner.

B. Construction Lighting: All Work conducted at night or under conditions of deficient daylight shall be suitably lighted to ensure proper Work and to afford adequate facilities for inspection and safe working conditions. Temporary lighting shall be maintained during nonworking periods if the area is subject to access by the public or City's personnel.

C. Electrical Connections: All temporary connections for electricity shall be subject to review by the ENGINEER and the power company representative, and shall be removed in like manner at the CONTRACTOR's expense prior to final acceptance of the Work.

D. Separation of Circuits: Unless otherwise permitted by the ENGINEER, circuits separate from lighting circuits shall be used for all power purposes.

E. Construction Wiring: All wiring for temporary electric light and power shall be properly installed and maintained and shall be securely fastened in place. All electrical facilities shall conform to the requirements of Subpart K of the OSHA Safety and Health Standards for Construction.

1.03 WATER SUPPLY

A. General: Except as noted otherwise, the CONTRACTOR shall make arrangements for and pay for all costs for all water used during construction including general construction used, testing, CONTRACTOR's trailer and ENGINEER's trailer. The CONTRACTOR shall provide and maintain all piping, fittings, adapters, and valving as may be required.

B. If a temporary connection is made to a potable water system on-site (e.g., a fire hydrant), the CONTRACTOR must install a back flow prevention device and a meter, obtained from the City. The CONTRACTOR shall provide temporary piping for the metering and use of potable water. The cost of the water for the testing will be charged to the CONTRACTOR at the standard City rates including deposits, monthly charges and usage charges.

C. Water Connections: The CONTRACTOR shall not make connection to, or draw water from, any fire hydrant or pipeline without first obtaining permission of the authority having jurisdiction over the use of said fire hydrant or pipeline and from the agency owning the affected water system. For each such connection made, the CONTRACTOR shall first attach to the fire hydrant or pipeline a valve and a meter, if required by the said authority, of a size and type acceptable to said authority and agency.

D. Removal of Water Connections: Before final acceptance of the Work on the project, all temporary connections and piping installed by the CONTRACTOR shall be entirely removed, and all affected improvements shall be restored to their original condition, or better, to the satisfaction of the ENGINEER and to the agency owning the affected utility.

E. Fire Protection: The construction, and all other parts of the Work shall be connected with the CONTRACTOR's water supply system and shall be adequately protected against damage by fire. Hose connections and hose, water casks, chemical equipment, or other sufficient means shall be provided for fighting fires in the temporary structures and other portions of the Work, and responsible persons shall be designated and instructed in the operation of such fire apparatus so as to prevent or minimize the hazard of fire. The CONTRACTOR's fire protection program shall conform to the requirements of Subpart F of the OSHA Standards for Construction and all local Fire Department Requirements.

1.04 TEMPORARY SANITARY FACILITIES

A. The CONTRACTOR shall provide and maintain adequate and clean sanitary facilities for the construction work force and visitors. The facilities shall comply with local codes and regulations and be situated in an acceptable location.

1.05 CONFINED SPACES

A. The CONTRACTOR shall provide and maintain a safe working environment in confined spaces. The CONTRACTOR shall follow the applicable requirements of the OSHA Standards for Construction and NIOSH Publications for working in confined spaces.

1.06 TEMPORARY VENTILATION

A. The CONTRACTOR shall provide and maintain adequate ventilation for a safe working environment. In addition, forced air ventilation shall be provided for the curing of installed materials, humidity control and the prevention of hazardous accumulations of dust, gases or vapors.

PART 2 -- PRODUCTS (NOT USED)

PART 3 -- EXECUTION (NOT USED)

- END OF SECTION -

SECTION 01520

CONSTRUCTION CONSTRAINTS

PART 1 - GENERAL

1.01 THE REQUIREMENT

A. The intent of this Section is to outline the minimum requirements necessary to provide continuous public services throughout the construction period.

B. Work under the Contract shall be scheduled and performed in such a manner as to result in the least possible disruption to the operation of existing water, wastewater, and stormwater transmission facilities and nearby residents.

C. The Contractor has the option of providing additional temporary facilities that can eliminate a constraint, provided it is done without cost to the City (including additional City labor) and provided that all requirements of these Specifications are fulfilled. Work not specifically covered in the following paragraphs may, in general, be done at any time during the contract period, subject to the operating requirements and constraints and construction requirements outlined hereinafter. All references to days in this Section shall be consecutive calendar days.

1.02 CONNECTION OF EXISTING SYSTEMS

A. All connections to existing systems shall be performed in such a manner that no damage and minimal interruption is caused to the existing installation. Any damage caused to existing installations shall be repaired or replaced by the Contractor at no additional cost to the City.

B. The Contractor shall note that some of the work in this Contract will require the Contractor to connect to existing pipelines and structures. The Contractor shall be responsible for the proper containment and disposal of wastewater, or other materials drained from existing pipelines and structures during construction, unless otherwise specifically noted to be performed by the City.

C. The Contractor shall contain such wastewater or other materials (in accordance with all applicable codes) and shall dispose of such within the existing collection system as approved by the City. The Contractor shall be responsible for the prevention of wastewater or other material spills within the Work.

1.03 OPERATION REQUIREMENTS

A. Coordination with Private Property Owners: Stormwater work is located in City of Fort Lauderdale right-of-way areas. Work is also adjacent to private residences and public access areas. The Contractor shall coordinate work with the City and shall minimize impacts to private property owners and public access areas. Contractor shall replace surrounding ground affected including but not limited to pavers, sidewalks, sod, landscape and bring it to original or better conditions. Sequence of certain major events and identification of time constraints for removing existing facilities from active service and installation of new facilities are described below. No phase of work (or tasks within a phase)

shall preclude or be performed in parallel with a subsequent phase unless specifically defined so in these documents. In all cases, work in each phase shall be checked out an accepted for satisfactory use, subject to the City's approval, prior to the Contractor proceeding to the next phase of construction.

B. Critical events in the sequence of construction are specified herein. The outlined sequence of construction does not include all items necessary to complete the Work, but is intended to identify the sequence of critical events necessary to eliminate disruption to the public and to the City's facilities. It shall be understood by the Contractor that the critical events identified are not all inclusive and that additional items of work not shown may be required. The sequence of construction is a precedence requirement and does not attempt to schedule the Contractor's work.

1.04 SEQUENCE OF CONSTRUCTION

A. Mobilization / Site Preparation

1. Mobilize for work – video roadways, swales and adjacent area, obtain permits, develop and submit construction schedule, submit shop drawing schedule and being shop drawing submittals and procurement of materials.

2. For interfering utilities, construct new utilities up to tie-in points, perform tests, make final connections with minimum amount of shut down time. After acceptance of new utilities, remove existing interfering underground utilities and structures. Provide temporary services as required to maintain continuous operation.

i. Upon the Contractor's initial mobilization, the Contractor shall provide a 24" HDPE temporary bypass pipe (24" HDPE) and connect to the existing catch basin located on the west side of the preserve area to maintain the stormwater connection for the preserve area to the outfall into the New River. Prior to removal of existing headwall & drainage structure located near the proposed pump station location in the northwest area of the Preserve.

B. During installation of the proposed 72" RCP from Structure S74 & S75, the contractor shall install a 24" single wall HDPE pipe under the proposed 72" RCP to maintain the temporary bypass connection until final Certification and Acceptance of the pump station and final inlet tie-in into the 72" RCP is installed. After certification and acceptance of new pump station by City, the Contractor shall plug the south invert of S482 and grout fill the temporary 24" by-pass piping from Structure S482 to S361.Detailed Construction

1. Project Notification shall be performed in accordance with the requirements of Section 01580.

2. The Contractor shall be responsible for all damages/claims resulting from its activities on the surrounding neighborhood and its residents.

C. All work in the Preserve in the vicinity of the pump station from the west plug to Structure S379 and from the east plug to Structure S73, including temporary bypass drainage (1.04 B) must be furnished, installed and completed within six (6) months of the Notice to Proceed. All work must be approved by Engineer and City prior to the six (6) month deadline. The remainder of the pipe and associated work within the Preserve shall be

completed prior to the completion of the pump station. Contractor is responsible for coordination of all entities involved in the work within the Preserve.

D. Final Site Work and Closeout

1. Final grading, paving, sodding, landscaping, miscellaneous work, demobilization and related closeout activities shall be as defined elsewhere in the Contract Documents.

1.05 CONSTRUCTION CONSTRAINTS

A. Construction Dewatering

1. All dewatering equipment such as pumps, air compressors, generators, etc. proposed for use during construction in residential areas shall be provided with noise enclosures suitable to meet the requirements of the City of Fort Lauderdale Noise Ordinance, whichever is more stringent.

2. The Contractor is responsible for draining and dewatering all existing utilities impacted by the work as required to complete the relocation, demolition, bypass, or tie-in connections. Contractor is responsible for disposal of the contents of each line.

3. Additional requirements for construction dewatering are defined on the Drawings.

B. Work in City of Fort Lauderdale Right-of-Way

1. Contractor shall coordinate with City of Fort Lauderdale Engineering Department prior to start of restoration.

2. Contractor shall not begin new construction on the next section of roadway until the previous roadway is significantly complete. A roadway shall be considered significantly complete when all work is complete including the first lift of asphalt. The milling of the roadway and placement of the final lift of asphalt, final striping, and landscape restoration shall be done at the end of the project.

3. Construction within the right-of-way of affected roads shall be scheduled so that all improvements are completed at once, and the residents are only disrupted for one time period. This excludes water or sewer plumbing work outside the roadway which shall be scheduled after mains are tested and accepted for connection by individual services.

4. At any time, the entire length of the project area shall remain unobstructed and open to through traffic for each section. Access for emergency vehicles shall be maintained at all times to all homes and businesses. Excavation must be backfilled or barricaded at the end of each work day to prevent hazardous conditions. If a trench, excavation, or structure is to be left open, it must be covered with a steel plate and barricaded at the end of each work day or when work will be suspended for more than eight (8) hours.

5. Transportation provisions for handicapped or disabled residents shall be made by the Contractor if construction temporarily prevents access to homes. Constant access shall be provided for residents on the Special Needs List.

6. The Contractor shall also make provisions with local bus, school bus, garbage collection, mail delivery, and other agencies for continuation of service. A traffic maintenance plan indicating detours, schedules, and alternate routes which has been approved by the Engineer, the City, and Broward County Traffic Engineering Division shall be submitted to all affected agencies for coordination and routing purposes.

7. Pipe and material shall not be strung out along installation routes for longer than two (2) weeks prior to installation.

8. A safe walk route for all schools within the vicinity of the construction zone shall be maintained during the arrival and dismissal of school. Contractor shall not block bus access to schools during school hours.

C. Maintenance of Existing Facilities

1. It may be necessary to interrupt the operation of the existing water and/or sewer system. In all cases where the Contractor must cause an interruption, the Contractor shall prepare and submit to the Engineer seven (7) working days prior to commencing work, a complete description of the proposed procedure and a guaranteed time schedule. At least 24 hours prior to the time proposed for starting the Work, the Contractor will be notified by the Engineer whether or not the Work will be permitted as proposed.

2. The Engineer reserves the right to require the Contractor to work 24 hours per day in all cases where interference with operation of the system may result in dangerous health hazards or offensive conditions.

3. In no case will the Contractor be permitted to interfere with the existing system until all materials, supplies, equipment, tools and incidentals necessary to complete the work are on site. Backup equipment and/or materials on key items shall be required on work necessitating interference with the existing system.

4. The Contractor shall be responsible for draining and dewatering existing utilities as required to complete tie-in activities. The Contractor is responsible for the disposal of contents of the line(s) in accordance with all federal, state, and local regulations.

PART 2 - PRODUCTS

(NOT USED)

PART 3 - EXECUTION

3.01 COORDINATION WITH EXISTING UTILITIES AND OTHER AGENCIES

A. The Contractor shall notify all utilities in writing with a copy to the City/Engineer prior to construction commencement. The Contractor shall cooperate with these utility owners as necessary to minimize service interruptions.

- END OF SECTION -

SECTION 01525

MAINTENANCE OF TRAFFIC

PART 1 - GENERAL

1.01 GENERAL

A. The Contractor shall maintain pedestrian and vehicular traffic within the limits of the projects for the duration of the construction period, including any temporary suspensions of the work, construct and maintain detours, provide facilities for access to adjacent residences, schools, bus pick up and drop off locations, common grounds, businesses, etc., along the project, furnish, install and maintain traffic control and safety devices during construction, furnish and install work zone pavement markings for maintenance of traffic in construction areas and provide any other special requirements for safe and expeditious movement of pedestrian and vehicular traffic in accordance with the Contract Documents. Maintenance of Traffic includes all facilities, devices and operations as required for safety and convenience of the public within the work zones, and shall include provisions for pedestrian, residential, and school student traffic as well as vehicular traffic.

The Contractor shall not maintain traffic over those portions of the project where no work is to be accomplished or where construction operations will not affect existing roads. Do not obstruct or create a hazard to any traffic during the performance of the work, and repair any damage to existing pavement open to traffic.

B. Beginning Date of Contractor's Responsibility: The Contractor shall maintain traffic starting the day work begins on the project. No work shall commence without approved and constructed Traffic Control Plans in place.

C. Worksite Traffic Supervisor: The Contractor shall provide a Worksite Traffic Supervisor. Requirements are as follows:

1. Ensure that the Worksite Traffic Supervisor is available on a 24-hour per day basis, participates in all changes to traffic control and reviews the project on a day-to-day basis.

2. Ensure that the Worksite Traffic Supervisor is present to direct the initial setup of the traffic control plan and any changes. Provide the Worksite Traffic Supervisor with all equipment and materials needed to set up, and maintain traffic control and handle traffic-related situations.

3. Ensure that the Worksite Traffic Supervisor immediately corrects all safety deficiencies. Do not allow minor deficiencies that are not immediate safety hazards to remain uncorrected for more than 24-hours.

4. Ensure that the Worksite Traffic Supervisor is available within 45 minutes after notification of an emergency situation and is prepared to positively respond to repair the work zone traffic control or to provide alternate traffic arrangements.

5. The City may disqualify and remove from the project a Worksite Traffic Supervisor that fails to comply with the provisions of this specification. The City may suspend all activities, except traffic and erosion control and such other activities that are necessary for project maintenance and safety, for failure to comply with these provisions.

6. Ensure that the Worksite Traffic Supervisor performs a drive-through inspection and observes traffic flow as soon as the work zone is activated and in each subsequent phase of work as they are opened to traffic. Provide to the Engineer and City a report that includes a listing of any deficiencies and proposed corrective measures.

7. Ensure that the Worksite Traffic Supervisor conducts within the limits of the project, daily daytime and weekly night time inspections within the limits of the project for projects with predominate daytime work activities and daily nighttime and weekly daytime inspections for projects with predominate nighttime work, of all traffic control devices, traffic flow, pedestrian, bicyclist, student, bus rider, school, residence and business accommodations.

8. Advise the project personnel of the schedule of these inspections and give them the opportunity to join in the inspection as is deemed necessary. Submit a comprehensive weekly report to the Engineer and City and include the condition of all traffic control devices (including pavement markings) being used. The inspection report shall also include assurances that pedestrians are accommodated with a safe travel path around work sites and safely separated from mainline traffic, that existing or detoured bicyclist paths and bus routes and stops are being maintained satisfactorily throughout the project limits, that existing residences in the work areas are being provided with adequate access for vehicular and pedestrian traffic at all times and that existing businesses in the work areas are being provided with adequate entrances for vehicular and pedestrian traffic during business hours. The Worksite Traffic Supervisor shall sign the report and certify that all of the above issues are being handled in accordance with the Contract Documents. If deficiencies are noted, the Worksite Traffic Supervisor shall note such deficiencies and include the proposed corrective actions in the report and implement immediate corrective action.

D. Traffic Control Plan

1. The Contractor is responsible for preparing a Traffic Control Plan (TCP) to be signed and sealed by a licensed Florida Engineer competent and trained in the preparation of TCP. The licensed Florida Engineer (TCPE) signing and sealing the Traffic Control Plan shall review all of the reports from the Worksite Traffic Supervisor and inspect the installation for compliance with his approved plan upon the initial installation and for each subsequent phase of the plan. The Contractor shall provide the Engineer and City with an inspection report from the TCPE indicating compliance with his approved TCP. The TCP shall meet the requirements of the Manual on Uniform Traffic Control Devices (MUTCD) Part VI, and the following jurisdictional agencies.

   a. City of Fort Lauderdale Transportation and Mobility

   b. City of Fort Lauderdale Department of Sustainable Development

c. City of Fort Lauderdale Fire Department

d. City of Fort Lauderdale Police Department

e. School Board of Broward County

2. Standards: FDOT Design Standards (DS) are the minimum standards for the use in the development of all traffic control plans. The MUTCD Part VI is the minimum national standard for traffic control for highway construction, maintenance, and utility operations. Follow the basic principles and minimum standards contained in these documents for the design, application, installation, maintenance, and removal of all traffic control devices, warning devices and barriers which are necessary to protect the public and workers from hazards within the project limits.

3. The Contractor shall provide sufficient time in the construction schedule to develop and obtain approval for each TCP.

4. The Contractor shall include provisions for detouring pedestrians and providing maintenance of traffic plans and conveyances that meet current ADA (Americans with Disabilities Act) requirements.

5. The Contractor shall submit approved maintenance of traffic plans and schedules for the development, review, approval and implementation of the maintenance of traffic plan in accordance with the Contract Documents and Section 01300, “Submittals”.

PART 2 -- PRODUCTS (Not Used)

PART 3 – EXECUTION

3.01 GENERAL

A. Maintenance of Roadway Surfaces: Maintain all lanes that are being used for the maintenance of traffic, including those on detours and temporary facilities, under all weather conditions. Keep the lanes free of dust, dirt, muck, potholes and rutting. Provide the lanes with the drainage facilities necessary to maintain a smooth riding surface under all weather conditions.

B. Number of Traffic Lanes:

1. Maintain one lane of traffic in each direction.

2. Maintain two lanes of traffic in each direction at existing four (or more) lane cross roads.

3. Construct each lane used for maintenance of traffic at least as wide as the traffic lanes existing in the area before commencement of construction. Do not allow traffic control and warning devices to encroach on lanes used for maintenance of traffic.

4. The Engineer may allow the Contractor to restrict traffic to one-way operation for short periods of time provided that the Contractor employs adequate means of

traffic control and does not unreasonable delay traffic, and conforms to the approved requirements in the TCP. The Contractor shall include as a part of the TCP the estimated periods of one-way traffic operations and estimation of reasonable time delays and shall obtain the prior approval of the City Engineer having jurisdiction for these time periods and time delays. The Contractor shall include the TCP as a part of his Plan of Operation and MOT plan and in accordance with Section 01300, “Submittals”.

C. Crossings and Intersections: Provide and maintain adequate accommodations for intersecting and crossing traffic. Do not block or unduly restrict any road or street crossing the project unless approved by the Engineer and City Engineer. Maintain all existing actuated or traffic responsive mode signal operations for main and side street movements for the duration of the Contract. Restore any loss of detection within twelve (12) hours. Use only detection technology approved by the Engineer to restore detection capabilities. Before beginning any construction, provide the Engineer a plan for maintaining detection devices for each intersection and the name(s) and phone numbers of persons that can be contracted when signal operation malfunctions.

D. Access for Residences and Businesses: Provide continuous access to all residences and all places of business, adjacent schools, common property and community facilities.

E. Safe Walk Route: The safe walk route for all school students within the vicinity of the construction zone shall be maintained during the times students are arriving at or leaving school. If the current walking surface cannot be maintained, a temporary road-rock four-ft walkway shall be created in accordance with Broward County requirements. Accommodations shall be made immediately by the Contractor for the disabled persons.

F. Protection of the Work from Injury by Traffic: Where traffic would be injurious to a base, surface course, or structure constructed as a part of the work, maintain all traffic outside the limits of such areas until the potential for injury no longer exists.

G. Flagger: Provide trained flaggers as required by approved TCPs. State certified school crossing guards or off duty police officers shall be required to cross students at any locations other than those currently used.

H. Use of High Visibility Safety: Provide personnel with appropriate high visibility safety garments. Ensure that these garments be worn whenever the workers are within fifteen (15) feet of the edge of the travel way and during nighttime operations. Workers operating machinery or equipment in which loose clothing could become entangled during operation shall be required to wear appropriate high visibility clothing that will not be subject to entanglement such as orange shirts or jackets. Require Contractor personnel to wear reflective orange vest/garment during nighttime operations.

I. Existing Pavement Markings: Where a detour changes the lane use of where normal vehicle paths are altered during construction, remove all existing pavement markings that will conflict with the adjusted vehicle paths. Do not overpaint. Remove existing pavement markings using a method that will not damage the surface texture of the pavement and which will eliminate the previous marking pattern regardless of weather and light conditions. Remove all pavement markings that will be in conflict with “next phase of operation” vehicle paths as described above, before opening to traffic.

J. Detours

1. General: Construct and maintain detour facilities wherever it becomes necessary to divert traffic from any existing roadway or bridge, or wherever construction operations block the flow of traffic.

2. Construction: Plan, construct, and maintain detours for the safe passage of traffic in all conditions of weather. Provide the detour with all facilities necessary to meet this requirement.

3. Construction Methods: Select and use construction methods and materials that provide a stable and safe detour facility. Construct the detour facility to have sufficient durability to remain in good condition, supplemented by maintenance, for the entire period that the detour is required.

4. Removal of Detours: Remove detours when they are no longer needed and before the Contract is completed. Restore the area used for detours to a condition equal to or better than existed before beginning of construction. Take ownership of all materials from the detour and remove them.

5. Detours Over Existing Roads and Streets: When the TCP specifies that traffic be detoured over roads or streets outside the project area, do not maintain such roads or streets; however, maintain all signs and other devices placed for the purpose of the detour.

K. Traffic Control Officer.

1. Provide uniformed law enforcement officers, including marked law enforcement vehicles, to assist in controlling and directing traffic in the work zone when traffic control in a signalized intersection is necessary when signals are not in use.

L. Driveway Maintenance.

1. General: Ensure that each residence and or business has safe, stable, and reasonable access.

2. Construction Methods: Place, level, manipulate, compact, and maintain the material, to the extent appropriate for the intended use. As permanent driveway construction is accomplished at a particular location, the Contractor may salvage and reuse previously placed materials that are suitable for reuse on other driveways.

M. Temporary Traffic Control Devices.

1. Installation and Maintenance: Install and maintain adequate traffic control devices, warning devices and barriers to protect the traveling public and workers, and to safeguard the work area. Erect the required traffic control devices, warning devices and barriers to prevent any hazardous conditions and in conjunction with any necessary traffic re-routing. Immediately remove, turn or cover any devices or barriers that do not apply to existing conditions.

2. Notify the Engineer, City, and City Engineer's representative of any scheduled operation, which will affect traffic patterns or safety, sufficiently in advance of commencing such operation to permit his review of the plan for the proposed installation of traffic control devices, warning devices of barriers.

3. Ensure an employee is assigned the responsibility of maintaining the position and condition of all traffic control devices, warning devices and barriers throughout the duration of the Contract. Keep the Engineer, City, and City Engineer's representative advised at all times of the identification and means of contacting this employee on a 24-hour basis.

4. Keep traffic control devices, warning devices, safety devices and barriers in the correct position, properly directed, clearly visible and clean, at all times. Immediately repair, replace or clean damaged, defaced or dirty devices or barriers.

N. Work Zone Signs: Provide signs in accordance with the approved TCPs and Design Standards.

O. High Intensity Flashing Lights: Furnish Type B lights in accordance with the approved TCPs and Design Standards.

P. Warning/Channelizing Devices: Furnish warning/channelizing devices in accordance with the approved TCPs and Design Standards.

1. Reflective Collars for Traffic Cones: At night use cone collars, designed to properly fit the taper of the cone when installed. Place the upper 6-inch collar a uniform 3 ½ inch distance from the top of the cone and the lower 4 inch collar a uniform 2 inch distance below the bottom of the upper 6 inch collar. Ensure that the collars are capable of being removed for temporary use or attached permanently to the cone in accordance with the manufacturer's recommendations. Provide a white sheeting having a smooth outer surface and that essentially has the property of a retro-reflector over its entire surface.

2. Barrier Wall (Temporary): Furnish, install, maintain, remove and relocate a temporary barrier wall in accordance with the approved TCPs.

3. Glare Screen (Temporary): Furnish, install, maintain, remove and relocate glare screen systems in conjunction with temporary barrier wall at locations identified in the approved TCPs. Ensure the anchorage of the glare screen to the barrier is capable of safely resisting an equivalent tensile load of 600 lb/ft of glare screen, with a requirement to use a minimum of three (3) fasteners per barrier section. When glare screen is utilized on temporary barrier wall, warning lights will not be required.

Q. Guardrail (Temporary): Furnish guardrail (temporary) in accordance with the approved TCPs.

R. Advance Warning Arrow Panel: Furnish advance warning panel in accordance with the approved plans, Design Standards and approved TCPs.

S. Temporary Traffic Control Signals: furnish, install and operate temporary traffic control signals as indicated in the approved TCPs. Temporary traffic control signals will consist of either portable or fixed traffic signals. Provide certification that the portable traffic signals meet the requirements of the Design Standards. The Engineer may approve used signal equipment if it is in acceptable condition.

T. Work Zone Pavement Marking.

1. Description: Furnish and install Work Zone Pavement Markings for maintenance of traffic construction areas and in close conformity with the lines and details shown on the plans. Measure the reflectivity of white and yellow stripes in accordance with Florida Method FM 5-541. Re-stripe anytime the reflectivity falls below the final values shown in FM 5-541. Use only pavement marking materials that do not contain any lead or chromium compounds.

2. Centerlines, lane lines, edge lines, stop bars and turn arrows in work zones will be required in accordance with the MUTCD with the following additions:

   a. Install edge lines on paved shoulders.

   b. Place edge lines on all detours where vehicle paths are altered from normal operations and where a lane is narrowed from its normal width for any reason.

   c. Apply Work zone Pavement Markings, including arrows and messages as determined by the TCPE to be required for the safe operation of the facility, before the end of the day if the highway is open to traffic. Channelizing devices may be used to direct traffic during the day before placing the Work Zone Pavement Markings.

   d. Work Zone Pavement Markings shall be designated in the approval TCPs as removable or non-removable.

- END OF SECTION -

SECTION 01530

PROTECTION OF EXISTING FACILITIES

PART 1 - GENERAL

1.01 THE REQUIREMENT

A. The Contractor shall be responsible for the preservation and protection of property adjacent to the work site against damage or injury as a result of its operations under this Contract. Any damage or injury occurring on account of any act, omission or neglect on the part of the Contractor shall be restored in a proper and satisfactory manner or replaced by and at the expense of the Contractor to an equal or superior condition than previously existed.

B. The Contractor shall comply promptly with such safety regulations as may be prescribed by the City or the local authorities having jurisdiction and shall, when so directed, properly correct any unsafe conditions created by, or unsafe practices on the part of, its employees. In the event of the Contractor's failure to comply, the City may take the necessary measures to correct the conditions or practices complained of, and all costs thereof will be deducted from any monies due the Contractor. Failure of the Engineer to direct the correction of unsafe conditions or practices shall not relieve the Contractor of its responsibility hereunder.

C. In the event of any claims for damage or alleged damage to property as a result of work under this Contract, the Contractor shall be responsible for all costs in connection with the settlement of or defense against such claims. Prior to commencement of work in the vicinity of property adjacent to the work site, the Contractor, at its own expense, shall take such surveys as may be necessary to establish the existing condition of the property. Before final payment can be made, the Contractor shall furnish satisfactory evidence that all claims for damage have been legally settled or sufficient funds to cover such claims have been placed in escrow, or that an adequate bond to cover such claims has been obtained.

1.02 PROTECTION OF WORK AND MATERIAL

A. During the progress of the work and up to the date of final payment, the Contractor shall be solely responsible for the care and protection of all work and materials covered by the Contract.

B. All work and materials shall be protected against damage, injury or loss from any cause whatsoever, and the Contractor shall make good any such damage or loss at its own expense. Protection measures shall be subject to the approval of the Engineer.

1.03 BARRICADES, WARNING SIGNS AND LIGHTS

A. The Contractor shall provide, erect and maintain as necessary, strong and suitable barricades, danger signs and warning lights along all roads accessible to the public, as required by the authority having jurisdiction, to insure safety to the public. All barricades and obstructions along public roads shall be illuminated at night and all lights for this purpose shall be kept burning from sunset to sunrise.

B. Each Contractor shall provide and maintain such other warning signs and barricades in areas of and around their respective work as may be required for the safety of all those employed in the work, City operating personnel, or those visiting the site.

1.04 TEMPORARY BRIDGES

A. Construct temporary bridges at all points where maintenance of traffic across pipeline construction is necessary.

B. Make bridges over public streets, roads, and highways acceptable to authority having jurisdiction thereover.

C. Bridges erected over private roads and driveways shall be adequate for service to which they will be subjected.

D. Provide substantial guardrails and suitably protected approaches.

E. Provide foot bridges not less than 4 feet wide with handrails and uprights of dressed lumber.

F. Maintain bridges in place as long as conditions of the Work require their use for safety of public, except that when necessary for proper prosecution of the Work in immediate vicinity of bridge. Bridge may be relocated or temporarily removed for such period as Engineer may permit.

1.05 EXISTING UTILITIES AND STRUCTURES

A. The term existing utilities shall be deemed to refer to both publicly-owned and privately-owned utilities such as electric power and lighting, telephone, water, gas, storm drains, process lines, sanitary sewers and all appurtenant structures.

B. Where existing utilities and structures are indicated on the Drawings, it shall be understood that all of the existing utilities and structures affecting the work may not be shown and that the locations of those shown are approximate only. It shall be the responsibility of the Contractor to ascertain the actual extent and exact location of existing utilities and structures. In every instance, the Contractor shall notify the proper authority having jurisdiction and obtain all necessary directions and approvals before performing any work in the vicinity of existing utilities.

C. Prior to beginning any excavation work, the Contractor shall, through field investigations, determine any conflicts or interferences between existing utilities and new utilities to be constructed under this project. This determination shall be based on the actual locations, elevations, slopes, etc., of existing utilities as determined in the field investigations, and locations, elevation, slope, etc. of new utilities as shown on the Drawings. If interference exists, the Contractor shall bring it to the attention of the Engineer as soon as possible. If the Engineer agrees that interference exists, it shall modify the design as required.

D. Additional costs to the Contractor for this change shall be processed through a Change Order as detailed elsewhere in these Contract Documents. In the event the Contractor fails to bring a potential conflict or interference to the attention of the Engineer prior to beginning excavation work, any actual conflict or interference which does arise during the Project shall be corrected by the Contractor, as directed by the Engineer, at no additional expense to the City.

E. The work shall be carried out in a manner to prevent disruption of existing services and to avoid damage to the existing utilities. Temporary connections shall be provided, as required, to insure uninterrupted existing services. Any damage resulting from the work of

this Contract shall be promptly repaired by the Contractor at its own expense in a manner approved by the Engineer and further subject to the requirements of any authority having jurisdiction. Where it is required by the authority having jurisdiction that they perform their own repairs or have them done by others, the Contractor shall be responsible for all costs thereof.

F. Where excavations by the Contractor require any utility lines or appurtenant structures to be temporarily supported and otherwise protected during the construction work, such support and protection shall be provided by the Contractor. All such work shall be performed in a manner satisfactory to the Engineer and the respective authority having jurisdiction over such work. In the event the Contractor fails to provide proper support or protection to any existing utility, the Engineer may, at its discretion, have the respective authority to provide such support or protection as may be necessary to insure the safety of such utility, and the costs of such measures shall be paid by the Contractor.

G. Protection of existing utilities, structures and other facilities: The underground pipes, utilities and structures shown on the Plans are located according to the best information available, but may vary by several feet from both the position and elevation shown. The Contractor shall explore far enough ahead of its work to determine the exact location and condition of such utilities, structures or facilities so that, before the Work is installed, the Engineer may change the line or grade of the pipe or other facility, should that become necessary to avoid a conflict. Should this exploration reveal that adjustments to the work are necessary; the Contractor shall immediately notify the Engineer and coordinate with him to adjust the work in a timely fashion avoiding delays to construction. No request for additional compensation or Contract time (except for a non-compensable time extension at the sole discretion of the Engineer, whose decision shall be final) resulting from encountering utilities or structures not shown, or differing in location or elevation from that shown, will be considered. The Contractor shall explore sufficiently ahead of the Work to allow time for any necessary adjustment without delay occasioned by encountering underground utilities or structures which could have or should have been discovered by timely exploration ahead of the Work shall rest solely with the Contractor.

H. Relocation of existing utilities: The relocation of existing utilities, as noted on the Plans, or for the convenience of the Contractor shall be the responsibility of the Contractor. This work shall be completed by either the forces of the existing utility or the Contractor's forces at the discretion of the responsible utility. If the work is to be performed by the Contractor, all work shall be done in accordance with the utility company's requirements. Under no circumstances shall the Contractor be authorized extra payment for this work, and all cost for the relocation shall be the responsibility of the Contractor.

I. Any conflicts between the field investigation and the information shown on the Plans shall be brought to the immediate attention of the Engineer

1.06 TREES WITHIN PROJECT LIMITS

A. General: The Contractor shall exercise all necessary precautions so as not to damage or destroy any trees on the project site, and shall not trim or remove any trees unless such trees have been approved for trimming or removal by the jurisdictional agency or City. All existing trees which are damaged during construction shall be replaced by the Contractor or a certified tree company to the satisfaction of the City.

B. Replacement: The Contractor shall immediately notify the City if any tree is damaged by the Contractor's operations. If, in the opinion of the City, the damage is such that replacement is necessary, the Contractor shall replace the tree at its own expense. The tree shall be of a like size and variety as the tree damaged, or, if of a smaller size, the Contractor shall pay to the City compensatory payment acceptable to the City.

1.07 NOTIFICATION BY THE CONTRACTOR

A. Prior to any excavation in the vicinity of any existing underground facilities, including all water, sewer, storm drain, gas, petroleum products, or other pipelines; all buried electric power, communications, or television cables; all traffic signal and street lighting facilities; and all roadway and state highway rights-of-way the Contractor shall notify the respective authorities representing the owners or agencies responsible for such facilities not less than three days nor more than seven days prior to excavation.

1.08 DETOURS

A. Where authority having jurisdiction requires that traffic be maintained over construction work in a public street, road, or highway, and traffic cannot be maintained on original roadbed or pavement, construct and maintain detour around the Work. Coordinate traffic routing with that of others working in same or adjacent areas.

1.09 RESTORATION OF PAVEMENT

A. General: All paved areas including asphaltic concrete berms cut or damaged during construction shall be replaced with similar materials and of equal thickness to match the existing adjacent undisturbed areas, except where specific resurfacing requirements have been called for in the Contract Documents. All pavements which are subject to partial removal shall be neatly saw cut in straight lines.

B. Temporary Resurfacing: Wherever required by the public authorities having jurisdiction, the Contractor shall place temporary surfacing, signage, striping and/or other traffic controls as required, promptly after backfilling and shall maintain such surfacing for the period of time fixed by said authorities before proceeding with the final restoration of improvements.

C. Permanent Resurfacing: In order to obtain a satisfactory junction with adjacent surfaces, the Contractor shall saw cut back and trim the edge so as to provide a clean, sound, vertical joint before permanent replacement of an excavated or damaged portion of pavement. Damaged edges of pavement along excavations and elsewhere shall be trimmed back by saw cutting in straight lines. All pavement restoration and other facilities restoration shall be constructed to finish grades compatible with adjacent undisturbed pavement.

PART 2 - PRODUCTS

(NOT USED)

PART 3 - EXECUTION

(NOT USED)

- END OF SECTION -

SECTION 01550

SITE ACCESS AND STORAGE

PART 1 - GENERAL

1.01 HIGHWAY LIMITATIONS:

A. The CONTRACTOR shall make its own investigation of the condition of available public and private roads and of clearances, restrictions, bridge load limits, and other limitations affecting transportation and ingress and egress to the site of the WORK. It shall be the CONTRACTOR's responsibility to construct and maintain any haul roads required for its construction operations.

1.02 TEMPORARY CROSSINGS:

A. General: Continuous, unobstructed, safe, and adequate pedestrian and vehicular access shall be provided to fire hydrants, commercial and industrial establishments, churches, schools, parking lots, service stations, motels, fire and police stations, and hospitals. Safe and adequate public transportation stops and pedestrian crossings at intervals not exceeding 300 feet shall be provided. The CONTRACTOR shall cooperate with parties involved in the delivery of mail and removal of trash and garbage so as to maintain existing schedules for such services. Vehicular access to residential driveways shall be maintained to the property line except when necessary construction precludes such access for reasonable periods of time.

B. Emergency Access and Security: In order to provide protection to the workers and residents, the CONTRACTOR shall maintain emergency access to all adjacent properties at all times during construction. If a road is required to be closed to vehicular traffic and the distance of the closure exceeds 150 feet between stabilized surfaces, or prevents access to properties for a distance that exceeds 150 feet, the CONTRACTOR shall provide a 10-foot wide stabilized accessway on one side of the trench capable of supporting a Fire Truck. CONTRACTOR shall also provide stabilized accessways across the trench or un-stabilized area a minimum of 6 feet in width at a spacing not to exceed 100 feet capable of supporting foot traffic. These accessways shall be protected and delineated with lighted barricades or other such devices as approved by the regulatory agency. Both ends of the emergency accessway shall be blocked in accordance with the MOT permit approved by City with signage indicating that this accessway is to be used by emergency vehicles only.

C. No trenches or holes shall be left open after working hours. In the event a trench must be left open after hours, it shall be done so only with the express written permission from the Engineer, and it shall be the CONTRACTOR's responsibility to provide proper protection of the open trench or hole as required by the regulatory agency. In addition, the CONTRACTOR shall provide a security guard at the site whenever the CONTRACTOR's personnel are not present, 24 hours per day/7 days per week. It shall be the Security Guard’s responsibility to protect the open trench or hole from trespassers and to direct emergency personnel on site. The Security Guard shall not have any other responsibilities such as operating pumps or equipment but shall be dedicated to protecting the trench or open hole. The Security Guard shall be equipped with a wireless telephone capable of calling 911 to report an emergency and shall keep that telephone

on their person at all times. In addition to this provision the CONTRACTOR shall maintain trench safety and comply with current OSHA regulations and the Trench Safety Act. The CONTRACTOR shall maintain and keep all safety barricades, signage, flashers, and detours, in operating condition. A copy of the approved MOT plans, and details, shall be on site at all times.

D. Measurement and payment for security guard services shall be included in the Mobilization unit price.

E. Temporary Bridges: Wherever necessary, the CONTRACTOR shall provide suitable temporary bridges or steel plates over unfilled excavations, except in such cases as the CONTRACTOR shall secure the written consent of the individuals or authorities concerned to omit such temporary bridges or steel plates, which written consent shall be delivered to the Engineer prior to excavation. All such bridges or steel plates shall be maintained in service until access is provided across the backfilled excavation. Temporary bridges or steel plates for street and highway crossing shall conform to the requirements of the authority having jurisdiction in each case, and the CONTRACTOR shall adopt designs furnished by said authority for such bridges or steel plates, or shall submit designs to said authority for approval, as may be required.

F. Street Use: Nothing herein shall be construed to entitle the CONTRACTOR to the exclusive use of any public street, alleyway, or parking area during the performance of the WORK hereunder, and it shall so conduct its operations as not to interfere unnecessarily with the authorized WORK of utility companies or other agencies in such streets, alleyways, or parking areas. No street shall be closed to the public without first obtaining permission of the Engineer and proper governmental authority. Where excavation is being performed in primary streets or highways, one lane in each direction shall be kept open to traffic at all times unless otherwise indicated. Toe boards shall be provided to retain excavated material if required by the Engineer or the agency having jurisdiction over the street or highway. Fire hydrants on or adjacent to the WORK shall be kept accessible to fire-fighting equipment at all times. Temporary provisions shall be made by the CONTRACTOR to assure the use of sidewalks and the proper functioning of all gutters, storm drain inlets, and other drainage facilities.

G. Traffic Control: For the protection of traffic in public or private streets and ways, the CONTRACTOR shall provide, place, and maintain all necessary barricades, traffic cones, warning signs, lights, and other safety devices in accordance with the requirements of City and the "Manual of Uniform Traffic Control Devices, Part VI - Traffic Controls for Street and Highway Construction and Maintenance Operations," published by U.S. Department of Transportation, Federal Highway Administration (ANSI D6.1).

H. The CONTRACTOR shall take all necessary precautions for the protection of the WORK and the safety of the public. All barricades and obstructions shall be illuminated at night, and all lights shall be kept burning from sunset until sunrise. The CONTRACTOR shall station such guards or flaggers and shall conform to such special safety regulations relating to traffic control as may be required by the public authorities within their respective jurisdictions. All signs, signals, and barricades shall conform to the requirements of the Florida Department of Transportation.

I. The CONTRACTOR shall submit 3 copies of a traffic control plan to the Broward County Traffic Engineering Division for approval a minimum of 2 weeks prior to construction.

The CITY reserves the right to observe these traffic control plans in use and to make any changes as field conditions warrant. Any changes shall supersede these plans and be done solely at the CONTRACTOR's expense.

J. The CONTRACTOR shall remove traffic control devices when no longer needed, repair all damage caused by installation of the devices, and shall remove post settings and backfill the resulting holes to match grade.

K. Temporary Driveway Closure: The CONTRACTOR shall notify the CITY of the closure of the driveways to be closed more than one eight-hour work day at least 2 weeks prior to the closure. The CONTRACTOR shall minimize the inconvenience and minimize the time period that the driveways will be closed. The CONTRACTOR shall fully explain to the CITY/occupant how long the WORK will take and when closure is to start.

1.03 CONTRACTOR'S WORK AND STORAGE AREA:

A. The CONTRACTOR shall designate and arrange for the use of a portion of the property, adjacent to the WORK for its exclusive use during the term of the Contract as a storage and shop area for its construction operations relative to this Contract. This shall include but not be limited to interim storage of suitable materials for fill or backfill. Storage areas shall be fenced for the safety of the surrounding neighborhood (minimum 6 foot chain link fence).

B. The CONTRACTOR shall make its own arrangements for any necessary off-site storage or shop areas necessary for the proper execution of the WORK. This shall include but not be limited to interim storage of suitable materials for fill or backfill.

C. The CONTRACTOR shall construct and use a separate storage area for hazardous materials used in constructing the WORK.

1. For the purpose of this paragraph, hazardous materials to be stored in the separate area are all products labeled with any of the following terms: Warning, Caution, Poisonous, Toxic, Flammable, Corrosive, Reactive, or Explosive. In addition, whether or not so labeled, the following materials shall be stored in the separate area: diesel fuel, gasoline, new and used motor oil, hydraulic fluid, cement, paints and paint thinners, two-part epoxy coatings, sealants, asphaltic products, glues, solvents, wood preservatives, sand blast materials, and spill absorbent.

2. Hazardous materials shall be stored in groupings according to the Material Safety Data Sheets.

3. The CONTRACTOR shall develop and submit to the Engineer a plan for storing and disposing of the materials above.

4. The CONTRACTOR shall obtain and submit to the Engineer a single EPA number for wastes generated at the site.

5. The separate storage area shall meet all the requirements of all authorities having jurisdiction over the storage of hazardous materials.

6. All hazardous materials which are delivered in containers shall be stored in the original containers until use. Hazardous materials which are delivered in bulk shall be stored in containers which meet the requirements of authorities having jurisdiction.

1.04 PARKING:

A. The CONTRACTOR shall:

1. Provide temporary parking areas as follows:

a. 4 spaces for the CITY and Engineer

b. 1 space designated for the handicapped or as required by regulatory agencies

2. The CONTRACTOR shall direct its employees to park in designated areas secured by the CONTRACTOR.

3. Traffic and parking areas shall be maintained in a sound condition, free of excavated material, construction equipment, mud, and construction materials. The CONTRACTOR shall repair breaks, potholes, low areas which collect standing water, and other deficiencies.

PART 2 - PRODUCTS (Not Applicable)

PART 3 - EXECUTION (Not Applicable)

- END OF SECTION -

SECTION 01560

TEMPORARY ENVIRONMENTAL CONTROLS

PART 1 - GENERAL

1.01 EXPLOSIVES AND BLASTING

A. The use of explosives on the Work will not be permitted.

1.02 DUST ABATEMENT

A. The Contractor shall furnish all labor, equipment, and means required and shall carry out effective measures wherever and as often as necessary (as determined by the Engineer) to prevent its operation from producing dust in amounts damaging to property, cultivated vegetation, or domestic animals, or causing a nuisance to persons living in or occupying buildings in the vicinity. The Contractor shall be responsible for any damage resulting from any dust originating from its operations. The dust abatement measures shall be continued until the Contractor is relieved of further responsibility by the Engineer. No separate payment will be allowed for dust abatement measures and all costs thereof shall be included in the Contractor's bid price.

1.03 RUBBISH CONTROL

A. During the progress of the Work, the Contractor shall keep the site of the Work and other areas used by it in a neat and clean condition, and free from any accumulation of rubbish. The Contractor shall dispose of all rubbish and waste materials of any nature occurring at the Work site, and shall establish regular intervals of collection and disposal of such materials and waste. The Contractor shall also keep its haul roads free from dirt, rubbish, and unnecessary obstructions resulting from its operations. Disposal of all rubbish and surplus materials shall be off the site of construction in accordance with local codes and ordinances governing locations and methods of disposal, and in conformance with all applicable safety laws, and to the particular requirements of Part 1926 of the OSHA Safety and Health Standards for Construction.

1.04 SANITATION

A. Toilet Facilities: Fixed or portable chemical toilets shall be provided wherever needed for the use of employees. Toilets at construction job sites shall conform to the requirements of Part 1926 of the OSHA Standards for Construction.

B. Such facilities shall be made available when the first employees arrive on the Work, shall be properly secluded from public observation, and shall be constructed and maintained in suitable numbers and at such points and in such manner as may be required.

C. The Contractor shall maintain the sanitary facilities in a satisfactory and sanitary condition at all time and shall enforce their use. It shall rigorously prohibit the committing of

nuisances on the site of the Work, on the lands of the City, or on adjacent property.

D. The City and the Engineer shall have the right to inspect any building or other facility erected, maintained, or used by the Contractor, to determine whether or not the sanitary regulations have been complied with.

E. Sanitary and Other Organic Wastes: The Contractor shall establish a regular daily collection of all sanitary and organic wastes. All wastes and refuse from sanitary facilities provided by the Contractor or organic material wastes from any other source related to the Contractor's operations shall be disposed of away from the site in a manner satisfactory to the Engineer and in accordance with all laws and regulations pertaining thereto.

1.05 CHEMICALS

A. All chemicals used during project construction or furnished for project operation, whether defoliant, soil sterilant, herbicide, pesticide, disinfectant, polymer, paint, fuel, solvent or reactant of other classification, shall show approval of either the U.S. Environmental Protection Agency or the U.S. Department of Agriculture. The handling, storage, use and disposal of all such chemicals and disposal of residues shall be in strict accordance with all applicable rules and regulations of Federal, State and local jurisdictional agencies and the printed instructions of the manufacturer and all regulatory requirements. Copies of antidote literature shall be kept at the storage site and at the Contractor's job site office. A supply of antidotes shall be kept at the Contractor's office.

1.06 NOISE CONTROL

A. Noise resulting from the Contractor's work shall not exceed the noise levels and other requirements stated in local ordinances. The Contractor shall be responsible for curtailing noise resulting from its operation. It shall, upon written notification from the Engineer or noise control officers, make any repairs, replacements, adjustments, additions and furnish mufflers when necessary to fulfill requirements.

1.07 EROSION ABATEMENT AND WATER POLLUTION

A. It is imperative that any Contractor dewatering operation not contaminate or disturb the environment of the properties adjacent to the Work. The Contractor shall, therefore, schedule and control its operations to confine all runoff water from disturbed surfaces, water from dewatering operations that becomes contaminated with silt, muck and other deleterious matter, fuels, oils, bitumens, calcium chloride, chemicals and other polluting materials.

B. The Contractor shall construct temporary silting basin(s) of adequate size and provide all necessary temporary materials, operations and controls including, but not limited to, filters, coagulants, screens, and other means necessary to attain the required discharge water quality.

C. The Contractor shall be responsible for providing, operating and maintaining materials and equipment used for conveying the clear water to the point of discharge. All pollution prevention procedures, materials, equipment and related items shall be operated and maintained until such time as the dewatering operation is discontinued. Upon the removal of the materials, equipment and related items, the Contractor shall restore the area to the condition prior to its commencing work.

D. The Contractor shall be responsible for acquiring all applicable permits for discharge of waters as necessary, except as may have otherwise been provided in other sections of these specifications.

1.08 MANATEE CONDITIONS FOR IN WATER WORK

A. The Contractor shall comply with the conditions outlined in the “Standard Manatee Conditions for In-Water Work” as published by the Florida Fish and Wildlife Conservation Commission. See the attached document at the end of this specification section for additional information.

1.09 PRECAUTIONS DURING ADVERSE WEATHER

A. During adverse weather, and against the possibility thereof, the Contractor shall take all necessary precautions so that the Work may be properly done and satisfactory in all respects. When required, protection shall be provided by use of tarpaulins, wood and building paper shelters, or other acceptable means. The Contractor shall be responsible for all changes caused by adverse weather.

B. The City may suspend construction operations at any time when, in its judgment, the conditions are unsuitable or the proper precautions are not being taken, whatever the weather conditions may be, in any season.

1.10 HURRICANE PRECAUTIONS

A. The requirements of the Contract Documents apply to the work of this section.

B. The Contractor shall take all precautions necessary to protect the job site during hurricane and tropical storm watches and warnings.

C. Within 30 days of the date of Notice to Proceed, the Contractor shall submit to the Engineer and City a Hurricane Preparedness Plan. The plan should outline the necessary measures which the Contractor proposes to perform at no additional cost to the City. The Plan shall be provided for informational purposes only and will not be reviewed by the Engineer or City.

1.11 PERIODIC CLEANUP AND BASIC SITE RESTORATION

A. During construction, the Contractor shall regularly remove from the site all accumulated debris and surplus materials of any kind which results from its operations. Unused equipment and tools shall be stored at the Contractor's yard or base of operations for the

project.

B. The Contractor shall perform the cleanup work on a regular basis and as frequently as ordered by the Engineer. Basic site restoration in a particular area shall be accomplished immediately following the installation or completion of the required facilities in that area. Furthermore, such work shall also be accomplished, when ordered by the Engineer, if partially completed facilities must remain incomplete for some time period due to unforeseen circumstances.

C. Upon failure of the Contractor to perform periodic clean-up and basic restoration of the site to the Engineer's satisfaction, the Engineer may, upon five days prior written notice to the Contractor, employ such labor and equipment as it deems necessary for the purpose, and all costs resulting therefrom shall be charged to the Contractor and deducted from amounts of money that it may be due.

PART 2 - PRODUCTS

(NOT USED)

PART 3 - EXECUTION

(NOT USED)

- END OF SECTION -

SECTION 01570

NPDES REQUIREMENTS

PART 1 -- GENERAL

1.01 THE REQUIREMENT

A. This Section describes the required documentation to be prepared and signed by the Contractor before conducting construction operations, in accordance with the terms and conditions of the National Pollutant Discharge Elimination System (NPDES) Stormwater Permitting program for construction activity, as required by Florida Administrative Code (F.A.C.) Chapter 62-621 and administered by the Florida Department of Environmental Protection (FDEP).

B. The Contractor shall be responsible for implementation, maintenance and inspection of stormwater pollution prevention control measures in accordance with F.A.C. Chapter 62-621 including, but not limited to, erosion and sediment control, stormwater management plans, waste collection and disposal, off-site vehicle tracking, and other practices shown on the Drawings and/or specified elsewhere in this or other specifications. The stormwater pollution prevention control measures shall include protection of offsite public and private storm sewer facilities potentially impacted during construction. Stormwater facilities include streets, inlets, pipes, ditches, swales, canals, culverts, control structures, and detention/retention areas.

C. The Contractor shall prepare and review implementation of the Stormwater Pollution Prevention Plan (SWPPP) in a meeting with the City prior to start of construction.

1.02 REFERENCE DOCUMENTS

A. “Guidelines for Erosion and Sediment Control, Planning and Implementation” and “Processes, Procedures and Methods to Control Pollution Resulting from all Construction Activity”, published by the United States Environmental Protection Agency.

PART 2 – PRODUCTS

(NOT USED)

PART 3 - EXECUTION

3.01 Contractor REQUIREMENTS

A. The Contractor SHALL SUBMIT a Notice of Intent to Use Generic Permit for Stormwater Discharge from Large and Small Construction Activities, (FDEP Form 62-621.300(4)(b)).

B. The Contractor shall provide all necessary labor and materials to maintain compliance with the permit requirements as found in FDEP document 62-621.300(4)(a) and the preliminary Stormwater Pollution Prevention Plan (SWPPP). These documents are included in the Appendices of the contract documents for convenience.

C. The SWPPP submitted by the City is preliminary in nature. The Contractor shall be responsible for preparing, submitting, and complying with a final SWPPP in full accordance with all regulatory requirements

3.02 RETENTION OF RECORDS

A. Retain a copy of the SWPPP at the construction site and at the Contractor's office from the date that it became effective to the date of project completion.

B. At project closeout, submit to the City all NPDES forms and certifications, as well as a copy of the SWPPP. Stormwater pollution prevention records will be retained by the City for a period of three (3) years from the date of project completion.

3.03 REQUIRED NOTICES

A. The following notices shall be posted by the Contractor within 60 days of a notice to proceed until the date of project final completion:

1. A copy of the submitted NOI and a brief project description, as given in the SWPPP, shall be posted at the construction site and at the Contractor's office in a prominent place for public viewing.

2. Notice to drivers of equipment and vehicles, instructing them to stop, check and clean tires of debris and mud before driving onto traffic lanes. Post such notices at every stabilized construction exit area.

3. Post a notice of waste disposal procedures in an easily visible location on site.

4. Notice of hazardous material handling and emergency procedures shall be posted with the NOI on site. Keep copies of Material Safety Data Sheets at a location on site that is known to all personnel.

- END OF SECTION -

SECTION 01580

PROJECT IDENTIFICATION AND SIGNS

PART 1 - GENERAL

1.01 THE REQUIREMENT

A. The Contractor shall furnish, install and maintain project identification signs and provide temporary on-site informational signs to identify key elements of construction facilities. Signs shall be removed upon completion of construction.

B. The Contractor shall notify property owners that may be affected by construction operation at least five (5) working days in advance.

1.02 RELATED REQUIREMENTS

A. All applicable sections of the Technical Specifications.

B. Conditions of the Contract.

1.03 PROJECT IDENTIFICATION SIGN

A. Up to two (2) painted signs, of not less than 32 square feet area each, with painted graphic content. Signs shall be in accordance with the General Conditions. Project signs must be submitted to the City for approval prior to fabrication and installation.

B. Graphic design, style of lettering, and colors: As designated by Engineer.

C. Erect on the site at a lighted location of high public visibility at a location outside the public Right-of-Way, as approved by Engineer.

D. An example project sign is provided at the end of this section.

1.04 INFORMATIONAL SIGNS

A. Painted signs and painted lettering, or standard products:

1. Size of signs and lettering: As required by regulatory agencies, or as appropriate to usage.

2. Colors: As required by regulatory agencies, otherwise of uniform colors throughout project.

B. Erect at appropriate locations to provide required information.

1.05 PROPERTY OWNER NOTIFICATION

A. All homes and businesses affected by construction activities shall be notified by use of a “doorhanger” type announcement describing at a minimum, the nature of the Work, the proposed schedule, and the Contractor’s contact information. An example door hanger is provided at the end of this section.

B. Door hangers shall be submitted to the City for approval prior to use.

C. Door hangers shall be printed and distributed by the Contractor.

1.06 QUALITY ASSURANCE

A. Sign Painter: Professional experience in type of Work required.

B. Finishes, Painting: Adequate to resist weathering and fading for scheduled construction period.

PART 2 - PRODUCTS

2.01 SIGN MATERIALS

A. Structure and Framing: May be new or used, wood or metal, in sound condition structurally adequate to Work and suitable for specified finish.

B. Sign Surfaces: Exterior softwood plywood with medium density overlay, standard large sizes to minimize joints.

C. Thickness: As required by standards to span framing members, to provide even, smooth surface without wave or buckles.

D. Rough Hardware: Galvanized.

E. Paint: Exterior quality:

1. Use Bulletin colors for graphics.

2. Colors for structure, framing, sign surfaces and graphics: As selected by Engineer.

PART 3 - EXECUTION

3.01 PROJECT IDENTIFICATION SIGN

A. Paint exposed surfaces of supports, framing and surface material; one coat of primer and one coat of exterior paint.

B. Paint graphics in styles, sizes and colors selected.

3.02 INFORMATIONAL SIGNS

A. Paint exposed surfaces: One coat of primer and one coat of exterior paint.

B. Paint graphics in styles, sizes and colors selected.

C. Install at a height for optimum visibility, on ground-mounted poles or attached to temporary structural surfaces.

3.03 MAINTENANCE

A. Maintain signs and supports in a neat, clean condition; repair damages to structure, framing or sign.

B. Relocate informational signs as required by progress of the Work.

3.04 REMOVAL

A. Remove signs, framing, supports and foundations at completion of project.

3.05 MEASUREMENT AND PAYMENT

A. There shall be no special measurement or payment for the Work under this section, it shall be included in the lump sum price bid for item ‘Mobilization’.

- END OF SECTION -

City of Fort Lauderdale

Stormwater Master Plan Improvements

Creating a resilient and safe coastal community

What's Happening?

What's Happening: The City of Fort Lauderdale is proactively preparing for the future by investing in new stormwater infrastructure to reduce flooding throughout our community.

(954) 828-8000
www.fortlauderdale.gov

WE BUILD COMMUNITY

Planned Improvements

- Installing a tidal valves
- Installing a new seawall
- Pavement Restoration
- Landscaping Restoration
- Installing new drainage pipe
- Installing new drainage structures

Cost

Expected Completion

Project Number

Contractor

Fort Lauderdale City Commission

Dean J. Trantalis
Mayor

John C. Herbst
Commissioner, District I

Steven Glassman
Commissioner, District II

Pamela Beastly-Pittman
Commissioner District III

Warren Sturman
Commissioner, District IV

Greg Chavarria
City Manager

[CONTRACTOR'S NAME]

[CONTRACTOR'S STREET ADDRESS]

[CONTRACTOR'S CITY, STATE AND ZIP]

[CONTRACTOR'S TELEPHONE NUMBER]

[CONTRACTOR'S FAX NUMBER]

MEMORANDUM

TO: **RESIDENTS OF [LOCATION OF CONSTRUCTION]**

DATE: **[CURRENT DATE]**

RE: **CONSTRUCTION IN YOUR AREA**

FROM: **[CONTRACTOR'S NAME}**

Construction in your area will commence on [date of construction commencement].

The construction area is from [boundary #1] to [boundary #2].

Access to the area will be limited at certain times due to the construction activities. We apologize for any inconvenience and we will do our best to accommodate access to residents.

Thank you,

[Contractor Name]

SECTION 01600

MATERIALS AND EQUIPMENT

PART 1 - GENERAL

1.01 THE REQUIREMENT

A. The word "Products," as used herein is defined to include purchased items for incorporation into the Work, regardless of whether specifically purchased for project or taken from Contractor's stock of previously purchased products.

B. The word "Materials," is defined as products which must be substantially cut, shaped, worked, mixed, finished, refined, or otherwise fabricated, processed, installed, or applied to form units of Work.

C. The word "Equipment" is defined as products with operational parts, regardless of whether motorized or manually operated, and particularly including products with service connections (wiring, piping, and other like items).

D. Definitions in this Section are not intended to negate the meaning of other terms used in Contract Documents, including "specialties," "systems," "structure," "finishes," "accessories," "furnishings," “special construction," and similar terms, which are self-explanatory and have recognized meanings in the construction industry.

1.02 QUALITY ASSURANCE

A. Source Limitations: To the greatest extent possible for each unit of Work, the Contractor shall provide products, materials, or equipment of a singular generic kind from a single source.

B. Compatibility of Options: Where more than one choice is available as options for Contractor's selection of a product, material, or equipment, the Contractor shall select an option which is compatible with other products, materials, or equipment already selected. Compatibility is a basic general requirement of product/material selections.

1.03 DESIGN

A. Equipment and appurtenances shall be designed in conformity with the ASME, AIEE, NEMA and other generally accepted applicable standards and shall be of rugged construction and sufficient strength to withstand all stresses which may occur during fabrication, testing, transportation, installation and all conditions of operation. All bearings and moving parts shall be adequately protected by bushings or other acceptable means against wear, and provision shall be made for adequate lubrication by readily accessible devices. Details shall be designed for appearance as well as utility. Protruding members, joints, corners, gear covers, etc., shall be finished in appearance.

B. All exposed welds on machinery shall be ground smooth and the corners of structural shapes shall be rounded or chamfered.

1.04 PRODUCT DELIVERY-STORAGE-HANDLING

A. The Contractor shall deliver, handle, and store products in accordance with supplier's written recommendations and by means and methods that will prevent damage, deterioration, and loss including theft. Delivery schedules shall be controlled to minimize long-term storage of products at site and overcrowding of construction spaces. In particular, the Contractor shall provide delivery/installation coordination to ensure minimum holding or storage times for products recognized to be flammable, hazardous, easily damaged, or sensitive to deterioration, theft, and other sources of loss.

1.05 TRANSPORTATION AND HANDLING

A. Products shall be transported by methods to avoid product damage and shall be delivered in undamaged condition in supplier's unopened containers or packaging, dry.

B. The Contractor shall provide equipment and personnel to handle products, materials, and equipment including those provided by City, by methods to prevent soiling and damage.

C. The Contractor shall provide additional protection during handling to prevent marring and otherwise damaging products, packaging, and surrounding surfaces.

1.06 STORAGE AND PROTECTION

A. Products shall be stored in accordance with supplier's written instructions, with seals and labels intact and legible. Sensitive products shall be stored in weather-tight enclosures and temperature and humidity ranges shall be maintained within tolerances required by supplier's written instructions.

B. For exterior storage of fabricated products, they shall be placed on sloped supports above ground. Products subject to deterioration shall be covered with impervious sheet covering; ventilation shall be provided to avoid condensation.

C. Loose granular materials shall be stored on solid surfaces in a well-drained area and shall be prevented from mixing with foreign matter.

D. Storage shall be arranged to provide access for inspection. The Contractor shall periodically inspect to assure products are undamaged and are maintained under required conditions.

E. Storage shall be arranged in a manner to provide access for maintenance of stored items and for inspection.

1.07 MAINTENANCE OF STORAGE

A. Stored products shall be periodically inspected on a scheduled basis.

B. The Contractor shall maintain a log of inspections and make said log available to the Engineer on request.

C. The Contractor shall verify that storage facilities comply with supplier's product storage requirements.

D. The Contractor shall verify that supplier-required environmental conditions are maintained continually.

E. The Contractor shall verify that surfaces of products exposed to the elements are not adversely affected and that any weathering of finishes is acceptable under requirements of Contract Documents.

1.08 MAINTENANCE OF EQUIPMENT STORAGE

A. For mechanical and electrical equipment in long-term storage, the Contractor shall provide a copy of the supplier's service instructions to accompany each item, with notice on enclosed instruction shown on exterior of package.

B. Equipment shall be serviced on a regularly scheduled basis, and a log of services shall be maintained and submitted as a record document to the Engineer.

1.09 LUBRICANTS

A. During testing and prior to acceptance, the Contractor shall furnish all lubricants necessary for the proper lubrication of all equipment furnished under this Contract.

1.10 SPECIAL TOOLS

A. For each type of equipment furnished by it, the Contractor shall provide a complete set of all special tools (including calibration and test equipment) which may be necessary for the adjustment, operation, maintenance and disassembly of such equipment.

B. Special tools shall be delivered at the same time as the equipment to which they pertain. The Contractor shall properly store and safeguard such special tools until completion of the Work, at which time they shall be delivered to the City.

1.11 PROTECTION AGAINST ELECTROLYSIS

A. Where dissimilar metals are used in conjunction with each other, suitable insulation shall be provided between adjoining surfaces so as to eliminate direct contact and any resultant electrolysis. The insulation shall be bituminous impregnated felt, heavy bituminous coatings, nonmetallic separators or washers, or other acceptable materials.

1.12 FASTENERS

A. All necessary bolts, anchor bolts, nuts, washers, plates and bolt sleeves shall be furnished by the Contractor in accordance herewith.

B. Bolts shall have suitable washers and, where so required, their nuts shall be hexagonal.

C. All bolts, anchor bolts, nuts, washers, plates, and bolt sleeves shall be Type 316 stainless steel unless otherwise specifically indicated or specified.

D. Unless otherwise specified, stud, tap, and machine bolts shall be of the best quality refined bar iron. Hexagonal nuts of the same quality of metal as the bolts shall be used.

1.13 SALVAGED AND EXCAVATED MATERIALS

A. In the absence of special provisions in other Sections of the Specifications, salvage materials, equipment or supplies that occur are the property of the City and shall be cleaned and stored as directed by the Engineer.

B. All excavated materials needed for backfilling operation shall be stored on site. Where additional area is needed for stockpiling, it shall be obtained by the Contractor.

PART 2 - PRODUCTS

(NOT USED)

PART 3 - EXECUTION

(NOT USED)

- END OF SECTION -

SECTION 01660

EQUIPMENT TESTING AND STARTUP

PART 1 - GENERAL

1.01 THE REQUIREMENT

A. Equipment testing and startup are requisite to satisfactory completion of the contract and, therefore, shall be completed within the contract time. The Contractor shall allow sufficient time in its construction schedule to complete testing, trouble shooting and start-up activities.

B. As construction of the project enters the final stages of completion, the Contractor shall, in accordance with the requirements set forth in the Contract Documents, attend to the following items:

1. Schedule equipment manufacturer's visits to site.

2. Calibration of instruments and controls.

3. Perform required testing, adjusting and balancing of project components.

4. Schedule start-up and initial operation.

5. Furnish skilled personnel during initiation operation to provide back-up maintenance services to equipment, as necessary.

6. Furnish operation and maintenance training to City's personnel per requirements of the Contract documents.

1.02 EQUIPMENT TESTING

A. The Contractor shall provide the services of an experienced and authorized representative of the supplier of each item of equipment (excluding minor items of equipment specifically exempted by the Engineer in writing), who shall visit the site of the Work and inspect, check, adjust if necessary, and approve the equipment installation. In each case, the Contractor shall arrange to have the supplier's representative revisit the job site as often as necessary until any and all trouble is corrected and the equipment installation and operation are satisfactory to the Engineer. The Contractor shall provide effective coordination of all parties necessary for complete system testing, including Suppliers, subcontractors, the Engineer, and the City.

B. The Contractor shall require that each supplier's representative furnish to the Engineer a written report addressed to the City, and copied to the Engineer, certifying that the equipment has been properly installed and lubricated, is in accurate alignment, is free from any undue stress imposed by connecting piping or anchor bolts, has been operated

satisfactorily under full-load conditions is ready for operation and the City's operating personnel have been instructed in the operation, maintenance and lubrication of the equipment.

C. The Contractor shall be responsible for scheduling all operations testing. The Contractor is advised that the Engineer and the City's operating personnel will witness operations testing.

D. The supplier's representative shall instruct the City's operating personnel in correct operation and maintenance procedures. The instruction shall demonstrate start-up, operation, control, adjustment, trouble-shooting, servicing, maintenance, and shutdown of each item of equipment. Such instruction shall be scheduled at a time arranged with the City at least 2 weeks in advance and shall be provided while the respective representative's equipment is fully operational. On-site instruction shall be given by qualified persons who have been made familiar in advance with the equipment and systems in the plant. The Contractor shall have submitted, and had accepted, the O&M Manuals (specified in the Section entitled "Submittals") prior to commencement of training.

E. The Contractor shall notify the Engineer at least 14 days in advance of each equipment test or City training session.

F. Training shall be provided to two separate shifts of the City's personnel. Training may occur anytime over a 24-hour period.

G. The Contractor shall furnish all personnel, power, water, chemicals, fuel, oil, grease, and all other necessary equipment, facilities, and services required for conducting the tests except as otherwise accepted by the Engineer.

1.03 STARTUP

A. The Contractor shall provide the effective coordination of all parties necessary for the successful startup, including suppliers, subcontractors, the Engineer, and the City.

B. It is not the intent of the Engineer to instruct the Contractor in the startup of the facilities; however, the Engineer will be available prior to and during startup to provide technical support to the Contractor.

C. The Contractor shall be required to startup the equipment, under direction of the Engineer and City, and operate it for a continuous 7-day (24 hours per day) period at design conditions. The Contractor shall be available at all times during this period to provide necessary maintenance support services as may be deemed necessary by the City and/or Engineer. This 7-day period must be successfully completed prior to the issuance of Substantial Completion.

D. Not less than 3 months prior to startup, the Contractor shall submit to the Engineer for review, a detailed schedule of operations which will be necessary for a successful initial operation and sustained period of operation for the duration of the required startup period

as specified in the Section entitled "Submittals."

E. The startup shall not be commenced until all required leakage tests, disinfection, and equipment tests, as applicable, have been completed to the satisfaction of the Engineer.

F. All defects in materials or quality which appear during this startup period shall be immediately corrected by the Contractor. Time lost for equipment repairs, wiring corrections, control point settings, or other reasons which actually interrupt the startup may, at the discretion of the Engineer, be justifiable cause for extending the startup test duration or beginning the startup test period again.

G. During the startup, the Contractor shall provide the services of authorized representatives of the suppliers, in addition to those services required under operations testing, as necessary, to correct faulty equipment operation.

PART 2 - PRODUCTS

(NOT USED)

PART 3 - EXECUTION

(NOT USED)

- END OF SECTION -

SECTION 01770

CONTRACT CLOSEOUT

PART 1 - GENERAL

1.01 THE REQUIREMENT

A. Comply with requirements stated in Conditions of the Contract and in Specifications for administrative procedures in closing out the WORK.

1.02 RELATED REQUIREMENTS

A. All applicable sections of the Technical Specifications.

B. Conditions of the Contract

1.03 SUBSTANTIAL COMPLETION

A. When CONTRACTOR considers the WORK is substantially complete, the CONTRACTOR shall submit to ENGINEER:

1. A written notice that the WORK, or designated portion thereof, is substantially complete.

2. A list of items to be completed or corrected.

3. Final as-builts per requirements of Section 01320 and City of Fort Lauderdale As-Built Plan Requirements.

B. Within a reasonable time after receipt of such notice, City and ENGINEER will make an inspection to determine the status of completion.

C. Should ENGINEER determine that the WORK is not substantially complete:

1. ENGINEER will promptly notify the CONTRACTOR in writing, giving the reasons therefore.

2. CONTRACTOR shall remedy the deficiencies in the WORK, and send a second written notice of substantial completion to the ENGINEER.

3. ENGINEER will reinspect the WORK.

D. When ENGINEER concurs that the WORK is substantially complete, ENGINEER will:

1. Prepare a Certificate of Substantial Completion accompanied by CONTRACTOR's list of items to be completed or corrected, as verified and amended by the ENGINEER.

2. Submit the Certificate to the CITY and the CONTRACTOR for their written acceptance of the responsibilities assigned to them in the Certificate.

1.04 FINAL INSPECTION

A. On completion of the WORK, the CONTRACTOR shall submit written certification that:

1. Contract Documents have been reviewed.

2. WORK has been inspected for compliance with Contract Documents.

3. WORK has been completed in accordance with Contract Documents.

4. Equipment and systems have been tested in the presence of the ENGINEER and are operational.

5. WORK is completed and ready for final inspection.

B. ENGINEER will make an inspection to verify the status of completion with reasonable promptness after receipt of such certification.

C. Should ENGINEER consider that the WORK is incomplete and defective:

1. ENGINEER will promptly notify the CONTRACTOR, in writing, listing the incomplete or defective WORK.

2. CONTRACTOR shall take immediate steps to remedy the stated deficiencies, and send a second written certification to ENGINEER that the WORK is complete.

3. ENGINEER will reinspect the WORK.

D. When the ENGINEER finds that the WORK is acceptable under the Contract Documents, the ENGINEER shall request the CONTRACTOR to make closeout submittals.

1.05 REINSPECTION FEES

A. Should CITY or ENGINEER perform reinspections due to failure of the WORK to comply with the claims of status of completion made by the CONTRACTOR:

1. CONTRACTOR will compensate CITY or ENGINEER for such additional services, and/or.

2. CITY will deduct the amount of such compensation from the final payment to the CONTRACTOR.

1.06 CONTRACTOR'S CLOSEOUT SUBMITTALS TO CITY’s REPRESENTATIVE

A. Evidence of compliance with requirements of governing authorities:

1. Certificate of Occupancy

2. Permit Closeout Certification

3. Certificates of Inspection

   a. Mechanical

   b. Electrical

   c. Other, as may be required

B. Project Record Documents: To requirements of Section 01320

C. Operating and Maintenance Data, Instructions to City's Personnel: To requirements of Section 01300

D. Guarantees and Bonds: To requirements of Section 01300

E. Evidence of Payment and Release of Liens: To requirements of General and Supplementary General Conditions

F. Certificate of Insurance for Products and Completed Operations

1.07 FINAL ADJUSTMENT OF ACCOUNTS

A. Submit a final statement of accounting to ENGINEER.

B. Statement shall reflect all adjustments to the Contract Sum:

1. The original Contract Sum

2. Additions and deductions resulting from:

   a. Previous Change Orders

   b. Allowances

   c. Unit Prices

   d. Deductions for uncorrected WORK

   e. Penalties and Bonuses

   f. Deductions for liquidated damages

   g. Deductions for reinspection payments

   h. Other adjustments

3. Total Contract Sum, as required

4. Previous payments

5. Sum remaining due

C. ENGINEER will prepare a final Change Order, reflecting approved adjustments to the Contract Sum which were not previously made by Change Orders.

1.08 FINAL APPLICATION FOR PAYMENT

A. CONTRACTOR shall submit the final Application for Payment in accordance with procedures and requirements stated in the Conditions of the Contract.

PART 2 - PRODUCTS

(NOT USED)

PART 3 - EXECUTION

(NOT USED)

- END OF SECTION -

SECTION 02015

MOBILIZATION AND DEMOBILIZATION

PART 1 - GENERAL

1.01 THE REQUIREMENT

A. The Work specified in this section consists of all Work necessary to move in personnel and equipment and prepare the site for construction, complete and to remove the same personnel and equipment from the site when construction is complete.

B. The limits of the Contractor's staging area and other applicable restrictions are shown on the Drawings.

PART 2 - PRODUCTS

2.01 TEMPORARY UTILITIES

A. The Contractor shall provide all temporary facilities required for performing the Work as specified in Section entitled "CONSTRUCTION FACILITIES AND TEMPORARY CONTROLS".

PART 3 - EXECUTION

3.01 LAYOUT

A. The Contractor shall set up construction facilities in a neat and orderly manner within designated areas as noted on the Staging Plan drawing of the Contract documents. It shall accomplish all required Work in accordance with applicable portions of these specifications and shall confine its operations to Work areas as shown on the drawings.

3.02 DEMOBILIZATION

A. At the completion of Work the Contractor shall remove its personnel, equipment, and temporary facilities from the site in a timely manner. The Contractor shall also be responsible for transporting all unused materials belonging to the City to a place of storage on site designated by the City and for removing from the site and disposing of all other materials and debris resulting from the construction. It shall then return all areas used for its activities to a condition as noted on the Contract documents.

- END OF SECTION -

SECTION 02100

EROSION AND SEDIMENTATION CONTROL – STORMWATER POLLUTION PREVENTION

PART 1 - GENERAL

1.01 DESCRIPTION

A. Provide all work and take all measures necessary to control soil erosion resulting from construction operations, prevent flow of sediment from construction site, and contain construction materials (including excavation and backfill) within protected working area as to prevent damage to any stream or wetlands.

B. The Contractor is responsible for creating a Stormwater Pollution Prevention Plan (SWPPP) for regulatory approval and enforcing its requirements in accordance with applicable Federal, State (F.A.C. Chapter 62-621), and local regulations. The complete SWPPP shall be submitted by the Contractor and approved by the regulatory agencies having jurisdiction before the start of construction. The Contractor shall provide all labor, materials, and equipment required in the prevention of environmental pollution and degradation and thereby for the protection of all environmental resources encountered during construction.

C. The Contractor is responsible for all permitting and reporting forms as required through the Florida Department of Environmental Protection (FDEP) – National Pollutant Discharge Elimination System (NPDES) program for construction activities.

D. Temporary erosion controls may include, but are not limited to, mulching, netting, and watering on site surfaces and spoil and borrow area surfaces and providing interceptor ditches at ends of berms and at those locations that will ensure erosion during construction will be either eliminated or maintained within acceptable limits as established by the City.

E. Temporary sedimentation controls may include, but are not limited to, silt dams, barriers, turbidity curtains, hay bales, drop inlet protection, curb inlet protection, and appurtenances at the foot of sloped surfaces and other areas that will ensure sedimentation pollution will be either eliminated or maintained within acceptable limits as established by the City.

1.02 REFERENCE

A. “Guidelines for Erosion and Sediment Control, Planning and Implementation” published by the United States Environmental Protection Agency.

B. “Processes, Procedures and Methods to Control Pollution Resulting from all Construction Activity”, published by the United States Environmental Protection Agency.

C. “The Florida Stormwater, Erosion, and Sedimentation Control Inspector’s Manual” published by the Florida Department of Environmental Protection.

D. NPDES Stormwater Program: www.dept.state.fl.us/water/stormwater/npdes/

1.03 SUBMITTALS

A. Contractor shall provide a copy of all permit applications, approvals, and reporting documentation submitted in support to SWPPP.

B. Contractor shall submit a copy of the SWPPP in accordance with Section 01300.

1.04 QUALITY ASSURANCE

A. Operations restricted to areas of work indicated on drawings and area which must be entered for construction of temporary or permanent facilities.

B. Engineer has authority to limit surface area of erodible earth material exposed by clearing and grubbing, excavation, borrow and fill operations and to direct immediate permanent or temporary pollution control measures to prevent contamination of any stream or wetlands, including construction of temporary berms, dikes, dams, sediment basins, sediment traps, slope drains, and use of temporary mulches, mats, or other control devices or methods as necessary to control erosion.

PART 2 - PRODUCTS

2.01 GENERAL

A. All products shall be in accordance with Drawings and approved SWPPP.

PART 3 - EXECUTION

3.01 GENERAL

A. Prior to the start of work, provide and install the site sedimentation and erosion control as indicated on the Drawings and the Contractor prepared SWPPP and as required by applicable regulations. Maintain such system for the duration of the project.

B. Should any of the temporary erosion and sediment control measures employed by the Contractor fail to produce results that comply with the requirements of the City or SWPPP, Contractor shall immediately take any and all necessary steps to correct the deficiency at his own expense.

C. Construct earth berms or diversions to intercept and divert runoff water from critical areas.

D. Discharge silt-laden water from excavations onto filter fabric mat and/or baled hay or straw sediment traps to ensure that only sediment-free water is returned to watercourses.

E. Do not place excavated soil material adjacent to watercourse in manner that will cause it to wash away by high water or runoff.

F. Prevent damage to vegetation by excessive watering or silt accumulation in the discharge area.

G. Do not dump soiled material into any streams, wetlands, surface waters, or unspecified

locations.

H. Do not pump silt-laden water from trenches or excavations into surface waters, streams, wetlands, or natural or man-made channels leading thereto.

I. Prevent damage to vegetation adjacent to or outside of construction area limits.

J. Do not dispose of trees, brush, debris, paints, chemicals, asphalt products, concrete curing compounds, fuels, lubricants, insecticides, washwater from concrete trucks or hydroseeders, or any other pollutant in streams, wetlands, surface waters, or natural or man-made channels leading thereto, or unspecified locations.

K. Do not alter flow line of any stream unless indicated or specified.

L. All exposed graded, cleared, filled, etc. land to remain shall be stabilized with sod, filter fabric and/or vegetation acceptable to the City.

3.02 Contractor REQUIREMENTS

A. The Contractor is notified that the City of Fort Lauderdale has submitted a Notice of Intent to Use Generic Permit for Stormwater Discharge from Large and Small Construction Activities, (FDEP Form 62-621.300(4)(b)).

B. The Contractor shall provide all necessary labor and materials to maintain compliance with the permit requirements as found in FDEP document 62-621.300(4)(a) and the preliminary Stormwater Pollution Prevention Plan (SWPPP). These documents are included in the Appendices of the contract documents for convenience.

C. The SWPPP submitted by the City is preliminary in nature. The Contractor shall be responsible for preparing, submitting, and complying with a final SWPPP in full accordance with all regulatory requirements

3.03 RETENTION OF RECORDS

A. Retain a copy of the SWPPP at the construction site and at the Contractor's office from the date that it became effective to the date of project completion.

B. At project closeout, submit to the City all NPDES forms and certifications, as well as a copy of the SWPPP. Stormwater pollution prevention records will be retained by the City for a period of three (3) years from the date of project completion.

3.04 REQUIRED NOTICES

A. The following notices shall be posted by the Contractor within 60 days of a notice to proceed until the date of project final completion:

1. A copy of the submitted NOI and a brief project description, as given in the SWPPP, shall be posted at the construction site and at the Contractor's office in a prominent place for public viewing.

2. Notice to drivers of equipment and vehicles, instructing them to stop, check and clean tires of debris and mud before driving onto traffic lanes. Post such notices at every stabilized construction exit area.

3. Post a notice of waste disposal procedures in an easily visible location on site.

4. Notice of hazardous material handling and emergency procedures shall be posted with the NOI on site. Keep copies of Material Safety Data Sheets at a location on site that is known to all personnel.

- END OF SECTION -

SECTION 02200

SITE PREPARATION

PART 1 - GENERAL

1.01 DEFINITIONS

A. Interfering or Objectionable Material: Trash, rubbish, and junk; vegetation and other organic matter, whether alive, dead, or decaying; topsoil.

B. Clearing: Removal of interfering or objectionable material lying on or protruding above ground surface.

C. Grubbing: Removal of vegetation and other organic matter including stumps, buried logs, and roots greater than 2 inches caliper to a depth of 12 inches below subgrade.

D. Scalping: Removal of sod without removing more than upper 3 inches of topsoil.

E. Stripping: Removal of topsoil remaining after applicable scalping is completed.

F. Project Limits: Areas, as specified, within which Work is to be performed.

1.02 QUALITY ASSURANCE

A. Obtain Engineer's approval of staked clearing, grubbing, and stripping limits, prior to commencing clearing, grubbing, and stripping.

1.03 SCHEDULING AND SEQUENCING

A. Prepare site only after adequate erosion and sediment controls are in place. Limit areas exposed uncontrolled to erosion during installation of temporary erosion and sediment controls.

PART 2 - MATERIALS

(NOT USED)

PART 3 - EXECUTION

3.01 GENERAL

A. Clear, grub, and strip areas actually needed for waste disposal, borrow, or site improvements within limits specified.

B. Property obstructions which are to remain in-place, such as buildings, sewers, drains, water or gas pipes, bridges, etc., are to be carefully protected from damage.

C. Do not injure or deface vegetation that is not designated for removal. All branches potentially interfering with construction operations shall be pruned prior to starting work and following approval of the City and the City of Fort Lauderdale Urban Forester.

3.02 LIMITS

A. As Follows, but not to extend beyond project limits.

1. Excavation Including Trenches: 5 feet beyond top of cut slopes or shored wall.
2. Fill:
   a. Clearing and Grubbing: 5 feet beyond toe of permanent fill.
   b. Stripping and Scalping: 2 feet beyond toe of permanent fill.
3. Waste Disposal:
   a. Clearing: 5 feet beyond perimeter.
   b. Scalping and Stripping: Not required.
   c. Grubbing: Around perimeter as necessary for neat finished appearance.
4. Overhead Utilities:
   a. Clearing, Grubbing, Scalping, and Stripping: Wherever grading is required, including borrow pits, ditches, etc.
   b. Other Areas: As shown.

B. Remove rubbish, trash, and junk from entire area within Project limits.

3.03 TEMPORARY REMOVAL OF INTERFERING PLANTINGS

A. Remove and store, as specified in the Contract Documents, trees, plants, and ground covers, shrubs and trees that are not designated for removal but do interfere with construction or could be damaged by construction activities.

B. Photograph and document location, orientation, and condition of each plant prior to its removal. Record sufficient information to uniquely identify each plant removed and to assure accurate replacement.

3.04 CLEARING

A. Clear areas within limits specified.

B. Fell trees so that they fall away from facilities and vegetation not designated for removal.

C. Cut stumps not designated for grubbing 12 inches below the ground surface.

D. Cut off shrubs, brush, weeds, and grasses to within 2 inches of ground surface.

3.05 GRUBBING

A. Grub areas within limits specified.

3.06 SCALPING

A. Do not remove sod until after clearing and grubbing is completed and resulting debris is removed.

B. Scalp areas within limits specified.

3.07 STRIPPING

A. Do not remove topsoil until after scalping is completed.

B. Strip areas within limits to minimum depths specified. Do not remove subsoil with topsoil.

C. Stockpile strippings, meeting requirements of Section 02911, Soil Preparation, for topsoil, separately from other excavated material.

3.08 TREE REMOVAL OUTSIDE CLEARING LIMITS

A. Remove Within Project Limits:

1. Dead, dying, leaning, or otherwise unsound trees that may strike and damage Project facilities in falling.

2. Trees designated by Engineer.

3. Cut stumps off flush with ground, remove debris, grind stump and if disturbed, restore surrounding area to its original condition.

3.09 TREE TOPPING

A. Top trees designated by the City so remaining portion will not strike facilities in falling. Where topping will remove more than 1/2 of a tree's crown, remove entire tree.

B. Treat wounds resulting from topping in accordance with standard horticultural practice to preserve the natural character of the tree.

3.10 PRUNING

A. Remove branches below the following heights:

1. Sixteen feet above roadways and shoulders.

2. Nine feet above sidewalks.

3. Six feet above roofs.

B. Prune only after planting and in accordance with standard horticultural practice to preserve the natural character of the plant. Perform in presence of the Engineer. Remove all dead wood, suckers, and broken or badly bruised branches. Use only clean, sharp tools. Do not cut lead shoot.

3.11 DISPOSAL

A. Clearing and Grubbing Debris:

1. Woody debris may be chipped. Chips may be sold to Contractor's benefit or used for landscaping onsite as mulch or uniformly mixed with topsoil, provided that resulting mix will be fertile and not support combustion. Maximum dimensions of chipped material used onsite shall be 1/4-inch by 2 inch. Dispose of chips that are unsaleable or unsuitable for landscaping or other uses with unchipped debris.

2. Limit offsite disposal of clearing and grubbing debris to locations that are approved by federal, state, and local authorities, and that will not be visible from Project.

B. Scalpings: As specified for clearing and grubbing debris.

C. Strippings:

1. Dispose of strippings that are unsuitable for topsoil or that exceed quantity required for topsoil offsite or in waste disposal areas approved by Engineer.

2. Stockpile topsoil in sufficient quantity to meet Project needs. Dispose of excess strippings as specified for clearing and grubbing.

- END OF SECTION -

SECTION 02220

DEMOLITION

PART 1 - GENERAL

1.01 THE REQUIREMENT

A. Removal and disposal of structures, pavement surfaces, sidewalks, underground obstructions, and other facilities necessary to prepare the area for construction of proposed facilities.

PART 2 - MATERIALS

(NOT USED)

PART 3 - EXECUTION

3.01 GENERAL

A. Utilities:

1. Notify City or appropriate utilities to turn off affected services before starting demolition or alterations. Provide not less than seven (7) days' notice to the owner of the utility prior to the shutdown.

2. Remove utility lines exposed by demolition excavation.

3. Remove electric, sanitary, and storm drainage adjacent to buildings to be demolished.

4. Excavate utility lines serving buildings to be demolished and provide a permanent leak-proof closure for water and gas lines.

5. Plug sewerlines at locations shown or at limits of excavation if not shown with concrete length of plug, 5 feet minimum to prevent groundwater infiltrating sewer systems.

B. Removal and Storage of Equipment for Reuse:

1. Do not remove equipment and materials without approval of Engineer.

2. Properly store and maintain equipment and materials in same condition as when removed.

3. Engineer will determine condition of equipment and materials prior to removal.

3.02 DEMOLITION

A. Additional quantities of new construction or additional work caused by the demolition, beyond the limits, will be performed at the Contractor's expense.

B. Drawings define minimum portion of structures to be removed. Unless otherwise shown, rough cuts or breaks may be made exceeding limits of demolition shown. Provide sawcut at limits of all pavement removal. Structures shall be removed in such a way as to leave no obstructions to any proposed new structures or to any waterways.

C. Core drill floor slabs, catch basins, and other concrete improvements to remain in place below ground, or break holes at structure's lowest point to allow water to freely migrate through.

D. Remove piping from areas to be backfilled. Pipe, valves, and fittings adjacent to those to be removed may also be removed as salvage.

E. Remove all materials associated with existing equipment that is to be removed or relocated.

F. Cut off concealed or embedded conduit, boxes, or other materials a minimum of 2” inches below final finished surface.

G. Extract existing piling, which conflict with new piles, prior to driving new piles.

3.03 DISPOSAL

A. Dispose of debris and other nonsalvaged materials offsite in licensed landfills.

3.04 BACKFILLING

A. Demolished Areas: Backfill to existing ground level or foundation level of new construction.

B. Backfill Material and Compaction:

1. Conform to Sections 02222 and 02224.

2. Do not use demolition debris as backfill material.

3.05 SALVAGE

A. Equipment and materials, including piping within the limits of demolition, unless otherwise specified, will become the property of Contractor.

B. Any material designated to remain by the City shall be stored in neat piles in a location directed by the City.

C. Fire Hydrants:

1. Salvage for future use by City.

2. Remove and leave for City in location directed by the City.

- END OF SECTION -

SECTION 02222

EXCAVATION AND BACKFILL FOR UTILITIES

PART 1 - GENERAL

1.01 THE REQUIREMENT

A. Excavate, grade and backfill as required for underground piping systems and appurtenances as shown on the Drawings and specified herein.

B. All excavation for the project is unclassified.

1.02 RELATED WORK SPECIFIED ELSEWHERE

A. Division 15

B. Division 16

1.03 REFERENCE SPECIFICATIONS, CODES, AND STANDARDS

A. Codes: All codes, as referenced herein, are specified in Section 01090, "Reference Standards".

B. Commercial Standards:

ASTM D 422	Standard Test Method for Particle-Size Analysis of Soils.
ASTM D 698	Standard Test Methods for Laboratory Compaction Characteristics of Soil Using Standard Effort.
ASTM D 1556	Standard Test Method for Density and Unit Weight of Soil in Place by the Sand-Cone Method.
ASTM D 1557	Standard Test Methods for Laboratory Compaction Characteristics of Soil Using Modified Effort.
ASTM D 2419	Standard Test Method for Sand Equivalent Value of Soils and Fine Aggregate.
ASTM D6938	Standard Test Method for In-Place Density and Water Content of Soil and Soil-Aggregate by Nuclear Methods (Shallow Depth)

1.04 SUBMITTALS

A. General: Submit information and samples to the Engineer for review as specified herein in accordance with the Section entitled "Submittals".

B. Dewatering: The Contractor shall submit to the Engineer its proposed methods of handling trench water and the locations at which the water will be disposed of. Methods shall be acceptable to the Engineer before starting the excavation

C. Bedding and Backfill Materials: The Contractor shall notify the Engineer of the off-site sources of bedding and backfill materials.

1. Submit to the Engineer a representative sample weighing approximately 25 lbs. The sample shall be delivered to a location at the work site determined by the Engineer.

2. The Contractor shall notify the Engineer in writing of the sources of each material at least ten calendar days prior to the anticipated use of the materials.

D. Sheeting System: Drawings of the sheeting system and design computations shall be submitted to the Engineer; however, the review of these drawings shall in no way relieve the Contractor of the responsibility to provide a safe and satisfactory sheeting and shoring system. Sheeting and shoring shall be designed by the Contractor, and the proposed design shall be sealed by a Professional Engineer registered in the State of Florida. If the Engineer is of the opinion that at any point sufficient or proper supports have not been provided, it may order additional supports put in at the Contractor's expense.

E. Dewatering Permits: If the quantity or nature of water withdrawn requires approval/permits from regulatory agencies, the Contractor shall procure such permits at its expense and submit copies to the Engineer before commencing the work.

1.05 QUALITY CONTROL

A. An independent testing laboratory will be retained by the City to do appropriate testing as described in the Section entitled "Quality Control". The Contractor shall schedule its work so as to permit a reasonable time for testing before placing succeeding lifts and shall keep the laboratory informed of his progress. A minimum of 48 hours of notice shall be provided to the testing laboratory to mobilize its activities.

B. Field Density Testing Frequency for Pipeline Backfill: The frequency of the field density testing shall be in accordance with the notes on the Drawings. If the Drawings do not indicate a frequency then field density testing shall be as follows:

1. Pipe installed: for each layer (i.e., lift) of compacted material perform a minimum of one density test at 150-foot interval.

1.06 SUBSURFACE INFORMATION

A. A separate geotechnical report is provided for information purposes with the Contract Documents. The report identifies properties below grade and also offers recommendations for foundation design, primarily for use of the Engineer. The recommendations shall not be construed as requirements of the Contract.

B. The City and the Engineer will not assume responsibility for variations of sub-soil quality or conditions at locations other than places shown and at the time the geotechnical investigation was made. The Contractor shall examine the site and review the available geotechnical report or undertake its own subsurface investigation prior to submitting its bid, taking into consideration all conditions that may affect its work.

1.07 GROUNDWATER

A. The Contractor shall be responsible for anticipating groundwater conditions and shall provide positive control measures as required. Such measures shall ensure stability of excavations, groundwater pressure control, prevention of tanks, pipes, and other structures from being lifted by hydrostatic pressures, and avoiding the disturbance of subgrade bearing materials.

B. The Contractor shall be responsible for obtaining all permits required for dewatering operations.

1.08 TRENCH SAFETY ACT COMPLIANCE

A. The Contractor by signing and executing the contract is, in writing, assuring that it will perform any trench excavation in accordance with the Florida Trench Safety Act, Section 553.60 et. seq. The Contractor has further identified the separate item(s) of cost of compliance with the applicable trench safety standards as well as the method of compliance as noted in the "Bid Forms" Section of the Contract front-end documents.

B. The Contractor acknowledges that this cost is included in the applicable items of the Proposal and Contract and in the Grand Total Bid and Contract Price.

C. The Contractor is, and the City and Engineer are not, responsible to review or assess the Contractor's safety precautions, programs or costs, or the means, methods, techniques or technique adequacy, reasonableness of cost, sequences or procedures of any safety precaution, program or cost, including but not limited to, compliance with any and all requirements of Florida Statute Section 553.60 et. seq. cited as the "Trench Safety Act". The Contractor is, and the City and Engineer are not, responsible to determine if any safety or safety related standards apply to the project, including but not limited to, the "Trench Safety Act".

1.09 PROTECTION OF PROPERTY AND STRUCTURES

A. The Contractor shall, at its own expense, sustain in place and protect from direct or indirect injury, all pipes, poles, conduits, walls, buildings, and all other structures, utilities, and property in the vicinity of its Work. Such sustaining shall be done by the Contractor. The Contractor shall take all risks attending the presence or proximity of pipes, poles, conduits, walls, buildings, and all other structures, utilities, and its Work. It shall be responsible for all damage, and assume all expenses, for direct or indirect injury and damage, caused by its Work, to any such pipe, structures, etc., or to any person or property, by reason of injury to them, whether or not such structures, etc., are shown on the Drawings.

B. Barriers shall be placed at each end of all excavations and at such places as may be necessary along excavations to warn all pedestrian and vehicular traffic of such excavations. Barricades with flashing lights shall also be placed along excavation from sunset each day to sunrise of the next day until such excavation is entirely refilled, compacted, and paved. All excavations shall be barricaded where required to meet OSHA, local and Federal Code requirements, in such a manner to prevent persons from falling or walking into any excavation within the site fenced property limits.

PART 2 - PRODUCTS

2.01 MATERIALS

A. General: Materials shall be furnished as required from on-site excavations or from acceptable off-site sources as required. The Contractor shall notify the Engineer in writing of the sources of each material at least ten calendar days prior to the anticipated use of the materials.

2.02 BEDDING

A. Pipe Bedding: In general, clean sandy materials excavated from the utility trench, that is free from organics, clay and construction debris, can be used as pipe bedding when construction is in a dry condition and when the bedding is not sided by muck. Pipe bedding material shall be able to pass through a 3/4-inch sieve. Separation of suitable material for pipe bedding from other material shall be made during the excavation.

B. Sand shall be used for all copper and other service lines.

C. In the case of a “dry” installation, sand shall be used for PVC and ductile iron pipe where the bottom of the trench is located in the limestone zone.

D. In the case of a “wet” installation, pearock shall be used for PVC and ductile iron pipe where the bottom of the trench is located in the limestone zone.

E. Precast concrete items shall use crushed stone.

2.03 PEAROCK

A. Pearock shall consist of hard, durable particles of proper size and gradation, and shall be free from organic material, wood, trash, sand, loam, clay, excess fines, and other deleterious materials. Refer to specification section entitled “Earthwork” for size and gradation conformance requirements.

2.04 CRUSHED STONE (3/4-INCH ROCK)

A. Crushed stone shall consist of hard, durable, subangular particles of proper size and gradation, and shall be free from organic material, wood, trash, sand, loam, clay, excess fines, and other deleterious materials. Refer to specification section entitled “Earthwork” for size and gradation conformance requirements.

2.05 SAND

A. Sand shall be used for bedding polyvinyl chloride, fiberglass, HDPE and other plastic pipe when installed under dry trench conditions. Refer to specification section entitled “Earthwork” for size and gradation conformance requirements.

2.06 SELECT BACKFILL

A. Select Backfill: It is the intent of these specifications to obtain clean sandy material passing through a 3/4-inch sieve as select backfill material for utility and structural applications.

B. At locations where subsurface preparations for structures have been performed under this or other previous construction contracts, clean excavated material (structural fill) may be used as select backfill. Any excess fill shall be disposed of off-site by the Contractor.

2.07 GENERAL BACKFILL

A. General backfill (for grading applications) shall be placed above the select backfill. General backfill shall be clean granular soil, free of organics or other deleterious material. Refer to specification section entitled “Earthwork” for size and gradation conformance requirements.

B. General backfill used under roadways shall be compatible with the materials and compaction specified under the Sections entitled “Asphaltic Pavement” and “Concrete Curb and Sidewalk”.

PART 3 - EXECUTION

3.01 EXCAVATION

A. The Contractor shall perform all excavation of every description and of whatever substance encountered, to the dimensions, grades and depths shown on the Drawings, or as directed. For projects within the treatment plant, all excavations shall be made by open cut unless shown otherwise on the Drawings. For projects within the right-of-way, unless shown otherwise on the Drawings, all excavations shall be made by open cut, except for service connections to houses located across the road from the watermain, where directional boring shall be used. All existing utilities such as pipes, poles and structures shall be carefully located, supported and protected from injury; in case of damage, they shall be restored at the Contractor's expense.

B. Pipe trenches for piping shall be excavated to a width within the limits of the top of the pipe and the trench bottom so as to provide a clearance on each side of the pipe barrel, measured to the face of the excavation, or sheeting if used as defined in specification section entitled Earthwork”. Excavation depths in other types of materials and conditions shall be made as hereinafter specified.

C. In areas where trench widths are not limited by right-of-way and/or easement widths, property line restrictions, existing adjacent improvements, including pavements, structures and other utilities, and maintenance of traffic, the trench sides may be sloped to a stable angle of repose of the excavated material but only from a point one foot above the crown of the pipe. A substantially and safely constructed movable shield, "box" or "mule" may be used in place of sheeting when the trench is opened immediately ahead of the shield and closed immediately behind the shield as pipe laying proceeds inside the shield.

D. Ladders or steps shall be provided for and used by Workmen to enter and leave trenches, in accordance with OSHA requirements.

E. Excavation for appurtenances shall be sufficient to provide a clearance between their outer surfaces and the face of the excavation or sheeting, if used, of not less than 12 inches.

F. Excavated unsuitable material shall be removed from the site and disposed of by the Contractor. Materials removed from the trenches shall be stored and in such a manner that will not interfere unduly with any on-site operations, traffic on public roadways and sidewalks and shall not be placed on private property. In congested areas, such materials as cannot be stored adjacent to the trench or used immediately as backfill shall be removed to other convenient places of storage acceptable to the City at the Contractor's expense.

G. Excavated material that is suitable for use as backfill shall be used in areas where sufficient material is not available from the excavation. Suitable material in excess of backfill requirements shall be either used on the site as directed by the Engineer or disposed of the Contractor.

H. Barriers shall be placed at excavations in accordance with OSHA requirements.

3.02 SHEETING AND BRACING

A. The Contractor shall furnish, place and maintain sheeting and bracing to support sides of the excavation as necessary to provide safe working conditions in accordance with OSHA requirements, and to protect pipes, structures and other Work from possible damage. Where wood sheeting or certain designs of steel sheeting are used, the sheeting shall be cut off at a level of 2 feet above the top of the installed pipe and that portion below the level shall be left in place. If interlocking steel sheeting is used, it may be removed providing removal can be accomplished without disturbing the bedding, pipe or alignment of the pipe. Any damage to the pipe bedding, pipe or alignment of the constructed utility caused by the removal of sheeting shall be cause for rejection of the affected portion of the work. The City may permit sheeting to be left in place at the request and expense of the Contractor, or the City may order him in writing to leave in place, for the preventing of damage to structures or property. Payment for sheeting ordered to remain in place shall be paid for at a negotiated price.

B. If the Engineer is of the opinion that at any point sufficient or proper supports, have not be provided, he may order additional supports put in at the Contractor’s expense. The Contractor shall be responsible for the adequacy of all sheeting used and for all damage resulting from sheeting and bracing failure or from placing, maintaining and removing it.

3.03 REMOVAL OF WATER

A. General: It is a basic requirement of these Specifications unless otherwise authorized per Article 3.10 that excavations shall be free from water before pipe or structures are installed.

B. The Contractor shall provide pumps, and other appurtenant equipment necessary to remove and maintain water at such a level as to permit construction in a dry condition. The Contractor shall continue dewatering operations until backfilling has progressed to a sufficient depth over the pipe to prevent flotation or movement of the pipe in the trench or so that it is above the water table. If at any point during the dewatering operation it is

determined that fine material is being removed from the excavation sidewalls, the dewatering operation shall be stopped. If any of the subgrade or underlying material is disturbed by movement of groundwater, surface water, or any other reason, it shall be replaced at the Contractor's expense with crushed stone or gravel.

C. The Contractor shall use dewatering systems that include automatic starting devices, and standby pumps that will ensure continuous dewatering in the event of an outage of one or more pumps.

D. Disposal: Water from the trenches and excavation shall be disposed of in such a manner as will not cause injury to public health, to public or private property, to the Work completed or in progress, to the surface of the streets, cause any interference with the use of the same by the public, or cause pollution of any waterway or stream. The Contractor shall submit his proposed methods of handling trench water and locations at which the water will be disposed of to the Engineer for review and shall receive acceptance before starting the excavation. Disposal to any surface water body will require silt screens to prevent any degration in the water body. The Contractor shall have responsibility for acquiring all necessary permits for disposal.

3.04 TRENCH STABILIZATION

A. No claim for extras, or additional payment will be considered for cost incurred in the stabilization of trench bottoms which are rendered soft or unstable as a result of construction methods, such as improper or inadequate sheeting, dewatering or other causes. In no event shall pipe be installed when such conditions exist and the Contractor shall correct such conditions so as to provide proper bedding or foundations for the proposed installation at no additional cost to the City before placing the pipe or structures.

3.05 PIPE BEDDING

A. Pipe trenches shall be excavated as described in specification section entitled "Earthwork". The resulting excavation shall be backfilled with acceptable pipe bedding material, up to the level of the centerline of the proposed pipe barrel. This backfill shall be tamped and compacted to provide a proper bedding for the pipe and shall then be shaped to receive the pipe. Bedding shall be provided under the branch of all fittings to furnish adequate support and bearing under the fitting.

B. Any over excavation below the levels required for installation of the pipe shall be backfilled with acceptable bedding material, tamped, compacted and shaped to provide proper support for the proposed pipe, at the Contractor's expense.

3.06 BACKFILL

A. Pipeline trenches shall be backfilled to a level 12 inches above the top of the pipe with select backfill obtained from the trench excavation. When placed in the dry, such material shall be placed in 6-inch layers, each compacted to the densities specified in Article 3.07. Only hand operated mechanical compacting equipment shall be used within six inches of the installed pipe.

B. After the initial portion of backfill has been placed as specified above, and after all excess water has completely drained from the trench, backfilling of the remainder of the trench may proceed. The remainder of the backfill shall be selected material obtained from the excavation and shall be placed in horizontal layers, the depth of which shall not exceed the ability of the compaction equipment employed, and in no event shall exceed a depth of 9 inches. Each layer shall be moistened, tamped, puddled, rolled or compacted to the densities specified in Article 3.07.

3.07 COMPACTION AND DENSITIES

A. Compaction of backfill shall be per specification section entitled “Earthwork”. More thorough compaction may be required when Work is performed in other regulatory agencies jurisdictions, such as the FDOT. Methods of control and testing of backfill construction are described in specification section entitled “Earthwork”.

B. Testing: Laboratory and field density tests, which in the opinion of the Engineer are necessary to establish compliance with the compaction requirements of these Specifications, shall be ordered by the Engineer. The Contractor shall coordinate and cooperate with the testing laboratory. The testing program will be implemented by the Engineer establishing depths and locations of tests. Modifications to the program will be made as job conditions change.

C. Trench backfill which does not comply with the specified densities, as indicated by such tests, shall be reworked and recompacted until the required compaction is secured, at no additional cost to the City. The costs for retesting such Work shall be paid for by the Contractor.

3.08 ADDITIONAL EXCAVATION AND BACKFILL

A. Where organic material, such as roots, muck, or other vegetable matter, or other material which, in the opinion of the Engineer, will result in unsatisfactory foundation conditions, is encountered below the level of the proposed pipe bedding material, it shall be removed to a depth of two feet below the outside bottom of the pipe or to a greater depth as directed by the Engineer and removed from the site. Sheeting shall be installed if necessary, to maintain pipe trenches within the limits identified by the Engineer. The resulting excavation shall be backfilled with suitable backfill material, placed in 12-inch layers, tamped and compacted up to the level of the bottom of the proposed pipe bedding material. Sufficient compaction of this material shall be performed to protect the proposed pipe against settlement. Lean concrete may be used in lieu of backfill when pipe installation is in the wet or at the Contractor’s option. Construction shall then proceed in accordance with the provisions of Article 3.05 “Pipe Bedding”.

B. Additional excavation (more than two feet below the pipe) shall be performed when ordered by the Engineer. Where organic or other material is encountered in the excavation, the Contractor shall bring the condition to the attention of the Engineer and obtain his determination as to whether or not the material will require removal, prior to preparing the pipe bedding. The excavation of material up to a depth of two feet below the outside bottom is an incidental item of construction and the Work shall be done at no additional cost to the City. Where ordered by the Engineer, excavation greater than two feet below the pipe and additional backfill will be compensated by the City.

3.09 FINE GRADING

A. After piping trenches backfilled, the disturbed areas of the site shall be fine graded. Any lumber, undesirable materials and rocks larger than the 3-inch size shall be removed from the surface. The completed surface shall be to the preconstruction elevation unless otherwise directed by the City. Minor adjustments to line and grade may be required as the work progresses in order to satisfy field conditions.

3.10 ALTERNATE METHOD OF CONSTRUCTION

A. Use of This Method: A combination of conditions in the substrate, water table, or method of disposal may be encountered during the course of the work which makes dewatering impossible, or only possible through the use of unusual methods, the cost of which is excessive. When such conditions are encountered, but only after all reasonable means (pumps, well points, etc.) to dewater the excavation have been employed without success, the Contractor, may request to employ the following Alternate Method of Construction. The concurrence of the Engineer shall be obtained in writing and shall limit the use of the alternate method of construction to such specific portions of the Work as the Engineer shall determine.

B. The requirements set forth in other sections of these Specifications shall establish the required standards of construction quality for this work. Use of the alternate method of construction described hereinafter shall in no way be construed as relieving the Contractor of the work. No additional payment will be made to the Contractor for excavation, backfill, sheeting or any cost incurred for Work or materials, or any other costs incurred as a result of the use of this alternate method of construction. The prices established in the Proposal shall be for full payment for the various items of work.

C. Subject to all the requirements stated herein, including written acceptance of the Engineer, construction will be permitted in accordance with the following specifications. All requirements of these Specifications shall apply to this construction unless otherwise specifically modified herein.

D. Removal of Water: The installation of pipe and appurtenances under water will be permitted and the requirements of Article 3.03 will be waived.

E. Excavation shall be performed in accordance with Article 3.01.

F. Pipe Bedding: Pipe bedding shall be placed from 6 inches below the outside bottom of the proposed pipe barrel up to the centerline of the pipe barrel. The bedding material shall be pearock as specified in Article 2.03 "Pearock". Limerock screenings, sand or other fine organic material shall not be used.

G. The bedding material shall be placed and then be shaped to receive the pipe at the intended elevation. Bedding shall be provided under the branch of all fittings to furnish adequate support and bearing under the fitting.

H. Backfill: After the pipe is installed, backfilling shall proceed in accordance with the provisions of Article 3.06 "Backfill" and 3.07 "Compaction and Densities". Select backfill material shall be used to backfill around the pipe and to a level one foot above the crown of the pipe. Under no circumstances will material other than select backfill or specified pipe bedding material be considered satisfactory for this purpose.

I. If the Alternate Method of Construction is used, all backfill material, including specified pipe bedding material, shall be carefully lifted into the trench and not released to fall freely therein until the bucket or container is at or just above water level. Under no circumstances will backfill material be dumped or pushed into the trenches containing water. Below existing water level, the backfill material shall be carefully rammed into place in uniform layers, of equal depth on each side of the pipe, up to the water level. Above the water level, backfill material shall be placed and compacted for normal backfill as previously specified.

3.09 RESTORATION OF EXISTING SURFACES

A. Restore all grassed areas disturbed by the trenching operations by resodding in accordance with the Section entitled “Sodding” or the Section entitled “Landscaping”.

B. Restore all asphaltic concrete pavement areas disturbed by the trenching operations in accordance with the Section entitled “Asphaltic Concrete Pavement.”

C. Restore all concrete pavement, curbs, and sidewalks disturbed by the trenching operations in accordance with the Section entitled “Concrete Curbs and Sidewalks”.

- END OF SECTION -

SECTION 02224

EXCAVATION AND BACKFILL FOR STRUCTURES

PART 1 - GENERAL

1.01 THE REQUIREMENT

A. This Section includes, except as elsewhere provided, excavation, filling and compacting within the limits defined on the Contract Drawings for complete construction of structures for this project.

B. All excavation for the project is unclassified.

1.02 RELATED WORK SPECIFIED ELSEWHERE

A. Division 2, Specification Section entitled “Earthwork

1.03 QUALITY CONTROL

A. Codes and Standards: Excavation and backfill work shall be performed in compliance with applicable codes, standards and requirements of governing authorities having jurisdiction in the area.

B. Testing and Inspection Service: An independent testing laboratory shall be retained by the City to conduct appropriate soils and other testing in accordance with the Contract Documents.

1.04 JOB CONDITIONS

A. General

1. A separate geotechnical report is provided for information purposes with the Contract Documents. The report identifies properties below grade and also offers recommendations for foundation design, primarily for use of the Engineer. The recommendations shall not be construed as requirements of the Contract unless specifically referenced by the Contract Documents.

2. The City and/or the Engineer will not assume responsibility for variations of sub-soil quality or conditions at locations other than places shown and at the time the geotechnical investigation was made. The Contractor shall examine the site and review the available geotechnical report or undertake its own subsurface investigation prior to submitting its bid, taking into consideration all conditions that may affect its work.

B. Existing Utilities

1. Locate existing underground utilities in the areas of work. Accurate "As Built” Information describing existing pipelines and underground utilities is not available.

Test pits and hand excavation in critical areas will be required prior to initiating work.

2. All existing utilities including piping, electrical conduits, electric duct banks and telephone cables that are shown on the Contract Drawings to be relocated, shall be relocated prior to initiating earth work. Excavation and backfill for relocation of existing utilities shall conform to the requirements of Section 02222. The Contractor shall coordinate relocation of utilities with utility companies having jurisdiction in the area. Should unknown or incorrectly identified piping or other utilities be encountered during excavation, the Contractor shall consult the City and the Engineer of such piping or utility immediately for directions.

3. The Contractor shall cooperate with the City and utility companies in keeping respective services and facilities in operation.

1.05 PROHIBITION OF BLASTING

A. The use of explosives for excavation work is strictly prohibited on this project.

1.06 SUBMITTALS

A. The Contractor shall submit information and samples to the Engineer for review as specified herein in accordance with Section 01300. The information shall include:

1. Detailed description of dewatering method chosen and sequence of dewatering operations.

2. Plans showing the methods and location of dewatering and discharge. The drawings shall include a sufficient number of detailed sections to clearly illustrate the scope of work. The drawings showing all of the above information, including calculations, shall be prepared by a qualified Professional Engineer registered in the state of Florida, and shall bear its seal and signature. If required by regulatory agencies, a copy of the dewatering permit shall be submitted.

3. Lists of materials and equipment to be used. Detailed description of the method(s) of excavation, fill and compaction to be used.

4. Plans of open cut excavations showing side slopes and limits of the excavation at grade where not shown on the Contract Drawings.

5. Design computation of sheeting system. Sheeting and shoring plans shall be designed and sealed by a Professional Engineer registered in the State of Florida. Submittals shall indicate depth of penetration.

6. The Contractor shall furnish the Engineer, for approval, a representative sample of structural fill material from off-site sources at least ten calendar days prior to the date of anticipated use of such material. The sample shall be delivered to the site at a location determined by the Engineer. The submittal shall identify the source of the material.

1.07 PROTECTION OF PROPERTY AND STRUCTURES

A. The Contractor shall, at its own expense, sustain in place and protect from direct and indirect injury, its work at all times as well as all pipes, poles, conduits, walls, buildings, and all other structures, utilities and property in the vicinity of its work. Such sustaining shall be done by the Contractor. The Contractor shall take all risks attending the presence or proximity of pipes, poles, conduits, walls, buildings and all other structures, utilities, and property in the vicinity of its work. It shall be responsible for all damage, and assume all expenses, for direct or indirect injury and damage, caused by its work, to any such pipes, structures, etc., or to any person or property, by reason of injury to them, whether or not such structures, etc., are shown on the Drawings.

B. Barriers and lights shall be placed at all excavations in accordance with OSHA requirements.

C. Safe and suitable ladders for access to trenches shall be provided in accordance with OSHA requirements.

PART 2 - PRODUCTS

2.01 GENERAL

A. Specific locations/areas of work where these materials shall be utilized are defined on the Drawings.

2.02 STRUCTURAL FILL

A. Fill material shall be noncohesive, nonplastic, granular mixture of local clean sand or local clean sand and limerock free from vegetation, organic material, muck or deleterious matter per specification section entitled “Earthwork”. Broken Portland cement or asphaltic concrete shall not be considered an acceptable fill material. Fill material containing limerock shall have sufficient sand to fill the voids in the limerock. All structural fill materials shall be obtained from off-site sources.

2.03 CRUSHED LIMESTONE

A. Crushed limestone placed below foundation slabs shall be hard, durable, subangular particles of proper size and gradation, and shall be free from organic materials, wood, trash, sand, loam, chalk, excess fines and other deleterious materials. Refer to specification section entitled “Earthwork for additional information.

2.04 OTHER MATERIALS

A. Requirements for any other fill material, if needed, are defined in the Drawings and under specification section entitled “Earthwork”.

PART 3 - EXECUTION

3.01 CONTRACTOR INSPECTIONS

A. Examine the areas and conditions under which excavating, filling, and grading are to be performed. Do not proceed with the work until unsatisfactory conditions have been corrected.

B. Examine and accept existing grade of the project site walkways, pavements, etc., prior to commencement of work and report to Engineer if elevations of existing subgrade substantially vary from elevations shown on the Drawings.

3.02 EXCAVATION FOR STRUCTURES

A. Unless otherwise indicated on the Drawings, all excavation shall be made in such a manner, and to such widths, as will give ample room for properly constructing and inspecting the structures they are to contain. Excavation shall be made in accordance with the details shown on the Drawings, and as specified herein. Attention shall be given to the proper handling of storm water runoff. The Contractor shall intercept and collect surface run off both at the top and bottom of cut slopes. The excavating equipment shall operate in an organized fashion so as to remove silt from one edge of the excavation to the other so as not to trap silt within the undercut area.

B. Where required on the Drawings, unsuitable material (silt layer) beneath the groundwater encountered at the site shall be removed using a drag line or hydraulic excavator, as approved by the Engineer. The equipment shall operate in an organized manner so as to remove silt from one edge of the excavation to the other so as not to trap silt within the undercut area. Unsuitable material shall be hauled to and stockpiled temporarily by the Contractor at the “Temporary Muck Storage” location defined on the Drawings. Once drained, and during “dry” weather as determined by the Engineer in the field, the Contractor shall remove and dispose of it off-site. The Contractor shall be responsible for managing and maintaining the temporary muck storage area and shall ensure impact of this area, including providing dust control, runoff control, etc. is minimized. Also, the Contractor shall clean all roadways impacted by his demucking, hauling, temporary stockpiling and removal operations at a frequency as determined by the Engineer in the field.

C. In excavating for footings, structures and foundations, the Contractor shall take care not to disturb bottom of excavation. Excavate by hand to final grade just before concrete reinforcement is placed. Trim bottoms to required lines and grades to leave solid base to receive concrete.

D. The Contractor shall ensure that its excavation work does not adversely affect the bearing capacity of the structural subsurface. Also, the Contractor shall proceed with foundation work immediately after excavation work and as expeditiously as possible so as to minimize any potential for subsurface disturbance due to environmental factors, adverse weather, etc. The Contractor shall also take all necessary precautions to protect its work from potential adverse impacts. Where excavated areas are disturbed by subsequent operations or adverse weather, scarify surface reshape, fill as required and compact to required density.

E. All excavated soil material, removed underground utilities including pipes and fittings, electrical conduits and duct banks, and other undefined materials removed within the limits of the excavation, shall be disposed off-site by the Contractor.

F. Refer to the Drawings for additional requirements for excavation for specific locations/areas of work.

3.03 UNAUTHORIZED EXCAVATION

A. Excavation work carried outside of the work limits required by the Contract Documents shall be at the Contractor's expense, and shall be backfilled by the Contractor at its own expense with structural fill, as directed by the Engineer. Where, in the judgement of the Engineer, such over-excavation requires use of lean concrete or crushed stone, the Contractor, at its expense, shall furnish and place such materials.

3.04 SHEETING AND BRACING

A. The term "sheeting" shall represent any type of shoring used to support sides of the excavation. Walls of the excavation shall be kept vertical where open cut is not practical and, if required to protect the safety of workmen, the general public, this or other work or structure, or excavation walls, the excavation shall be properly sheeted and braced for conditions encountered and OSHA requirements. Excavation for the structures shall be sufficient to provide a clearance between their outer surfaces and the face of the excavation, sheeting, or bracing, of not less than two feet, unless otherwise indicated on the Drawings. Materials encountered in the excavation, which have a tendency to slough or flow into the excavation, undermine the bank, weaken the overlying strata, or are otherwise rendered unstable by the excavation operation shall be retained by sheeting, stabilization, grouting or other acceptable methods.

B. Minimum length of embedment below the deepest part of the excavation shall be 0.3 times the depth of excavation being supported or greater depending on the sheeting. The design of the sheeting arrangement shall be the responsibility of the Contractor.

C. Sheeting shall be removed provided its removal will not jeopardize pipes or structures. Any sheeting left in place shall be cut-off two feet below finished grade, or as directed. The Contractor will not receive extra compensation for sheeting left in place or the cut off work required.

3.05 REMOVAL OF WATER

A. <u>General</u>

1. The Contractor shall provide pumps, well points, and other appurtenant equipment necessary to remove and maintain water at such a level as to permit construction in the dry where defined on the Drawings. The ground water level shall be controlled so as to permit the placing and curing of concrete and the maintenance of supporting foundations and adjacent work and structures in the dry.

2. The Contractor shall use dewatering systems that include automatic starting devices, and standby pumps that will ensure continuous dewatering in the event of an outage of one or more pumps.

3. If excavations to be dewatered cannot be maintained dry by the Contractor's dewatering efforts, then the Contractor shall provide tremie seals at no additional cost to the City. The placement of tremie seals shall not preclude dewatering operations specified herein. The limits of tremie seals shall be recommended by the Contractor and reviewed and accepted by the Engineer.

B. Disposal: The Contractor shall be responsible to dispose of water from the dewatering operation in accordance with the Contract Documents and shall obtain all necessary permits and conform to all local regulations and codes. Water from the excavation shall be disposed of in such a manner as will not cause injury to public health, to public or private property, to the work completed or in progress, to the surface of the streets, will not cause any interference with the use of the same by the public, or will not cause pollution of any waterway or stream. Water from dewatering operation may be disposed at locations directed by the City with the proper installation of siltation screens and operation of the dewatering system in accordance with all local regulations and codes. The Contractor shall submit its dewatering method and point(s) of discharge to the Engineer for review at least twenty (20) days prior to any dewatering activities. The Contractor shall provide maintenance of canal(s) and drainage ditches to which it discharges. The cost of maintaining drainage ditches and canal(s) shall be included in the bid price. The Contractor shall remove siltation and haul, and dispose of this material on a regular basis to maintain the original base conditions at all time, so as not to impact drainage in the general area.

3.06 FILL PLACEMENT AND COMPACTION

A. General

1. Fill material (including structural fill and other fill material) shall be placed within the limits of excavations as shown on the Drawings. When placed in the wet, fill material shall be placed in standing groundwater to a level one foot above stabilized groundwater. The material shall be placed at one edge of the excavation and pushed to the other so as to move residuals across the bottom of the excavation. The leading edge of the fill should be cleaned regularly to remove it of the advancing residuals. All residuals shall be disposed at off-site locations shown on the Drawings or specified herein.

2. Once fill materials have been placed one foot above the stabilized groundwater, then the entire lift should be rolled with six passes from a 10-ton roller. The coverages shall be overlapping and shall occur while the compactor operated at a travel speed of not more than two feet per second. If a vibratory compactor is used, it should be operated with the vibrator off so as not to induce capillary moisture into the dry fill soils.

3. Fill materials placed following this initial lift shall be placed in the dry with loose lift thickness of eight inches or less. Refer to specification section entitled “Earthwork”

for additional information. Fill materials shall be placed within two percent of optimum moisture content.

B. Inspection and Testing: The fill placement and compaction shall be observed by the Engineer. Refer to specification section entitled “Earthwork for in-place density testing requirements. The Contractor shall coordinate and cooperate with the testing laboratory.

C. Final Grades: Final structure fill grades shall be within 0.1 feet of elevations shown. Where shown on the Drawings, surfaces shall be sloped for drainage or other surfaces.

D. Refer to the Drawings for additional fill and compaction requirements for specific locations/areas of work.

3.07 BACKFILL AGAINST STRUCTURES

A. Backfill against nonwater holding structures shall not be performed until the concrete has been inspected by the Engineer. Backfill against walls shall also be deferred until the structural slab for floors above the top fill line have been placed and attained design strength. Partial backfilling against adequately braced walls may be considered by the Engineer on an individual situation basis. Where walls are to be waterproofed, all work shall be completed and membrane materials dried or cured according to the manufacturer’s instructions before backfilling.

B. Backfill against tanks and other structures which are to retain liquids shall not be performed until leakage tests are completed and accepted by the Engineer.

- END OF SECTION -

SECTION 02225

CONTAMINATED SOILS AND GROUNDWATER

PART 1 - GENERAL

1.01 THE REQUIREMENT

A. This Section includes, except as elsewhere provided, the work necessary to remove, transport, and properly dispose of contaminated soils and groundwater required for complete construction of structures and underground piping systems and appurtenances as shown on the Drawings and specified herein.

1.02 RELATED WORK SPECIFIED ELSEWHERE

A. Section 02222 – Excavation and Backfill for Utilities

B. Section 02224 – Excavation and Backfill for Structures

1.03 QUALITY CONTROL

A. Codes and Standards: All work associated with dewatering, excavation, removal, transportation and disposal of contaminated soils and groundwater shall be performed in compliance with applicable codes, standards and requirements of governing authorities having jurisdiction in the area.

B. Testing and Inspection Service: A testing laboratory certified by the Broward County Environmental Protection and Growth Management Department (BCEPGMD) and the State of Florida shall be retained by the Contractor to conduct appropriate soils and groundwater testing in accordance with regulatory requirements and the Contract Documents.

1.04 SUBMITTALS

A. The Contractor shall submit information and samples to the City for review as specified herein in accordance with Section 01300. The information shall include:

1. Detailed description of the proposed methods for temporary stockpiling, transportation, and disposal of all contaminated soils and groundwater.

2. Copies of permits for all disposal facilities.

3. Copies of all manifest and documentation for handling and disposing of all contaminated soil and groundwater in full compliance with local, state and federal requirements. This documentation must be provided prior to requesting payment under this Bid item.

4. Copies of all laboratory analyses required for transportation and disposal of all contaminated soils and groundwater in full compliance with local, state and federal requirements.

5. Names, addresses and contact numbers of all subcontractors.

PART 2 - PRODUCTS (NOT USED)

PART 3 - EXECUTION

3.01 CONTAMINATED SOILS

A. The Contractor shall retain a laboratory certified by the BCEPGM and the State of Florida to sample the groundwater in the excavation, the stored soil and soil samples in the perimeter of the excavated hole for petroleum contamination (EPA Methods 601, 602, 610). The number of samples shall be sufficient to comply with the requirements of the Contractor's approved Dewatering Plan and all local, state and federal regulations. The results of the tests shall be forwarded to the City.

B. Excavated materials which are deemed to be contaminated shall be removed, treated and disposed of by the Contractor in accordance with all applicable regulatory requirements. The soil may be contaminated with petroleum product which may be partly or entirely diesel fuel or gasoline. When such soil conditions are encountered, they shall be brought to the City's attention. The extent of excavation shall be determined in the field by the City. Payment for this work shall be in accordance with the allowance bid item for excavation, treatment and disposal of contaminated soil, included in the Schedule of Prices Bid.

C. All contaminated soil which is excavated shall be stockpiled in an area designated for contaminated soils. The Contractor shall take whatever precautions are necessary to ensure that contaminated soils are not co-mingled with non-contaminated stockpiled soils and/or mucks.

D. Contaminated soils must be placed on an impermeable barrier when temporarily stockpiled and must be covered with visquine to prevent runoff. All stockpile leachate or runoff must be collected for disposal in accordance with federal, state and local regulations.

E. Contaminated soils shall be processed and treated at a state licensed facility. These soils shall be transported and disposed of in accordance with federal, state and local regulations.

F. The Contractor shall be responsible for testing soil which has been treated to certify treated soil meets applicable federal, state, and local regulations for final disposal.

3.02 CONTAMINATED GROUNDWATER

A. All water generated, pumped or removed from excavations as a result of excavation dewatering activities shall be collected, containerized, and managed prior to discharge and/or treatment at an approved discharge point in accordance with local, state and federal regulations and the requirements of the Contract Documents. If groundwater

contamination is identified at any time during the performance of the Work, Contractor shall immediately notify the City.

B. If contaminated groundwater in the dewatering excavation area is encountered, the contaminated groundwater shall be removed, treated and discharged by the Contractor in accordance with all applicable regulatory requirements. Payment for this work shall be in accordance with the allowance bid item for treatment and discharge of contaminated groundwater, included in the Schedule of Prices Bid.

C. Treatment of contaminated groundwater will include the following options, depending on the magnitude of the contamination in the trench: Granular Activated Carbon (GAC) Treatment vessels, mobile air stripping units, vacuum truck removal and disposal or other method as approved by the City and regulatory agencies with jurisdiction.

D. If contaminated groundwater is encountered during construction, Contractor shall provide reference information for the qualified groundwater remediation subcontractor to be utilized, including phone number, contact name, and address. The selected groundwater treatment/recycling facility for hauling contaminated groundwater shall also be identified.

E. Effluent water from the treatment system will be analyzed by the certified laboratory to confirm that concentrations are below regulatory limits. Effluent water will then be directed to a pre-approved location as determined by local regulatory agencies and/or the City.

3.03 TRANSPORT AND DISPOSAL

A. Transport Regulations: The Contractor shall be responsible for the loading, labeling, placarding, marking, weighing, and transporting of all waste materials in accordance with the Florida Department of Transportation Regulations, and U.S. Department of Transportation Regulations. The Contractor shall use only transporters that are licensed and competent to haul these wastes.

3.04 WASTE CONTAINERS

A. Each transport container of waste shall be visually inspected by the Contractor for leaks, drips, or container damage prior to being loaded. Containers which are found to be leaking or damaged shall not be loaded until the damage is repaired. The Contractor shall prepare the transport container to prevent spillage or contamination. The Contractor shall notify the City two hours before any loaded transport leaves the site.

B. All transport containers leaving the site shall be inspected by the Contractor to ensure that no waste material adheres to the wheels or undercarriage.

C. All vehicles on which waste is adhering shall be cleaned by sweeping tires and undercarriage or by other dry methods prior to leaving the site.

3.05 SHIPPING RECORDS

A. The Contractor shall prepare accurate shipping records for any wastes leaving the site in accordance with applicable federal and state regulations. The Contractor shall be responsible for providing copies of the records to the City and shall immediately notify the City of any problems in completing shipments and disposal of wastes.

B. The CONTRACTOR shall:

1. Be responsible for appropriate measurement of unit quantity (weight or volume) of waste material removed from the site.

2. Coordinate vehicle inspection and recording of quantities leaving the site with the City. These quantities shall be compared to recorded quantities received at the treatment or disposal facilities. The Contractor shall resolve any discrepancies occurring immediately, determining the probable cause for the discrepancy.

3. Be solely responsible for any and all actions necessary to remedy situations involving waste spiked in transit.

C. The Contractor shall ensure that a copy of the manifest is returned to the City by the designated treatment or disposal facility within 14 days of receipt of the material to be disposed.

- END OF SECTION -

SECTION 02240
DEWATERING

PART 1 - GENERAL

(NOT USED)

PART 2 - MATERIALS

(NOT USED)

PART 3 - EXECUTION

3.01 GENERAL

A. The Contractor shall be responsible for design, installation, and operation of a dewatering system to dewater specified excavations.

   1. The dewatering system shall be designed in accordance with the Best Management Practices (BMP's) adopted by FDEP.

   2. Inspection and control of dewatering system operations will be in accordance with the FDEP guidelines established in the Florida Erosion and Sediment Control Inspector's Manual (current edition).

B. Continuously manage and control excavation water recharge in order to facilitate and not impede construction activities at all times, including weekends, holidays, and during periods of work stoppages, and furnish and install, and operate, a contingency backup dewatering system to maintain control of excavation water levels to facilitate construction (i.e.; no construction delays).

3.02 SUBMITTALS

A. Submittals shall be made in accordance with the requirements specified in Contract Documents and the requirements of this Section.

B. Provide name, address, and phone numbers of all subcontractors.

C. The Contractor shall submit a Dewatering Best Management Practices (BMP) Plan prior to the start of excavation expected to include dewatering operations. The Plan shall provide detailed descriptions of dewatering procedures to be utilized to meet the requirements of this Section. Methodologies to control dewatering discharge contamination include, but are not limited to:

   1. Holding tanks of adequate size and volume.

   2. Wellpoint systems.

   3. Sump pumping systems.

4. Chemical precipitation of particulates.

5. Filter systems and siltation controls.

6. Outfall booms.

D. The Contractor shall provide a Site Health and Safety Plan and Activity Hazard Analysis (AHA) for contaminated soil as specified in the Contract Documents and/or groundwater as specified in this Section, to include the following:

1. A written description of the proposed method for temporary stockpiling, transportation, and disposal of all wastes.

2. Copy of permits of disposal facilities.

3. Certification of disposal of all wastes.

4. Directions to the nearest hospital and phone number.

5. Emergency contact phone numbers.

6. Laboratory analyses and sampling plan required for transportation and disposal of all wastes in accordance with applicable federal, state, and local requirements.

E. Upon Completion of Remediation Activities, the following shall be provided:

1. Copy of manifests for all wastes leaving the site.

2. Copy of the laboratory analyses results from all sampling activities.

3. Copy of closure reports that may be required.

3.03 SURFACE WATER CONTROL

A. Remove surface runoff controls when no longer needed.

B. Seal off or berm catch basins in the area of construction to prevent discharge of untreated dewatering effluent or runoff from unstabilized construction areas into storm drains.

C. All drain inlets or catch basins used for dewatering discharge shall be provided with silt and sediment removal barriers as approved by the Engineer.

1. All barriers shall be cleaned regularly to avoid sediment discharge into the storm drain system.

2. Construction activities will be stopped at no cost to the City until sediment controls are properly maintained, installed, and in compliance with the dewatering permit.

3. All barriers shall be removed upon issuance of a hurricane warning.

3.04 DEWATERING SYSTEMS

A. Design, furnish, and install, operate, and maintain a dewatering system of sufficient size and capacity to permit excavation and subsequent construction activities in water-free conditions, and to lower and maintain the excavation area groundwater level a minimum of 2 feet below the lowest point of excavation. The dewatering system shall be designed and operated such that the system continuously maintains excavations water levels so as to maintain the excavation water level in order to allow for the initiation and completion of excavation backfill compaction and restoration activities.

B. Dewatering systems shall include, but is not limited to, furnishing and installing wells or well points, and or other equipment and appurtenances as may be necessary, including system components or equipment, installed outside the outermost perimeter of the excavation limits, and sufficiently below lowest point of excavation, to maintain the specified or required groundwater elevation.

C. Open trench pumping maybe permitted upon the approval of the Engineer.

D. Design and Operate Dewatering Systems:

1. To prevent loss of ground as water is removed.

2. To avoid inducing settlement or damage to existing facilities, completed Work, or adjacent property.

3. Avoid surface water pollution or discharge of sediment to storm drain systems or waterways.

E. Provide supplemental ditches and sumps only as necessary to collect water from local seeps. Do not use ditches and sumps as primary means of dewatering. The Contractor shall not direct any flow of water over pavement surfaces. Discharge of water shall be conducted as approved by the local, state, and federal agencies and the Engineer.

F. Provide controls to prevent surface water from entering excavation pits, trenches, or stockpiled materials.

3.05 PIPELINES CONSTRUCTED UNDER WATER

A. In the event that it is found that the water in a trench cannot be lowered by ordinary means, i.e., well points and pumps, an alternate construction method may be proposed by the Contractor. Complete details, specifications, manufacturer's descriptive literature, installation lists and any other pertinent data regarding the proposed alternate method shall be submitted as an alternate by the Contractor to the City within 5 calendar days of the time that the Contractor anticipates using such alternate method.

B. If the City approves the alternate method in writing, it may be used, so long as the Work is performed in a manner which, in the opinion of the Engineer, conforms to the method and procedure as set forth in the information supplied by the Contractor in his original application for use of an alternate method. The City may revoke approval of the alternate method if at any time, in his opinion, the Work is not conforming to any applicable portion of these Specifications.

C. No pipeline shall be laid under water without approval of the City.

D. If the dewatering system is eliminated or the effort reduced, and the pipe is laid underwater, additional pipe zone material will be required as backfill to the water table elevation, or to the level it was reduced to.

3.06 DISPOSAL OF WATER

A. All water generated, pumped, or removed from excavations as a result of excavation dewatering activities shall be collected, containerized, and managed prior to discharge and or treatment at an approved discharge point or facility, in accordance with Broward County Code of Regulation, Sections 27. Contractor shall secure, obtain, and pay for all necessary local, state, and federal permits, licenses, fees, and or approvals to discharge water or perform onsite or offsite treatment and disposal. Treat water collected by dewatering operations as required by regulatory agencies, prior to discharge.

B. Discharge water as permitted, and in regulatory compliance with Contractor obtained discharge permits/licenses.

1. All discharge activities shall be performed so as to prevent silt and sediment discharge and eliminate any soil erosion or flooding, or otherwise damage existing facilities, completed Work, or adjacent property.

2. Maximum allowable turbidity of discharges to surface waters or storm drains will be 10 NTU's or the maximum permitted by the agency having jurisdiction, whichever is less.

3. Sump discharges cannot be discharged directly to storm drains or surface waters without treatment.

C. Affected storm sewer outfalls shall be protected with floating silt booms as approved by the Broward County Department of Environmental Protection and Growth Management Division (BCEPGMD) and the Engineer. All accumulated debris resulting from the dewatering discharge collecting in the boom shall be removed on a daily basis.

D. Visible silt plumes emanating from the area around the outfalls will be considered a failure of the silt and sediment removal measures and may result in a Notice of Violation issued by BCEPGMD. The Contractor will be responsible for all fines associated with the violation of the dewatering permit conditions issued to the Contractor.

E. Failure to control dewatering discharges as described above and as detailed in the Florida Erosion and Sediment Control Inspector's Manual, may result in an order to cease dewatering operations until the discharge problems are corrected. No claims will be accepted for costs or delays associated with unacceptable dewatering discharge practices.

3.07 WELL POINT REMOVAL

A. Well point holes shall be filled with sand which shall be washed into the hole.

B. Well point holes located within asphalt pavement surfaces or concrete pavements, shall be filled with sand to the subgrade. The remaining hole shall be filled with nonshrink grout.

3.08 CONTAMINATED GROUNDWATER AND DISPOSAL REQUIREMENTS

A. If Contractor suspects, witnesses, or identifies, groundwater contamination at any time during the performance of the Work, Contractor shall notify the City immediately. Results will be obtained by the onsite mobile laboratory.

B. If analytical testing documents and indicates elevated concentrations above FDEP action levels (Chapter 62-777, Florida Administrative Code) dewatering operations will be suspended until appropriate treatment and or construction measures can be implemented. Contractor shall not resume operations until notified to do so in writing by the City and construction of the remaining pipelines in that area will be installed in the wet or normal construction activities shall be resumed in other areas determined by the Engineer. There shall be no delay or mobilization claim associated with moving to another project area, unless all other Work has been completed. In addition, the local agency will be immediately notified via telephone and in writing by the Contractor. Dewatering activities in the area will not proceed until review of the matter with the local agency is resolved and written authorization is issued.

C. The Contractor shall submit a dewatering plan to the City for review. The Contractor is advised that the SFWMD, FDOT, BCEPGMD, etc. may require that a dewatering plan, prepared by a state of Florida licensed Professional Engineer or registered Professional Geologist, be submitted and approved prior to issuance of a dewatering permit. The Contractor will retain a state of Florida licensed Professional Engineer or registered Professional Geologist to provide an initial report of potential dewatering issues in the site vicinity. The Contractor shall retain a state of Florida licensed Professional Engineer or registered Professional Geologist to provide any additional services required by regulatory agencies regarding dewatering and contaminated sites.

D. The Contractor is advised that the BCEPGMD may have identified contaminated sites within ¼ mile radius of the project site. The Contractor may be required to provide testing and monitoring of the dewatering operations, and to institute dewatering methods and controls, as required by BCEPGMD, SFWMD, FDOT etc. The contractor will be responsible for all costs associated with means and methods of dewatering which will be set forth by dewatering permits.

E. Treatment of the groundwater will include three options depending on the magnitude of the contamination in the trench or as determined by the Engineer: Granular Activated Carbon (GAC) Treatment Vessels, Mobile Air Stripping Units, or Vacuum Truck Removal and Disposal or other method as approved by the Engineer. The Contractor will provide a submittal list of all qualified groundwater remediation subcontractors for GAC vessel treatment/portable air stripping unit and vacuum truck disposal including phone numbers, contact names, and addresses prior to start of construction. The selected groundwater treatment/recycling facility for hauling contaminated groundwater shall also be identified.

F. If contaminated groundwater in the dewatering trench is encountered, the remediation operations will begin once local agency approval is obtained. Contaminated water will be disposed first into a high volume holding (FRAC) tank and then treated through a GAC unit/portable air stripper or recovered into vacuum hauling trucks for disposal.

G. Effluent water from the treatment system will be analyzed by the onsite mobile laboratory to confirm that concentrations are below regulatory limits. Effluent water will then be directed to a pre-approved alternative location as determined by local agency and/or the Engineer.

- END OF SECTION -

SECTION 02300

EARTHWORK

PART 1 - GENERAL

1.01 RELATED DOCUMENTS

A. All applicable provisions of the Bidding and Contract Requirements, and Division 1 - General Requirements shall govern the WORK under this Section.

1.02 WORK INCLUDED

A. Provide all labor, materials, necessary equipment and services to complete the Earthwork, as indicated on the DRAWINGS, as specified herein or both, except as for items specifically indicated as "Not in Contract (N.I.C.) ITEMS"

B. Including but not necessarily limited to the following:

1. Excavation, including demucking.
2. Backfilling.
3. Filling.
4. Grading, general site and building pads.
5. Compaction.
6. Coordination with ENGINEER for offsite disposal of all excess materials and stock piling of suitable materials to be used as fill or backfill.

C. Cutting, proof rolling, filling and grading to required lines, dimensions, contours and elevations for proposed improvements as shown and implied on the DRAWINGS and required by these specifications.

D. Scarifying, compaction, moisture content conditioning and control, and removal of unsuitable material to ensure proper preparation of areas for the proposed improvements.

E. Undertake any special construction procedures for the site recommended in the geotechnical report for preparation of building and pavement areas.

F. There shall be no classification of excavation for measurement of payment regardless of materials encountered.

G. The WORK of this Section includes all earthwork required for construction of the WORK. Such earthwork shall include, but not be limited to, the loosening, removing, loading, transporting, depositing, and compacting in its final location of all materials wet and dry, as required for the purposes of completing the WORK specified in the Contract Documents, which shall include, but not be limited to, the furnishing, placing, and removing of sheeting and bracing necessary to safely support the sides of all excavation; all pumping, ditching, draining, and other required measures for the removal or exclusion of water from the

excavation; the supporting of structures above and below the ground; all backfilling around structures and all backfilling of trenches and pits; the disposal of excess excavated materials; borrow of materials to makeup deficiencies for fills; and all other incidental earthwork, all in accordance with the requirement of the Contract Documents.

1.03 RELATED WORK

A. All applicable sections of Technical Specifications.

1.04 REFERENCE SPECIFICATIONS, CODES, AND STANDARDS

A. Codes: All codes, as referenced herein, are specified in Section 01420, "Reference Standards".

B. American Society for Testing and Materials (ASTM) – latest edition

1. ASTM D 422 - Method for Particle-Size Analysis of Soils.

2. ASTM D 698 - Test Methods for Moisture-Density Relations of Soils and Soil-Aggregate Mixtures, using 5.5-lb (2.49-kg) Rammer and 12-in (304.8- mm) Drop.

3. ASTM D 1556 - Test Method for Density of Soil in Place by the Sand Cone Method.

4. ASTM D 1557 - Test Methods for Moisture-Density Relations of Soils and Soil Aggregate Mixtures Using 10-lb (4.54-kg) Rammer and 18-in (457- mm) Drop.

5. ASTM D 1633 - Test Method for Compressive Strength of Molded Soil-Cement Cylinders.

6. ASTM D 2216 - Laboratory Determination of Moisture content of Soil.

7. ASTM D 2419 - Test Method for Sand Equivalent Value of Soils and Fine Aggregate.

8. ASTM D 2487 - Classification of Soils for Engineering Purposes.

9. ASTM D 2901 - Test Method for Cement Content of Freshly-Mixed Soil-Cement.

10. ASTM D 2922 - Test Methods for Density of Soil and Soil-Aggregate in Place by Nuclear Methods (Shallow Depth).

11. ASTM D 3017 - Test for Water Content of Soil and Soil-Aggregate in Place by Nuclear Methods (Shallow Depth)

12. ASTM D 4253 - Test Methods for Maximum Index Density of Soils Using a Vibratory Table.

13. ASTM D 4254 - Test Methods for Minimum Index Density of Soils and Calculation of Relative Density.

14. ASTM D 4318 - Test for Plastic Limit, Liquid Limit, and Plasticity Index of Soils

15. ASTM D 4429 - Standard Test Method for CBR (California Bearing Ratio) of Soils in

Place

C. American Association of State Highway and Transportation Officials (AASHTO) - latest edition

1. T 88 Particle Size Analysis of Soils

1.05 SUBSOIL INFORMATION

A. Refer to Section 02210 - Subsurface Investigation.

1.06 SITE INSPECTION

A. The CONTRACTOR shall visit the site and acquaint themselves with all existing conditions. Make their own subsurface investigation to satisfy themselves as to site and subsurface conditions, but such subsurface investigations shall be performed only under time schedules and arrangements approved in advance by the CITY and ENGINEER.

1.07 TOPOGRAPHIC INFORMATION

A. The existing grades shown on the DRAWINGS are approximate only and no representation is made as to their accuracy or consistency. The CONTRACTOR shall verify all existing grades to the extent necessary to insure completion of the job to the proposed grades indicated on the DRAWINGS.

1.08 DISPOSAL OF SURPLUS OR UNSUITABLE MATERIAL

A. Unsuitable material encountered during the course of construction shall be removed from the construction site at the expense of the CONTRACTOR. Unsuitable material shall not be stockpiled on-site. All suitable material shall be stockpiled at areas approved by the ENGINEER.

1.09 BENCHMARKS AND MONUMENTS

A. CONTRACTOR shall employ a registered Professional Surveyor and Mapper to lay out lines and grades as indicated. Benchmarks shall be established by a Professional Surveyor and Mapper registered in the State of Florida. Benchmarks shall be permanent and easily accessible and maintained and replaced if disturbed or destroyed. All benchmarks shall be North American Vertical Datum 1988 (NAVD).

1.10 UTILITIES

A. Before starting site operations, disconnect or arrange for the disconnection of all utility services designated to be removed.

B. Locate all existing active utility lines traversing the site and determine the requirements for their protection. Preserve in operating condition all active utilities adjacent to or traversing the site and/or designated to remain.

C. Observe rules and regulations governing respective utilities in working under requirements of this section. Adequately protect utilities from damage, remove or replace as indicated, specified or required. Remove, plug or cap inactive or abandoned utilities encountered in

excavation. Record location of all utilities.

1.11 QUALITY ASSURANCE

A. A geotechnical engineer may be retained by the CITY to observe performance of WORK in connection with excavating, filling, grading, and compaction. This inspection will not relieve the CONTRACTOR from responsibility to complete the WORK in accordance with the DRAWINGS and specifications. The CONTRACTOR shall re-adjust all WORK performed that does not meet technical or design requirements but make no deviations from the Contract documents without specific and written acceptance of the ENGINEER.

B. Visual field confirmation and density testing of subgrade preparation and fill placement procedures shall be performed by the field geotechnical engineer as part of the construction testing requirements. The CONTRACTOR shall be informed as soon as possible of the test results.

C. The ENGINEER shall prepare field reports that indicate compaction test location, elevation data, testing results and acceptability. The CITY and CONTRACTOR shall be provided with written copies of the results within 24 hours of time test was performed.

D. All costs related to reinspection, due to failures, shall be paid for by the CONTRACTOR at no additional expense to CITY. The CITY reserves the right to direct any inspection that is deemed necessary. CONTRACTOR shall provide free access to site for inspection activities.

E. Where soil material is required to be compacted to a percentage of maximum density, the maximum density at optimum moisture content will be determined in accordance with ASTM D 1557. Where cohesionless, free draining soil material is required to be compacted to a percentage of relative density, the calculation of relative density will be determined in accordance with ASTM D 4253 and D 4254. Field density in-place tests will be performed in accordance with ASTM D 1556, ASTM D 2922, or by such other means acceptable to the ENGINEER.

F. In case the tests of the fill or backfill show non-compliance with the required density, the CONTRACTOR shall accomplish such remedy as may be required to insure compliance. Subsequent testing to show compliance shall be by a testing laboratory selected by the CITY and shall be at the CONTRACTOR's expense.

G. Particle size analysis of soils and aggregates will be performed using ASTM D 422.

H. Determination of sand equivalent value will be performed using ASTM D 2419.

I. Unified Soil Classification System: References in these specifications are to soil classification types and standards set forth in ASTM D 2487. The CONTRACTOR shall be bound by all applicable provisions of said ASTM D 2487 in the interpretation of soil classifications.

J. Comply with requirements of all applicable building codes and other public agencies having jurisdiction upon the WORK.

1.12 SUBMITTALS

A. Within 10 days after Notice to Proceed (NTP), the CONTRACTOR shall submit to the CITY, a schedule detailing the sequence, and time of completion of all phases of WORK under this section.

B. At least 2 weeks in advance of imported fill use, the CONTRACTOR shall submit the following laboratory test data to the ENGINEER for each type of imported soil/gravel material to be used as compacted fill.

1. Moisture and Density Relationship - ASTM D1557 or D698 as required by project geotechnical engineering study;

2. Mechanical Analysis - AASHTO T-88; and,

3. Plasticity Index - ASTM D 4318.

C. Together with the above test data, the CONTRACTOR shall submit a 5-pound sample of each type of off-site fill material in an air tight container for the approval of the ENGINEER and CITY.

D. Submit the name of each material supplier and specific type and source of each material. Any change in source or soil type throughout the job requires approval of the CITY and the ENGINEER.

PART 2 - PRODUCTS

2.01 SUITABLE FILL AND BACKFILL MATERIAL REQUIREMENTS

A. General: Fill, backfill, and embankment materials shall be suitable selected or processed clean, fine earth, rock, or sand, free from grass, roots, brush, or other vegetation.

B. Fill and backfill materials to be placed within 6 inches of any structure or pipe shall be free of rocks or unbroken masses of earth materials having a maximum dimension larger than 2 inches.

C. Suitable Materials: Soils not classified as unsuitable as defined in Paragraph entitled, "Unsuitable Material" herein, are defined as suitable materials and may be used in fills, backfilling, and embankment construction subject to the specified limitations. In addition, when acceptable to the ENGINEER, some of the material listed as unsuitable may be used when thoroughly mixed with suitable material to form a stable composite.

D. Suitable materials may be obtained from on-site excavations, may be processed on-site materials, or may be imported. If imported materials are required to meet the requirements of this Section or to meet the quantity requirements of the project the CONTRACTOR shall provide the imported materials at no additional expense to the CITY, unless a unit price item is included for imported materials in the bidding schedule.

E. On-site fill

1. On-site materials for use as fill shall consist of excavated soil from other portions of

the site;

2. The CONTRACTOR shall use the on-site soil judiciously to facilitate the construction schedule including the use of the most readily compactable soil for fill in building areas and as fill within 2 feet of pavement subgrade;

3. Topsoil shall not be utilized as engineered fill;

4. Excavated material containing rock, stone or masonry debris smaller than 2 feet in its largest dimension, may be mixed with suitable material and utilized up to 3 feet below proposed subgrade;

5. Excavated material containing rock, stone or masonry debris smaller than 6 inches in its largest dimension may be mixed with suitable material and utilized up to 18 inches below proposed subgrade;

6. No material greater than 2 inches in its largest dimension may be utilized within 18 inches of proposed subgrade;

7. No material greater than 2 inches in its largest dimension may be utilized as backfill for storm drainage or utility trenches.

8. Prior to placement, on-site material to be used as fill shall not contain:

   a. Debris other than crushed concrete and brick meeting the above requirements.

   b. Timber or railroad ties.

   c. Other deleterious materials such as steel rails, rebar, trash, etc.

   d. Hazardous material - Unsuitable and deleterious materials and debris shall be disposed of off-site in accordance with all applicable regulations.

F. Off-site imported fill

1. If necessary, off-site fill shall be obtained and provided by the CONTRACTOR;

2. Fill shall be clean, well graded granular soil which is non-expansive and non-collapsible and shall have less than 20% by weight passing the #200 sieve. The portion passing the #200 shall be non-plastic.

3. Fill with less fines (less than #200) may be required on project specific basis and as required by ENGINEER. Likewise, fill with more than 20% fines may be acceptable on a project specific basis or as identified in a geotechnical engineering study;

4. Imported fill shall be free of all hazardous substances. Certification of compliance and, if requested, test results substantiating compliance shall be furnished to the CITY and ENGINEER by the CONTRACTOR not less than one week prior to its intended use;

5. The CITY reserves the right to test off-site fill material for conformance with these specifications; and,

6. The CONTRACTOR shall be responsible for all permits and regulatory requirements associated with offsite borrow sources.

G. The following types of suitable materials are designated and defined as follows:

1. Type 1 (one inch minus granular backfill): Crushed rock, gravel, or sand with 100 percent passing a 1-inch sieve and a sand equivalent value not less than 50.

2. Type 2 (one half inch minus granular backfill): Crushed rock, gravel, or sand with 100 percent passing a 1/2-inch sieve and a sand equivalent value not less than 50.

3. Type 3 (sand backfill): Sand with 100 percent passing a 3/8-inch sieve, at least 90 percent passing a number 4 sieve, and a sand equivalent value not less than 30.

4. Type 4 (coarse rock backfill): Crushed rock or gravel with 100 percent passing a 1-inch sieve and not more than 10 percent passing a Number 4 sieve.

5. Type 5 (pea gravel backfill - ASTM #89): Crushed rock or gravel with 100 percent passing a 1/2-inch sieve, 90 percent passing a Number 8 sieve and not more than 10 percent passing a Number 4 sieve.

6. Type 6 (coarse drainrock - ASTM #4): Crushed rock or gravel meeting the following gradation requirements:

Sieve Size	Percentage Passing
2-inch	100
1 1/2-inch	90 - 100
1-inch	20 - 55
3/4-inch	0 - 15
No. 200	0-3

7. Type 7 (graded drainrock): Crushed rock or gravel, durable and free from slaking or decomposition under the action of alternate wetting or drying. The material shall be uniformly graded and shall meet the following gradation requirements.

Sieve Size	Percentage Passing
1-inch	100
3/4-inch	90 - 100
3/8-inch	40 - 100
No. 4	25 - 40
No. 8	18 - 33
No. 30	5 - 15
No. 50	0 - 7
No. 200	0 - 3

8. The drainrock shall have a sand equivalent value not less than 75. The finish graded

surface of the drainrock immediately beneath hydraulic structures shall be stabilized to provide a firm, smooth surface upon which to construct reinforced concrete floor slabs.

9. Type 8 (Ballast Rock / ¾ inch Rock): Crushed rock or gravel, durable and free from slaking or decomposition under the action of alternate wetting or drying. The material shall be uniformly graded and shall meet the following gradation requirements.

Sieve Size	Percentage Passing
1-inch	100
3/4-inch	40 - 60
No. 4	0 - 3
No. 8	0 - 3

10. Type 9: (Bedding rock - ASTM #67): Well graded crushed rock or gravel meeting the following gradation:

Sieve Size	Percentage Passing
1-inch	100
3/4-inch	98 - 100
1/2-inch	55 - 70
3/8-inc	30 - 40
No. 4	0 - 6

11. Type 10 (Class I crushed stone - ASTM #57): Manufactured angular, granular crushed stone, rock, or slag, with 100 percent passing a 1-inch sieve and less than 5 percent passing a Number 4 sieve.

12. Type 11 (aggregate base): Crushed rock aggregate base material of such nature that it can be compacted readily by watering and rolling to form a firm, stable base for pavements. At the option of the CONTRACTOR, the grading for either the 1-1/2-inch maximum size or 3/4-inch maximum size shall be used. The sand equivalent value shall be not less than 22, and the material shall meet the following gradation requirements.

Sieve Size	1-1/2-inch Max. 3/4-inch Max.	Percentage Passing
2-inch	100	--
1-1/2-inch	90 – 100	-
1-inch	--	100
3/4-inch	50 - 85	90 - 100
No. 4	25 - 45	35 - 55
No. 30	10 - 25	10 - 30
No. 200	2 - 9	2 - 9

13. Type 12 (aggregate subbase): Crushed rock aggregate subbase material that can be compacted readily by watering and rolling to form a firm stable base. The sand equivalent value shall be not less than 18 and shall meet the following gradation requirements.

Sieve Size	Percentage Passing
3-inch	100
2 1/2-inch	87 - 100
No. 4	35 - 95
No. 200	0 - 29

14. Type 13 (cement-treated backfill): Material which consists of Type 7 material, or any mixture of Types B, C, G and H materials which has been cement-treated so that the cement content of the material is not less than 5 percent by weight when tested in accordance with ASTM D 2901. The ultimate compressive strength at 28 days shall be not less than 400 psi when tested in accordance with ASTM D 1633.

15. Type 14 (topsoil): Stockpiled topsoil material which has been obtained at the site by removing soil to a depth not exceeding 2 feet. Removal of the topsoil shall be done after the area has been stripped of vegetation and debris as specified.

16. Type 15 (trench plug): Low permeable fill material, a nondispersible clay material having a minimum plasticity index of 10.

H. If approved by the ENGINEER, any bituminous concrete on the site shall be milled/removed prior to placing any fill and shall be reused only onsite immediately below the pavement stone base course.

2.02 UNSUITABLE MATERIAL

A. Unsuitable soils for fill material shall include soils which, when classified under ASTM D 2487, fall in the classifications of Pt, OH, CH, MH or OL.

B. In addition, any soil which cannot be compacted sufficiently to achieve the percentage of maximum density specified for the intended use shall be classed as unsuitable material.

2.03 USE OF FILL, BACKFILL, AND EMBANKMENT MATERIAL TYPES

A. The CONTRACTOR shall use the types of materials as designated herein for all required fill, backfill, and embankment construction hereunder.

B. Where these Specifications conflict with the requirements of any local agency having jurisdiction, or with the requirements of a material manufacturer, the ENGINEER shall be immediately notified. In case of conflict therewith, the CONTRACTOR shall use the most stringent requirement, as determined by the ENGINEER.

C. Fill and backfill types shall be used in accordance with the following provisions:

1. Embankment fills shall be constructed of any mixture of Type 1 through Type 11 materials.

2. Pipe zone backfill, as defined under Paragraph 3.15 "Pipe and Utility Trench Backfill" herein, shall consist of the following materials for each pipe material listed below. Where pipelines are installed on grades exceeding 4 percent, and where backfill materials are graded such that there is less than 10 percent passing a Number 4 sieve, trench plugs of Type 13 or 14 materials shall be provided at maximum intervals of 200 feet or as shown on the DRAWINGS.

    a. Mortar coated pipe, concrete pipe, and uncoated ductile iron pipe shall be provided Type 1, 2, 3, 4, 5, 9 or 10 pipe zone backfill materials.

    b. Coal tar enamel coated pipe, polyethylene encased pipe, tape wrapped pipe, and other non-mortar coated pipe shall be backfilled with Type 3 pipe zone backfill material.

    c. Plastic pipe and vitrified clay pipe shall be backfilled with Type 9 or 10 pipe zone backfill material.

3. Trench zone backfill for pipelines as defined under Paragraph 3.15 "Pipe and Utility Trench Backfill" shall be or any of Types 1 through 11 backfill materials or any mixture thereof, except that Type K material may be used for trench zone backfill in agricultural areas unless otherwise shown or specified.

4. Final backfill material for pipelines under paved area, as defined under Paragraph 3.15 "Pipe and Utility Trench Backfill" shall be Type 11 backfill material. Final backfill under areas not paved shall be the same material as that used for trench backfill, except that Type K material shall be used for final backfill in agricultural areas unless otherwise shown or specified.

5. Trench backfill and final backfill for pipelines under structures shall be the same material as used in the pipe zone, except where concrete encasement is required by the Contract Documents.

6. Aggregate base materials under pavements shall be Type 11 material constructed to the thicknesses shown or specified. Where specified or shown, aggregate subbase shall be Type 12 Material.

7. Backfill around structures shall be or Types 1 through Type 11 materials, or any mixture thereof.

8. Backfill materials beneath structures shall be as follows:

9. Drainrock materials under hydraulic structures or other water retaining structure with underdrain systems shall be Type 7 or Type 8 material.

10. Under concrete hydraulic structures or other water retaining structures without underdrain systems, Types 7, 8 or 11 materials shall be used.

11. Under structures where groundwater must be removed to allow placement of concrete, Type 6 material shall be used.

12. Under all other structures, Type 4, 5, 6, 7, 8, 9 or 11 material shall be used.

13. Backfill used to replace pipeline trench over-excavation shall be a layer of Type 6, 7, 8, 9 or 10 materials. This backfill material shall be wrapped with filter fabric to prevent migration of fines for wet trench conditions. The same material as used for the pipe zone backfill may be used if the trench conditions are not wet. Filter fabric shall be Mirafi 140 N, Mirafi 700 X, or equal.

14. The top 6 inches of fill on reservoir roofs, embankment fills around hydraulic structures, and all other embankment fills shall consist of Type 14 material, topsoil.

2.04 EMBANKMENT

A. The maximum sizes of rock which will be permitted in the completed fill areas are as follows:

Depth Below Finish Grade	Maximum Allowable Diameter
Top 4-inches	1-inch
4-inches to 12-inches	3-1/2-inches
12-inches to 2-feet	6-inches
2-feet to 4-feet	12-inches
4-feet to 8-feet	24-inches
Below 8-feet	36-inches

B. Embankments shall be constructed of material containing no muck, stumps, roots, brush, vegetable matter, rubbish or other material that will not compact into a suitable and enduring roadbed, and material designated as undesirable shall be removed from the site. Where embankments are constructed adjacent to bridge end bents or abutments, rock larger than 3-1/2 inches in diameter shall not be placed within three feet of the location of any abutment.

C. Fill material containing debris, sod, biodegradable materials shall not be used as fill in construction areas.

D. Fill material required for the building pads and for pavement subgrade shall be granular fill, free of organic material.

E. Fill material required for pervious and sodded areas shall have a maximum organic component of 10%. CONTRACTOR shall provide, at without any cost to the CITY, organic content test results for approval by the ENGINEER.

2.05 EQUIPMENT

A. Compactor for mass earthwork shall be minimum 3 ton static drum weight vibratory roller or 5 ton static drum weight sheeps footed compactor as appropriate for the type of soil material at the site or other compactor approved by the ENGINEER.

B. Compactor for trenches and where access or maneuverability is limited use, a double drum walk behind roller or vibratory plate compactor or "jumping jack" tampers.

PART 3 - EXECUTION

3.01 GENERAL

A. Prior to bidding of all WORK within this section, the CONTRACTOR shall become thoroughly familiar with the geotechnical engineering study, if available, as well as the site, site conditions, and all portions of the WORK falling within this section.

B. The CONTRACTOR shall refer to the erosion control DRAWINGS, if provided, for staging of earthwork operations and for erosion control measures to be implemented prior to commencement of earthwork.

C. Locate and identify existing utilities that are to remain and protect them from damage.

D. Notify utility companies to allow removal and/or relocation of any utilities that are in conflict with the proposed improvements.

E. Protect fences, structures, sidewalks, paving, curbs, etc. to remain from equipment and vehicular traffic.

F. Protect benchmarks, property corners and all other survey monuments from damage or displacement. If a marker needs to be removed/relocated it shall be referenced by a licensed land surveyor and replaced, as necessary, by the same at no additional cost to the CITY.

G. Remove from the site, material encountered in grading operations that, in opinion of CITY or ENGINEER, is unsuitable or undesirable for backfilling in pavement or building areas as per Paragraph 2.01.

H. Identify required lines, levels, contours and datum to bring site grades to the proposed subgrade conditions inferred from the DRAWINGS.

I. Do not perform any WORK associated with this section prior to completion of all required inspections, tests and approvals.

J. When performing grading operations during periods of prolonged wet or dry weather, provide adequate measures for surface drainage and ground water control, and moisture control of soils (i.e., wetting or drying, scarify and discing) so as to place and compact the soil within the moisture content range a few percentage points of its optimum water content. Any disturbed areas should be proofrolled at the end of each day.

K. Sloping, shoring, bracing, and fencing shall be installed in accordance with Federal OSHA requirements as well as the requirements of all regulatory authorities having jurisdiction.

L. Allow no debris to accumulate on-site. Haul debris away from the site and dispose of at no cost to the CITY.

M. The CONTRACTOR shall remove and dispose of all excess excavated material at a site selected by the CONTRACTOR and reviewed by the ENGINEER.

3.02 JOB CONDITIONS

A. Protection: Use all means necessary to protect existing objects and vegetation. In the event of damage, immediately make all repairs, and replacements necessary to the acceptance of the ENGINEER at no cost to the CITY.

3.03 BACKFILL, FILLING & GRADING

A. Grades:

1. Cut, backfill, fill and grade to proper grade levels indicated. The proposed grades shown on the DRAWINGS are for establishing a finished grade over the site.

B. Filling:

1. Fill material shall be placed in horizontal layers and spread to obtain a uniform thickness.

2. After compaction, layers of fill are not to exceed twelve (12) inches for cohesive soils or eight (8) inches for noncohesive soils.

3.04 STRUCTURE, ROADWAY, AND EMBANKMENT EXCAVATION

A. General: Except when specifically provided to the contrary, excavation shall include the removal of all materials of whatever nature encountered, including all obstructions of any nature that would interfere with the proper execution and completion of the WORK. The removal of said materials shall conform to the lines and grades shown or ordered. Unless otherwise provided, the entire construction site shall be stripped of all vegetation and debris, and such material shall be removed from the site prior to performing any excavation or placing any fill. The CONTRACTOR shall furnish, place, and maintain all supports and shoring that may be required for the sides of the excavations, and all pumping, ditching, or other measure for the removal or exclusion of water, including taking care of storm water, groundwater, and wastewater reaching the site of the WORK from any source so as to prevent damage to the WORK or adjoining property. Excavations shall be sloped or otherwise supported in a safe manner in accordance with applicable State safety requirements and the requirements of OSHA Safety and Health Standards for Construction (29CFR1926).

B. Excavation Beneath Structures and Embankments: Except where otherwise specified for a particular structure or ordered by the ENGINEER, excavation shall be carried to the grade of the bottom of the footing or slab. Where shown or ordered, areas beneath structures or fills shall be over-excavated. The subgrade areas beneath embankments shall be excavated to remove not less than the top 6 inches of native material and where such subgrade is sloped, the native material shall be benched. When such over excavation is shown, both over-excavation and subsequent backfill to the required grade shall be performed by the CONTRACTOR. When such over-excavation is not shown but is ordered by the ENGINEER, such over- excavation and any resulting backfill will be paid for under a separate unit price bid item if such bid item has been established; otherwise, payment will be made in accordance with a negotiated price. After the required excavation or over-excavation has been completed, the exposed surface shall be scarified to a depth of 6 inches, brought to optimum moisture content, and rolled with heavy compaction equipment

to obtain 98 percent of maximum density.

C. Excavation Beneath Paved Areas: Excavation under areas to be paved shall extend to the bottom of the aggregate base or subbase, if such base is called for; otherwise it shall extend to the paving thickness. After the required excavation has been completed, the top 12 inches of exposed surface shall be scarified, brought to optimum moisture content, and rolled with heavy compaction equipment to obtain 98 percent of maximum density. The finished subgrade shall be even, self-draining, and in conformance with the slope of the finished pavement. Areas that could accumulate standing water shall be regraded to provide a self-draining subgrade.

D. Notification of ENGINEER: The CONTRACTOR shall notify the ENGINEER at least 3 days in advance of completion of any structure excavation and shall allow the ENGINEER a review period of at least one day before the exposed foundation is scarified and compacted or is covered with backfill or with any construction materials.

3.05 PIPELINE AND UTILITY TRENCH EXCAVATION

A. General: Unless otherwise shown or ordered, excavation for pipelines and utilities shall be open-cut trenches. Trench widths shall be kept as narrow as is practical for the method of pipe zone densification selected by the CONTRACTOR, but shall have a minimum width at the bottom of the trench equal to the outside diameter of the pipe plus 24 inches for mechanical compaction methods and 18 inches for water consolidation methods. The maximum width at the top of the trench shall be equal to the outside diameter of the pipe plus 36 inches for pipe diameters 18 inches and larger and to the outside diameter of the pipe plus 24 inches for pipe diameters less than 18 inches, or as shown on the DRAWINGS.

B. Trench Bottom: Except when pipe bedding is required, the bottom of the trench shall be excavated uniformly to the grade of the bottom of the pipe. The trench bottom shall be given a final trim, using a string line for establishing grade, such that each pipe section when first laid will be continually in contact with the ground along the extreme bottom of the pipe. Rounding out the trench to form a cradle for the pipe will not be required. Excavations for pipe bells and welding shall be made as required.

C. Open Trench: The maximum amount of open trench permitted in any one location shall be determined by FDOT MOT approvals. All trenches shall be fully backfilled at the end of each day. The above requirements for backfilling will be waived in cases where the trench is located further than 100 feet from any traveled roadway or occupied structure. In such cases, however, barricades meeting OSHA requirements shall be provided and maintained. Requirements of Section 01550, paragraph 1.02B shall also apply.

D. Trench Over-Excavation: Where the DRAWINGS indicate that trenches shall be over-excavated, they shall be excavated to the depth shown, and then backfilled to the grade of the bottom of the pipe.

E. Over-Excavation: When ordered by the ENGINEER, whether indicated on the DRAWINGS or not, trenches shall be over-excavated beyond the depth shown. Such over-excavation shall be to the depth ordered. The trench shall then be backfilled to the grade of the bottom of the pipe. All WORK specified in this Section shall be performed by the CONTRACTOR when the over-excavation ordered by the ENGINEER is less than 6 inches below the limits shown.

When the over-excavation ordered by the ENGINEER is 6 inches or greater below the limits shown, additional payment will be made to the CONTRACTOR for that portion of the WORK which is located below said 6-inch distance. Said additional payment will be made under separate unit price bid items for over-excavation and bedding if such bid items have been established; otherwise payment will be made in accordance with a negotiated price.

F. Where pipelines are to be installed in embankment or structure fills, the fill shall be constructed to a level at least one foot above the top of the pipe before the trench is excavated.

3.06 OVER-EXCAVATION NOT ORDERED, SPECIFIED, OR SHOWN

A. Any over-excavation carried below the grade ordered, specified, or shown, shall be backfilled to the required grade with the specified material and compaction. Such WORK shall be performed by the CONTRACTOR at its own expense.

3.07 EXCAVATION IN LAWN AREAS

A. Where excavation occurs in lawn areas, the sod shall be carefully removed, kept damp, and stockpiled to preserve it for replacement. Excavated material may be placed on the lawn; provided that a drop cloth or other suitable method is employed to protect the lawn from damage. The lawn shall not remain covered for more than 72 hours. Immediately after completion of backfilling and testing of the pipeline, the sod shall be replaced and lightly rolled in a manner so as to restore the lawn as near as possible to its original condition. CONTRACTOR shall provide new sod if stockpiled sod has not been replaced within 72 hours.

3.08 EXCAVATION IN VICINITY OF TREES

A. Except where trees are shown to be removed, trees shall be protected from injury during construction operations. No tree roots over 2 inches in diameter shall be cut without express permission of the ENGINEER. Trees shall be supported during excavation by any means previously reviewed and approved by the ENGINEER.

3.09 ROCK EXCAVATION

A. Rock is defined as follows:

1. Rock shall be classified as material having a blow count in excess of 30 blows per foot from a Standard Penetration Test (ASTM D-1586) and exceeding 1000 psi from an Unconfined Compression Strength Test (ASTM D-2938); and,

2. General Excavation - Any material that cannot be excavated with a single-toothed ripper drawn by a crawler tractor having a minimum draw bar pull rated at not less than 71,000 lbs. (Caterpillar D9N or equivalent), and occupying an original volume of at least 2 cubic yards or more; and,

3. Trench Excavation - Any material that cannot be excavated with a backhoe having a break out force rated at not less than 44,000 pounds (Caterpillar 235D or equivalent), and occupying an original volume of at least 2 cubic yards.

B. Rock excavation shall include removal and disposal of the following: (1) all boulders measuring 1/3 of a cubic yard or more in volume; (2) all rock material in ledges, bedding deposits, and unstratified masses which cannot be removed without systematic drilling and blasting; (3) concrete or masonry structures which have been abandoned; and (4) conglomerate deposits which are so firmly cemented that they possess the characteristics of rock as described in Paragraph 3.09(A).

C. Said rock excavation shall be performed by the CONTRACTOR; provided, that should the quantity of rock excavation be affected by any change in the scope of the WORK, an appropriate adjustment of the contract price will be made under a separate bid item if such bid item has been established; otherwise payment will be made in accordance with a negotiated price.

D. Explosives and Blasting: Blasting will not be permitted, except by express permission of the ENGINEER on a case-by-case basis. The use of explosives will be subject to the approval and regulations of all agencies having jurisdiction. If blasting is utilized at the site of the WORK, the CONTRACTOR shall take all precautions and provide all protective measures necessary to prevent damage to property and structures or injury to person. Prior to blasting, the CONTRACTOR shall secure all permits required by law for blasting operations and shall provide any additional hazard insurance required by the CITY. The CONTRACTOR shall have a fully qualified and experienced blasting supervisor in charge of all blasting operations.

E. The CONTRACTOR will be held responsible for all and shall make good any damage caused by blasting or resulting from its possession or use of explosives on the WORK.

F. All operations involving the handling, storage, and use of explosives shall be conducted in accordance with the requirements of the OSHA Standards for Construction, and in accordance with all local laws and regulations.

3.10 DISPOSAL OF UNSUITABLE EXCAVATED MATERIAL

A. The CONTRACTOR shall remove and dispose of all unsuitable excavated material. This shall include muck, tree roots, rocks, garbage, debris, or any other material designated as unsuitable by Part 2 of this Section. Disposal shall be at a site selected by the CONTRACTOR that is designated as an approved disposal site for the unsuitable material.

3.11 BACKFILL - GENERAL

A. Backfill shall not be dropped directly upon any structure or pipe. Backfill shall not be placed around or upon any structure until the concrete has attained sufficient strength to withstand the loads imposed. Backfill around water retaining structures shall not be placed until the structures have been tested, and the structures shall be full of water while backfill is being placed.

B. Except for drainrock materials being placed in over-excavated areas or trenches, backfill shall be placed after all water is removed from the excavation.

3.12 PLACING AND SPREADING OF BACKFILL MATERIALS

A. Backfill materials shall be placed and spread evenly in layers. When compaction is achieved using mechanical equipment the layers shall be evenly spread so that when compacted each layer shall not exceed 6 inches in thickness.

B. During spreading each layer shall be thoroughly mixed as necessary to promote uniformity of material in each layer. Pipe zone backfill materials shall be manually spread, tamped, and haunched around the pipe so that when compacted the pipe zone backfill will provide uniform bearing and side support.

C. Where the backfill material moisture content is below the optimum moisture content water shall be added before or during spreading until the proper moisture content is achieved.

D. Where the backfill material moisture content is too high to permit the specified degree of compaction the material shall be dried until the moisture content is satisfactory.

3.13 COMPACTION - GENERAL

A. Compact each layer of fill in designated areas with approved equipment to achieve a maximum density at optimum moisture, AASHTO T 180 - latest edition.

1. Building Pads: compaction shall be to 98% of maximum density, unless otherwise shown on the DRAWINGS or specifications. Building pads shall be within plus or minus one-tenth (0.1) of a foot of the elevations shown on the plans.

2. Refer to Sections 02772 Asphaltic Concrete Paving for compaction requirements in the affected areas.

3. Under landscaped area, compaction shall be to 85% of maximum density, unless otherwise shown on the DRAWINGS.

B. No backfill shall be placed against any masonry or other exposed building surface until permission has been given by the ENGINEER and in no case until the masonry has been in place seven days.

C. Heavy construction equipment will not be permitted within ten (10) feet of any masonry or other exposed building surface.

D. Compaction in limited areas shall be obtained by the use of mechanical tampers or approved hand tampers. When hand tampers are used, the materials shall be deposited in layers not more than four inches thick. The hand tampers used shall be suitable for this purpose and shall have a face area of not more than 100 square inches. Special precautions shall be taken to prevent any wedging action against masonry, or other exposed building surfaces.

3.14 COMPACTION OF FILL, BACKFILL, AND EMBANKMENT MATERIALS

A. Each layer of Types 1, 2, 3, 7, 8, and 14 backfill materials as defined herein, where the material is graded such that at least 10% passes a No. 4 sieve, shall be mechanically compacted to the specified percentage of maximum density. Equipment that is consistently

capable of achieving the required degree of compaction shall be used and each layer shall be compacted over its entire area while the material is at the required moisture content.

B. Each layer of Type 4, 5, 6, and 13 backfill materials shall be compacted by means of at least 2 passes from a flat plate vibratory compactor. When such materials are used for pipe zone backfill, vibratory compaction shall be used at the top of the pipe zone or at vertical intervals of 24 inches, whichever is the least distance from the subgrade.

C. Type 9 and 10 material requires mechanical spreading and placement to fill voids but does not require mechanical compaction or vibration. Tamping shall be used in pipe zone areas.

D. Fill on structure roof slabs shall be deposited at least 30 days after the concrete roof slab has been placed. Equipment weighing more than 10,000 pounds when loaded shall not be used on a roof. A roller weighing not more than 8,000 pounds shall be used to compact fill on a roof.

E. Flooding, ponding, or jetting shall not be used for fill on roofs, backfill around structures, backfill around reservoir walls, for final backfill materials, or aggregate base materials.

F. Pipe zone backfill materials that are granular may be compacted by a combination of flooding and vibration using concrete vibrators or by jetting, when acceptable to the ENGINEER. Tamping shall be used to ensure adequate bedding in the pipe zone.

G. Pipeline trench zone backfill materials, containing 5% or less of material passing a No. 200 sieve, may be compacted using flooding and jetting or vibration if the CONTRACTOR uses effective procedures that yield the specified compaction test results. Flooding and jetting shall not be done in such a manner that the pipe or nearby utilities are damaged, in areas of poorly draining or expansive soils, or where the use of the procedure is prohibited by any agency having jurisdiction over the street or right-of-way. Approved jet pipes or immersible vibrators shall be used so that each backfill layer is saturated and consolidated to its full depth before the next layer is placed. Jet pipes shall be kept at least 6 inches away from the pipe where the backfills being consolidated and 2 feet away from other pipes or utilities.

H. Equipment weighing more than 10,000 pounds shall not be used closer to walls than a horizontal distance equal to the fill at that time. Hand operated power compaction equipment shall be used where use of heavier equipment is impractical or restricted due to weight limitations.

I. Compaction Requirements: The following compaction test requirements shall be in accordance with AASHTO T-180, T-99-C or ASTM D 2487 as applicable. Where agency or utility company requirements govern, the highest compaction standards shall apply.

Location or Use of Fill	Percentage of Maximum Density AASHTO T-180	Testing Frequency 1 per lift per
Pipe zone backfill portion above bedding for flexible pipe.	100	100 LF
Pipe zone backfill bedding and over-excavated zones under bedding/pipe for flexible pipe, including trench plugs.	100	100 LF
Pipe zone backfill portion above bedding for rigid pipe.	100	100 LF
Pipe zone backfill bedding and over-excavated zones under bedding/pipe for rigid pipe.	100	100 LF
Final backfill, beneath paved areas or structures.	100	10,000 SF
Final backfill, not beneath paved areas or structures.	95	20,000 SF
Trench zone backfill, not beneath paved areas or structures, including trench plugs.	95	100 LF
Embankments.	98	20,000 LF
Embankments, beneath paved areas or structures.	100	10,000 SF
Backfill beneath structures, hydraulic structures.	100	100 SF
Backfill around structures.	98	100 SF
Topsoil (type 14 material)	85	20,000 SF
Aggregate base or subbase (type 11or 12 material)	100	10,000 SF

J. Trench Backfill Requirements: the pipe has been structurally designed based upon the trench configuration specified herein.

K. The CONTRACTOR shall maintain the indicated trench cross section up to a horizontal plane lying 6 inches above the top of the pipe.

L. If, at any location under said horizontal plane, the CONTRACTOR slopes the trench walls or exceeds the maximum trench widths indicated in the Contract Documents, the pipe zone backfill shall be "improved" or the pipe class increased as specified herein, at no additional cost to the CITY. "Improved" backfill shall mean sand-cement backfill or other equivalent materials acceptable to the ENGINEER.

M. If the allowable deflection specified for the pipe is exceeded, the CONTRACTOR shall expose and reround or replace the pipe, repair all damaged lining and coating, and reinstall the pipe zone material and trench backfill as specified at no additional expense to the CITY.

3.15 PIPE AND UTILITY TRENCH BACKFILL

A. Pipe Zone Backfill: The pipe zone is defined as that portion of the vertical trench cross-section lying between a plane 6 inches below the bottom surface of the pipe, i.e., the trench subgrade, and a plane at a point 6 inches above the top surface of the pipe. The bedding for flexible pipe is defined as that portion of pipe zone backfill material between the trench subgrade and the bottom of the pipe. The bedding for rigid pipe is defined as that portion of the pipe zone backfill material between the trench subgrade and a level line which varies from the bottom of the pipe to the springline as shown.

B. Bedding shall be provided for all sewers, drainage pipelines, and other gravity flow pipelines. Unless otherwise specified or shown, for other pipelines the bedding may be omitted if all the following conditions exist.

1. The pipe bears on firm, undisturbed native soil which contains only particles that will pass a one-inch sieve.

2. The excavation is not through rock or stones.

3. The trench subgrade soils are classified as suitable fill and backfill materials per Paragraph 2.01.

4. The trench subgrade soils have, as a maximum, a moisture content that allows compaction.

C. Where bedding is required, after compacting the bedding the CONTRACTOR shall perform a final trim using a stringline for establishing grade, such that each pipe section when first laid will be continually in contact with the bedding along the extreme bottom of the pipe. Excavation for pipe bells and welding shall be made as required.

D. The pipe zone shall be backfilled with the specified backfill material. The pipe zone shall be well tamped per manufacturer's recommendation to prevent sags or settlement of the pipe. The CONTRACTOR shall exercise care to prevent damage to the pipeline coating, cathodic bonds, or the pipe itself during the installation and backfill operations.

E. Trench Zone Backfill: After the pipe zone backfill has been placed as specified above, and after all excess water has completely drained from the trench, backfilling of the trench zone may proceed. The trench zone is defined as that portion of the vertical trench cross-section lying between a plane 6 inches above the top surface of the pipe and a plane at a point 18 inches below the finished surface grade, or if the trench is under pavement, 18 inches below the roadway subgrade. If flooding, ponding, or jetting is used the pipe shall be filled with water to prevent flotation.

F. Final Backfill: Final backfill is all backfill in the trench cross-sectional area within 18 inches of finished grade, of if the trench is under pavement, all backfill within 18 inches of the roadway subgrade.

3.16 EMBANKMENT CONSTRUCTION

A. The area where an embankment is to be constructed shall be cleared of all vegetation, roots and foreign material. Following this, the surface shall be moistened, scarified to a

depth of 6 inches, and rolled or otherwise mechanically compacted. Embankment fill material shall be placed and spread evenly in approximately horizontal layers. Each layer shall be moistened or aerated, as necessary. Unless otherwise approved by the ENGINEER, each layer shall not exceed 6 inches of compacted thickness. The embankment fill and the scarified layer of underlying ground shall be compacted to 95% of maximum density under structures and paved areas, and 90% of maximum density elsewhere.

B. When an embankment fill is to be made and compacted against hillsides or fill slopes steeper than 4:1, the slopes of hillsides or fills shall be horizontally benched to key the embankment fill to the underlying ground. A minimum of 12 inches normal to the slope of the hillside or fill shall be removed and recompacted as the embankment fill is brought up in layers. Material thus cut shall be recompacted along with the new fill material at the CONTRACTOR's expense. Hillside of fill slopes 4:1 or flatter shall be prepared in accordance with Paragraph A, above.

C. Where embankment or structure fills are constructed over pipelines, the first 4 feet of fill over the pipe shall be constructed using light placement and compaction equipment that does not damage the pipe. Heavy construction equipment shall maintain a minimum distance from the edge of the trench equal to the depth of the trench until at least 4 feet of fill over the pipe has been completed.

3.17 COMPACTION OF SUBGRADE SURFACES

A. Any soft areas exhibiting excessive weaving or unsatisfactory material identified during excavation, fill placement, compaction and proof testing shall be removed, replaced with suitable fill, and compacted as specified.

B. Prior to preparing the subgrade in low lying areas, perform the following procedures:

1. Drain standing water by gravity or with a pump. Water should not be discharged directly to a storm drain system;

2. After drainage of low area is complete, remove mulch, mud, debris, and other unsuitable material using equipment and methods that will minimize disturbance to the underlying soils;

3. Thoroughly compact subgrade as specified.

4. If proposed for fill, all muck, mud and other materials removed from above low areas shall be dried on-site by spreading in thin layers for observation by CITY or ENGINEER. If, after observation by CITY material is found to be unsuitable, it shall be removed from the site.

3.18 UNDERCUT EXCAVATION

A. When approved by CITY and recommended by the ENGINEER, the CONTRACTOR may be required to remove natural soil materials in areas where fills are to be placed when determined to be undesirable in their location or condition. The CONTRACTOR shall be required to remove the undesirable material and backfill with approved material properly compacted.

B. At locations where unstable soil is shown on the DRAWINGS or identified within the geotechnical engineering study, the removal and replacement of such soil shall be as directed on the DRAWINGS or as directed by the ENGINEER and the CITY.

C. At locations where soil is wet of optimum moisture, the CONTRACTOR shall provide a "good faith" effort in drying and discing these areas prior to completing undercut excavation as approved by the ENGINEER and CITY.

D. Where undercutting is required adjacent or beneath the location of the proposed drainage structure, undercut and backfill shall be done over a sufficient distance adjacent to the installation to prevent future operations from disturbing the completed drainage structure.

E. All material removed in the WORK of undercut excavation will be classified by the geotechnical engineer and CITY as either suitable for other use without excessive manipulation and utilized by the CONTRACTOR elsewhere in the WORK, or unsuitable for future use and disposed of by the CONTRACTOR as directed by the ENGINEER.

F. The CONTRACTOR shall conduct undercut operations in such a way that the necessary measurements can be taken before any backfill is placed.

G. Backfill in undercut areas shall be placed as a continuous operation along with the undercutting operation. No backfill material shall be placed in water unless otherwise permitted by the ENGINEER.

3.19 EXCAVATION, FILL, AND SUBGRADE PREPARATION

A. General

1. The building limits shall be as identified on the construction DRAWINGS. The building subgrade shall be constructed to include a minimum of 10 feet beyond the building limits, or as directed by the CITY;

2. Structures include buildings, footings, foundations, retaining walls, embankment berms for storm water detention basins, slabs, tanks, curbs, mechanical and electrical appurtenances or other man-made stationary features constructed above or below the ground surface;

3. The building pad subgrade shall be prepared in strict accordance with the geotechnical engineering study and these specifications, whichever is more stringent; and,

4. The CONTRACTOR shall cut or fill to the proposed subgrade elevations based on finished grades and the pavement thicknesses as shown on the DRAWINGS. Subgrade elevations shall be constructed to within 0 to minus ½ inch of the proposed grades specified.

B. Excavation

1. Where existing grades are above proposed subgrade elevation, excavate materials in the building areas to line and grade as shown in the DRAWINGS being careful not to over excavate beyond the elevations needed for building subgrades;

2. Excavate organic soils from within the building area. Excavated on-site organic soils, which are unsuitable for building fill, may be used in landscaped areas. Otherwise this material shall be disposed of off-site;

3. Unsuitable material, such as wood and any other deleterious materials determined to be unsuitable by the geotechnical engineer for use as on-site fill, shall be disposed of offsite.

C. Subgrade Preparation for Fill

1. Existing grades below building areas shall be leveled prior to fill placement. The CONTRACTOR shall remove existing lawn and top soil in these areas prior to placement of any fill; and,

2. All existing grades below building areas shall be proofrolled and compacted per this section.

D. Fill Placement

1. No fill material shall be placed in areas of standing water, in areas of frozen or thawing ground, or in areas that have not been approved by the ENGINEER;

2. No fill materials shall be placed during unfavorable weather conditions. When WORK is interrupted by heavy rains, fill operations shall not be resumed until all saturated surficial soils are returned to satisfactory moisture content as determined by the ENGINEER;

3. Fill lift surfaces shall be made smooth and free from ruts or indentations at the end of any workday when precipitation is forecast to prevent saturation of surficial fill material. Fill surfaces shall be graded to drain and sealed with a smooth drum roller at the completion of each work day;

4. The fill shall be placed in uniform loose lifts not exceeding 12 inches and compacted in systemic method to achieve at least 6 passes of the compactor. Larger lift thickness, but no greater than 2 feet shall be permitted if broken rock is utilized and placed at least 6 feet below of finished grade;

5. Shot rock may be utilized as engineered fill as approved by the ENGINEER;

6. Each lift shall be compacted to the minimum densities listed in this section as appropriate for the project and as specified in the geotechnical engineering study;

7. The CONTRACTOR shall adjust the water content by aeration or adding water to achieve the required density. Assist drying by discing, harrowing or pulverizing until moisture content is reduced to achieve proper compaction and facilitate the construction schedule;

8. Wet, saturated material shall be air dried as necessary to achieve the field densities specified in this Section. Removal and replacement shall not occur without prior approval or CITY. Removal and replacement shall be used if necessary to facilitate the construction schedule;

9. Remove areas of finished subgrade found to have insufficient compaction density of depth necessary and replace with suitable compacted fill as approved by the CITY or ENGINEER. Surface of subgrade after compaction shall be hard, uniform, smooth, stable, and true to grade and cross-section; and,

10. Fill placed on slopes greater than 1 vertical to 3 horizontal shall have each lift benched onto the slope at least 3 feet.

3.20 PROOFROLLING

A. The WORK covered by this subsection consists of furnishing and operating, proofrolling equipment at the direction of the ENGINEER.

B. Proofrolling shall be under the observation of the geotechnical engineer as described herein and under the following schedule:

1. Immediately following the completion of excavation to proposed subgrades in cut areas, proofrolling shall be performed as specified; and,

2. Immediately prior to and following stone base course placement, in pavement and building pad areas for final floor slab preparation, all subgrade and stone base areas shall be proofrolled. Any areas which deflect, rut or pump under the loaded dump truck shall be undercut and replaced with compacted fill material or stone base course as directed by the ENGINEER and approved by the CITY, at no additional cost to the CITY.

C. Proofrolling shall be done with 1 pass of a fully loaded tandem dump truck equal to or exceeding 50,000 pounds or other construction equipment if approved by the ENGINEER.

D. Construction methods shall be as follows:

1. After the subgrade or stone base course has been completed the subgrade or stone base course shall then be proofrolled. The coverage areas and methods will be identified by the ENGINEER;

2. The equipment shall be operated at a speed that the ENGINEER can comfortably and slowly walk alongside the equipment;

3. If it becomes necessary to take corrective action, such as but not limited to underdrain installation, undercut and backfill of an unsuitable material, and aeration of excessively wet material in areas that have been proofrolled, see Paragraph 3.18. These areas shall be proofrolled again following the completion of the necessary corrections. If the corrections are necessary due to the negligence of the CONTRACTOR, the corrective WORK and additional proofrolling shall be performed by the CONTRACTOR at no cost to the CITY;

4. The CONTRACTOR shall protect all structural facilities on the project, such as but not limited to box culverts, pipe culverts, and utilities, from damage by the proofrolling equipment.

3.21 MAINTENANCE OF SUBGRADE

A. Finished subgrades shall be verified by the CONTRACTOR to ensure proper elevation and conditions for construction above subgrade.

B. Protect subgrade from excessive construction traffic and wheel loading including concrete and dump trucks.

C. Remove areas of finished subgrade judged to be unsatisfactory to the depth necessary and replace in a manner that will comply with compaction requirements by use of material equal to or better than the best subgrade material on site. Surface of subgrade after compaction shall be hard, uniform, smooth, stable, and true to grade and cross-section.

3.22 CORRECTION OF GRADE

A. Bring to required grade levels areas where settlement, erosion or other grade changes occur.

3.23 MAINTENANCE AND PROTECTION OF WORK

A. While construction is in progress adequate drainage for the roadbed shall be maintained at all times.

B. The CONTRACTOR shall maintain all earthwork construction throughout the life of the contract, unless otherwise provided, and shall take all reasonable precautions to prevent loss of material from the roadway due to the action of wind or water. The CONTRACTOR shall repair without any additional expense to the CITY, except as otherwise provided herein, any slides, washouts, settlement, subsidence, or other mishap which may occur prior to final acceptance of the WORK.

C. All channels excavated as a part of the contract WORK shall be maintained against natural shoaling or other encroachments to the lines, grades, and cross sections shown on the plans, until final acceptance of the project.

3.24 AS-BUILT SURVEY

A. At the completion of the WORK and prior to final inspection of the area, the CONTRACTOR shall provide the ENGINEER with an as-built topographic survey made by a Florida Licensed Professional Surveyor & Mapper.

B. The Florida Licensed Professional Surveyor & Mapper is to certify on the survey whether or not the as-built conditions conform to the elevations shown on the DRAWINGS to within plus or minus one- tenth (0.1) of a foot.

3.25 MEASUREMENT AND PAYMENT

A. There shall be no special measurement or payment for the WORK under this section, it shall be included in the associated bid item for this WORK.

-END OF SECTION -

SECTION 02481

TREE RELOCATION AND PROTECTION

PART 1 – GENERAL

1.01 WORK TO BE PERFORMED AND WORK INCLUDED

A. Hire a Certified Landscape Architect and/or ISA Certified Arborist as necessary to prepare Tree Disposition, Relocation and Installation Plans as required to obtain all necessary permits with the limits of the City Right of Way.

B. Prepare and relocate trees and palms designated for relocation within the project boundaries, to include all aspects of preparation, relocation, protection, and maintenance.

C. Protection and care of existing trees and palms to remain within the project boundaries, to include all aspects of protection, pruning, fertilization, and watering.

D. Watering by water truck.

E. Follow up maintenance as required by these Specifications.

F. Labor, materials, equipment, and services to complete all preparation, relocations and protection work as shown on the Drawings, as specified herein, or both.

1.02 SUBMITTALS

A. Copy of all permits submitted for tree relocations and removals.

B. Verification of Qualifications: The Contractor shall provide a list of references and project list of a minimum of five (5) projects that the Contractor has successfully completed that are similar in scope and nature.

C. List of all equipment to be utilized during tree preparation and transplanting.

D. Literature on specified wetting agents, fertilizers, and soil conditioners.

1.03 APPLICABLE STANDARDS AND SPECIFICATIONS

A. Comply with the following standards and specifications for all materials, methods, and workmanship unless otherwise noted:

1. Codes and Standards of the American Association of Nurserymen.

2. Codes and Standards of the National Arborists Association.

3. Codes and Standards of the International Society of Arboriculturists.

1.04 PERMITS

A. The Contractor shall secure any permits required, including tree removal and tree relocation permits, in order to complete the work under this Section. Cost of permit fees associated with tree removals and/or relocations shall be paid for under the “Permits Allowance” bid item.

1.05 DESCRIPTION

A. Trees to be relocated within the project area will be specifically designated in the field as project work progresses or as noted in tree disposition plans on the drawings.

B. Existing trees to be relocated shall be crown pruned and be treated with soil amendments prior to relocation.

C. Existing trees to be relocated or to remain shall be protected with barricades during construction. Trees or shrubs to remain which are scarred or destroyed shall be replaced at the direction of the City Forester with the same species, size, and quality at no cost to the City.

D. Tree pits resulting from relocated material shall be backfilled with clean fill and brought flush with surrounding grade.

1.06 GUARANTEES

A. The Contractor shall guarantee his work in the following way:

1. Any tree or palm that dies or is deemed in unacceptable condition for one year following final project acceptance shall be removed by the Contractor, including root ball, and backfilling of pit, at no cost to the City.

2. The Contractor shall provide a comparable specimen at no additional cost to the City.

3. The guarantee shall be enforced if it is deemed by the City Forester that tree mortality or decline is a product of negligence by the Contractor.

PART 2 – MATERIALS

2.01 SOIL AMENDMENTS

A. Root stimulant shall be Roots Biostimulant, concentrate or powder, as manufactured by LISA Products Corp., (305) 797-6801, or City-approved equal. Stimulant shall be applied either as a wash, or by injection, mixed per manufacturer’s recommendation.

B. Soil conditioner shall be Lesco Wet, as manufactured by Lesco, Inc. or NoburN, as manufactured by Roots or City-approved equal.

C. Minor element liquid fertilizer mix shall be Micro Mix liquid as produced by Lesco, Inc., or equal; to be diluted at a rate of 1 gallon per 100 gallons of water and applied at a rate of 50 gallons per 1,000 square feet of canopy, or Iron Roots, applied per manufacturer’s instructions.

D. Time Release Fertilizer tablets shall be Agriform, 15 grams, designation 8-8-8; or approved equal.

2.02 EQUIPMENT

A. Soil amendments shall be injected into the soil by means of a spray apparatus utilizing mechanical agitation to keep powdered amendments suspended.

B. Root pruning equipment shall be designed for this task, and shall produce clean cuts of roots without damage to the resulting root ball.

C. Relocation equipment shall be capable of lifting and transporting trees without damage.

2.03 SOIL

A. Soil to be placed once trees or palms are transplanted shall meet the requirements specified in the Contract Documents.

2.04 WATER

A. Water shall be clean and potable.,

2.05 MULCH

A. Grade A Eucalyptus mulch, free of viable weed seeds.

2.06 BRACING AND STAKES

A. All bracing and stakes shall be pressure treated pine. Compression bands shall be stainless steel.

PART 3 – EXECUTION

3.01 EXCAVATING NEAR EXISTING TREES

A. Maintain a minimum 6-foot clearance from all tree trucks except palm trees.

B. Use a 24-inch minimum depth saw cut in pavement or dirt/gravel roadway before start of excavation in areas where there are large trees close to the construction area. No coating application is required after saw cutting roots.

3.02 PREPARATION FOR RELOCATION OF TREES AND PALMS WITHIN THE PROJECT BOUNDARIES

A. Crown Pruning: All trees and palms shall be crown pruned prior to relocation.

1. Broadleaf Trees:

a. All trees are to be trimmed by thinning the crown only, and not by reducing crown dimensions. Trim to conform to NAA Standards, including removal of dead wood.

b. Repair any existing injuries to trees including cavities and machinery marks.

2. Palms:

   a. Remove all fruits and seed pods, and all but the seven (7) youngest fronds.

   b. Tie all remaining fronds with untreated cotton twine or burlap straps.

B. Fertilization and Watering:

1. Preparation: Clear the root ball area of all foreign material, trash, etc., to expose undisturbed soil.

2. Application/Schedule:

   a. Trees shall be deep injection fertilized a minimum of 14 days prior to relocation. Specified liquid fertilizer shall be used and applied at the concentration and application rates stated herein.

   b. Mix wetting agent, biostimulant, and minor element mix to produce a single fluid with each component included at the specified concentration. Inject into the root zone within the limits of proposed root ball at the rate of 50 gallons fluid per 1,000 square feet of tree canopy, using only approved spray equipment.

   c. Form an earth berm 6 inches high outside the proposed root ball prior to watering. Water application shall saturate the root ball to its entire depth.

C. Root Pruning:

1. Technique:

   a. All trees shall be excavated by digging a trench a minimum of 36 inches deep by 6 inches wide, either by hand or with a trenching machine designed for this purpose. Provide continuous trenching around the tree or palm at a minimum distance of 30 inches from the trunk. Hand cut broadleaf tree roots after trenching to produce clean cuts with no splits or tears.

   b. Barricades: Barricade all root pruned trees and palms at outside of soil berm with minimum 4-foot chain link fence or other barricade approved by the City.

   c. Timing:

      1) All oaks to be relocated shall be maintained for a minimum of 10 weeks after root pruning prior to relocation.

      2) Palms shall be maintained a minimum of 4 weeks prior to relocation.

3.03 RELOCATION OF TREES AND PALMS

A. General: Trees to be relocated shall be as directed by the Engineer.

B. Preparation:

1. Trees and palms shall be injected with soil amendments a minimum of 14 days prior to relocation. Apply at manufacturer's recommended concentration and application rates.

2. Trees and palms shall be thoroughly soaked to the full depth of the root ball daily for seven (7) consecutive days prior to relocation.

3. Accurately locate position and elevation where all trees are intended to be planted, for verification by City Forester. Verify that no overhead or underground utilities, existing or proposed, conflict with proposed locations.

4. Ascertain that all proposed paths for machinery are clear of utilities and other obstructions.

C. Excavation of Tree Pits: Dig all pits with vertical sides and flat bottom. Existing soil may be utilized as backfill as directed by the City Forester. All Tree Pits to be lined with root barrier adjacent to roadways and sidewalks as directed by City.

D. Digging and Handling - Broadleaf Trees:

1. Notify City 2 business days in advance of each relocation to allow for observation of procedures.

2. Determine line of previous root pruning and excavate around root mass to leave area 12 inches out from line of root pruning undisturbed. Digging shall be accomplished so as to produce clean cuts on all roots without tearing or splitting. Trenching shall be a minimum of 36 inches deep.

3. Trees are to be handled in such a way as to avoid damage to bark and limbs subject to support cables or chains. Attach padded support cables or chains at multiple points where possible. Alternatively, tree trunks may be drilled and doweled for broadleaf trees. The City Forester reserves the right to require doweling in lieu of lifting by straps.

4. Root balls are to be undercut prior to lifting. Do not force tree from ground prior to undercutting. Ball depth to be determined upon assessing conditions at time of trenching, to keep intact the entire root ball.

5. Trees shall be properly wrapped during moving so trunks will not be scarred and damaged and to avoid broken limbs. Broken limbs or scarred trunks shall cause tree to be unacceptable and rejected at the City's option. Broken limbs and wounds which do not (in the judgment of the City Forester) cause the tree to be rejected shall be cleanly cut.

6. Transport plant material on vehicles of adequate size to prevent overcrowding, broken limbs, foliage damage or root ball damage.

7. Root balls and foliage shall be kept moist during all phases of relocation.

8. Partially backfill tree pits with 12 inches of approved planting soil prior to setting tree. This layer of soil to be thoroughly drenched prior to relocation to achieve a stable platform at the correct elevation so that the top of rootball is 1 inch above proposed grade.

9. Rotate tree prior to setting to achieve best positioning relative to adjacent trees and viewing angles.

E. Backfilling:

1. Flood bottom soil layer to settle tree into best position and to remove air pockets.

2. Continue to flood root ball as planting soil is deposited to ensure removal of all air pockets.

3. Create a saucer to retain water.

F. Bracing:

1. Support tree with machinery until bracing is complete.

2. Buttresses may support separate trunks on multiple trunk trees.

3. Maintain braces until completion of project. Removal of braces shall be by others.

G. Watering: Relocated trees shall by watered using water-truck. Watering schedule shall be: once per day for first 6 weeks; followed by 3 times per week for following 6 weeks.

- END OF SECTION -

SECTION 02920

SODDING

PART 1 - GENERAL

1.01 DEFINITIONS

A. Maintenance Period: Begin maintenance immediately after each area is planted (sod) and continue for a period of 8 weeks after all planting under this Section is completed.

B. Satisfactory Stand:

1. Grass or section of grass that has:

a. No bare spots larger than 3 square feet.

b. Not more than 10 percent of total area with bare spots larger than 1 square foot.

c. Not more than 15 percent of total area with bare spots larger than 6 square inches.

1.02 DELIVERY, STORAGE, AND PROTECTION

A. Sod:

1. Do not harvest if sod is excessively dry or wet to the extent survival may be adversely affected.

2. Harvest and deliver sod only after laying bed is prepared for sodding.

3. Roll or stack to prevent yellowing.

4. Deliver and lay within 24 hours of harvesting.

5. Keep moist and covered to protect from drying from time of harvesting until laid.

1.03 WEATHER RESTRICTIONS

A. Perform Work under favorable weather and soil moisture conditions as determined by accepted local practice.

1.04 SEQUENCING AND SCHEDULING

A. Prepare topsoil as specified in the Contract Documents, before starting Work of this Section.

B. Complete Work under this section within ten (10) days following completion of soil preparation.

C. Notify City at least three (3) days in advance of:

1. Each material delivery.

2. Start of planting activity.

D. Planting Season: Those times of year that are normal for such Work as determined by accepted local practice. At a minimum, Contractor shall avoid planting in January or February.

1.05 MAINTENANCE SERVICE

A. Contractor: Perform maintenance operations during maintenance period to include:

1. Watering: Keep surface moist.

2. Washouts: Repair by filling with topsoil, and replace sodded areas.

3. Mowing: Mow to 2 inches after grass height reaches 3 inches, and mow to maintain grass height from exceeding 3 1/2 inches.

4. Re-sod unsatisfactory areas or portions thereof immediately at the end of the maintenance period if a satisfactory stand has not been produced, at which time maintenance period shall recommence.

5. Re-sod during next planting season if scheduled end of maintenance period falls after September 15.

PART 2 – MATERIALS

2.01 FERTILIZER

A. Commercial, uniform in composition, free-flowing, suitable for application with equipment designed for that purpose. Minimum percentage of plant food by weight.

B. Mix:

1. Nitrogen: Sixteen.

2. Phosphoric Acid: Four.

3. Potash: Eight.

2.02 SOD

A. Unless a particular type of sod is called for, sod may be of either St. Augustine Floritam, Bahia grass or Seashore Paspalum, in accordance with the following:

1. Use Bahia grass where no irrigation system exists.

2. Use St. Augustine Floritam where an irrigation system is in place. If original sod being replaced is St. Augustine Floritam, replacement sod shall match.

3. Seashore Paspalum sod will be used in areas prone to salt water flooding.

B. Strongly rooted pads, capable of supporting own weight and retaining size and shape when suspended vertically from a firm grasp on upper 10 percent of pad.

1. Grass Height: Normal.

2. Strip Size: Supplier's standard, commercial size rectangles.

3. Soil Thickness: Uniform; 1-inch plus or minus 1/4-inch at time of cutting.

4. Age: Not less than 10 months or more than 30 months.

5. Condition: Healthy, green, moist; free of diseases, nematodes and insects, and of undesirable grassy and broadleaf weeds. Yellow sod, or broken pads, or torn or uneven ends will not be accepted

6. Any netting contained within the sod shall be certified by the manufacturer to be bio-degradable within a period of 3 months from installation.

PART 3 - EXECUTION

3.01 PREPARATION

A. Grade Areas to Smooth, Even Surface with Loose, Uniformly Fine Texture:

1. Roll and rake, remove ridges, fill depressions to meet finish grades.

2. Limit such Work to areas to be planted within immediate future.

3. Remove debris, foreign material and stones larger than 1 1/2 inches diameter, and other objects that may interfere with planting and maintenance operations.

B. Moisten prepared areas before planting if soil is dry. Water thoroughly and allow surface to dry off before seeding. Do not create muddy soil.

C. Restore prepared areas to specified condition if eroded or otherwise disturbed after preparation and before planting.

D. Limit preparation to those areas that can be sodded within 72 hours after preparation.

3.02 FERTILIZER

A. Apply evenly over area in accordance with manufacturer's instructions. Mix into top 2 inches of top soil.

B. Application Rate: 20 pounds per 1,000 square feet (1,000 pounds per acre).

3.03 SODDING

A. Do not plant dormant sod, or when soil conditions are unsuitable for proper results.

B. Pre-wet the area prior to placing sod. Lay sod to form solid mass with tightly fitted joints; butt ends and sides, do not overlap:

1. Stagger strips to offset joints in adjacent courses.
2. Work from boards to avoid damage to subgrade or sod.
3. Tamp or roll lightly to ensure contact with subgrade; work sifted soil into minor cracks between pieces of sod, remove excess to avoid smothering adjacent grass.
4. Complete sod surface true to finished grade, even, and firm.

C. Fasten sod on slopes to prevent slippage with wooden pins 6 inches long driven through sod into subgrade, until flush with top of sod. Install at sufficiently close intervals to securely hold sod.

D. Water sod with fine spray immediately after planting. During first month, water daily or as required to maintain moist soil to depth of 4 inches.

3.04 FIELD QUALITY CONTROL

A. Eight weeks after sodding is complete and on written notice from Contractor, City will, within 15 days of receipt, determine if the sod has been satisfactorily established.

B. If the sod is not satisfactorily established, Contractor shall replace the sod and repeat the requirements of this Section.

- END OF SECTION -

SECTION 02930

LANDSCAPE WORK

PART 1 - GENERAL

1.01 DEFINITIONS

A. Measurement:

1. In size grading balled and burlapped (B & B), caliper takes precedence over height.

2. Take trunk caliper 6 inches above the ground level (up to and including 4-inch caliper size) and 12 inches above the ground level for larger trees.

3. Measure size of container-grown stock by height and width of plant.

4. Measure herbaceous perennials pot size, not top growth.

1.02 DELIVERY, STORAGE, AND HANDLING

A. Inspection and Transporting: Movement of nursery stock shall comply with all Federal, State, and local laws and regulations. Therefore, required inspection certificates shall accompany each shipment, and shall be submitted in accordance with Section 01300.

B. Cover plants during shipment with a tarpaulin or other suitable covering to minimize drying.

C. Balled and Burlapped Plants: Wrap each ball firmly with burlap and securely bind with twine, cord, or wire for shipment and handling. Drum-lace balls with a diameter of 30 inches or more. Wire wrap burlap if root ball is not sufficiently compacted. Palms will not require burlap wrapping if the following requirements are met:

1. Dug from marl or heavy soil that adheres to roots and retains shape without shattering.

2. Moistened material used to cover ball and roots not exposed to wind and sun.

3. Transport material on vehicles large enough to allow plants not to be crowded. Plants shall be covered to prevent wind damage during transit and shall be kept moist, fresh and protected at all times. Such protection shall encompass the entire period which the plants are in transit, being handled, or are in temporary storage.

D. All plant material shall not remain on the work site longer than two (2) days prior to being installed.

E. As specified herein for transplanting.

1.03 MAINTENANCE

A. Commence to maintain plant life immediately after planting and maintain for a minimum of one growing season, and until plants are well established and exhibit a vigorous growing condition.

B. In accordance with accepted submittal on care and maintenance of plants and as follows:

1. Maintain by watering, pruning, cultivating, and weeding as required for healthy growth. Restore planting saucers.

2. Tighten and repair stake and guy supports and reset trees and shrubs to proper grades or vertical position as required.

3. Restore or replace damaged wrappings. Spray as required to keep trees and shrubs free of insects and disease.

4. Remove guys, stakes, and other supports at end of maintenance service.

5. Maintenance includes temporary protection fences, barriers, and signs as required for protection.

6. Coordinate watering to provide deep root watering to newly installed trees.

1.04 SCHEDULING AND SEQUENCING

A. Plant Deliveries: Notify Engineer at least 3 days in advance of each delivery.

B. Planting Season: Conduct planting during times of year that are normal for such work as determined by accepted local practice.

C. Plant trees and shrubs after final grades are established and before planting of lawns or grasses.

PART 2 – MATERIALS

2.01 PLANT MATERIALS

A. Provide quantity, size, genus, species, and variety of trees and shrubs indicated; comply with applicable requirements of ANSI Z60.1.

B. Nomenclature (Names of Plants): In accordance with “Hortus Third”.

C. Quality and Size:

1. Nursery-grown, habit of growth normal for species.

2. Sound, healthy, vigorous, and free from insects, diseases, and injuries - Florida #1 quality or better.

3. Equal to or exceeding measurements specified in plant list. Measure plants before pruning with branches in normal position.

4. Root System of Container-Grown Plants: Well developed and well distributed throughout the container, such that the roots visibly extend to the inside face of the growing container.

5. Perform necessary pruning at time of planting.

6. Sizes: Dimensional relationship requirements of ANSI Z60.1 for kind and type of plants required.

7. Balled and Burlapped Plants: Firm, intact ball of earth encompassing enough of the fibrous and feeding root system to enable full plant recovery.

    a. Ball Size: ANSI Z60.1.

8. Container-Grown Plants: Self-established root systems, sufficient to hold earth together after removal from container, without being rootbound.

    a. Stock: Grown in delivery containers for at least 6 months, but not over 2 years.

9. Label each tree and shrub of each variety with securely attached waterproof tag, bearing legible designation of botanical and common name.

10. All trees must have a fully developed fibrous root system, be heavily branched, or in palms, heavily leafed, free from all insects, fungus, and other diseases.

11. Palms: Wrap the roots of all plants of the palm species before transporting, except if they are container grown plants and ensure that they have an adequate root ball structure, and mass for healthy transplantation as defined in “Florida Grades and Standards for Nursery Plants.”

12. Burlapping is not required if the palm is carefully dug from marl or heavy soil that adheres to the roots and retains its shape without crumbling. During transporting and after arrival, carefully protect root balls of palms from wind and exposure to the sun. Muck grown palms are not allowed. After delivery to the job site, if not planting the palm within 24 hours, cover the root ball with a moist material. Plant all palms within 48 hours of delivery to the site.

13. Move sabal and coconut palms in accordance with the “Florida Grades and Standards for Nursery Plants.”

D. Replacement Shrubs and Trees: Same species, size, and quality as specified for plant being replaced, except existing trees larger than 4-inch caliper, may be replaced with 4-inch caliper trees to satisfy the caliper inches lost.

2.02 ANTIDESICCANT

A. Provide transpiration retarding material to be used where any plant material is moved during the growing season.

2.03 GUYING, STAKING, AND WRAPPING MATERIALS

A. Wood Stake: 2 inches by 2 inches by 8 feet.

B. Guy Wires: Galvanized, 12-gauge, ductile steel.

C. Flags:

1. Wood: 1/2-inch by 3 inches by 12 inches, with 3/8-inch hole centered 1-1/2 inches from each end, painted white.

2. Sheet Metal: 1-1/2-inch with clipped corners and both ends punched, painted white.

D. Hose: Two-ply, reinforced rubber garden hose, not less than 1/2-inch diameter, new or used.

E. Burlap: Of first quality, minimum 8 ounces in weight, not less than 6 inches nor more than 10 inches in width.

2.04 MULCH

A. Mulch shall be free from noxious weed seed and foreign material harmful to plant growth and shall be an approved non-native tree bark mulch. It must be uniformly shredded and be free from large pieces of bark, foreign matter, weed seeds and any other organic or inorganic material.

B. Barkdust: Medium grind, pine; maximum 3/4-inch particle size.

2.05 PLANTING SOIL MIX

A. Proportion by Weight: 75% approved good quality top soil mixed with 25% approved organic matter as approved by Engineer. The soil must be taken from ground that has never been stripped, with a slight acid reaction (5.5 to 6.5 ph) and without an excess of calcium or carbonate. Soil shall have a loose friable condition.

B. Special Type: Planting soil for palms shall be a good grade of salt free sand, which is free of all weeds.

2.06 TOPSOIL

A. General: Uniform mixture of 75 percent good grade of clean, salt free, weed free sand and 25 percent organic material in a loose friable condition, free from objects larger than 1-1/2 inches maximum dimension, and free of subsoil, roots, grass, other foreign matter, hazardous or toxic substances, and deleterious material that may be harmful to plant growth or may hinder grading, planting, or maintenance.

B. Textural Amendments: Amend as necessary to conform to required composition.

C. Source: Import topsoil if onsite material fails to meet specified requirements or is insufficient in quantity.

D. 95% of topsoil shall pass a ¼ inch sieve.

E. Organic matter content shall be 4% to 12% of total dry weight.

2.07 SOURCE QUALITY CONTROL

A. Topsoil Analysis/Testing: Performed by county or state soil testing service or approved certified independent testing laboratory.

B. Should soil tests prove the topsoil to alkaline or above the accepted minimum for salt content, the topsoil shall be removed and replaced by acceptable material at Contractor's expense.

PART 3 - EXECUTION

3.01 TRANSPLANTING

A. Remove existing plantings identified for transplant prior to beginning Work in area in accordance with standard nursery practices and as specified herein.

B. Nondormant Plants: Prior to digging, spray foliage with antidesiccant, as recommended by manufacturer.

C. Cover balls and containers of plants that cannot be planted immediately, with moist soil or mulch.

D. Water plants as often as necessary to prevent drying until planted.

E. Do not remove container-grown stock from containers before time of planting.

F. Bare-Root Plants:

1. Dig up with least possible injury to fibrous root system.

2. Immediately upon removal from ground, cover roots with thick coating of mud or wrap in wet straw, moss, or other suitable packing material for protection from drying until planted.

3. Plant or heel-in immediately upon relocation to temporary storage. Open and separate bundles of bare-root plants, and eliminate air pockets among roots as they are covered.

G. Replant each temporarily removed tree, shrub, or other plant only after construction activities are completed and applicable grading and topsoil replacement is completed in its vicinity. Replant trees, shrubs, and other plants in their original positions unless otherwise shown or approved. Plant as specified for new plants.

H. Maintain transplanted materials in same manner as new trees and shrubs.

3.02 LOCATION OF PLANTS

A. Locate new planting or stake positions as shown unless obstructions are encountered, in which case notify Engineer.

B. Locate no planting, except ground cover, closer than 18 inches to pavements, pedestrian pathways, and structures.

C. Request Engineer observe locations, and adjust as necessary before planting begins.

3.03 PREPARATION

A. Subsoil Drainage: Furnish for plant pits and beds.

B. Planting Soil: Delay mixing of amendments and fertilizer if planting will not follow preparation of planting soil within 2 days. For pit and trench type backfill, mix planting soil prior to backfilling and stockpile at site.

C. Plants: Place on undisturbed existing soil or well-compacted backfill.

D. Trees and Shrubs:

1. Pits, Beds, and Trenches: Excavate with vertical and scarified sides.

2. B & B Trees and Shrubs: Make excavations at least twice as wide as root ball.

3. Container-Grown Stock: Excavate as specified for B & B stock, adjust for size of container width and depth.

4. Bare-Root Trees: Excavate pits to a width to just accommodate roots fully extended and depth to allow uppermost roots to be below original grade.

5. Fill excavations with water and allow to percolate out prior to planting.

E. Ground Cover Beds:

1. Mix amendments and fertilizer with top soil prior to placing or apply on surface of top soil and mix thoroughly before planting.

2. Scarify top soil to a depth of 4 to 6 inches.

3. Establish finish grading of soil. Rake areas to smooth and create uniform texture and fill depressions.

4. Moisten.

3.04 PLANTING

A. Plant trees before planting surrounding smaller shrubs and ground covers. Adjust plants with most desirable side facing toward the prominent view (sidewalk, building, street).

B. B & B Plants: Place in pit by lifting and carrying by its ball (do not lift by branches or trunk). Lower into pit. Set straight and in pit center with tip of rootball 1 to 2 inches above adjacent finish grade.

C. Bare-Root Plants: Spread roots and set stock on cushion of planting soil mixture. Set straight in the pit center so that roots, when fully extended, will not touch walls of the

planting pit and the uppermost root is just below finish grade. Cover roots of bare-root plants to the crown.

D. Container-Grown Plants: Remove containers, slash edges of rootballs from top to bottom at least 1-inch deep. Plant as for B & B plants.

E. Ground Covers: Dig planting holes through mulch with one of the following: hand trowel, shovel, bulb planter, or hoe. Split biodegradable pots or remove nonbiodegradable pots. Root systems of all potted plants shall be split or crumbled. Plant so roots are surrounded by soil below the mulch. Set potted plants so pot top is even with existing grade.

3.05 BACKFILLING

A. Backfill with planting soil, except where existing soil is suitable according to top soil analysis.

B. B & B Plants:

1. Partially backfill pit to support plant. Remove burlap and binding from sides and tops of B & B plants, do not pull burlap from under balls.

2. When excavation is approximately 2/3 full, water thoroughly before placing remainder of backfill to eliminate air pockets even if it is raining. Finish backfilling pit sides.

3. Never cover top of rootball with soil. Form a saucer above existing grade, completely around the outer rim of the plant pit.

C. Bare-Root Plants:

1. Plumb before backfilling and maintain plumb while working backfill around roots and placing layers above roots.

2. Set original soil line of plant 1-inch to 2 inches above adjacent finish landscape grades. Spread out roots without tangling or turning up to surface. Cut injured roots cleanly; do not break.

3. Carefully work backfill around roots by hand; puddle with water until backfill layers are completely saturated.

3.06 GUYING AND STAKING

A. Support trees immediately after planting to maintain plumb position.

B. Guying: Support all trees over 4 inches in caliper with 3 guys equally.

C. Special Requirements for Palm Trees: Brace palms which are to be staked with three 2-inch by 4-inch wood braces, toe-nailed to cleats which are securely banded at two points to the palm, at a point one third the height of the trunk. Pad the trunk with five layers of burlap under the cleats. Place braces approximately 120 degrees apart and secure them underground by 2- by 4- by 12-inch stake pads.

3.07 SUBGRADE PREPARATION

A. The subgrade shall be 4 inches lower than finished grade with 2 inches of topsoil added to sod areas.

B. Scarify subgrade to minimum depth of 6 inches where topsoil is to be placed.

C. Remove stones over 2-1/2 inches in any dimension, sticks, roots, rubbish, and other extraneous material.

D. Limit preparation to areas which will receive topsoil within 2 days after preparation.

3.08 TOPSOIL PLACEMENT

A. Topsoil Thickness:

1. Sodded Areas: 2 inches.

2. Planting Beds: 6 inches.

3. Planting Beds in Roadways and Parking Lots: All planting areas shall be excavated to a minimum depth of 24” or greater as needed to remove all road base/rock down to native soil prior to backfilling with approved planting soil.

B. Do not place topsoil when subsoil or topsoil is excessively wet or otherwise detrimental to the Work.

C. Mix soil amendments with topsoil before placement or spread on topsoil surface and mix thoroughly into entire depth of topsoil before planting or seeding.

D. Uniformly distribute to within 1/2-inch of final grades. Fine grade topsoil eliminating rough or low areas and maintaining levels, profiles, and contours of subgrade.

E. Remove stones exceeding 1-1/2 inches, roots, sticks, debris, and foreign matter during and after topsoil placement.

F. Remove surplus subsoil and topsoil from site. Grade stockpile area as necessary and place in condition acceptable for planting or seeding.

3.09 MULCHING

A. Cover planting beds and area of saucer around each plant with 3-inch thick layer of mulch within 2 days after planting. Saturate planting area with water.

3.10 PRUNING AND REPAIR

A. Prune only after planting and in accordance with standard horticultural practice to preserve natural character of the plant. Perform in presence of Engineer or City’s representative. Remove all dead wood, suckers, and broken or badly bruised branches. Use only clean, sharp tools. Do not cut lead shoot.

B. For Existing Trees Impacted by Construction Activities:

1. Maintain a minimum 6-foot clearance from the trunk of all trees except palm trees. Existing trees to remain shall be protected during all construction phases. Protective barriers shall be provided at the drip line of existing trees adjacent to construction operations. Replacement of any trees that are damaged or destroyed due to the Contractor's operations shall be the Contractor's responsibility and shall be replaced at the Contractor's expense

2. Where roots of trees are encountered in the excavation area, use a 24-inch deep saw cut prior to excavation. Roots shall not be torn by excavating equipment. Hand dig around roots. Cut roots do not require coating.

3. Overhead branches not trimmed prior to construction and interfering with construction activities will be pruned and cut as approved by the City Forester and not torn or broken off with excavating equipment.

3.11 WEED CONTROL

A. Maintain a weed-free condition within planting areas. Apply pre-emergent selective herbicide to mulched beds at manufacturer's recommended rate of application.

3.12 PROTECTION OF INSTALLED WORK

A. Protect planting areas and plants against damage for duration of maintenance period.

3.13 ROOT BARRIERS

A. Root barriers shall be installed parallel to all trees (except palms) when there is a sidewalks, roadway or utility adjacent to the planting area. Root barriers will be installed as directed by Engineer.

- END OF SECTION -

SECTION 03100

CONCRETE FORMWORK

PART 1 – GENERAL

1.01 THE REQUIREMENT

A. The Contractor shall design and furnish all materials for concrete formwork, bracing, and supports and shall design and construct all falsework, all in accordance with the provisions of the Contract Documents.

1.02 RESPONSIBILITY

A. The design and engineering of the formwork as well as safety considerations are the responsibility of the Contractor.

1.03 RELATED WORK SPECIFIED ELSEWHERE

A. Section 01300 - Submittals

B. Section 03200 - Concrete Reinforcement

C. Section 03300 - Cast in Place Concrete

D. Section 03315 - Grout

1.04 REFERENCE SPECIFICATIONS, CODES, AND STANDARDS

A. Without limiting the generality of other requirements of these Specifications, all work specified herein shall conform to or exceed the requirements of the Building Code and the applicable requirements of the following documents to the extent that the provisions of such documents are not in conflict with the requirements of this Section.

1. Codes and Standards

   a. The Building Code, as referenced herein, is the Florida Building Code (FBC).

2. Government Standards

   a. PS 1U.S. Product Standard for Concrete Forms, Class I.

3. Commercial Standards

   a. ACI 347 Recommended Practice for Concrete Formwork.

   b. ACI 318R Building Code Requirements for Reinforced Concrete.

   c. ACI 350Code Requirements for Environmental Engineering Concrete Structures

1.05 QUALITY ASSURANCE

A. The variation from established grade or lines shall not exceed 1/4 inch in 10 feet and there shall be no offsets or visible bulges or waviness in the finished surface. All tolerances shall be within the "Suggested Tolerances" specified in ACI 347. The Contractor shall grind smooth all fins and projections between formwork panels as directed by the Engineer.

B. Curved forms shall be used for curved and circular structures that are cast-in-place. Straight panels will not be acceptable for forming curved structures.

PART 2 – PRODUCTS

2.01 FORM MATERIALS

A. Except as otherwise expressly accepted by the Engineer, all lumber brought on the job site for use as forms, shoring, or bracing shall be new material. All forms shall be smooth surface forms and shall be of the following materials:

1.	Footing sides	-	Construction grade Hem Fir or Douglas Fir
2.	Walls	-	Steel or plywood panel
3.	Columns	-	Steel, plywood or fiber glass
4.	Roof and floor Slabs	-	Plywood
5.	All other work	-	Steel panels, plywood or tongue and groove lumber

B. Materials for concrete forms, formwork, and falsework shall conform to the following requirements:

1. Lumber shall be Southern Pine, construction grade or better, in conformance with U.S. Product Standard PS20.

2. Plywood for concrete formwork shall be new, waterproof, synthetic resin bonded, exterior type Douglas Fir or Southern Pine plywood manufactured especially for concrete formwork and shall conform to the requirements of PS I for Concrete Forms, Class I, and shall be edge sealed. Thickness shall be as required to support concrete at the rate it is placed, but not less than 5/8 inch thick.

2.02 PREFABRICATED FORMS

A. Form materials shall be metal, wood, plywood, or other acceptable material that will not adversely affect the concrete and will facilitate placement of concrete to the shape, form, line, and grade indicated. Metal forms shall be an acceptable type that will accomplish such results. Wood forms for surfaces to be painted shall be Medium Density Overlaid plywood, MDO Ext. Grade.

2.03 FORMWORK ACCESSORIES

A. Exterior corners in concrete members shall be provided with 3/4-inch chamfers. Reentrant corners in concrete members shall not have fillets unless otherwise shown.

B. Form ties shall be provided with a plastic cone or other suitable means for forming a conical hole to insure that the form tie may be broken off back of the face of the concrete. The maximum diameter of removable cones for rod ties, or of other removable form tie fasteners having a circular cross section, shall not exceed 1 1/2 inches; and all such fasteners shall be such as to leave holes of regular shape for reaming.

C. Form ties for water-retaining structures shall have integral waterstops. Removable taper ties may be used when acceptable to the Engineer. At locations where removable taper ties are acceptable, a preformed mechanical EPDM rubber plug shall be used to seal the hole left after the removal of the taper tie. Plug shall be X-Plug by the Greenstreak Group, Inc., or approved equal. Friction fit plugs shall not be used.

D. Form release agent shall be a blend of natural and synthetic chemicals that employs a chemical reaction to provide quick, easy and clean release of concrete from forms. It shall not stain the concrete and shall leave the concrete with a paintable surface. Formulation of the form release agent shall be such that it would minimize formation of "Bug Holes" in cast-in-place concrete.

PART 3 – EXECUTION

3.01 EXAMINATION

A. Forms to confine the concrete and shape it to the required lines shall be used wherever necessary. The Contractor shall assume full responsibility for the adequate design of all forms, and any forms which are unsafe or inadequate in any respect shall promptly be removed from the Work and replaced at the Contractor's expense. A sufficient number of forms of each kind shall be provided to permit the required rate of progress to be maintained. The design and inspection of concrete forms and falsework, shall comply with applicable local, state and Federal regulations. Plumb and string lines shall be installed before concrete placement and shall be maintained during placement. Such lines shall be used by Contractor's personnel and by the Engineer and shall be in sufficient number and properly installed. During concrete placement, the Contractor shall continually monitor plumb and string line form positions and immediately correct deficiencies.

B. Concrete forms shall conform to the shape, lines, and dimensions of members as called for on the Drawings, and shall be substantially, free from surface defects, and sufficiently tight to prevent leakage. Forms shall be properly braced or tied together to maintain their position and shape under a load of freshly placed concrete.

C. All forms shall be true in every respect to the required shape and size, shall conform to the established alignment and grade, and shall be of sufficient strength and rigidity to maintain their position and shape under the loads and operations incident to placing and vibrating the concrete. Suitable and effective means shall be provided on all forms for holding adjacent edges and ends of panels and sections tightly together and in accurate alignment so as to prevent the formation of ridges, fins, offsets, or similar surface defects

in the finished concrete. Plywood, 5/8 inch and greater in thickness, may be fastened directly to studding if the studs are spaced close enough to prevent visible deflection marks in the concrete. The forms shall be tight so as to prevent the loss of water, cement and fines during placing and vibrating of the concrete. Specifically, the bottom of wall forms that rest on concrete footings or slabs shall be provided with a gasket to prevent loss of fines and paste during placement and vibration of concrete. Such gasket may be a 1 to 1 1/2-inch diameter polyethylene rod held in position to the underside of the wall form. Adequate clean out holes shall be provided at the bottom of each lift of forms. The size, number, and location of such clean outs shall be as acceptable to the Engineer.

D. Concrete construction joints will not be permitted at locations other than those shown or specified, except as may be acceptable to the Engineer. When a second lift is placed on hardened concrete, special precautions shall be taken in the way of the number, location, and tightening of ties at the top of the old lift and bottom of the new to prevent any unsatisfactory affect whatsoever on the concrete. Pipe stubs and anchor bolts shall be set in the forms where required.

3.02 EARTH FORMS

A. All vertical surfaces of concrete members shall be formed, except where placement of the concrete against the ground is called for on the Drawings. Not less than 1 inch of concrete shall be added to the thickness of the concrete member as shown where concrete is permitted to be placed against trimmed ground in lieu of forms. Such permission will be granted only for members of comparatively limited height and where the character of the ground is such that it can be trimmed to the required lines and will stand securely without caving or sloughing until the concrete has been placed.

3.03 FOOTINGS, SLAB EDGES AND GRADE BEAMS

A. Provide wood side forms for all footings, slab edges and grade beams.

3.04 APPLICATION - FORM RELEASE AGENT

A. Apply form release agent on formwork in accordance with manufacturer's recommendations.

3.05 INSERTS, EMBEDDED PARTS AND OPENINGS

A. Embedded Form Ties: Holes left by the removal of form tie cones shall be reamed with suitable toothed reamers so as to leave the surface of the holes clean and rough before being filled with mortar as specified for in Section 03350 entitled "Concrete Finishes". Wire ties for holding forms will not be permitted. No form tying device or part thereof, other than metal, shall be left embedded in the concrete. Ties shall not be removed in such manner as to leave a hole extending through the interior of the concrete members. The use of snap ties which cause spalling of the concrete upon form stripping or tie removal will not be permitted. If steel panel forms are used, rubber grommets shall be provided where the ties pass through the form in order to prevent loss of cement paste. Where metal rods extending through the concrete are used to support or to strengthen forms, the rods shall remain embedded and shall terminate not less than 1 inch back from the formed face or faces of the concrete.

3.06 FORM CLEANING

A. Forms may be reused only if in good condition and only if acceptable to the Engineer. Light sanding between uses will be required wherever necessary to obtain uniform surface texture on all exposed concrete surfaces. Exposed concrete surfaces are defined as surfaces which are permanently exposed to view. Unused tie rod holes in forms shall be covered with metal caps or shall be filled by other methods acceptable to the Engineer.

3.07 FORMWORK TOLERANCES

A. Formwork shall be constructed to insure that finished concrete surfaces will be in accordance with the tolerances listed in ACI 347.

1. The following construction tolerances are hereby established and apply to finished walls and slab unless otherwise shown in the Drawings:

Item	Tolerance
Variation of the constructed linear outline from the established position in plan	In 10 feet: 1/4 inch; In 20 feet or more: 1/2 inch
Variation from the level or from the grades shown on the Drawings	In 10 feet: 1/4 inch; In 20 feet or more: 1/2 inch
Variation from the plum	In 10 feet: 1/4 inch; In 20 feet or more: 1/2 inch
Variation in the thickness of slabs and walls	Minus 1/4 inch; Plus 1/2 inch
Variation in the locations and sizes of slab and wall openings	Plus or minus 1/4 inch

3.08 FORM REMOVAL

A. Remove top forms on sloping surfaces of concrete as soon as removal operations will not allow the concrete to sag. Perform any needed repairs or treatments required on sloping surfaces at once, and follow immediately with the specified curing.

B. The Contractor shall be responsible for the removal of forms and shores. Forms or shores shall not be removed before test cylinders have reached the specified minimum 28-day compressive strength for the class of concrete specified in Section 03300 entitled "Cast-in-Place Concrete", nor sooner than listed below:

1. Grade beam side forms .....3 days

2. Wall forms .....3 days

3. Column forms .....3 days

4. Beam and girder side forms .....3 days

5. Beam bottoms and slab forms/shores .....14 days

3.09 MAINTENANCE OF FORMS

A. Forms shall be maintained at all times in good condition, particularly as to size, shape, strength, rigidity, tightness, and smoothness of surface. Forms, when in place, shall conform to the established alignment and grades. Before concrete is placed, the forms shall be thoroughly cleaned. The form surfaces shall be treated with a nonstaining mineral oil or other lubricant acceptable to the Engineer. Any excess lubricant shall be satisfactorily removed before placing the concrete. Where field oiling of forms is required, the Contractor shall perform the oiling at least two weeks in advance of their use. Care shall be exercised to keep oil off the surfaces of steel reinforcement and other metal items to be embedded in concrete.

- END OF SECTION -

SECTION 03200

CONCRETE REINFORCEMENT

PART 1 – GENERAL

1.01 THE REQUIREMENT

A. The Contractor shall furnish, fabricate and place all concrete reinforcing steel, welded wire fabric, couplers, and concrete inserts for use in reinforced concrete and shall perform all appurtenant work, including all the wires, clips, supports, chairs, spacers, and other accessories and special work necessary to hold the reinforcing steel in place and protect it from injury and corrosion, all in accordance with the Contract Documents.

1.02 RELATED WORK SPECIFIED ELSEWHERE

A. Section 01300 - Submittals

B. Section 03100 - Concrete Formwork

C. Section 03300 - Cast in Place Concrete

D. Section 03315 - Grout

1.03 REFERENCE SPECIFICATIONS, CODES, AND STANDARDS

A. Without limiting the generality of other requirements of these specifications, all Work specified herein shall conform to or exceed the requirements of the Building Code and the applicable requirements of the following documents to the extent that the provisions of such documents are not in conflict with the requirements of this Section.

1. Codes and Standards

   a. The Building Code, as referenced herein, is the Florida Building Code (FBC).

2. Commercial Standards

a.	ACI 315	Details and Detailing of Concrete Reinforcement.
b.	CRSI	Concrete Reinforcing Steel Institute Manual of Standard Practice
c.	ACI SP66	ACI Detailing Manual
d.	ACI 305	Hot Weather Concreting
e.	ACI 318	Building Code Requirements for Reinforced Concrete.
f.	ACI 350	Code Requirements for Environmental Engineering Concrete Structures

g. WRI — Manual of Standard Practice for Welded Wire Fabric.

h. ASTM A 1064 — Specification for Steel Wire and Welded Wire Reinforcement, Plain and Deformed, for Concrete.

i. ASTM A 615 — Specification for Deformed and Plain Billet Steel Bars for Concrete Reinforcement.

1.04 SUBMITTALS

A. The Contractor shall furnish shop bending diagrams, placing lists, and Drawings of all reinforcing steel prior to fabrication in accordance with the requirements of the Section 01300 entitled, "Submittals." The Contractor shall submit detailed placing and shop fabricating drawings, prepared in accordance with ACI 315 and ACI Detailing Manual - (SP66) for all reinforcing steel. These drawings shall be made to such a scale as to clearly show joint locations, openings, the arrangement, spacing and splicing of the bars. Where opening sizes are dependent on equipment selection the Contractor shall indicate all necessary dimensions to define steel lengths and placing details.

B. Details of the concrete reinforcing steel and concrete inserts shall be submitted by the Contractor at the earliest possible date after receipt by the Contractor of the Notice to Proceed. Said details of reinforcing steel for fabrication and erection shall conform to ACI 315 and the requirements specified and shown. The shop bending diagrams shall show the actual lengths of bars, to the nearest inch measured to the intersection of the extensions (tangents for bars of circular cross section) of the outside surface. The shop Drawings shall include bar placement diagrams which clearly indicate the dimensions of each bar splice.

C. Where mechanical couplers are shown on the Drawings to be used to splice reinforcing steel, the Contractor shall submit manufacturer's literature which contains instructions and recommendations for installation for each type of coupler used; certified test reports which verify the load capacity of each type and size of coupler used; and shop Drawings which show the location of each coupler with details of how they are to be installed in the formwork.

D. Requests to relocate any bars that cause interferences or that cause placing tolerances to be violated.

E. Proposed supports for each type of reinforcing.

F. Certification that all installers of dowel adhesives are certified as Adhesive Anchor Installers in accordance with the ACI-CRSI Anchor Installer Certification Program.

G. International Code Council-Evaluation Services Evaluation Services Report (ICC-ES ESR) for dowel adhesives.

H. Adhesive dowel testing plan.

1.05 QUALITY ASSURANCE

A. Installer Qualifications for Drilled-In Rebar: Drilled-in rebar shall be installed by an Installer with at least three years of experience performing similar installations. Installer

shall be certified as an Adhesive Anchor Installer in accordance with ACI-CRSI Adhesive Anchor Installation Certification Program.

B. Installer Training: Conduct a thorough training with the manufacturer or the manufacturer's representative for the Installer on the project. Training shall consist of a review of the complete installation process for drilled-in anchors, to include but not be limited to the following:

1. Hole drilling procedure.

2. Hole preparation and cleaning technique.

3. Adhesive injection technique and dispenser training/maintenance.

4. Rebar doweling preparation and installation.

5. Proof loading/torquing.

C. Inspections of the adhesive dowel system may be made by the Engineer or other representatives of the City in accordance with the requirements of the ESR published by the manufacturer. Provide adequate time and access for inspection of products and anchor holes prior to injection, installation, and proof testing.

PART 2 – PRODUCTS

2.01 REINFORCEMENT

A. All reinforcing steel for all reinforced concrete construction shall conform to the following requirements:

1. Bar reinforcement shall conform to the requirements of ASTM A 615 for Grade 60 Billet Steel Reinforcement, and shall be manufactured in the United States. All reinforcing steel shall have the manufacturer's mill marking rolled into the bar which shall indicate the producer, size, type and grade. All reinforcing bars shall be deformed bars. Smooth reinforcing bars shall not be used unless specifically called for on the Drawings.

2. Welded wire fabric reinforcement shall conform to the requirements of ASTM A 1064 and the details shown on the Drawings; provided, that welded wire fabric with longitudinal wire of W9.5 size wire shall be either furnished in flat sheets or in rolls with a core diameter of not less than 10 inches; and provided further, that welded wire fabric with longitudinal wires larger than W9.5 size shall be furnished in flat sheets only. All welded wire fabric reinforcement shall be galvanized.

B. Field welding of reinforcing steel will not be allowed.

C. Use of coiled reinforcing steel will not be allowed.

2.02 ACCESSORY MATERIALS

A. Bolsters, chairs, spacers and other devices for supporting and fastening reinforcing in place shall be plastic protected wire bars supports complying with CRSI recommendations conforming to Class 1 bar supports.

B. Metal bar supports for reinforcing steel for wastewater structures shall be Class 2, Type B stainless steel protected bar supports (CRSI).

C. Tie Wire: Galvanized 16-gauge annealed type.

D. Concrete blocks (dobies), used to support and position reinforcing steel, shall have the same or higher compressive strength as specified for the concrete in which it is located. Concrete blocks shall only be used bottom mat of reinforcing steel for slabs on grade.

2.03 MECHANICAL COUPLERS

A. Mechanical couplers shall develop a tensile strength which exceeds 100 percent of the ultimate tensile strength and 125 percent of the yield strength of the reinforcing bars being spliced. The reinforcing steel and coupler used shall be compatible for obtaining the required strength of the connection.

B. Where the type of coupler used is composed of more than one component, all components required for a complete splice shall be supplied.

C. Hot forged sleeve type couplers shall not be used. Acceptable mechanical couplers are Dayton Superior Dowel Bar Splicer System by Dayton Superior, Dayton, Ohio, or approved equal. Mechanical couplers shall only be used where shown on the Drawings or where specifically approved by the Engineer.

D. Where the threaded rebar to be inserted into the coupler reduces the diameter of the bar, the threaded rebar piece shall be provided by the coupler manufacturer.

2.04 DOWEL ADHESIVE SYSTEM

A. Where shown on the Drawings, reinforcing bars anchored into hardened concrete with a dowel adhesive system shall use a two-component adhesive mix which shall be injected with a static mixing nozzle following manufacturer's instructions.

B. All holes shall be drilled with a carbide bit unless otherwise recommended by the manufacturer. If coring holes is allowed by the manufacturer and approved by the Engineer, cored holes shall be roughened in accordance with manufacturer requirements.

C. Thoroughly clean drill holes of all debris, drill dust, and water in accordance with manufacturer’s instructions with compressed air and a wire brush prior to installation of adhesive and reinforcing bar.

D. Degree of hole dampness shall be in strict accordance with manufacturer recommendations. Installation conditions shall be either dry or water-saturated. Water filled or submerged holes shall not be permitted unless specifically approved by the Engineer.

E. Injection of adhesive into the hole shall be performed in a manner to minimize the formation of air pockets in accordance with the manufacturer's instructions.

F. Embedment Depth:

1. The embedment depth of the bar shall be as show on the Drawings. Although all manufacturers listed below are permitted, the embedment depth shown on the Drawings is based on "SET-XP" by Simpson Strong-Tie Co. If the Contractor submits one of the other named dowel adhesives from the list below, the Engineer shall evaluate the required embedment and the Contractor shall provide the required embedment depth stipulated by the Engineer specific to the approved dowel adhesive.

2. Where the embedment depth is not shown on the Drawings, the embedment depth shall be determined to provide the minimum allowable bond strength equal to the tensile strength of the rebar according to the manufacturer's ICC-ES ESR.

3. The embedment depth shall be determined using the actual concrete compressive strength, a cracked concrete state, maximum long-term temperature of 110 degrees F, and maximum short-term temperature of 140 degrees F. In no case shall the embedment depth be less than the minimum, or more than the maximum, embedment depths stated in the manufacturer's ICC-ES ESR.

G. Engineer's approval is required for use of this system in locations other than those shown on the Drawings.

H. The adhesive system shall be IBC compliant for use in both cracked and uncracked concrete, must comply with the latest revision of ICC-ES Acceptance Criteria AC308, and shall have a valid ICC-ES report. The adhesive system shall be "Epcon System C6+ Adhesive Anchoring System" as manufactured by ITW Redhead, " HIT-HY 200 Injection Adhesive Anchor System" as manufactured by Hilti, Inc. "SET-XP" as manufactured by Simpson Strong-Tie Co. or "Pure 110+ Epoxy Adhesive Anchor System" by Powers Fasteners. Fast-set epoxy formulations shall not be acceptable.

I. All individuals installing dowel adhesive system shall be certified as an Adhesive Anchor Installer in accordance with the ACI-CRSI Anchor Installation Certification Program.

2.05 FABRICATION

A. Reinforcing steel shall be accurately formed to the dimensions and shapes shown on the Drawings, and the fabricating details shall be prepared in accordance with ACI 315 and ACII 318, except as modified by the Drawings. Stirrups and tie bars shall be bent around a pin having a diameter not less than 1 1/2 inch for No. 3 bars, 2 inch for No. 4 bars, and 2 1/2 inch for No. 5 bars. Bends for other bars shall be made around a pin having a diameter not less than 6 times the minimum thickness, except for bars larger than 1 inch, in which case the bends shall be made around a pin of 8 bar diameters. Bars shall be bent cold.

B. The Contractor shall fabricate reinforcing bars for structures in accordance with bending diagrams, placing lists, and placing Drawings. Said Drawings, diagrams, and lists shall be prepared by the Contractor as specified under Section entitled "Submittals," herein.

C. Fabricating Tolerances: Bars used for concrete reinforcing shall meet the following requirements for fabricating tolerances:

1. Sheared length: + 1 inch

2. Depth of truss bars: + 0, 1/2 inch

3. Stirrups and ties: + 1/2 inch

4. All other bends: + 1 inch

2.06 MINIMUM REINFORCEMENT

A. Unless otherwise shown on the Drawings or in the absence of the steel being shown, the minimum cross-sectional area of reinforcing steel in the direction of principal reinforcement shall be 0.0033 times the gross concrete area of all concrete members.

B. Unless otherwise shown on the Drawings or in the absence of the steel being shown, the minimum cross-sectional area of temperature reinforcing steel (reinforcing steel perpendicular to the principal reinforcing steel) shall be as follows:

1. 0.0020 times the gross concrete area in slabs of non-water-bearing structures.

2. 0.0015 times the gross concrete area vertically in walls of non-water-bearing structures.

3. 0.0025 times the gross concrete area horizontally in walls of non-water-bearing structures.

4. 0.0050 times the gross concrete area in slabs of water-bearing structures

5. 0.0030 times the gross concrete area vertically in walls of water-bearing structures.

6. 0.0050 times the gross concrete area horizontally in walls of water-bearing structures.

7. Temperature steel shall not be spaced further apart than five times the slab or wall thickness, nor more than 18 inches.

PART 3 – EXECUTION

3.01 DELIVERY, STORAGE AND HANDLING

A. All reinforcing shall be neatly bundled and tagged for placement when delivered to the job site. Bundles shall be properly identified for coordination with mill test reports.

B. Reinforcing steel shall be stored above ground on platforms or other supports and shall be protected from the weather at all times by suitable covering. It shall be stored in an orderly manner and plainly marked to facilitate identification.

C. Reinforcing steel shall at all times be protected from conditions conducive to corrosion until concrete is placed around it.

D. The surfaces of all reinforcing steel and other metalwork to be in contact with concrete shall be thoroughly cleaned of all dirt, grease, loose scale and rust, grout, mortar and other foreign substances immediately before the concrete is placed. Where there is delay in depositing concrete, reinforcing shall be reinspected and if necessary recleaned.

3.02 PLACEMENT

A. Reinforcing steel shall be accurately positioned as shown on the Drawings, and shall be supported and wired together to prevent displacement, using annealed iron wire ties or suitable clips at intersections. All reinforcing steel shall be supported by concrete, plastic or metal supports, spacers or metal hangers which are strong and rigid enough to prevent any displacement of the reinforcing steel. Where concrete is to be placed on the ground, supporting concrete blocks (or dobies) shall be used, in sufficient numbers to support the bars without settlement, but in no case shall such support be continuous. All concrete blocks used to support reinforcing steel shall be tied to the steel with wire ties which are embedded in the blocks. For concrete over formwork, the Contractor shall furnish concrete, metal, plastic, or other acceptable bar chairs and spacers.

B. The portions of all accessories in contact with the formwork shall be made of plastic or steel coated with a 1/8-inch minimum thickness of plastic which extends at least 1/2 inch from the concrete surface. Plastic shall be gray in color.

C. Tie wires shall be bent away from the forms in order to provide the specified concrete coverage.

D. Bars additional to those shown on the Drawings which may be found necessary or desirable by the Contractor for the purpose of securing reinforcement in position shall be provided by the Contractor at its own expense.

E. Unless otherwise specified, reinforcement placing tolerances shall be within the limits specified in Section 7.5 of ACI 318 except where in conflict with the requirements of the Building Code.

F. Bars may be moved as necessary to avoid interference with other reinforcing steel, conduits, or embedded items. If bars are moved more than one bar diameter, or enough to exceed the above tolerances, the resulting arrangement of bars shall be as acceptable to the Engineer.

G. Welded wire fabric reinforcement placed over horizontal forms shall be supported on slab bolsters having gray, plastic coated standard type legs as specified in Paragraph B herein. Slab bolsters shall be spaced not less than 30 inches on centers, shall extend continuously across the entire width of the reinforcing mat, and shall support the reinforcing mat in the plane shown on the Drawings.

H. Welded wire fabric placed over the ground shall be supported on wired concrete blocks (dobies) spaced not more than 3 feet on centers in any direction. The construction practice of placing welded wire fabric on the ground and hooking into place in the freshly placed concrete shall not be used.

I. The clear distance between parallel bars (except in columns and between multiple layers of bars in beams) shall be not less than the nominal diameter of the bars nor less than 1 1/3 times the maximum size of the coarse aggregate, nor less than one inch.

J. Where reinforcement in beams or girders is placed in 2 or more layers, the clear distance between layers shall be not less than one inch.

K. In columns, the clear distance between longitudinal bars shall be not less than 1 1/2 times the bar diameter, nor less than 1 1/2 times the maximum size of the coarse aggregate, nor less than 1 1/2 inches.

L. The clear distance between bars shall also apply to the distance between a contact splice and adjacent splices or bars.

M. Reinforcing bar splices shall only be used at locations shown on the Drawings. When it is necessary to splice reinforcement at points other than where shown, the character of the splice shall be as acceptable to the Engineer.

N. The length of lap for reinforcing bars, unless otherwise shown on the Drawings shall be in accordance with ACI 318, Section 12.15.1 for a class B splice.

O. Laps of welded wire fabric shall be in accordance with the ACI 318. Adjoining sheets shall be securely tied together with No. 14 tie wire, one tie for each 2 running feet. Wires shall be staggered and tied in such a manner that they cannot slip.

P. Couplers which are located at a joint face shall be a type which can be set either flush or recessed from the face as shown on the Drawings. The couplers shall be sealed during concrete placement to completely eliminate concrete or cement paste from entering. After the concrete is placed, couplers intended for future connections shall be plugged and sealed to prevent any contact with water or other corrosive materials. Threaded couplers shall be plugged with plastic plugs which have an O-ring seal.

Q. Reinforcing shall not be straightened or rebent in a manner which will injure the material. Bars with kinks or bends not shown on the Drawings shall not be used. All bars shall be bent cold, unless otherwise permitted by the Engineer. No bars partially embedded in concrete shall be field bent except as shown on the Drawings or specifically permitted by the Engineer.

R. Dowel Adhesive System shall be installed in strict conformance with the manufacturer's recommendations and as required in Article 2.04 above. A representative of the manufacturer must be on site prior to adhesive dowel installation to provide instruction on proper installation procedures for all adhesive dowel installers. Testing of adhesive dowels shall be as indicated below. If the dowels have a hook at the end to be embedded in subsequent work, an approved mechanical coupler shall be provided at a convenient distance from the face of existing concrete to facilitate adhesive dowel testing while maintaining required hook embedment in subsequent work.

S. Adhesive Dowel Testing

1. At all locations where adhesive dowels are shown on the Drawings, at least 5 percent of all adhesive dowels installed shall be tested to the value indicated on the Drawings, with a minimum of one tested dowel per group. If no test value is

indicated on the Drawings but the installed dowel is under direct tension, the Contractor shall notify the Engineer to verify the required test value.

2. Contractor shall submit a plan and schedule indicating locations of dowels to be tested, load test values and proposed dowel testing procedure (including a diagram of the testing equipment proposed for use) prior to conducting any testing. The testing equipment shall have a minimum of three support points and shall be of sufficient size to locate the edge of supports no closer than two times the anchor embedment depth from the center of the anchor.

3. Where Contract Documents indicate adhesive dowel design is the Contractor's responsibility, the Contractor shall submit a plan and schedule indicating locations of dowels to be tested and load test values, sealed by a Professional Engineer currently registered in the State of Florida. The Contractor shall also submit documentation indicating the Contractor's testing procedures have been reviewed and the proposed procedures are acceptable.

4. Adhesive Dowel shall have no visible indications of displacement or damage during or after the proof test. Concrete cracking in the vicinity of the dowel after loading shall be considered a failure. Dowels exhibiting damage shall be removed and replaced. If more than 5 percent of tested dowels fail, then 100 percent of dowels shall be proof tested.

5. Proof testing of adhesive dowels shall be performed by an independent testing laboratory hired directly by the Contractor. The Contractor shall be responsible for costs of all testing, including additional testing required due to previously failed tests.

3.03 CLEANING AND PROTECTION

A. Reinforcing steel shall at all times be protected from conditions conducive to corrosion until concrete is placed around it.

B. The surfaces of all reinforcing steel and other metalwork to be in contact with concrete shall be thoroughly cleaned of all dirt, grease, loose scale and rust, grout, mortar and other foreign substances immediately before the concrete is placed. Where there is delay in depositing concrete, reinforcing shall be reinspected and, if necessary recleaned.

- END OF SECTION -

SECTION 03300

CAST-IN-PLACE CONCRETE

PART 1 – GENERAL

1.01 THE REQUIREMENT

A. The Contractor shall furnish all materials for concrete in accordance with the provisions of this Section and shall form, mix, place, cure, repair, finish, and do all other work as required to produce finished concrete, all in accordance with the requirements of the Contract Documents.

B. The requirements in this section shall apply to the following types of concrete:

1. Class A1 Concrete: Normal weight concrete used at all non-water-bearing structures, unless otherwise noted.

2. Class A2 Concrete: Normal weight concrete used at all water-bearing structures and containment structures, unless otherwise noted.

3. Class A3 Concrete: Normal weight concrete used at all walls of water bearing structures. Class A3 concrete is similar to Class A2 except Class A3 shall contain a mandatory addition of high range water reducer to aid in placement of concrete.

4. Class B Concrete: Normal weight concrete with pea-rock aggregate. Class B concrete shall be used only at locations indicated on the Drawings.

5. Class C Concrete: Normal weight concrete used in electrical/instrumentation ductbanks, pipe encasements and sidewalks.

6. Flowable Fill: Lean concrete proportioned without the use of coarse aggregate primarily for use as pipe backfill. Flowable fill shall be utilized only at locations indicated on the Drawings.

7. Tremie Concrete: Concrete indicated to be placed underwater.

8. Grout is specified in Section 03315 entitled "Grout".

1.02 RELATED WORK SPECIFIED ELSEWHERE

A. Section 01300 - Submittals

B. Section 01400 - Quality Control

C. Section 03100 - Concrete Formwork

D. Section 03200 - Concrete Reinforcement

E. Section 03400 - Precast Concrete, General

F. Section 03315 - Grout

G. Section 05500 - Metal Fabrications

H. Section 07190 - Vapor Barrier

1.03 REFERENCE SPECIFICATIONS, CODES, AND STANDARDS

A. Without limiting the generality of other requirements of these Specifications, all work specified herein shall conform to or exceed the requirements of the Florida Building Code (FBC) and the applicable requirements of the following documents to the extent that the provisions of such documents are not in conflict with the requirements of this Section.

B. Codes and Standards

1. The Building Code, as referenced herein, shall be the Florida Building Code.

C. Federal Specifications

1. UU B 790A (Int.Amd. 1) Building Paper, Vegetable Fiber (Kraft, Waterproofed, Water Repellant and Fire Resistant).

D. Commercial Standards

1. ACI 214 Recommended Practice for Evaluation of Strength Test Results of Concrete.

2. ACI 301 Specifications for Structural Concrete for Buildings.

3. ACI 305 Hot Weather Concreting.

4. ACI 306 Cold Weather Concreting.

5. ACI 309 Recommended Practice for Consolidation of Concrete

6. ACI 315 Details and Detailing of Concrete Reinforcement.

7. ACI 318 Building Code Requirements for Reinforced Concrete.

8. ACI 347 Recommended Practice for Concrete Formwork.

9. ACI 350 Environmental Engineering Concrete Structures.

10. ASTM C 31 Methods of Making and Curing Concrete Test Specimens in the Field.

11. ASTM C 33 Specification for Concrete Aggregates.

12. ASTM C 39 Test Method for Compressive Strength of Cylindrical Concrete Specimens.

13. ASTM C 88 Test Method for Soundness of Aggregates by use of Sodium Sulfate or Magnesium Sulfate.

14. ASTM C 94 Specification for Ready-Mixed Concrete.
15. ASTM C 114 Method for Chemical Analysis of Hydraulic Cement.
16. ASTM C 136 Method for Sieve Analysis of Fine and Coarse Aggregate.
17. ASTM C 143 Test Method for Slump of Portland Cement Concrete.
18. ASTM C 150 Specification for Portland Cement.
19. ASTM C 156 Test Method for Water Retention by concrete Curing Materials.
20. ASTM C 157 Test Method for length Change of Hardened Cement Mortar and Concrete.
21. ASTM C 192 Method of Making and Curing concrete Test Specimens in the Laboratory.
22. ASTM C 227 Standard Test Method for Potential Alkali Reactivity of Cement Aggregate Combinations (Mortar-Bar Method).
23. ASTM C 260 Specification for Air-Entraining Admixtures for Concrete.
24. ASTM C 289 Standard Test Method for Potential Reactivity of Aggregates (Chemical Method).
25. ASTM C 494 Specification for Chemical Admixtures For Concrete.
26. ASTM C 586 Standard Test Method for Potential Alkali Reactivity of Carbonate Rocks for Concrete Aggregates (Rock Cylinder Method).
27. ASTM C 618 Standard Specification for Fly Ash and Raw or Calcined Natural Pozzolan for use as a Mineral Admixture in Portland Cement Concrete.
28. ASTM D 1751 Specification for preformed Expansion Joint Fillers for Concrete Paving and Structural Construction (Non-extruding and Resilient Bituminous Types).
29. ASTM D 6103 Standard Test Method for Flow Consistency of Controlled Low Strength Material
30. ASTM E11 Specification for Wire-Cloth Sieves for Testing Purposes.
31. ASTM E 119 Method for Fire Tests of Building Construction and Materials.

1.04 SUBMITTALS

A. The design mixes to be used shall be prepared by qualified persons and submitted for review. The design of the mix is the responsibility of the Contractor subject to the limitations of the specifications. Review processing of this submission will be required only as evidence the mix has been designed by qualified persons and that the minimum requirements of the specifications have been met. Such review will in no way alter the

responsibility of the Contractor to furnish concrete meeting the requirements of the specifications. If in the progress of the work the sources of materials change in characteristics or the Contractor requests a new source in writing, the Contractor shall, at his expense submit new test data and information for the establishment of a new design mix. Submit mix designs for all classes of concrete to be used under this Contract. Mix design submittals shall include the following:

1. Sources of all materials and certifications of compliance with specifications for all sources of each material.

2. Certified current (less than one year old) chemical analysis of Portland Cement or Blended Cement to be used.

3. Certified current (less than one year old) chemical analysis of fly ash to be used.

4. Aggregate test results showing compliance with required standards, i.e. sieve analysis, aggregate soundness tests, etc.

5. Manufacturer's data on all admixtures stating compliance with required standards and are compatible with one another. Written conformance to the above mentioned requirements and the chloride ion content of the admixture will be required from the admixture manufacturer prior to Mix design review by the Engineer.

6. Field experience records and/or trial mix data for the proposed concrete mixes.

B. Where ready-mix concrete is used, the Contractor shall provide delivery tickets at the time of delivery of each load of concrete. In addition to the information required by ASTM C94, each ticket shall show the mix number, cement content, water/cementitious ratio, and amount of water allowed to be added to truck without exceeding required water/cementitious ratio.

C. A schedule of all concrete placement with volume of concrete planned to be placed each day.

D. A layout of all structures with all planned construction joint locations.

1.05 QUALITY ASSURANCE

A. Plant equipment and facilities shall meet all requirements of the Check List for Certification of Ready Mixed Concrete Production facilities of the National Ready Mixed Concrete Association and ASTM C 94.

B. Tests for compressive strength and slump of concrete will be performed as specified herein. Test for determining slump will be in accordance with the requirements of ASTM C 143.

C. The cost of initial trial mixes and initial laboratory tests to design the mixes including compression tests, sieve analysis, and tests on trial mixes shall be included in the Contract Price.

D. The cost of all tests during construction will be borne by the City. However, the Contractor shall be charged for the cost of any additional tests and investigation on work

performed which does not meet the Specifications. All test results shall be sent directly to the Engineer. All testing invoices shall be sent directly to the City. The Contractor shall be responsible for coordination of all tests with the testing laboratory.

E. Concrete for testing shall be supplied by the Contractor at no cost to the City City1, and the Contractor shall provide assistance to the Engineer in obtaining samples. The Contractor shall dispose of and clean up all excess material.

F. Construction Tolerances

G. The Contractor shall set and maintain concrete forms and perform finishing operations so as to ensure that the completed work is within the tolerances specified herein. Surface defects and irregularities are defined as finishes and are to be distinguished from tolerances. Tolerance is the specified permissible variation from lines, grades, or dimensions shown. Where tolerances are not stated in the Specifications, permissible deviations will be in accordance with ACI 347 and Section 03100 entitled "Concrete Formwork".

1.06 QUALITY CONTROL

A. Compressive Strength

1. Compression test specimens shall be taken during construction from the first placement of each class of concrete specified herein and at intervals thereafter as selected by the Engineer to insure continued compliance with these Specifications. At least one set of test specimens shall be made for each placement in excess of five cubic yards, or for each fifty (50) cubic yards of concrete placed, or for each 5000 square feet of surface area for slabs or walls, whichever is greater.

2. Samples of freshly mixed concrete shall be obtained in accordance with ASTM C 172, and compression test specimens for concrete shall be made in accordance with ASTM C 31. Specimens shall consist of at least five 6-inch diameter by 12-inch high cylinders, or eight 4-inch diameter by 8-inch high cylinders. Each cylinder shall be identified by a tag attached to the side of the cylinder.

3. The Contractor shall provide approved curing boxes for storage of cylinders on site. The insulated curing box shall be of sufficient size and strength to contain all the specimens made in any four consecutive working days and to protect the specimens from falling over, being jarred or otherwise disturbed during the period of initial curing. The box shall be erected, furnished and maintained by the Contractor. Such box shall be equipped to provide the moisture and to regulate the temperature necessary to maintain the proper curing conditions required by ASTM C31. Such box shall be located in an area free from vibration such as pile driving and traffic of all kinds. No concrete requiring inspection shall be delivered to the site until such storage curing box has been provided. Specimens shall remain undisturbed in the curing box until ready for delivery to the testing laboratory but not less than sixteen hours

4. Compression test shall be performed in accordance with ASTM C 39. For 6x12 cylinders, two test cylinders will be tested at 7 days and 2 at 28 days. For 4x8 cylinders, three test cylinders will be tested at 7 days and three at 28 days. The remaining cylinders will be held to verify test results, if needed.

B. Consistency

1. Consistency of the concrete will be checked by the Engineer by standard slump cone tests. The Contractor shall make any necessary adjustments in the mix as the Engineer may direct and shall upon written order suspend all placing operations in the event the consistency does not meet the intent of the specifications. No payment shall be made for delays, material or labor costs due to such eventualities.

2. Slump tests shall be made in accordance with ASTM C 143. Slump tests shall be performed as deemed necessary by the Engineer and each time compressive strength samples are taken.

C. Air Content

1. Samples of freshly mixed concrete will be tested for entrained air content by the Engineer in accordance with ASTM C 231.

2. Air content tests will be performed as deemed necessary by the Engineer and each time compressive strength samples are taken.

D. Evaluation and Acceptance of Concrete

1. Evaluation and acceptance of the compressive strength of concrete shall be according to the requirements of ACI 215 and ACI 318, Chapter 5 "Concrete Quality Mixing and Placing", and as specified herein.

2. If any concrete fails to meet these requirements, immediate corrective action shall be taken to increase the compressive strength for all subsequent batches of the type of concrete affected.

3. All concrete which fails to meet the ACI requirements and these specifications, is subject to removal and replacement at the cost of the Contractor. Additional testing may also be required to verify compressive strength of concrete. Additional testing shall involve extraction and testing of concrete cores in accordance with ASTM C 42. Engineer shall determine locations where concrete cores shall be taken. Nondestructive test methods shall not be used to verify strength of in-place concrete.

1.07 PRE-CONCRETE CONFERENCE

A. At least 35 days prior to start of the Concrete construction schedule, the Contractor shall conduct a meeting to review the proposed mix designs and to discuss the required methods and procedures to achieve the required concrete construction. The Contractor shall send a pre-concrete conference agenda to all attendees 20 days prior to the scheduled date of the conference.

B. The Contractor shall require responsible representatives of every party who is concerned with the concrete work to attend the conference, including but not limited to the following:

1. Contractor’s superintendent

2. For the concrete design mix – Laboratory retained for trial batching and tests

3. For field quality control – Concrete subcontractor, Concrete producer, Admixture Manufacturer(s), Concrete pumping Contractor

C. Minutes of the meeting shall be recorded, typed and printed by the Contractor and distributed by him to all parties concerned within five days of the meeting. One copy of the minutes shall also be transmitted to the Engineer.

D. The minutes shall include a statement by the admixture manufacturer(s) indicating that the proposed mix design and placing techniques can produce the concrete quality required by these Specifications.

E. The Engineer will be present at the conference. The Contractor shall notify the Engineer at least 20 days prior to the scheduled date of the conference.

PART 2 – MATERIALS

2.01 CONCRETE MATERIALS

A. Materials shall be delivered, stored, and handled so as to prevent damage by water or breakage. Only one brand of cement shall be used. Cement reclaimed from cleaning bags or leaking containers shall not be used. All cement shall be used in the sequence of receipt of shipments.

B. All materials furnished and stored for the work shall comply with the requirements of ACI 301, as applicable.

C. Materials for concrete shall conform to the following requirements:

1. Cement shall be standard brand Portland cement conforming to ASTM C 150 for Type II. Portland cement shall contain no more than 0.60 percent alkalies. The term "alkalies" referred to herein is defined as the sum of the percentage of sodium oxide and 0.658 times the percentage of potassium oxide (Na20 + 0.658 K20). These oxides shall be determined in accordance with ASTM C 114. A single brand of cement shall be used throughout the Work, and prior to its use, the brand shall be acceptable to the Engineer. The cement shall be suitably protected from exposure to moisture until used. Cement that has become lumpy shall not be used. Sacked cement shall be stored in such a manner so as to permit access for inspection and sampling. Certified mill test reports for each shipment of cement to be used shall be submitted to the Engineer if requested regarding compliance with these Specifications.

2. Fly ash shall meet the requirements of ASTM C 618 for Class F, except the loss on ignition shall not exceed 4%. The fly ash constituent shall be maximum 15% of the total weight of the combined Portland cement and fly ash. For concrete to be used in environmental concrete structures, i.e. process structures or fluid containing structures, inclusion of fly ash in concrete mix is mandatory.

3. Water shall be potable, clean, and free from objectionable quantities of silty organic matter, alkali, salts and other impurities. The water shall be considered potable, for

the purposes of this Section only, if it meets the requirements of the local governmental agencies.

4. Aggregates shall be obtained from pits acceptable to the Engineer, shall be non-reactive, and shall conform to the FBC and ASTM C 33. Maximum size of coarse aggregate shall be as specified in Article 2.04, Paragraph B of this Section. Lightweight sand for fine aggregate will not be permitted.

   a. Coarse aggregates shall consist of clean, hard, durable gravel, crushed gravel, crushed rock or a combination thereof. The coarse aggregates shall be prepared and handled in two or more size groups for combined aggregates with a maximum size not greater than 1 inch. When the aggregates are proportioned for each batch of concrete the two size groups shall be combined.

   b. Fine aggregates shall be manufactured sand that is hard and durable.

   c. Combined aggregates shall be well graded from coarse to fine sizes, and shall be uniformly graded between screen sizes to produce a concrete that has optimum workability and consolidation characteristics. Where a trial batch is required for a mix design, the final combined aggregate gradations will be established during the trial batch process.

   d. When tested in accordance with "Potential Reactivity of Aggregates (Chemical Method)" (ASTM C 289), the ratio of silica released to reduction in alkalinity shall not exceed 1.0.

   e. When tested in accordance with "Organic Impurities in Sands for Concrete" (ASTM C 40), the fine aggregate shall produce a color in the supernatant liquid no darker than the reference standard color solution.

   f. When tested in accordance with "Resistance to Abrasion of Small size Coarse Aggregate by Use of the Los Angeles Machine" (ASTM C 131), the coarse aggregate shall show a loss not exceeding 42 percent after 500 revolutions, or 10.5 percent after 100 revolutions.

   g. When tested in accordance with "Soundness of Aggregates by Use of Sodium Sulfate or Magnesium Sulfate" (ASTM C 88), the loss resulting after five cycles shall not exceed 10 percent for fine or coarse aggregate when using sodium sulfate.

2.02 ADMIXTURES

A. Air-entraining agent meeting the requirements of ASTM C 260, shall be used. Sufficient air-entraining agent shall be used to provide a total air content of 3 to 5 percent. Air-entraining agent shall be Sika AER by Sika Corp., MB-VR by Master Builders, Darex AEA by Grace, AEA-92S by Euclid Chemical Company, or equal.

B. Admixtures shall be required at the Engineer's discretion or, if not required, may be added at the Contractor's option to control the set, effect water reduction, and increase workability. In either case, the addition of an admixture shall be at the Contractor's expense. The use of an admixture shall be subject to acceptance by the Engineer. Concrete containing an admixture shall be first placed at a location determined by the

Engineer. If the use of an admixture is producing an inferior end result, the Contractor shall discontinue use of the admixture. Admixtures specified herein shall conform to the requirements of ASTM C 494. The required quantity of cement shall be used in the mix regardless of whether or not an admixture is used. Admixtures shall contain no free chloride ions, be nontoxic after 30 days, and shall be compatible with and made by the same manufacturer as the air entraining admixture.

1. Water reducing admixture shall conform to ASTM C 494, Type A and shall contain no more than 0.05% chloride ions. Acceptable products are “Eucon Series” by the Euclid Chemical Company, “Pozzolith Series” by BASF, and “Plastocrete Series” by Sika Corporation.

2. High range water reducer shall be sulfonated polymer conforming to ASTM C 494, Type F or G. The use of high range water reducer is mandatory for Class A2 A3 1 concrete. The high range water reducer shall be accurately measured and pressure injected into the mixer as a single dose by an experienced technician. A standby system shall be provided and tested prior to each day’s operation of the job site system. Concrete shall be mixed at mixing speed for a minimum of 100 mixer revolutions after the addition of the high range water reducer. Acceptable products are “Eucon 37” or Plastol 5000 by the Euclid Chemical Company, “Rheobuild 1000 or Glenium Series” by BASF, and “Daracem 100 or Advaflow Series” by W.R. Grace.

3. A non-chloride, non-corrosive accelerating admixture shall be used when air temperature at time of placement is expected to be consistently below 40 degrees Fahrenheit as specifically approved by the Engineer. The admixture shall conform to ASTM C 494, Type C or E, and shall not contain more chloride ions than are present in municipal drinking water. The admixture manufacturer must have long-term non-corrosive test data from an independent testing laboratory (of at least a year’s duration) using an acceptable accelerated corrosion test method such as that using electrical potential measures. Acceptable products are “Accelguard 80/90 or NCA” by the Euclid Chemical Company and “Daraset” by W.R. Grace.

4. A water reducing retarding admixture shall be used when air temperature at time of placement is expected to be consistently above 90 degrees Fahrenheit as specifically approved by the Engineer. The admixture shall conform to ASTM, Type D and shall not contain more than 0.05% chloride ions. Acceptable products are “Eucon NR or Eucon Retarder 100” by the Euclid Chemical Company, “Pozzolith Retarder” by BASF, and “Plastiment” by Sika Corporation.

5. The Contractor shall submit certification from each admixture manufacturer that all admixtures utilized in the design mix are compatible with one another and properly proportioned.

6. Prohibited Admixtures: Calcium chloride, thiocyanate or admixtures containing more than 0.05 percent chloride ions are not permitted.

7. Certification: Written conformance to the above mentioned requirements and the chloride ion content of the admixture will be required from the admixture manufacturer prior to Mix design review by the Engineer.

2.03 ACCESSORIES

A. Epoxy adhesives shall be the following products for the applications specified to be used in strict accordance with manufacturer's recommendations.

1. For bonding freshly mixed, plastic concrete to hardened concrete, Sikadur 32 Hi Mod, LPL Epoxy Adhesive, as manufactured by Sika Chemical Corporation; Concresive 1001 LPL, as manufactured by Adhesive Engineering Company; or equal.

2. For bonding hardened concrete or masonry to steel, Colma Dur Gel, Sikadur Hi Mod Gel, or equal.

2.04 CONCRETE MIX

A. Concrete shall be composed of cement, admixtures, aggregates and water. These materials shall be of the qualities specified. The exact proportions in which these materials are to be used for different parts of the work will be determined by the Contractor. In general, the mix shall be designed to produce a concrete capable of being deposited so as to obtain maximum density and minimum shrinkage and, where deposited in forms, to have good consolidation properties and maximum smoothness of surface. Mix designs with more than 41 percent of sand of the total weight of fine and coarse aggregate shall not be used for Class A Concrete. The aggregate gradations shall be formulated to provide fresh concrete that will not promote rock pockets around reinforcing steel or embedded items. The proportions shall be changed whenever necessary or desirable to meet the required results at no additional cost to the City. All changes shall be subject to review by the Engineer.

B. The proportions of cement, aggregates, admixtures and water used in the concrete shall be based on tests of grading and moisture content of materials, slump of concrete mixture, strength of concrete and the following factors:

1. Class A1 Concrete (Normal weight concrete used at all non-water bearing structures, unless noted otherwise).

Minimum cementitious materials content, per cubic yard	611 lbs.
Maximum water-cementitious materials ratio, by weight	0.45
Slump range	3 inches to 4 inches with water reducing admixture
Coarse Aggregate	#57 per ASTM C33
Compressive strength at 28 days – F’c	4,000 psi
Air Content	3% ± 1%

2. Class A2 Concrete (Normal weight concrete used at all water bearing structures and containment structures, unless noted otherwise).

Minimum cementitious materials content, per cubic yard	611 lbs.
Maximum water-cementitious materials ratio, by weight	0.42
Slump range	3 inches to 4 inches with water reducing admixture
Coarse Aggregate	#57 per ASTM C33
Compressive strength at 28 days – F'c	4,500 psi
Air Content	3% ± 1%

3. Class A3 Concrete (Normal weight concrete used at all walls of water bearing structures. Class A3 concrete is similar to Class A2 except class A3 shall contain a mandatory addition of high range water reducer).

Minimum cementitious materials content, per cubic yard	611 lbs.
Maximum water-cementitious materials ratio, by weight	0.42
Slump range	3 inches maximum before addition of high range water reducing admixture
	8 inches maximum after addition of high range water reducing admixture
Compressive strength at 28 days - F'c	4,500 psi
Coarse Aggregate	#57 per ASTM C33
Air Content	3% ± 1%

4. Class B Concrete (At locations shown on the Drawings).

Minimum cementitious materials content, per cubic yard	517 lbs.
Maximum water-cementitious materials ratio, by weight	0.50
Slump, maximum	5 inches
Compressive strength at 28 days - F'c	4,000 psi
Coarse Aggregate	Pearock

Air Content	3% ± 1%

5. Class C Concrete (Sidewalks, pipe encasements in the dry, thrust blocks and electrical duct banks)

Minimum cementitious materials content, per cubic yard	500 lbs.
Maximum water-cementitious materials ratio, by weight	0.60
Slump, maximum	5 inches
Compressive strength at 28 days - F'c	3,000 psi
Coarse Aggregate	#57 per ASTM C33
Air Content	3% ± 1%

6. Flowable Fill (In lieu of pipe bedding, select backfill)

Minimum cementitious materials content, per cubic yard	100 lbs.
Maximum water-cementitious materials ratio, by weight	5.0
Flowability, minimum	8 inches
Compressive strength at 28 days - F'c	50-150 psi
Coarse aggregate	none
Fine aggregate	limestone screenings

7. Tremie Concrete (Concrete placed under water)

Minimum cement content, per cubic yard	700 lbs.
Maximum water-cementitious materials ratio, by weight	0.45
Slump, maximum	9 inches
Compressive strength lbs. per sq. inch at 28 days - F'c	4,500

C. All Class A1, A2 and A3 concrete, unless noted otherwise on the Drawings, shall be air entrained concrete. A water reducing admixture may be added to the mix at the Contractor's option.

D. The mix proportions used shall be changed subject to the limitation specified herein, whenever such change is necessary or desirable to secure the required strength, density, workability, and surface finish and the Contractor shall be entitled to no additional compensation because of such changes.

2.05 CONSISTENCY

A. The quantity of water entering into a batch of concrete shall be just sufficient, with a normal mixing period, to produce a concrete which can be worked properly into place without segregation, and which can be compacted by the vibratory methods herein specified to give the desired density, impermeability and smoothness of surface. The quantity of water shall be changed as necessary, with variations in the nature or moisture content of the aggregates, to maintain uniform production of a desired consistency. The consistency of the concrete in successive batches shall be determined by slump tests in accordance with ASTM C 143.

2.06 READY MIXED CONCRETE

A. Ready mixed concrete shall be used meeting the requirements as to materials, batching, mixing, transporting, and placing as specified herein and in accordance with ASTM C 94.

B. Ready mixed concrete shall be delivered to the site of the work, and discharge shall be completed within one and one half hour after the addition of the cement to the aggregates or before the drum has been revolved 250 revolutions, whichever is first. Upon delivery from the truck concrete temperature shall not exceed 90 degrees Fahrenheit.

C. Truck mixers shall be equipped with electrically actuated counters by which the number of revolutions of the drum or blades may be readily verified. The counter shall be of the resettable, recording type. The counters shall be actuated at the time of starting mixers at mixing speeds.

D. Each batch of concrete shall be mixed in a truck mixer for not less than 70 revolutions of the drum or blades at the rate of rotation designated by the manufacturer of equipment. Additional mixing, if any, shall be at the speed designated by the manufacturer of the equipment as agitating speed. All materials including mixing water shall be in the mixer drum before actuating the revolution counter for determining the number of revolution of mixing.

PART 3 – EXECUTION

3.01 PROPORTIONING AND MIXING

A. Proportioning of the concrete mix shall be based on the results of field experience or laboratory trial mixes in conformance with Section 5.3, “Proportioning on the Basis of Field Experience and/or Trial Mixtures” of ACI 318. When trial mixes are used they shall conform to the requirements of Chapter 3 "Proportioning" of ACI 301; provided, that the maximum slump for any concrete shall not exceed the limits specified in this Section of the Specifications.

B. When field experience records are inadequate to confirm the quality of a proposed concrete mix in accordance with Section 5.3, "Proportioning on the Basis of Field Experience and/or Trial Mixtures" of ACI 318, or when required by the Engineer, an independent testing laboratory designated by the Contractor and acceptable to the Engineer shall test a trial batch of each of the preliminary concrete mixes submitted by the Contractor. The trial batches shall be prepared using the aggregates, cement and admixtures proposed for the project. The trial batch materials shall be of a quantity such that the testing laboratory can obtain enough samples to satisfy requirements stated below. Tests on individual materials stated in PRODUCTS should already be performed before any trial mix is done. The cost of laboratory trial batch tests for each specified concrete mix will be borne by the Contractor and the Contractor shall furnish and deliver the materials to the testing laboratory at no cost to the City.

C. An independent testing laboratory shall observe the preparation of the trial batch, and they shall prepare a minimum of fifteen (15) standard test cylinders in accordance with ASTM C 31 in addition to conducting slump (ASTM C 143), air content (C 231) and unit weight (C 138) tests. Compressive strength test on the cylinders shall subsequently be performed by the same laboratory in accordance with ASTM C 39 as follows: Test 3 cylinders at age 7 days; test 3 cylinders at age 21 days; test 3 cylinders at age 28 days and test 3 cylinders at 56 days. The cylinders shall be carefully identified as "Trial Mix, Contract No._____, Product_____." If the average 28-day compressive strength of the trial mix is less than that specified, or if any single cylinder falls below the required strength by more than 500 psi, the mix shall be corrected, another trial batch prepared, test cylinders taken, and new tests performed as before. Any such additional trial batch testing required shall be performed at no additional cost to the City. Adjustments to the mix shall be considered refinements to the mix design and shall not be the basis for extra compensation to the Contractor.

D. Mixing of concrete shall conform to the requirements of Chapter 7 of ACI 301 Specifications.

E. Retempering of concrete or mortar which has partially hardened will not be permitted.

3.02 PREPARATION

A. Earth surfaces shall be thoroughly wetted by sprinkling, prior to the placing of any concrete, and these surfaces shall be kept moist by frequent sprinkling up to the time of placing concrete thereon. A vapor barrier specified in Section 07190 entitled "Vapor Barrier" shall be placed. The surface shall be free from standing water, mud, and debris at the time of placing concrete.

B. No concrete shall be placed until the reinforcement steel and formwork have been erected in a manner acceptable to the Engineer. The Contractor shall notify the Engineer not less than two working days prior to Concrete Placement, allowing one day for review and any corrective measures which are required.

C. Joints in Concrete

1. Concrete surfaces upon or against which concrete is to be placed shall be given a roughened surface for good bond and a bonding agent shall be placed. Contractor shall use an epoxy bonding agent for bonding fresh concrete to existing concrete where shown on the drawings.

2. After the surfaces have been prepared all horizontal construction joints shall be covered with a layer of mortar approximately one inch thick. The mortar shall have the same proportions of cement and sand as the regular concrete mixture. The water cement ratio of the mortar in place shall not exceed that of the concrete to be placed upon it, and the consistency of the mortar shall be suitable for placing and working in the manner hereinafter specified. The mortar shall be spread uniformly and shall be worked thoroughly into all irregularities of the surface. Wire brooms shall be used where possible to scrub the mortar into the surface. Concrete shall be placed immediately upon the fresh mortar.

D. Placing Interruptions

1. When placing of concrete is to be interrupted long enough for the concrete to take a set, the working face shall be given a shape by the use of forms or other means, that will secure proper union with subsequent work; provided that construction joints shall be made only where acceptable to the Engineer. Cold joints will be sufficient cause for rejection of the work.

E. Embedded Items

1. No concrete shall be placed until all formwork, installation of parts to be embedded, reinforcing steel, and preparation of surfaces involved in the placing have been completed and accepted by the Engineer at least four hours before placement of concrete. All surfaces of forms and embedded items that have become encrusted with dried grout from concrete previously placed shall be cleaned of all such grout before the surrounding or adjacent concrete is placed.

2. All inserts or other embedded items shall conform to the requirements herein.

F. All reinforcement, anchor bolts, sleeves, inserts, and similar items shall be set and secured in the forms where shown on the Drawings or by shop drawings and shall be acceptable to the Engineer before any concrete is placed. Accuracy of placement is the responsibility of the Contractor.

G. All anchor bolts called for on the drawings shall be cast in place in the concrete. Drilled, impact, adhesive or other types of anchors shall not be substituted for anchor bolts unless otherwise shown on the Drawings. Anchor bolts shall conform to the requirements set forth in Section 05050 entitled "Metal Fastening".

H. Casting New Concrete Against Old

1. Where concrete is to be cast against old concrete (any concrete which is greater than 60 days of age), the surface of the old concrete shall be thoroughly cleaned and roughened by sand blasting (exposing aggregate) prior to the application of an epoxy bonding agent.

I. No concrete shall be placed in any structure until all water entering the space to be filled with concrete has been properly cut off or has been diverted by pipes, or other means, and carried out of the forms, clear of the work. No concrete shall be deposited underwater, except where shown on the Drawings to be placed by the tremie method, nor shall the Contractor allow still water to rise on any concrete until the concrete has attained its initial set. Water shall not be permitted to flow over the surface of any

concrete in such manner and at such velocity as will injure the surface finish of the concrete. Pumping or other necessary dewatering operations for removing ground water, if required, will be subject to the review of the Engineer.

J. Corrosion Protection

1. Pipe, conduit, dowels, and other ferrous items required to be embedded in concrete construction shall be so positioned and supported prior to placement of concrete that there will be a minimum of 2 inches clearance between said items and any part of the concrete reinforcement. Securing such items in position by wiring or welding them to the reinforcement will not be permitted.

2. Openings for pipes, inserts for pipe hangers and brackets, and the setting of anchors shall, where practicable, be provided for during the placing of concrete.

3. Anchor bolts shall be accurately set, and shall be maintained in position by templates while being embedded in concrete.

4. The surfaces of all metalwork to be in contact with concrete shall be thoroughly cleaned of all dirt, grease, loose scale and rust, grout, mortar, and other foreign substances immediately before the concrete is placed.

3.03 PLACING CONCRETE

A. Placing of concrete shall conform to the applicable requirements of Chapter 8 of ACI 301 and the requirements of this Section.

B. Non-Conforming Work or Materials

1. Concrete which upon or before placing is found not to conform to the requirements specified herein shall be rejected and immediately removed from the Work. Concrete which is not placed in accordance with these Specifications, or which is of inferior quality, shall be removed and replaced by and at the expense of the Contractor.

C. Unauthorized Placement

1. No concrete shall be placed except in the presence of duly authorized representative of the Engineer. The Contractor shall notify the Engineer at least 24 hours in advance of placement of any concrete.

D. Placement in Wall Forms

1. Concrete shall not be dropped through reinforcement steel or into any deep form, whether reinforcement is present or not, causing separation of the coarse aggregate from the mortar on account of repeatedly hitting rods or the sides of the form as it falls, nor shall concrete be placed in any form in such a manner as to leave accumulation of mortar on the form surfaces above the placed concrete. In such cases, some means such as the use of hoppers and, if necessary, vertical ducts of canvas, rubber, or metal shall be used for placing concrete in the forms in a manner that it may reach the place of final deposit without separation. In no case shall the free fall of concrete exceed 4 feet below the ends of ducts, chutes, or buggies.

2. Concrete shall be uniformly distributed during the process of depositing and in no case after depositing shall any portion be displaced in the forms more than 6 feet in horizontal direction. Concrete in forms shall be deposited in uniform horizontal layers not deeper than 2 feet; and care shall be taken to avoid inclined layers or inclined construction joints except where such are required for sloping members. Each layer shall be placed while the previous layer is still soft. The rate of placing concrete in forms shall not exceed 5 feet of vertical rise per hour.

E. Casting New Concrete Against Old

1. An epoxy adhesive bonding agent shall be applied to set surfaces of construction joints according to the manufacturer's written recommendations.

F. Conveyor Belts and Chutes

1. All ends of chutes, hopper gates, and all other points of concrete discharge throughout the Contractor's conveying, hoisting and placing system shall be so designed and arranged that concrete passing from them will not fall separated into whatever receptacle immediately receives it. Conveyor belts, if used, shall be of a type acceptable to the Engineer. Chutes longer than 50 feet will not be permitted. Minimum slopes of chutes shall be such that concrete of the specified consistency will readily flow in them. If a conveyor belt is used, it shall be wiped clean by a device operated in such a manner that none of the mortar adhering to the belt will be wasted. All conveyor belts and chutes shall be covered. Sufficient illumination shall be provided in the interior of all forms so that the concrete at the places of deposit is visible from the deck or runway.

G. Placement in Slabs

1. Concrete placed in sloping slabs shall proceed uniformly from the bottom of the slab to the top, for the full width of the pour. As the work progresses, the concrete shall be vibrated and carefully worked around the slab reinforcement, and the surface of the slab shall be screeded in an up slope direction.

H. Temperature of Concrete

1. The temperature of concrete when it is being placed shall be not more than 90 degrees F. Concrete ingredients shall not be heated to a temperature higher than that necessary to keep the temperature of the mixed concrete, as placed, from falling below the specified minimum temperature. If concrete is placed when the weather is such that the temperature of the concrete would exceed 90 degrees Fahrenheit, the Contractor shall employ effective means, such as precooling of aggregates and mixing water using ice or placing at night, as necessary to maintain the temperature of the concrete, as it is placed, below 90 degrees F. The Contractor shall be entitled to no additional compensation on account of the foregoing requirements. During summer months concrete pours shall be scheduled in the morning or early part of the day when temperatures are cooler.

I. Pumping Equipment

1. Pumping equipment and procedures if used shall conform to the recommendations contained in the report of ACI Committee 304 on Placing Concrete by Pumping

Methods, ACI 304.2R. The specified slump shall be measured at the point of discharge. The loss of slump in pumping shall not exceed 1-1/2 inches.

J. The order of placing concrete in all parts of the work shall be acceptable to the Engineer. In order to minimize the effects of shrinkage, the concrete shall be placed in units as bounded by construction joints shown on the Drawings. The placing of units shall be done by placing alternate units in a manner such that each unit placed shall have cured at least 7 days before the contiguous unit or units are placed, except that the corner sections of vertical walls shall not be placed until the 2 adjacent wall panels have cured at least 14 days.

K. The surface of the concrete shall be level whenever a run of concrete is stopped. To insure a level, straight joint on the exposed surface of walls, a wood strip at least 3/4-inch thick shall be tacked to the forms on these surfaces. The concrete shall be carried about 1/2-inch above the underside of the strip. About one hour after the concrete is placed, the strip shall be removed and any irregularities in the edge formed by the strip shall be leveled with a trowel and all laitance shall be removed.

L. As concrete is placed in the forms or in excavations, it shall be thoroughly settled and compacted, throughout the entire depth of the layer which is being consolidated, into a dense, homogeneous mass, filling all corners and angles, thoroughly embedding the reinforcement, eliminating rock pockets, and bringing only a slight excess of water to the exposed surface of concrete during placement. Vibrators shall be high speed power vibrators (8000 to 10,000 rpm) of an immersion type in sufficient number and with (at least one) standby units as required.

M. Care shall be used in placing concrete around waterstops. The concrete shall be carefully worked by rodding and vibrating to make sure that all air and rock pockets have been eliminated. Where flat strip type waterstops are placed horizontally, the concrete shall be worked under the waterstops by hand, making sure that all air and rock pockets have been eliminated. Concrete surrounding the waterstops shall be given additional vibration, over and above that used for adjacent concrete placement to assure complete embedment of the waterstops in the concrete.

N. Concrete in walls shall be internally vibrated and at the same time, stirred, or worked with suitable appliances, tamping bars, shovels, or forked tools until it completely fills the forms or excavations and closes snugly against all surfaces. Subsequent layers of concrete shall not be placed until the layers previously placed have been worked thoroughly as specified. Vibrators shall be provided in sufficient numbers, with standby units as required, to accomplish the results herein specified within 15 minutes after concrete of the prescribed consistency is placed in the forms. The vibrating head shall be kept from contact with the surfaces of the forms. Care shall be taken not to vibrate concrete excessively or to work it in any manner that causes segregation of its constituents.

3.04 CONCRETE FINISHING

A. Concrete finishes are specified in Section 03350 entitled "Concrete Finishes".

3.05 CURING AND PROTECTION

A. Curing is specified in Section 03370 entitled "Concrete Curing".

3.06 CONCRETE IN COLD WEATHER

A. Cold weather concreting procedures shall be in accordance with the requirements of ACI 306.

3.07 CONCRETE IN HOT WEATHER

A. Hot weather concreting procedures shall conform to the requirement of ACI 305.

3.08 PLACING CONCRETE UNDERWATER (TREMIE CONCRETE)

A. Placing concrete underwater will be permitted only when shown on the Drawings. Concrete deposited under water shall be carefully placed in a compacted mass in final position by means of a tremie, a closed bottom dump bucket or other approved method. Care must be exercised to maintain still water at the point of deposit. Concrete shall not be placed in running water. The consistency of the concrete shall be regulated to prevent segregation of materials. The method of depositing concrete shall be regulated such that the concrete enters the mass of the previously place concrete from within, displacing water with a minimum disturbance to the surface of the concrete.

B. Tremie shall consist of a tube having a diameter of not less than 10 inches and constructed in sections having flanged couplings fitted with gaskets. The tremie shall be supported to permit free movement of the discharge and over the entire top surface of the work and shall permit rapid lowering when necessary to choke off or retard the flow. The discharge end shall be entirely sealed at all times and the tremie tube kept full to the bottom of the hopper. When a batch is dumped into the hopper, the tremie shall be slightly raised, but not out of the concrete at the bottom, until the batch discharges to the bottom of the hopper. The flow shall then be stopped by lowering the tremie. The flow shall be continuous until the placement has been completed.

3.09 PLACING CONCRETE UNDER PRESSURE (PUMPING)

A. Where concrete is conveyed and placed by mechanically applied pressure, the equipment shall have the capacity for the operation. The operation of the pump shall be such that a continuous stream of concrete without air pockets is produced. To obtain the least line resistance, the layout of the pipeline system shall contain a minimum number of bends with no change in pipe size. If two sizes of pipe must be used, the smaller diameter should be used at the pump end and the larger at the discharge end. When pumping is completed, the concrete remaining in the pipelines, if it is to be used, shall be ejected in such a manner that there will be no contamination of the concrete or separation of the ingredients.

B. No aluminum parts shall be in contact with the concrete during the entire placing of concrete under pressure at any time.

C. Prior to placing concrete under pressure, the Contractor shall submit the concrete mix design together with test results from a recognized testing laboratory proving the

proposed mix meets all requirements. In addition, at the Contractor's option, an actual pumping test under field conditions may be performed prior to use of the accepted mix. This test requires a duplication of anticipated site conditions from beginning to end. The batching and truck mixing shall be the same as will be used; the same pump and operator shall be present and the pipe and pipe layouts will reflect the maximum height and distance contemplated.

D. If the pumped concrete does not produce satisfactory end results, the Contractor shall discontinue the Pumping operation and proceed with the placing of concrete using conventional methods.

E. The pumping equipment must have two cylinders and be designed to operate with one cylinder only in case the other one is not functioning. In lieu of this requirement, the Contractor may have a standby pump on the site during pumping.

F. The minimum diameter of the hose (conduits) shall be four inches.

G. Pumping equipment and hoses (conduits) that are not functioning properly shall be replaced.

3.10 ORDER OF PLACING CONCRETE

A. In order to minimize the effects of shrinkage, the concrete shall be placed in units as bounded by construction joints shown on the Drawings and maximum lengths as indicated on Drawings. The placing of units shall be done by placing alternate units in a manner such that each unit placed shall be have cured at least seven days before the contiguous unit or units are placed, except that the corner sections of vertical walls shall not be placed until the two adjacent wall panels have cured at least 14 days.

B. The surface of the concrete shall be level whenever a run of concrete is stopped.

3.11 DEFECTIVE CONCRETE

A. As soon as forms are removed, all exposed surfaces shall be carefully examined and any irregularities shall be immediately rubbed or ground in a satisfactory manner in order to secure a smooth, uniform, and continuous surface. Plastering or coating of surfaces to be smoothed will not be permitted. No repairs shall be made until reviewed by the Engineer. In no case will extensive patching of honeycombed concrete be permitted. Concrete containing minor voids, holes, honeycombing, or similar depression defects shall have them repaired as specified herein. Concrete containing extensive voids, holes, honeycombing, or similar depression defects, shall be completely removed and replaced. All repairs and replacements herein specified shall be promptly executed by the Contractor at its own expense.

B. Defective surfaces to be repaired as specified in Article 3.11, Paragraph A of this Section, shall be cut back from trueline a minimum depth of 1/2 inch over the entire area. Feathered edges will not be permitted. Where chipping or cutting tools are not required in order to deepen the area properly, the surface shall be prepared for bonding by the removal of all laitance or soft material, and not less than 1/32 inch depth of the surface film from all hard portions. The material used for repair proposed shall be approved by the Engineer.

C. Holes left by tie rod cones shall be repaired in an acceptable manner with dry-packed cement grout or premixed patching material as accepted by the Engineer.

D. All repairs shall be built up and shaped in such a manner that the completed work will conform to the requirements of Article 3.04 or 3.05 of this Section, as applicable, using acceptable methods which will not disturb the bond, cause sagging, or cause horizontal fractures. Surfaces of said repairs shall receive the same kind and amount of curing treatment as required for the concrete in the repaired section.

E. Prior to backfilling, all cracks that may have developed shall be "vee'd" and filled with sealant conforming to the requirements of Section 07920 entitled, "Sealants and Caulking". This repair method shall be done on the faces of members in contact with fill.

3.12 CARE AND REPAIR OF CONCRETE

A. The Contractor shall protect all concrete against injury or damage from excessive heat, lack of moisture, overstress, or any other cause until final acceptance by the City. Particular care shall be taken to prevent the drying of concrete and to avoid roughening or otherwise damaging the surface. Any concrete found to be damaged, or which may have been originally defective, or which becomes defective at any time prior to the final acceptance of the completed work, or which departs from the established line or grade, or which, for any other reason, does not conform to the requirements of the Contract Documents, shall be satisfactorily repaired or removed and replaced with acceptable concrete at the Contractor's expense. This stipulation includes concrete experiencing cracking due to drying or thermal shrinkage of the concrete. Structural cracks shall be repaired using an epoxy injection system approved by the Engineer. Non-structural cracks shall be repaired using a hydrophilic resin pressure injected grout system approved by the Engineer, unless other means or repair are deemed necessary and approved by the Engineer.

3.13 CONCRETE SEALER

A. Contractor shall apply a sealer to the top surface of all finished concrete floor slabs and equipment pads which are to remain unpainted and not intended to be immersed unless stated otherwise. Sealer shall be as specified in Specification Section 03350 entitled “Concrete Finishes”.

- END OF SECTION -

SECTION 03301

REINFORCED CONCRETE

PART 1 - GENERAL

1.01 REFERENCES

A. The following is a list of standards which may be referenced in this section:

1. American Concrete Institute (ACI):

   a. 301, Specifications for Structural Concrete for Buildings.

   b. 305R, Hot Weather Concreting.

   c. 306R, Cold Weather Concreting.

   d. 318/318R, Building Code Requirements for Reinforced Concrete.

   e. 347, Formwork for Concrete.

2. ASTM International (ASTM):

   a. A497, Standard Specification for Steel Welded Wire Fabric, Deformed, for Concrete Reinforcement.

   b. A615, Standard Specification for Deformed and Plain Billet-Steel Bars for Concrete Reinforcement.

   c. C31, Standard Practice for Making and Curing Concrete Test Specimens in the Field.

   d. C39, Standard Test Method for Compressive Strength of Cylindrical Concrete Specimens.

   e. C94, Standard Specification for Ready-Mixed Concrete.

   f. C150, Standard Specification for Portland Cement.

   g. C260, Standard Specification for Air-Entraining Admixtures for Concrete.

   h. C309, Standard Specification for Liquid Membrane-Forming Compounds for Curing Concrete.

   i. C494, Standard Specification for Chemical Admixtures for Concrete.

j. C618, Standard Specification for Fly Ash and Raw or Calcined Natural Pozzolan for Use as a Mineral Admixture in Portland Cement Concrete.

k. D994, Standard Specification for Preformed Expansion Joint Filler for Concrete (Bituminous Type).

3. Concrete Reinforcing Steel Institute (CRSI):

a. Manual of Standard Practice.

b. Recommended Practice for Placing Reinforcing Bars.

1.02 SUBMITTALS

A. Action Submittals:

1. Reinforcing steel in accordance with CRSI Manual of Standard Practice.

2. Curing compound data.

3. Complete data on the concrete mix, including aggregate gradations and admixtures, in accordance with ASTM C94.

B. Informational Submittals:

1. Manufacturer's application instructions for curing compound.

2. Ready-mix delivery tickets for each truck in accordance with ASTM C94.

1.03 QUALITY ASSURANCE

A. Formwork: Unless otherwise specified, follow the recommendations of ACI 347.

B. Concrete and Reinforcement: Unless otherwise specified, meet the requirements of ACI 301 and ACI 318/318R.

C. Hot Weather Concreting: Conform to ACI 305R.

1.04 ENVIRONMENTAL REQUIREMENTS

A. Do not use curing compound where solvents in the curing compounds are prohibited by state or federal air quality laws. Use only water curing methods.

PART 2 - PRODUCTS

2.01 CONCRETE

A. Ready-mixed meeting ASTM C94, Option A.

B. Portland Cement: ASTM C150, Type I or II.

C. Admixtures:

1. Air-Entraining: ASTM C260.

2. Water-Reducing: ASTM C494, Type A or Type D.

3. Superplasticizers: ASTM C494, Type F or Type G.

4. Fly Ash: ASTM C618, Class C or Class F.

5. Color Pigments: Inert mineral or metaloxide pigments, either natural or synthetic; resistant to lime and other alkalies.

D. Mix Design:

1. Minimum Allowable 28-day Compressive Field Strength**:** 3,000 psi when cured and tested in accordance with ASTM C31 and ASTM C39.

2. Water-Cement Ratio: 0.48, maximum.

3. Cement Content: 540 pounds per cubic yard, minimum.

4. Coarse Aggregate Size: 3/4 inch(es) and smaller.

5. Slump Range: 3 inches to 5 inches.

6. Air Entrainment: Between 3 and 6 percent by volume. Use 4 percent minimum for concrete placed under requirements of cold weather concreting.

7. Water Reducers: Use in concrete without plasticizers.

8. Superplasticizers: Use for structures.

E. Mixing: Minimum 70 and maximum 270 revolutions of mixing drum. Nonagitating equipment is not allowed.

2.02 REINFORCING STEEL

A. Deformed Bars: ASTM A615, Grade 60.

B. Welded Wire Fabric: ASTM A497.

2.03 ANCILLARY MATERIALS

A. Expansion Joint Filler: ASTM D994, 1/2-inch thick, or as shown.

B. Nonshrink Grout:

1. Color: To match concrete.

2. Manufacturers and Products:

   a. Master Builder Co., Cleveland, OH; Master Flow 928.

   b. Euclid Chemical Co., Cleveland, OH; Hi-flow Grout.

C. Clear Floor Hardener (Surface-Applied): Colorless, aqueous solution of zinc and magnesium fluosilicate with a minimum 2 pounds of crystals per gallon.

1. Manufacturers:

   a. Master Builders, Co., Cleveland, OH.

   b. Tamms Industries, Inc., Kirkland, IL.

   c. Sonneborn, Minneapolis, MN.

PART 3 - EXECUTION

3.01 FORMWORK

A. Form Materials:

1. Use hard plastic finished plywood for exposed areas, and new shiplap or plywood for unexposed areas.

2. Earth cuts may be used for forming footings.

B. Form Ties:

1. Fixed conical or spherical type inserts that remain in contact with forming material and allow for dry packing of form tie holes.

2. Ties shall withstand pressures and limit deflection of forms to acceptable limits.

3. Wire ties are not acceptable.

C. Construction:

1. In accordance with ACI 347.

2. Make joints tight to prevent escape of mortar and to avoid formation of fins.

3. Brace as required to prevent distortion during concrete placement.

4. On exposed surfaces locate form ties in uniform pattern or as shown.

5. Construct so ties remain embedded in the wall with no metal within 1 inch of concrete surface when forms, inserts, and tie ends are removed.

D. Form Removal:

1. Remove after concrete has attained 28-day strength, or approval is obtained in writing from ENGINEER.

2. Remove forms with care to prevent scarring and damaging the surface.

3. Prior to form removal, provide thermal protection for concrete being placed under the requirements of cold weather concreting.

3.02 PLACING REINFORCING STEEL

A. Unless otherwise specified, place reinforcing steel in accordance with CRSI Recommended Practice for Placing Reinforcing Bars.

B. Splices and Laps:

1. Top Bars: Horizontal bars placed such that 12 inches of fresh concrete is cast below in single placement.

2. Horizontal wall bars are considered top bars.

3. Lap top bars 42 diameters or minimum 24 inches.

4. Lap all other bars 30 diameters or minimum 18 inches.

5. Tie splices with 18-gauge annealed wire as specified in CRSI Standard.

3.03 PLACING CONCRETE

A. Place concrete in accordance with ACI 301.

B. Prior to placing concrete, remove water from excavation and debris and foreign material from forms. Check reinforcing steel for proper placement and correct discrepancies.

C. Before depositing new concrete on old concrete, clean surface using sandblast or bushhammer or other mechanical means to obtain a 1/4-inch rough profile, and pour a cement-sand grout to minimum depth of 1/2 inch over surface. Proportion 1 part cement to 2.5 parts sand by weight.

D. Place concrete as soon as possible after leaving mixer, without segregation or loss of ingredients, without splashing forms or steel above, and in layers not over 2 feet deep. Place within 1-1/2 hours after adding cement to mix.

E. Eight feet maximum vertical drop to final placement, when not guided with chutes or other devices to prevent segregation due to impact with reinforcing.

3.04 COMPACTION

A. Vibrate concrete as follows:

1. Apply approved vibrator at points spaced not farther apart than vibrator's effective radius.

2. Apply close enough to forms to vibrate surface effectively but not damage form surfaces.

3. Vibrate until concrete becomes uniformly plastic.

4. Vibrator must penetrate fresh placed concrete and into previous layer of fresh concrete below.

3.05 CONSTRUCTION JOINTS

A. Locate as shown or as approved.

B. Maximum Spacing between Construction Joints: 40 feet.

3.06 FINISHING

A. Floor Slabs and Tops of Walls:

1. Screed surfaces to true level planes.

2. After initial water has been absorbed, float with wood float and trowel with steel trowel to smooth finish free from trowel marks.

3. Do not absorb wet spots with neat cement.

B. Unexposed Slab Surfaces: Screed to true surface, bull float with wood float, and wood trowel to seal surface.

C. Tolerances: Floors shall not vary from level or true plane more than 1/4 inch in 10 feet when measured with a straightedge.

D. Exterior Slabs and Sidewalks:

1. Bull float with wood float, wood trowel, and lightly trowel with steel trowel.

2. Finish with broom to obtain nonskid surface.

3. Finish exposed edges with steel edging tool.

4. Mark walks transversely at 5-foot intervals, or in pattern shown on Drawings, with jointing tool.

3.07 FINISHING AND PATCHING FORMED SURFACES

A. Cut out honeycombed and defective areas.

B. Cut edges perpendicular to surface at least 1 inch deep. Do not feather edges. Soak area with water for 24 hours.

C. Patch with shotcrete or low-pressure mortar as specified in Section 03720, Vertical and Overhead Concrete Surface Repair Systems.

D. Finish surfaces to match adjacent concrete.

E. Keep patches damp for minimum 7 days or spray with curing compound to minimize shrinking.

F. Fill form tie holes with nonshrink grout.

3.08 PROTECTION AND CURING

A. Protect fresh concrete from direct rays of sunlight, drying winds, and wash by rain.

B. Keep concrete slabs continuously wet for a 7-day period. Intermittent wetting is not acceptable.

C. Use curing compound only where approved by ENGINEER. Cure formed surfaces with curing compound applied in accordance with manufacturer's directions as soon as forms are removed and finishing is completed.

D. Remove and replace concrete damaged by freezing.

3.09 FLOOR HARDENER

A. Use where noted or scheduled.

B. Follow manufacturer's application instructions.

3.10 FIELD TESTS

A. Evaluation of Concrete Field Strength: In accordance with ACI 318/318R.

-END OF SECTION-

SECTION 03370

CONCRETE CURING

PART 1 – GENERAL

1.01 THE REQUIREMENT

A. The Contractor shall protect all freshly deposited concrete from premature drying and excessively hot or cold temperatures, and maintain with minimal moisture loss at a relatively constant temperature for the period of time necessary for the hydration of the cement and proper hardening of the concrete in accordance with requirements specified herein.

1.02 RELATED WORK SPECIFIED ELSEWHERE

A. Section 03100 - Concrete Framework

B. Section 03300 - Cast-in-Place Concrete

C. Section 03315 - Grout

D. Section 03350 - Concrete Finishes

1.03 SUBMITTALS

A. In accordance with the procedures and requirements set forth in the Section entitled "Submittals", the contractor shall submit the following:

1. Proposed procedures for protection of concrete under wet weather placement conditions.

2. Proposed normal procedures for protection and curing of concrete.

3. Proposed special procedures for protection and curing of concrete under hot and cold weather conditions.

4. Proposed method of measuring concrete surface temperature changes.

5. Manufacturer's literature and material certification for proposed curing compounds.

1.04 REFERENCE SPECIFICATIONS, CODES AND STANDARDS

A. Without limiting the generality of other requirements of these specifications all work hereunder shall conform to the applicable requirements of the referenced portions of the following documents, to the extent that the requirements therein are not in conflict with the provisions of this Section.

1. ACI 301 Specifications for Structural Concrete for buildings

2. ACI 304 Guide for Measuring, Mixing, Transporting, and Placing Concrete

3. ACI 305 Hot Weather Concreting

4. ACI 306 Cold Weather Concreting

5. ACI 308 Standard Practice for Curing Concrete

6. ASTM C171 Specifications for Sheet Materials for Curing Concrete

7. ASTM C309 Specification for Liquid Membrane - Forming Compounds for Curing Concrete

8. ASTM C1315 Standard Specification for Liquid Membrane-Forming Compounds Having Special Properties for Curing and Sealing Concrete

1.05 QUALITY ASSURANCE

A. Curing compound shall not be used on any surface where concrete, coatings, or other material will be bonded unless the manufacturer certifies that the curing compound will not prevent bond or indicates measures to be taken to completely remove the curing compound from areas to receive bonded applications, and specifically approved by the Engineer.

B. Care shall be taken to ensure that curing compounds are compatible with all finish concrete castings.

C. Curing compounds shall not be used on surfaces exposed to water in potable water storage tanks and treatment plants unless curing compound is certified in accordance with ANSI/NSF Standard 61.

PART 2 – PRODUCTS

2.01 LIQUID MEMBRANE-FORMING CURING COMPOUND

A. Clear curing and sealing compound shall be a clear styrene acrylate type complying with ASTM C 1315, Type 1, Class A with a minimum solids content of 30%. Moisture loss shall not be greater than 0.40 kg/m2 when applied at 300 sq.ft./gal. Manufacturer's certification is required. Acceptable products are Super Diamond Clear VOX by the Euclid Chemical Company, MasteKure CC 300 SB by BASF Master Builder Solutions, and Cure & Seal 30 Plus by Symons Corporation.

B. Where specifically approved by Engineer, on slabs to receive subsequent applied finishes, compound shall conform to ASTM C 309. Acceptable products are "Kurez DR VOX" or "Kurez W VOX" by the Euclid Chemical Company. Install in strict accordance with manufacturer's requirements.

2.02 EVAPORATION REDUCER

A. Evaporation reducer shall be BASF, "MasterKure ER 50", or Euclid Chemical "Euco-Bar".

2.03 BURLAP MATS

A. Burlap mats shall conform to AASHTO M-182.

PART 3 – EXECUTION

3.01 PROTECTION AND CURING

A. All freshly placed concrete work shall be protected from the elements, flowing water and from defacement of any nature during construction operations.

B. As soon as the concrete has been placed and horizontal top surfaces have received their required finish, provision shall be made for maintaining the concrete in a moist condition for at least a 7-day period thereafter except for high early strength concrete, for which the period shall be at least the first three days after placement. Horizontal surfaces shall be kept covered, and intermittent, localized drying will not be permitted.

C. Walls that will be exposed on one side with either fluid or earth backfill on the opposite side shall be continuously wet cured for a minimum of five days. Use of a curing compound will not be acceptable for applications of this type.

D. After placing and finishing, use one or more of the following methods to preserve moisture in concrete:

1. Ponding or continuous fogging or sprinkling.

2. Application of mats or fabric kept continuously wet.

3. Continuous application of steam (under 150 degrees Fahrenheit).

4. Application of sheet materials conforming to ASTM C171.

5. If approved by the Engineer, application of a curing compound in accordance with Article 3.05. Apply the compound in accordance with the manufacturer's recommendation on after water sheen has disappeared from the concrete surface and after finishing operations. The rate of application shall not exceed 200 square feet per gallon. For rough surfaces, apply in two directions at right angles to each other.

E. Keep absorbent forms wet until they are removed. After form removal, cure concrete by one of the methods in paragraph D.

F. Any of the curing procedures used in Paragraph 3.01-D may be replaced by one of the other curing procedures listed in Paragraph 3.01-D after the concrete is one-day old. However, the concrete surface shall not be permitted to become dry at any time.

3.02 CURING CONCRETE UNDER COLD WEATHER CONDITIONS

A. Suitable means shall be provided for a minimum of 72 hours after placing concrete to maintain it at or above the minimum as placed temperatures specified in Article 3.02 herein. During the 72-hour period, the concrete surface shall not be exposed to air more than 20°F above the minimum as placed temperatures.

B. Stripping time for forms and supports shall be increased as necessary to allow for retardation in concrete strength caused by colder temperatures. This retardation is magnified when using concrete made with blended cements or containing fly ash or ground granulated blast furnace slag. Therefore, curing times and stripping times shall be further increased as necessary when using these types of concrete.

C. The methods of protecting the concrete shall be approved by the Engineer and shall be such as will prevent local drying. Equipment and materials approved for this purpose shall be on the site in sufficient quantity before the work begins. The Contractor shall assist the Engineer by providing holes in the forms and the concrete in which thermometers can be placed to determine the adequacy of heating and protection. All such thermometers shall be furnished by the Contractor in quantity and type which the Engineer directs.

D. Curing procedures during cold weather conditions shall conform to the requirements of ACI 306.

3.03 CURING CONCRETE UNDER HOT WEATHER CONDITIONS

A. When air temperatures exceed 85°F, the Contractor shall take extra care in placing and finishing techniques to avoid formation of cold joints and plastic shrinkage cracking. If ordered by the Engineer, temporary sun shades and/or windbreakers shall be erected to guard against such developments, including generous use of wet burlap coverings and fog sprays to prevent drying out of the exposed concrete surfaces.

B. Immediately after screeding, horizontal surfaces shall receive an application of evaporation reducer. Apply in accordance with manufacturer's instructions. Final finish work shall begin as soon as the mix has stiffened sufficiently to support the workmen.

C. Curing and protection of the concrete shall begin immediately after completion of the finishing operation. Continuous moist-curing consisting of method 1 or 2 listed in paragraph 3.01D is mandatory for at least the first 24 hours. Method 2 may be used only if the finished surface is not marred or blemished during contact with the coverings.

D. At the end of the initial 24-hour period, curing and protection of the concrete shall continue for at least four (4) additional days using one of the methods listed in paragraph 3.01D.

E. Curing procedures during hot weather conditions shall conform to the requirements of ACI 305.

3.04 USE OF CURING COMPOUND

A. Curing compound shall be used only where specifically approved by the Engineer. Curing compound shall not be used on surfaces to receive subsequent coatings. Curing compound shall never be used for curing exposed walls with fluid or earth backfill on the opposite side. A continuous wet cure for a minimum of five days is required for these applications. Curing compound shall not be used on surfaces exposed to water in potable water storage tanks and treatment plants unless curing compound is certified in accordance with ANSI/NSF Standard 61.

B. When permitted, the curing compound shall maintain the concrete in a moist condition for the required time period, and the subsequent appearance of the concrete surface shall not be affected.

C. The compound shall be applied in accordance with the manufacturer's recommendations after water sheen has disappeared from the concrete surface and after finishing operations. The rate of application shall not exceed 300 square feet per gallon. For rough surfaces, apply in two directions at right angles to each other.

3.05 EARLY TERMINATION OF CURING

A. Moisture retention measures may be terminated earlier than the specified times only when at least one of the following conditions is met:

1. The strength of the concrete reaches 85 percent of the specified 28-day compressive strength in laboratory-cured cylinders representative of the concrete in place, and the temperature of the in-place concrete has been constantly maintained at 50 degrees Fahrenheit or higher.

2. The strength of concrete reaches the specified 28-day compressive strength as determined by accepted nondestructive methods or laboratory-cured cylinder test results.

- END OF SECTION -

SECTION 04220

CONCRETE BLOCK MASONRY

PART 1 – GENERAL

1.01 THE REQUIREMENT

A. The Contractor shall construct all concrete masonry Work for the project, complete, including furnishing, fabricating, and placing of required reinforcing steel and the furnishing and setting of embedded items and all other appurtenant work, all in accordance with the requirements of the Contract Documents. The Contractor is responsible for coordinating the Work of this section with that of other trades.

B. All concrete block masonry that contains empty cells after installation shall be provided with a foamed-in-place insulation specified herein.

1.02 RELATED WORK SPECIFIED ELSEWHERE

A. Section 01300 - Submittals

B. Section 03300 - Cast in Place Concrete

1.03 REFERENCE SPECIFICATIONS, CODES, AND STANDARDS

A. Without limiting the generality of other requirements of the Specifications, all Work specified herein shall conform to or exceed the requirements of the Florida Building Code (FBC) and the applicable requirements of the following documents to the extent that the provisions of such documents are not in conflict with the requirements of this Section.

B. Products and their installation shall be in accordance with the following trade standards, as applicable:

1. Masonry Design Manual (MDM) shall mean the Masonry Design Manual published by the Masonry Industry Advancement Committee.

2. Manufacturer's published recommendations and specifications.

3. Federal Specifications (FS) as reference herein.

4. American Society for Testing and Materials (ASTM) Specifications, as referenced herein.

5. "Specifications for the Design and Construction of Load Bearing Concrete Masonry" published by the National Concrete Masonry Assoc., P.O. Box 9185, Rossylin Station, Arlington, VA.

6. "Building Code Requirements for Concrete Masonry Structures" (ACI 530/ASCE 5).

7. "Specifications for Masonry Structures" (ACI 530.1/ASCE 6).

1.04 CONTRACTOR SUBMITTALS

A. If requested, samples of concrete masonry unit (CMU) color ranges for each texture, as specified under products, shall be submitted to the Engineer for selection of color. Full size samples of the blocks selected shall be submitted for final review by the Engineer after color selection.

B. Submit compressive test reports of concrete block units satisfying the design strength requirements noted on the drawings and a notarized affidavit that the block units conform to the requirements of this Section.

C. Samples of mortar colors shall be submitted for color selection by the Engineer.

D. Submit manufacturer's product data and installer's detailed descriptive plans for installing the foamed-in-place wall insulation. The insulation shall be installed by installers certified by the manufacturer. Submit manufacturer certification of the installer contracted to perform the work.

E. Manufacturer's literature indicating mortar strength and composition.

F. Submit shop drawings for precast concrete lintels.

G. Mortar mix and water repellant admixture.

H. Reinforcements.

I. Ties.

J. Control joint filler (with manufacturer's literature).

K. Grout mix design - Quantities listed in the mix design shall be listed both by weight and by bulk volume for each component.

L. Accessories.

M. The Contractor through the manufacturer of the concrete masonry units shall furnish certificates, in triplicate, prior to delivery of any units to the jobsite. Each certificate shall be signed by an authorized officer of the manufacturing company and shall contain the name and address of the Contractor, the project location, the quantities, and date or dates of shipment and delivery to which the certificate applies. Units shall be certified for conformance with these Specifications.

N. Cold and/or hot weather construction procedures in accordance with ACI 530.1/ASCE 6 sections 2.3.2.2. and 2.3.2.3.

O. Cleaning procedures and cleaner for each masonry type.

P. Shop Drawings, Reinforced Unit Masonry: Submit shop drawings for fabrication, bending, and placement of reinforcing bars. Shop drawings shall comply with ACI 315 "Manual of Standard Practice for Detailing Reinforced Concrete Structures". Shop drawings shall include bar schedules, diagrams of bent bars, stirrup spacing, lateral ties and other arrangements and assemblies as required for fabrication and placement of reinforcing for unit masonry work.

1.05 QUALITY ASSURANCE

A. Before any masonry is laid, a sample panel shall be constructed for approval by the Engineer. The sample panel shall be 6 feet wide by 4 feet high, showing the CMU face, reinforcement, grouting, and type, color and tooling of mortar and bond. The approved wall sample panel shall remain in place for the duration of all masonry work, to serve as the standard of reference for all masonry. The sample panel shall be removed by the Contractor at the completion of the project.

B. The City reserves the right to test materials for compliance with these specifications. Sampling and testing will be done in accordance with ASTM standards by an independent testing agency employed by the City. Materials that fail to meet requirements are considered defective. Subsequent tests to establish compliance (of the same or new materials) shall be paid for by the Contractor.

1. Mortar testing shall be performed in accordance with ASTM C 109.

2. Masonry grout testing shall be performed in accordance with ASTM C 1019.

1.06 SHIPPING, HANDLING, AND STORAGE

A. All mortar materials shall be delivered, stored, and handled so as to prevent damage, deterioration, or contamination. All materials shall be stored under cover in a dry place and in the original packaging.

B. All concrete masonry units shall be stored under cover, in a dry place and in a manner to prevent damage, breakage, or staining. Blocks shall be delivered to the site dry, in conformance with the specification limitation for moisture content, and kept dry by storing off the ground and under cover. Blocks which have become wet shall be removed from the site by the Contractor.

C. All accessories shall be delivered to the site and stored in the manufacturers' original packaging. All materials shall be stored above ground and under weathertight cover.

PART 2 – PRODUCTS

2.01 CONCRETE MASONRY UNITS

A. General

1. All concrete masonry units shall be load bearing blocks conforming to ASTM C 90. Units shall be normal weight units unless shown or specified otherwise. Block shall be smooth finish block. Net area compressive strength of concrete masonry units shall be a minimum of 1,900 psi when tested in accordance with ASTM C 140. Compressive strength F'm shall be minimum of 1500 psi in accordance with ACI 530.1 when these units are tested with the mortar specified, unless otherwise indicated on the structural drawings. Reinforced wall units shall be 2 cell end blocks with cells aligned vertically when constructed.

2. All units shall be obtained from one manufacturer to ensure even color and texture throughout.

3. Nominal face dimensions shall be 8-inch by 8-inch by 16-inch, 12-inch by 8-inch by 16-inch, or "U" shaped CMU as indicated on the Drawings.

4. All bond beam, corner, lintel, sill, and other specially shaped blocks shall be provided and used where required or necessary. Specially shaped nonstructural blocks may be constructed by sawcutting. Color and texture shall match that of the adjacent units.

B. Sound Absorptive Concrete Masonry Units

1. Sound absorptive concrete masonry units shall be used to construct walls or partitions as indicated on the Drawings.

2. Sound absorptive concrete masonry units shall be Soundblox made on standard block machines using molds furnished by the Proudfoot Company, Inc., Greenwich, Connecticut; or equal. Units shall meet the requirements of ASTM C 90.

3. Soundblox units shall be 8-inch by 8-inch by 16-inch (nominal), and Type RSC as shown on the Drawings.

4. The filler elements shall be installed at the block plant and be fabricated of noncombustible fibrous material. The fillers shall have metal septa laminated to one side of the fibrous material and shall be installed with the septa facing away from the slots. The filler and the septa shall be cut accurately to size, and installed as recommended.

C. Fire-Rated Units: Masonry units for fire-rated walls shall comply with the requirements of Paragraph 2.01, A above and Underwriter's Laboratory requirements for fire rating as shown on the Drawings.

2.02 MORTAR AND GROUT

A. Mortar shall be Type "M" mortar with average compressive strength at 28 days of 2,500 psi; in accordance with ASTM C 270.

B. The mortar shall be dry mixed to laboratory established proportions with only as much water added as required to produce a workable mix.

C. Hydrated lime shall conform to the requirements of ASTM C 207, Type "S", domestic manufactured.

D. Sand shall be clean, durable particles, free from injurious amounts of organic matter. The sand shall conform to the requirements of ASTM C 144.

E. Water shall be from a potable source, suitable for domestic consumption.

F. Admixture for the mortar shall be Master Builders "Omicron Mortarproofing"; Sika Chemical Company "Sika Red Label"; or equal. The admixture shall not be detrimental to the bonding of the mortar.

G. Masonry Grout shall conform to the requirements of ASTM C 476 and ACI 530.1. Grout shall be plant batched peagravel 3000 psi 28-day compressive strength.

H. Sand for grout shall conform to ASTM C 404 or ASTM C 33, as required.

I. Admixture for grout shall be Sika Chemical Company "Sika Grout Aid", Type II; Master Builders "Pozzolith", normal; or equal.

2.03 MASONRY ACCESSORIES

A. The following list of companies manufacture products that are acceptable for this section, subject to conformance with the specified requirements: Dur O Wall Products, A.A. Wire Products; Hohman Barnard, Keystone Steel and Wire Company, or equal.

B. Masonry Joint Reinforcement

1. All masonry joint reinforcement shall be fabricated from cold drawn steel wire, conforming to ASTM A 82.

2. Reinforcement shall consist of two parallel longitudinal deformed wires, not less than 8-gauge, weld connected with cross-wires, not less than 9 gauge, in a triangular pattern. For vertically reinforced walls, cross wires shall be of a rectangular pattern.

3. Out to out spacing of the longitudinal wires shall be 2 inches less than the nominal width of the wall.

4. The distance between the welded contacts of cross wires with each longitudinal wire shall not exceed 16 inches, staggered.

5. Cross wires shall be in the same plane with the longitudinal wires.

6. Reinforcement shall be provided in minimum 10-foot sections. All corners and tees shall be provided prefabricated, of the same materials as the joint reinforcement.

7. Reinforcing bars shall conform to "Specifications for Deformed Billet Steel Bars for Concrete Reinforcement" (ASTM A 615), grade 60, except 1/4" diameter smooth bars which shall be grade 40.

C. Anchor and Ties

1. Anchors and ties shall be hot dip galvanized ferrous metals.

2. Wire mesh ties shall be minimum 16-gauge, 1/2-inch mesh of steel wire. Ties shall be a minimum of 12 inches in length, and 1 inch less in width than the wall in which they are placed.

3. Rigid steel anchors shall be 1 1/2 inch by 1/4 inch with ends turned up 1/4 inch at the outer end.

4. Dovetail anchors shall be minimum 16-gauge, 1 inch wide, and turned up 1/4 inch at the outer end.

5. Corrugated or crimped metal ties shall be made of steel sheet not less than 7/8 inch wide, 22 gauge in thickness, 6 inches in length.

2.04 FOAMED-IN-PLACE MASONRY WALL INSULATION

A. Insulation shall be a two-component, foamed-in-place thermal insulation comprising of an amino-plast resin and a catalyst foaming agent surfactant that when injected into open cavities of block will flow and completely fill the open cells.

B. Foamed-in-place insulation shall conform to the requirements of Core-Fill 500 as manufactured by Tailored Chemical Products, Hickory, NC, or approved equal. Tailored Foam of Florida, Inc., Sanford, Florida is an approved applicator of Core-Fill 500 foam insulation.

C. Insulation shall be non-combustible, Class A building material.

D. Insulation shall have an R value of 4.9 per inch at 32 degrees Fahrenheit per ASTM C-177.

PART 3 – EXECUTION

3.01 GENERAL

A. All Work shall be performed in accordance with the provisions of the FBC for concrete hollow unit masonry.

B. All masonry shall be laid plumb and true to line. Bond shall be maintained such that the horizontal or vertical alignment of the foundation shall not be more than 1 inch out of plumb.

C. The Contractor shall set or embed in the Work all anchors, bolts, reglets, sleeves, conduits, and other items as required. Where bolts or other items are anchored into the masonry, those cells shall be grouted solid after the embedded items are in place.

D. No construction support shall be attached to the wall except where specifically permitted by the Engineer.

E. All masonry slots, chases, or openings required for the proper installation of the Work of other Sections shall be constructed as indicated on the Drawings, or in accordance with information furnished, prior to starting Work in those areas. No chase shall be cut into any constructed hollow unit masonry wall, except as directed or reviewed by the Engineer.

F. Surfaces shall be brushed as Work progresses, and maintained as clean as is practicable. Unfinished Work shall be raked back where possible, and toothed only where absolutely necessary.

G. All fresh or unfinished Work shall be fully covered and protected against rain and wind. Before continuing work, all previously laid Work shall be swept clean. The tops of walls or other unfinished Work shall be protected against all damage by means of waterproof paper, tarpaulins, boards, or other means satisfactory to the Engineer.

H. Anchors and ties shall be placed a minimum of 16 inches vertically and 24 inches horizontally, unless otherwise indicated. Anchors and ties for masonry shall be provided into adjacent concrete walls, columns, or beams at the above specified spacings.

I. Over plumbing and pounding shall be avoided, at corners and jambs, for fitting stretcher units after they are set in position. Where adjustment must be made after mortar has started to harden, the mortar shall be removed and replaced with fresh mortar.

J. Concrete brick shall be used to course out walls which are concealed in the finished work.

K. Masonry units shall be cut straight, and true, using power masonry saws.

L. Cold and hot weather construction

1. No masonry shall be erected when ambient temperature has dropped below 45^0 F unless it is rising and at no time when it has dropped below 40^0 F. Provisions shall be made for heating and drying of materials, and the complete work shall be protected in accordance with ACI 530.1 section 1.8C. Masonry shall not be laid with ice or frost on its surfaces, and no masonry shall be laid on frozen work. Any work which freezes before the mortar has set shall be removed and replaced at the Contractor's own expense. Do not use any admixtures or antifreeze in the mortar.

2. When temperature is above 100^0 F or 90^0 F with a wind velocity greater than 8 MPH, mortar beds shall be spread no more than 4 feet ahead of masonry and masonry shall be set within one minute of spreading mortar.

3.02 LAYOUTS

A. The Contractor shall lay out the coursing horizontally and vertically, as shown on the Drawings.

B. Block cuts less than 4 inches wide shall be avoided.

C. Vertical coursing shall be 8 inches, with 3/8-inch-thick mortar joints.

D. Bed joints shall be indicated to receive masonry joint reinforcing, ties, and/or anchors.

3.03 REINFORCING

A. All reinforced horizontal joints shall be reinforced continuously with ends lapped 8 inches, and laps staggered vertically. Horizontal reinforcing shall have a vertical spacing of 16 inches on center unless noted otherwise. Prefabricated corners and tees shall be provided at all horizontal wall intersections.

B. Reinforcing shall be provided in the bed joints immediately above and below all masonry openings.

C. Mortar joints with wire reinforcement shall be at least twice the thickness of the wire.

D. Where knock out openings are indicated on the Drawings, no steel or joint reinforcement shall run continuously through the openings.

E. Prior to placing metal reinforcing, anchors, and ties, all loose rust, tie wires, tags and all other foreign matter that may reduce bond shall be removed.

F. Reinforcing shall be placed as indicated on the Drawings and general notes. Place a minimum of two No. 5 bars in each bond beam or lintel, and a minimum of one No. 5 bar at all jambs, corners, intersections and wall ends of concrete blockwalls, whether indicated or not. Lintels shall extend 8 inches past the openings. Lap reinforcing bars 48 diameters or 30 inches minimum at splices. All cells containing reinforcing shall be filled solid with grout.

G. When a dowel does not line up with a vertical core, it shall not be sloped more than 1 horizontal in 6 vertical. Dowels shall be grouted into a core in vertical alignment, even though they are in adjacent cell to the vertical wall reinforcing.

3.04 BOND AND JOINTS

A. All masonry units shall be laid in running bond by lapping units in successive courses a distance of one-half unit.

B. The starting joint of foundations and floor slab shall be laid with full mortar coverage on the bed except that the area where grout occurs shall be kept free from mortar so that the grout will bond (contact) with concrete already placed.

C. All courses shall be level, with joints of uniform width. Units shall have full mortar coverage of the face shells in both the horizontal and vertical joints. Reinforced cells shall have mortar coverage on cross webs also to prevent grout leakage to adjacent cells.

D. All joints shall be pointed solid with mortar on both sides and wall of block. Joints in exposed Work shall be finished concave with finishing tool, to create a dense surface. Interior and exterior joints in nonexposed or plaster covered masonry shall be flush.

E. All sound absorptive concrete masonry units shall be laid in stack bond with the open ends of the cavities facing downward, and shall be seated in a full bed of mortar.

F. Slots shall be provided to expose the areas where sound absorption is desired, as indicated on the Drawings. Care shall be taken to ensure that the slots are kept free of mortar or debris above mortar joints.

3.05 CONTROL JOINTS

A. Control joints shall be installed as detailed and where shown on the Drawings or needed.

B. The maximum horizontal distance between vertical control joints shall be 30 feet, but joints shall be located only as reviewed by the Engineer or as shown.

C. Joints shall be equal in width to the standard mortar joints.

D. Horizontal joint reinforcing shall be discontinuous at control joints.

3.06 MORTAR AND GROUT

A. All equipment used in placing, moving, and storing mortar shall be thoroughly cleaned at the end of each day's work.

B. Mortar that, in the opinion of the Engineer, has begun to set shall not be used.

C. All courses shall be laid in full mortar beds. All units shall be laid with mortar applied to the face shells of blocks previously laid, as well as to blocks being laid, to ensure well filled joints.

D. Where new masonry is joined to existing or partially set work, loose mortar and joints shall first be cleaned. When it is necessary to stop a horizontal run, rack back one-half block length in each course; toothing shall not be permitted.

E. Hollow metal frames, mullions, and spaces around built in items shall be filled solidly with grout.

F. Proportioning and Mixing of Mortar

1. Measurement of materials shall be such that the specified proportions are controlled and accurately maintained.

2. Workability of consistency of the mortar on the board shall be sufficiently wet to be worked under the trowel. Water for tempering shall be available on the scaffold at all times. Mortar which has begun to set after initial mixing shall be discarded. Mortar which has stiffened due to evaporation shall be retempered to restore its workability. Retempering the mortar at the mixer shall not be permitted.

3. Mortar shall be machine mixed in a type of mortar mixer which is acceptable to the Engineer, and in which the quantity of water can be accurately and uniformly controlled.

4. The mixing time shall not be less than 5 minutes, approximately 2 minutes of which shall be for mixing the dry materials, and not less than 3 minutes for continuing the mixing after the water has been added.

5. Where hydrated lime is used for mortar requiring a lime content, the Contractor has the option of using the dry mix method or first converting the lime into a putty. Where the dry mix method is employed, the materials for each batch shall be well turned over together until the even color of the mixed, dry materials indicates that the cementitious materials have been thoroughly distributed throughout the mass. After this point, the water shall be gradually added.

G. Mortar and grout drippings shall be cleaned from exposed masonry and adjacent surfaces immediately, to prevent surfaces from being permanently stained. Drippings and smears shall be removed before mortar and/or grout sets or hardens. Mortar extruded beyond faces of walls or partitions shall be removed.

H. Grouting

1. Grouting shall not be started until walls have cured a minimum of 24 hours.

2. Reinforcing steel shall be secured in place and inspected before grouting starts. Inform Engineer for inspection.

3. Mortar drippings shall be kept out of the grout space.

4. Vertical cells to be filled shall have vertical alignment to maintain a continuous unobstructed cell area not less than 2 inches by 3 inches.

5. All cells to be grouted including those with reinforcing shall be solidly filled with grout. Consolidate at time of pouring by puddling (rodding) or vibrating with mechanical vibrators and reconsolidate again after 5 to 10 minutes and no later than 20 minutes to allow water absorption by concrete block.

6. Grout shall be consolidated by puddling or mechanical vibrating during g placement, and reconsolidated after excess moisture has been absorbed, but before plasticity is lost.

7. All anchor bolts and other embedded items shall be securely held in place during the grouting operation.

8. Grouting shall be done in pours no exceeding 10 feet and lifts of a maximum of 5 feet. Provide pre-cut full block height clean out holes at the first course of all cores containing vertical reinforcement. As successive masonry lifts are laid, remove mortar dripping from the grout space and off the reinforcing steel. Prior to grouting and boarding the cleanout opening, remove all leftover mortar drippings and loose materials and flush out the reinforced cell with water. Board up the opening only after Engineer's inspection and approval.

I. Installation of all masonry accessories shall be in strict accordance with manufacturer's recommendations for the particular product. In the event that no specific installation instructions are provided by the manufacturer, accepted industry standard shall be adhered to.

3.07 INSULATION

A. Install foamed-in-place insulation in ungrouted cells of masonry units where shown and/or noted on the drawings.

B. The foamed-in-place insulation shall be pressure injected through a series of 5/8-inch to 7/8-inch holes drilled into every vertical column of block cells beginning at an approximate height of four feet from the finished floor level. Holes shall be patched with mortar and scored to resemble existing surface.

C. Foamed-in-place insulation shall be placed prior to installation of interior finish work, after all masonry and structural concrete work is in place, and once moisture content of in-place CMU is acceptable to the manufacturer. Installation shall comply with manufacturer’s instructions.

D. Remove excess materials and debris promptly. Remove mortar drippings from masonry and adjacent work before final set.

E. All holes and openings in the wall through which insulation can escape shall be permanently sealed or caulked prior to installation of the insulation. Copper, galvanized steel, or fiber glass screening shall be used in all weep holes.

3.08 BUILT-IN WORK

A. Furnish and install all anchor bolts, access doors and frames, and all metal work to be built into masonry which is not specified to be furnished under any other heading of the Specifications.

B. The masonry Contractor shall thoroughly familiarize himself with all the requirements of the structural steel and reinforced concrete work and specifications, and he must make his own work conform to the requirements therein illustrated or described. He shall build in all the structural steel and miscellaneous iron work of every description.

C. Thoroughly tie in all anchors and secure masonry work to the concrete work in a careful manner. All pockets and openings must be filled solidly with mortar so as to leave no air space or pockets to collect moisture. No iron work shall be covered or built-in unless thoroughly painted by the Contractor setting it.

D. The masonry Contractor shall build-in items furnished by others.

E. The masonry Contractor shall coordinate his work with mechanical and electrical trades in order to accommodate all built-in pipes and conduits.

3.09 LINTELS

A. Furnish and install precast reinforced concrete lintel at all openings in masonry walls not having poured lintel or tie beam at top. Provide 8" minimum bearing either side of opening. Bottom flange of precast lintels shall be pre-cut at bearing to allow passage of reinforcing and grout.

3.10 CLEANING AND POINTING

A. All masonry to be left exposed shall be cleaned thoroughly with 5 percent muriatic acid solution using stiff brush and rinse thoroughly with clear water.

B. Point all holes and chipped areas in exposed masonry. Cut out defective joints and tuck pointed solidly with like mortar.

C. Remove all loose and excess mortar prior to cleaning.

3.11 PARGING

A. Parge masonry walls where shown or indicated on the drawings in two uniform costs of mortar. Maintain 3/4-inch total thickness.

B. Dampen masonry walls prior to application.

C. Scarify base coat to ensure full bond to subsequent coat.

D. Steel trowel surface smooth and flat.

- END OF SECTION -

SECTION 08710

DOOR HARDWARE

PART 1 GENERAL

1.01 SUMMARY

A. Section includes: Door hardware.

B. Related sections:
1. The Contract Documents are complementary; what is called for by one is as binding as if called for by all.
2. It is the Contractor's responsibility for scheduling and coordinating the Work of subcontractors, suppliers, and other individuals or entities performing or furnishing any of Contractor's Work.
3. The following Sections are related to the Work described in this Section. This list of Related Sections is provided for convenience only and is not intended to excuse or otherwise diminish the duty of the Contractor to see that the completed Work complies accurately with the Contract Documents.
   a. Section 08110 - Hollow Metal Doors and Frames.

1.02 REFERENCES

A. ASTM International (ASTM):
1. E 90 - Standard Test Method for Laboratory Measurement of Airborne Sound Transmission Loss of Building Partitions and Elements.
2. E 283 - Standard Test Method for Determining the Rate of Air Leakage Through Exterior Windows, Curtain Walls, and Doors Under Specified Pressure Differences Across the Specimen.

B. Builders Hardware Manufacturers Association (BHMA):
1. A156.7 - Template Hinge Dimensions.
2. A156.18 - Materials and Finishes.

C. Underwriters Laboratories, Inc.

1.03 SUBMITTALS

A. Product Data.

B. Hardware schedule: Include references to Engineer's hardware group number, door type designations, locations, other pertinent data, and manufacturer names or suitable abbreviation opposite items scheduled.

C. Keying Schedule: Include list giving key code and numbers of doors which can be opened by each key.

D. Samples: Include for each different type and manufacturer for review of finish.

E. Construction key distribution list: Submit upon Owner's request.

F. Templates:
   1. Furnish hardware templates to fabricators of doors, frames, and other work to be factory-prepared for hardware.
   2. Check shop drawings of other work to confirm that adequate hardware backing is available.

G. Project record documents: Include corrected hardware schedule.

1.04 REGULATORY REQUIREMENTS

A. Provide hardware for fire-resistive rated openings that complies with UL and listed by UL.

1.05 DELIVERY, STORAGE, AND HANDLING

A. Deliver hardware where directed in unopened packages with items packed separately, complete and ready for installation with necessary fittings, trim, fasteners, and accessories.

B. Provide packages bearing the manufacturers' labels with each item or group of items identified according to the accepted hardware schedule.

1.06 MAINTENANCE

A. Require lockset manufacturers to deliver removable cylinder cores and minimum 2 extractor keys to Owner directly.

1.07 SCHEDULING AND SEQUENCING

A. Upon receipt of accepted hardware schedule, coordinate accepted hardware schedule, templates, reinforcing units, and template instructions to door and frame sections.

B. Restrict distribution of construction keys to superintendents and foremen. Maintain record of persons who have received keys on construction distribution list.

PART 2 PRODUCTS

2.01 FASTENERS

A. Types:
   1. To concrete, marble, or masonry: Machine screws and flush shells.
   2. To wood: Wood screws.
   3. On gypsum board or plaster: Screws of sufficient length to provide solid connection to framing or backing behind gypsum board or plaster.
   4. To mineral and hollow core doors: Sex bolts.
   5. Of exit devices to doors: Thru-bolts, unless otherwise specified.

B. Screws, exposed: Phillips-head type, full-threaded screws, not combination type.

C. Sizes: Suitable for heavy use.

D. Finish: Stainless steel, unless otherwise required to match material and hardware finish.

2.02 HINGES

A. Manufacturers: One of the following or equal:
   1. Stanley.
   2. Hager.
   3. McKinney.
   4. Ives.

B. Material:
   1. Interior fire resistive rated doors: Steel.
   2. Interior doors in corrosive environments: Stainless steel.
   3. Interior office doors: Brass.
   4. Interior doors in operation areas: Brass.
   5. Exterior doors: Stainless steel.

C. Knuckles, number of: Minimum 5.

D. Ball bearings: Concealed with interior self-lubricating bushings.

E. Type for doors with closers: Ball bearing.

F. Material for fire-resistive rated doors: Steel.

G. Pins for interior doors: Non-rising.

H. Pins for exterior doors: Non-removable.

I. Template hinges: BHMA A156.7.

J. Tips: Flat button.

K. Height: As follows, unless otherwise specified:
   1. Doors 1-3/8-inch thick: 3-1/2 inches.
   2. Doors 1-3/4-inch thick and up to 41 inches wide: 4-1/2 inches.
   3. Doors 1-3/4-inch thick and from 41 to 48 inches wide: 4-1/2 inches, extra heavy.
   4. Doors 2 inches thick or over 48 inches wide: 5 inches, extra heavy.

L. Widths: Sufficient to clear trim projection when door swings 180 degrees, unless otherwise specified.

M. Number per door leaf: As follows, unless otherwise specified:
   1. 3 hinges on door to 7 feet, 6 inches in height.
   2. 1 additional hinge for each additional 2 feet, 6 inches of height or fraction thereof.

2.03 LOCKSETS

A. Manufacturers typical: One of the following or equal:
   1. Schlage ND Series Rhodes design with removable core cylinders and stainless steel finish. Cylinders to be by Cyberlock Part No. CL-6P1.
   2. Yale 4700 (LN) Series Augusta design with removable core cylinders and stainless steel finish. Cylinders to be by Cyberlock Part No. CL-6P2.

B. Cylinders:
   1. Number of pins: Minimum 6.
   2. Cases: Steel, cylindrical.
   3. Interior parts: Non-corrosive with non-plastic, non-die-cast, non-aluminum mechanisms.
   4. Accessibility to key-in-knob type cylinders: Not requiring removal of lockset from door.
   5. Plugs: Extruded brass bar material fully round without flattened areas.
   6. Cores: Removable by Cyberlock.

C. Strikes:
   1. Material: Same as lock trim.
   2. Lock and latch boxes: Wrought.
   3. Lips: Extended, able to protect trim from marring by latch bolt.
   4. Cutouts at metal frames: In accordance with ANSI, unless otherwise specified.

D. Levers: Type that returns to within 1/2 inch of door.

E. Backset: 2-3/4 inches.

F. Trim materials: As follows, unless otherwise specified:
   1. Typical: Stainless steel.
   2. Corrosive environments: Stainless steel.

2.04 CONSTRUCTION KEYING

A. Type: Removable core system.

2.05 PERMANENT KEYING AND KEYS

A. Keying schedule:
   1. Key and master key door locks as directed by Owner. Submit Key Schedule for approval by Owner.

B. Number of keys:
   1. Grand master keys: 4.
   2. Keyed alike: 8 keys for each keyed alike group furnished.
   3. Keyed different: 2.

C. Identification:
   1. Emboss face of each cylinder plug and key with minimum 3-digit visual key control system.
   2. Emboss DO NOT DUPLICATE on keys.

2.06 PUSH/PULL PLATES

A. Manufacturers: One of the following or equal:
   1. Ives.
   2. Trimco.
   3. Rockwood.

B. Pulls:
   1. Material: As scheduled.
   2. Size: Minimum 8 inches center to center, minimum grip diameter of 3/4 inch, minimum projection of 2-1/4 inch.

C. Pull plates:
   1. Material: As scheduled.
   2. Plate size: Minimum 3 by 12 inches by 0.050-inch thick, with beveled edges on 4 sides with pull.
   3. Pull size: Minimum 8 inches center to center, minimum grip diameter of 3/4 inch, minimum projection of 2-1/4 inch.

D. Push plates:
   1. Material: As scheduled.
   2. Size: Minimum 3 by 12 inches by 0.050-inch thick, with beveled edges on 4 sides.

2.07 CLOSERS

A. Manufacturers:
   1. Features:
      a. Heavy-duty.
      b. Non-handed and non-sized.
      c. Adjustable spring power from size 1 through 4.
   2. One of the following or equal:
      a. Sargent, 351 Series.
      b. LCN, Super Smoothee Model 4041 Series.
      c. Norton Door Controls, Multi-Size Door Closers Model 7500BF Series.

B. Type: Full rack and pinion type with steel spring and non-gumming, non-freezing hydraulic fluid.

C. Controls: Separate set for regulating sweep speed, latch speed, backcheck and backcheck positioning, or where schedules, spring power.

D. Sizes: As recommended by accepted manufacturer.

E. Covers: Metal, capable of receiving finishes to match adjacent hardware finishes, unless otherwise specified.

F. Narrow frame provisions: Drop plates.

G. Effort to operate: As follows:
   1. Exterior: Maximum 8-1/2 pounds.
   2. Interior: Maximum 5 pounds.
   3. Fire-resistive rated doors: Maximum 15 pounds.

H. Adjust closers in accordance with manufacturer's directions for size of door.

2.08 EXIT DEVICES

A. General: All devices and mullions shall be of one manufacturer to provide for proper installation and servicing. Devices shall be furnished non handed and capable of direct field conversion for all available trim functions. All devices shall carry a three year warranty against manufacturing defects and workmanship. Exit device(s) being submitted for approval shall have been manufactured for at least 10 years. A list of 10-year-old projects using submitted exit device shall be available upon request:
   1. Furnish maintenance kit VonDuprin #050046 to Owner at closeout of project.
   2. Furnish mullion stabilizer similar to Von Duprin #154 for all mullions.
   3. Furnish cylinders for all locking function exit devices.
   4. Exit device shall be tested to ANSI/BHMA A156.3 test requirements by a BHMA certified independent testing laboratory. A written certification showing successful completion of a minimum of 1,000,000 cycles for surface and concealed vertical rod devices; 5,000,000 cycles for rim devices; and 10,000,000 cycles for mortise devices.
   5. Furnish Von Duprin exit devices with integrated exit monitor switch as required.

B. Surface-mounted/Concealed Vertical Rod Exit Devices:
   1. Devices shall be push through type touch pad design with a straight or horizontal motion to eliminate pinch points. The angular motion type pad with end cavity exposed when depressed is unacceptable. Latch bolt shall have a self-lubricating coating which reduces friction and wear. Plated latch bolts are unacceptable. Device housing shall be heavy duty extruded aluminum
   2. Mechanism Case or Housing: Shall have an average minimum thickness of (.140-in.) EXTRUDED aluminum, and shall have the adaptability to convert from standard hex key dogging to a high security cylinder dog operation in the field.
   3. No exposed screws shall be seen from the back side (pull side) of the device through a glass lite.
      a. The use of plastic parts to retract the latchbolt is unacceptable.
   4. Springs: Only minimum (1/16-in.) diameter compression springs are acceptable. All internal parts shall be zinc dichromate coated to prevent rusting.
   5. Quiet Feature: All devices shall incorporate a hydraulic sound damper to which decelerates the touchpad on its return stroke and eliminates noise associated with exit device operation.
   6. Touch Pad: Shall be architectural metal with a minimum height of 2-3/16-in. Plastic is not acceptable.
   7. Outside Trim: Shall be heavy duty type and fastened by means of concealed welded lugs and thru bolts from the inside. Lever trim shall be forged brass with a minimum average thickness on the escutcheon of (.130-in.). Plate with pull shall be minimum average thickness of (.090-in.) and have forged pulls. Lever trim shall be furnished with “Break-Away Levers” (994L Trim).
   8. End caps shall be sloped and of heavy-duty metal alloy construction and provide horizontal adjustment to provide flush alignment with device cover plate. When device end cap is installed, no raised edges will protrude. End cap shall be cast metal or forged aluminum and have a minimum thickness of (.250-in.). Plastic or metal stamping will not be acceptable.

9. All devices with US28 finish to have stainless steel touch bars with US26D trim.
10. All floor strikes on interior vertical rod panic devices to be similar to Von Duprin 385A.
11. Provide all shim kits and filler plates to allow flush mounting of exit devices on all types of doors used in this Project.
12. Furnish all exit devices with deadlocking latchbolts.
13. Surface Vertical Rod Series Exit Device shall be tested to ANSI/BHMA A156.3 test requirements by a BHMA certified independent testing laboratory; a written certification showing successful completion of a minimum of 5,000,000 cycles must be provided by the independent laboratory. Rim Series Exit Device shall be tested to ANSI/BHMA A156.3 test requirements by a BHMA certified independent testing laboratory; a written certification showing successful completion of a minimum of 5,000,000 cycles must be provided by the independent laboratory. Mortise Series Exit Device shall be tested to ANSI/BHMA A156.3 test requirements by a BHMA certified independent testing laboratory; a written certification showing successful completion of a minimum of 10,000,000 cycles must be provided by the independent laboratory. Concealed Vertical Rod Series Exit Device shall be tested to ANSI/BHMA A156.3 test requirements by a BHMA certified independent testing laboratory; a written certification showing successful completion of a minimum of 1,000,000 cycles must be provided by the independent laboratory.

C. Acceptable Manufacturers: Subject to compliance with requirements, provide exit device products of the following manufacturers:
   1. Von Duprin – No substitution.
   2. Von Duprin – Coordinated with exit devices with integrated exit monitor switches.

2.09 MISCELLANEOUS DOOR HARDWARE

A. Wall stops: As scheduled.
   1. Manufacturers: One of the following or equal:
      a. Ives.
      b. Trimco.
      c. Rockwood.

B. Floor stops: As scheduled with strike of suitable height to compensate for clearance between door and floor:
   1. Manufacturers: One of the following or equal:
      a. Ives.
      b. Trimco.
      c. Rockwood.

C. Mechanical holders: Foot-operated plunger with instant release by touch of toe and integral spring to keep constant shoe pressure against floor; brass:
   1. Manufacturers: The following or equal:
      a. Glynn-Johnson.

D. Electromagnetic holders: Electromagnetic hold open device; able to be connected to smoke alarm system; UL BMA listed; consisting of completely flush wall-mounted electro-magnetic holder and door thru-bolted contact plate; depth as required; with

minimum holding force of 25 and maximum of 40 pounds; voltage and mounting height as indicated on the Drawings; steel:

1. Manufacturers: One of the following or equal:
   a. Rixson-Firemark Inc., Electromagnetic Door Release Model 990 Series.
   b. LCN Electromagnetic Door Release Model SEM 7800 Series.
   c. Dorma Door Controls Inc., Electromagnetic Door Holder Model Series EM.

E. Automatic flush bolts: Mortise, bar with stop-mounted coordinator and strikes; materials as scheduled:
   1. Manufacturers: One of the following or equal:
      a. Glynn-Johnson.
      b. Hager Hinge Co.

F. Kick plates: As scheduled, 0.050-inch thick, beveled edges, 10 inches high, 1-1/2 inches narrower than single doors, 1 inch narrower than leaf of door pairs.
   1. Manufacturers: One of the following or equal:
      a. Ives.
      b. Trimco.

G. Gasketing systems: As scheduled, self-adhesive silicone seal, continuous at head and jambs, rated for fire and smoke in accordance with ASTM E 283, sound rated in accordance with ASTM E 90:
   1. Manufacturers: One of the following or equal:
      a. Pemko Mfg. Co.
      b. National Guard Products Inc.
      c. Reese.

H. Weatherstripping for exterior doors and smoke, light, and sound seals for interior doors.

I. Thresholds: As scheduled, extruded aluminum, maximum 1/2-inch high, maximum slope of 1 foot in 2 feet:
   1. Manufacturers: One of the following or equal:
      a. National Guard Products Inc.
      b. Pemko Mfg. Co.

J. Dustproof strike: As scheduled:
   1. Manufacturers: One of the following or equal:
      a. Ives.
      b. Trimco.

K. Coordinator with filler bar: As scheduled, non-handed, series type length as required for door sizes indicated, complete with filer lengths as required, with mounting brackets and carry bars when required for proper operation; steel with manufacturer's standard prime finish capable of receiving painted finish.
   1. Manufacturers: One of the following or equal:
      a. Glynn-Johnson Coordinators, Model COR Series.
      b. Ives, Door Co-Ordinator, Model 900 Series.

L. Door bottoms: As scheduled, extruded aluminum with vinyl insert, surface mounted, length equal to door width minus 2 inches, automatic, recessed in bottom of door:
   1. Manufacturers: One of the following or equal:

a. Pemko.
b. Reese.

M. Astragals: As specified in Sections 08110.

N. Silencers: As scheduled, pneumatic gray rubber.
1. Manufacturers: One of the following or equal:
a. Trimco.
b. Ives.
c. Rockwood.

2.10 FINISHES

A. Brass and bronze: BHMA A156.18 626 (US26D), satin chrome.

B. Steel: BHMA A156.18 652 (US26D), satin chrome.

C. Stainless steel: BHMA A156.18 630 (US32D), satin stainless steel.

D. Aluminum: BHMA A156.18 628 (US28).

E. Plastic closer covers: Spray paint to match typical door hardware finish.

F. Metal closer covers: Plate covers to match typical door hardware finish.

G. Electromagnetic hold open devices: Manufacturer's standard brushed zinc finish.

PART 3 EXECUTION

3.01 EXAMINATION

A. Inspect doors and door frames for damage or defects and examine hardware for compatibility with receiving conditions and suitable to intended use.

B. Verify that required wall backing has been installed.

3.02 INSTALLATION

A. Install finish hardware in accordance with manufacturer's templates and instructions.

B. Accurately and properly fit hardware.

C. Securely fasten fixed parts for smooth, trouble-free, non-binding operation.

D. Fit faces of mortise parts snug and flush.

E. Ensure that operating parts move freely and smoothly without binding, sticking, or excessive clearance.

F. Protection:
   1. Protect door hardware from damage or marring of finish during construction, use strippable coatings, removable tapes, or other acceptable means.
   2. Ensure door hardware displays no evidence of finish paint after final building cleanup.

G. Latch guard and dead bolts: Install so that bolts automatically engage in keeper, whether activated by closer or by manual pressure.

H. Closers:
   1. Mount on opposite sides of corridors or vestibules, except at exterior doors.
   2. Mount for 180-degree swing wherever possible.
   3. Mount with drop plates at narrow top rail doors.
   4. Adjust to operate noiselessly and evenly.
   5. Have closer manufacturer regulate closers prior to final acceptance of project.

I. Kick plates: Screw on push side of doors, unless otherwise indicated on the Drawings.

J. Gasketing: Mount to provide complete contact between door and frame, finished floor, or both; and weathertight enclosure.

K. Thresholds:
   1. Install immediately before inspection for final acceptance or protect from heavy traffic damage during construction.
   2. Cope to fit door frame profile and drill to suit required flush bolts and panic bolts.
   3. Unless indicated on the Drawings to be set in grout, set in double bead of sealant, tightly fit at jambs, and make waterproof.
   4. Fasten to concrete slab with 5/16-inch stainless steel flat head countersunk machine screws and concrete anchors at 8-inch centers.

L. Silencers: Insert into predrilled holes in frames.

3.03 CONSTRUCTION KEYING

A. Insert construction inserts in cylinder cores of exterior doors, and doors requiring security and access for workman, unless otherwise directed by the Engineer.

3.04 ADJUSTING

A. Examine hardware in place for complete and proper installation. Lubricate bearing surfaces for proper function.

B. Replace, rework, or otherwise correct defective door hardware, including incorrect hand or function.

3.05 CLEANING

A. Remove protective materials and devices and thoroughly clean exposed surfaces of hardware.

B. Check for surface damage prior to final cleaning for acceptance of project.

3.06 PERMANENT KEYING

A. Remove construction key inserts with extractor key. Insert permanent cylinders with cores.

B. Inspect each lockset to ensure permanent cylinders with cores are operating satisfactorily.

C. Test keys for proper conformance with keying system.

3.07 HARDWARE SCHEDULE

HARDWARE GROUP HW-1 (EXTERIOR)		
Hinges	3	Ives, 5BB1, 5 x 4-1/2, US32D
Closer	1	LCN 4041 EDA x TB
Threshold	1	Pemko, 170 A
Weatherstrip	1 Set	Pemko, 303 AS
Stop	1	Ives, 402, US26D
Door Bottom	1	Pemko, 222 AV
Kick Plate	1	Ives, 8400, 8 x 34, US32D
Lockset	1	Schlage, ND53 RHO RD 626
Exit Device	1	Von Duprin, 98 LUS32D

HARDWARE GROUP HW-2 (INTERIOR)		
Hinges	3	Ives, 5BB1, 4-1/2 x 4-1/2, US26D
Closer	2	LCN 4041 EDA TB
Threshold	1	Pemko, 170 A
Silencer	3	Ives SR64
Stop	1	Ives, 407, US26D
Kick Plate	1	Ives, 8400, 8 x 34, US32D
Lockset	1	Schlage, ND10S RHO
Exit Device	1	Von Duprin, 98 LUS32D

HARDWARE GROUP HW-3 (EXTERIOR DOUBLE DOOR)		
Hinges	6	Ives, 5BB1, 4-1/2 x 4-1/2, US32D
Closer	2	LCN 4041 EDA TB
Threshold	1	Pemko, 170 A
Weatherstrip	1 Set	Pemko, 303 AS
Stop	2	Ives, FS444, US26D
Door Bottom	2	Pemko, 222 AV
Kick Plate	2	Ives, 8400, 8 x 34, US32D
Flush Bolts	1 Set	Ives, FB457, US26D
Lockset	1	Schlage, ND53 RHO RD 626
Exit Device	2	Von Duprin, 98 LUS32D

HARDWARE GROUP HW-4 (INTERIOR DOUBLE DOOR)		
Hinges	6	Ives, 5BB1, 4-1/2 x 4-1/2, US32D
Closer	2	LCN 4041 EDA TB
Threshold	1	Pemko, 170 A
Silencer	3	Ives SR64
Stop	2	Ives, FS444, US26D
Kick Plate	2	Ives, 8400, 8 x 34, US32D
Flush Bolts	1 Set	Ives, FB457, US26D
Lockset	1	Schlage, ND53 RHO RD 626
Exit Device	2	Von Duprin, 98 LUS32D

END OF SECTION

SECTION 16010

BASIC ELECTRICAL REQUIREMENTS

PART 1 -- GENERAL

1.01 RELATED SECTIONS

A. Requirements specified within this section apply to all sections in Division 16, ELECTRICAL. Work specified herein shall be performed as if specified in the individual sections.

1.02 DESIGN REQUIREMENTS

A. All electronic boards as part of electrical equipment shall meet the atmospheric conditions of the space the equipment is installed in. All electronic boards which are not installed in a conditioned environment shall be fungus-resistant.

B. All electrical equipment shall be rated for the conditions the equipment is installed in.

1.03 STANDARDS, CODES, PERMITS, AND REGULATIONS

A. Perform all work; furnish and install all materials and equipment in full accordance with the latest applicable rules, regulations, requirements, and specifications of the following:

1. Local Laws and Ordinances.
2. State and Federal Laws.
3. National Electrical Code (NEC).
4. State Fire Marshal.
5. Underwriters' Laboratories (UL).
6. National Electrical Safety Code (NESC).
7. American National Standards Institute (ANSI).
8. National Electrical Manufacturer's Association (NEMA).
9. National Electrical Contractor's Association (NECA) Standard of Installation.
10. Institute of Electrical and Electronics Engineers (IEEE).
11. Insulated Cable Engineers Association (ICEA).
12. Occupational Safety and Health Act (OSHA).

13. National Electrical Testing Association (NETA).

14. American Society for Testing and Materials (ASTM).

15. Florida Building Code, including Broward County amendments.

B. Conflicts, if any, which may exist between the above items, will be resolved at the discretion of the Engineer.

C. Wherever the requirements of the Specifications or Drawings exceed those of the above items, the requirements of the Specifications or Drawings govern. Code compliance is mandatory. Construe nothing in the Contract Documents as permitting work not in compliance with these codes.

D. Obtain all permits and pay all fees required by any governmental agency having jurisdiction over the work. Arrange all inspections required by these agencies. On completion of the work, furnish satisfactory evidence to the Engineer that the work is acceptable to the regulatory authorities having jurisdiction.

1.04 ELECTRICAL COORDINATION

A. Work Provided Under this Contract:

1. Contractor shall provide and install a new Automatic Transfer Switch (ATS) and associated conduits and wiring.

2. Contractor shall provide and install grounding, mounting supports, junction boxes, wireway, manhole, Aluminum working platform and miscellaneous electrical.

3. Contractor shall coordinate with FPL for electrical service disconnect and re-connect.

B. Temporary Power:

1. Provide temporary power for the existing storm station to operate a minimum of one pump at all time during electrical upgrade and modification.

C. Emergency Power:

1. Contractor shall provide and install one emergency generator system including outdoor enclosure with generator breaker and generator support systems, as indicated on the drawings, complete in place as per specification 16620.

1.05 SUBMITTALS

A. Quality Control Submittals:

1. Voltage Field Test Results.

2. Voltage Balance Report.

3. Equipment Line Current Report.

4. Factory test certification and reports for all major electrical equipment.

5. Site test certification and reports as specified in other Division 16, ELECTRICAL sections.

B. The following information shall be provided for all electrical equipment:

1. A copy of each specification section, with addendum updates included, and all referenced and applicable sections, with addendum updates included, with each paragraph check-marked to indicate specification compliance or marked to indicate requested deviations from specification requirements. Check-marks (√) shall denote full compliance with a paragraph as a whole. If deviations from the specifications are indicated, and therefore requested by the Contractor, each deviation shall be underlined and denoted by a number in the margin to the right of the identified paragraph. The remaining portions of the paragraph not underlined shall signify compliance on the part of the Contractor with the specifications. The submittal shall be accompanied by a detailed, written justification for each deviation.

2. Electrical equipment submittals shall be made by specification section. Submit one package per specification section and do not group multiple specification sections under one submittal package.

1.06 ENVIRONMENTAL CONDITIONS

A. All chemical rooms and areas shall be designated as corrosive.

B. All indoor chemical and process equipment areas shall be considered wet locations.

C. Electrical equipment in rooms or areas designated as Classified by NFPA 70 (national electrical code) as Division 1 or Division 2 shall meet all requirements set forth for that classification as described in NEC article 500.

1.07 INSPECTION OF THE SITE AND EXISTING CONDITIONS

A. The Electrical Drawings were developed from past record drawings and information supplied by the Owner. Verify all scaled dimensions prior to submitting bids.

B. Before submitting a bid, visit the site and determine conditions at the site and at all existing structures in order to become familiar with all existing conditions and electrical system which will, in any way or manner, affect the work required under this Contract. No subsequent increase in Contract cost will be allowed for additional work required because of the Contractor's failure to fulfill this requirement.

C. Submit a request for shut down to the Owner for 5 working days in advance and for review and approval. Carry out any work involving the shutdown of the existing services to any piece of equipment now functioning in existing areas at such time as to provide the

least amount of inconvenience to the Owner. Do such work when directed by the Engineer.

D. After award of Contract, locate all existing underground utilities at each area of construction activity. Protect all existing underground utilities during construction. Pay for all required repairs without increase in Contract cost, should damage to underground utilities occur during construction.

1.08 RESPONSIBILITY

A. The Contractor shall be responsible for:

1. Complete systems in accordance with the intent of these Contract Documents.

2. Coordinating the details of facility equipment and construction for all Specification Divisions which affect the work covered under Division 16, ELECTRICAL.

3. Furnishing and installing all incidental items not actually shown or specified, but which are required by good practice to provide complete functional systems.

1.09 INTENT OF DRAWINGS

A. Electrical plan Drawings show only general location of equipment, devices, and raceway, unless specifically dimensioned. The Contractor shall be responsible for the proper routing of raceway, subject to the approval of the Engineer.

B. All electrical equipment sizes and characteristics have been based on manufacturer Cutler-Hammer. If the Contractor chooses to and is allowed to substitute, the Contractor shall be responsible for fitting all the equipment in the available space as shown on the Drawings.

PART 2 -- PRODUCTS

2.01 GENERAL

A. Provide materials and equipment listed by UL wherever standards have been established by that agency.

B. Equipment Finish:

1. Provide manufacturers' standard finish and color, except where specific color is indicated.

2. If manufacturer has no standard color, provide equipment with ANSI No. 61, light gray color.

PART 3 -- EXECUTION

3.01 GENERAL

A. Electrical Drawings show general locations of equipment, devices, and raceway, unless specifically dimensioned.

B. Install work in accordance with NECA Standard of Installation, unless otherwise specified.

3.02 LOAD BALANCE

A. Drawings and Specifications indicate circuiting to electrical loads and distribution equipment.

B. Balance electrical load between phases as nearly as possible on switchboards, panel boards, motor control centers, and other equipment where balancing is required.

C. When loads must be reconnected to different circuits to balance phase loads, maintain accurate record of changes made, and provide circuit directory that lists final circuit arrangement.

3.03 CHECKOUT AND STARTUP

A. Voltage Field Test:

1. Check voltage at point of termination of power company supply system to project when installation is essentially complete and is in operation.

2. Check voltage amplitude and balance between phases for loaded and unloaded conditions.

   a. Submit Voltage Field Test Report within 5 days of test.

B. Equipment Line Current Tests:

1. Check line current in each phase for each piece of equipment.

2. Make line current check after equipment start up and is in service.

3. If any phase current for any piece of equipment is above rated nameplate current, prepare Equipment Line Phase Current Report that identifies cause of problem and corrective action taken.

C. Startup:

1. Demonstrate satisfactory operation of all electrical equipment. Participate with other trades in all startup activities.

END OF SECTION

SECTION 16110

RACEWAYS

PART 1 - GENERAL

1.01 REFERENCES

A. The following is a list of standards which may be referenced in this Section:

1. American Association of State Highway and Transportation Officials (AASHTO): Division I, Standard Specifications for Highway Bridges, Fourteenth Edition.

2. American National Standards Institute (ANSI):
   a. C80.1, Rigid Steel Conduit-Zinc Coated.
   b. C80.3, Electrical Metallic Tubing-Zinc Coated.
   c. CS0.5, Rigid Aluminum Conduit.
   d. C80.6, Intermediate Metal Conduit (IMC)-Zinc Coated.

3. American Society for Testing and Materials (ASTM):
   a. A123 El, Standard Specification for Zinc-Coated (Galvanized) Coatings on Iron and Steel Products.
   b. C857, Standard Practice for Minimum Structural Design Loading for Underground Precast Concrete Utility Structures.

4. National Electrical Contractor's Association, Inc. (NECA): 5055, Standard of Installation.

5. National Electrical Manufacturers Association (NEMA):
   a. RN 1, Polyvinyl-Chloride (PVC) Externally Coated Galvanized Rigid Steel Conduit and Intermediate Metal Conduit.
   b. TC 2, Electrical Plastic Tubing (EPT) and Conduit (EPC-40 and EPC-80).
   c. TC 3, PVC Fittings for Use with Rigid PVC Conduit and Tubing.
   d. TC 6, PVC and ABS Plastic Utilities Duct for Underground Installation.
   e. VE 1, Metallic Cable Tray Systems.

6. National Fire Protection Association (NFPA): 70, National Electrical Code. (NEC)

7. Underwriters Laboratories, Inc. (UL):
   a. 1, Standard for Safety Flexible Metal Conduit.
   b. 6, Standard for Safety Rigid Metal Conduit.
   c. 360, Standard for Safety Liquid-Tight Flexible Steel Conduit.
   d. 514B, Standard for Safety Fittings for Conduit and Outlet Boxes.
   e. 514C, Standard for Safety Nonmetallic Outlet Boxes, Flush-Device Boxes, and Covers.
   f. 651, Standard for Safety Schedule 40 and 80 PVC Conduit.
   g. 651A, Standard for Safety Type EB and Rigid PVC Conduit and HDPF Conduit.
   h. 797, Standard for Safety Electrical Metallic Tubing.

i. 870, Standard for Safety Wireways, Auxiliary Gutters, and Associated Fittings.
j. 1242, Standard for Safety Intermediate Metal Conduit.
k. 1660, Standard for Safety Liquid-Tight Flexible Nonmetallic Conduit.

1.02 SUBMITTALS

A. Shop Drawings:

1. Manufacturer's Literature:
   a. Rigid galvanized steel conduit.
   b. Electric metallic tubing.
   c. Rigid aluminum conduit.
   d. PVC Schedule 40 conduit.
   e. PVC-coated rigid galvanized steel conduit.
   f. Flexible metal, liquid-tight conduit.
   g. Flexible, nonmetallic, liquid-tight conduit.
   h. Conduit fittings.
   i. Wireways.
   j. Inner Duct

1.03 UL COMPLIANCE

A. Materials manufactured within scope of Underwriters Laboratories shall conform to UL Standards and have an applied UL listing mark.

PART 2 - PRODUCTS

2.01 CONDUIT AND TUBING

A. PVC Schedule 40 and 80 Conduit:

1. Meet requirements of NEMA TC 2 and UL 651.

2. UL listed for concrete encasement, underground direct burial, concealed or direct sunlight exposure, and 90 degrees C insulated conductors.

3. Have smooth Interior and grey color.

B. PVC-Coated Rigid Galvanized Steel Conduit: Not used

C. Rigid Aluminum Conduit:

1. General:
   a. Meet requirements of UL 514B.
   b. Type: Threaded, copper-free. Set screw fittings not permitted.

2. Insulated Bushing:
   a. Material: Cast aluminum, with integral insulated throat, rated for 150 degrees C.

b. Manufacturer: O.Z. Gedney; Type AB.

3. Grounding Bushing:
   a. Material: Cast aluminum with integral insulated throat, rated for 150 degrees, with solderless lugs.
   b. Manufacturer: O.Z. Gedney; Type ABLG.

4. Conduit Hub:
   a. Material: Cast aluminum, with insulated throat.
   b. Manufacturers:
      1) O.Z. Gedney; Type CHA.
      2) T & B; Series 370AL.

5. Conduit Bodies:
   a. Manufacturers (For Normal Conditions):
      1) Appleton; Form 85 threaded Unilets.
      2) Crouse-Hinds; Mark 9 or Form 7-SA threaded condulets.
      3) Killark; Series O Electrolets.
   b. Manufacturers (For Hazardous Locations):
      1) Appleton.
      2) Crouse-Hinds.
      3) Killark.

6. Couplings: As supplied by conduit manufacturer.

7. Conduit Sealing Fitting Manufacturers:
   a. Appleton; Type EYF-AL or EYM-AL.
   b. Crouse-Hinds; Type EYS-SA or EZS-SA.
   c. Killark; Type EY or EYS.

8. Drain Seal Manufacturers:
   a. Appleton; Type EYDM-A.
   b. Crouse-Hinds; Type EYD-SA or EZD-SA.
9. Drain/Breather Fitting Manufacturers:
   a. Appleton; Type ECDB.
   b. Crouse-Hinds; ECD.

10. Expansion Fitting Manufacturers:
    a. Deflection/Expansion Movement: Steel City; Type DF-A.
    b. Expansion Movement Only: Steel City; Type AF-A.

11. Cable Sealing Fittings: To form watertight nonslip cord or cable connection to conduit.
    a. Bushing: Neoprene at connector entry.
    b. Manufacturer: Appleton CG-S.

D. Flexible Metal, Liquid-Tight Conduit:

1. UL 360 listed for 105 degrees C insulated conductors.

2. Material: Galvanized steel, with an extruded PVC jacket.

E. Flexible, Nonmetallic, Liquid-Tight Conduit:

1. Material: PVC core with fused flexible PVC jacket.

2. UL 1660 listed for:
   a. Dry Conditions: 80 degrees C insulated conductors.
   b. Wet Conditions: 60 degrees C insulated conductors.

3. Manufacturers:
   a. Carlon; Carflex or X-Flex.
   b. T & B; Xtraflex LTC or EFC.

F. High Density Polyethylene Conduit (HDPE)

1. Meet requirements UL 651A.

2. UL listed for concrete encasement, underground direct burial, concealed or direct sunlight exposure, and 90 degrees C insulated conductors.

3. Have smooth Interior and grey color.

2.02 FITTINGS

A. PVC Conduit and Tubing:

1. Meet requirements of NEMA TC-3.

2. Type: PVC, slip-on.

B. PVC-Coated Rigid Galvanized Steel Conduit: Not Used

C. Flexible Metal, Liquid-Tight Conduit:

1. Metal insulated throat connectors with integral nylon or plastic bushing rated for 105 degrees Celsius.

2. Insulated throat and sealing O-rings.

3. Long design type extending outside of box or other device at least 2 inches.

4. Manufacturer: T & B; Series 5300.

D. Flexible, Nonmetallic, Liquid-Tight Conduit: Meet requirements of UL 514B.

1. Type: One-piece fitting body, complete with lock nut, O-ring, threaded ferrule, sealing ring, and compression nut.

2. Manufacturers:
   a. Carlon; Type LT.
   b. Kellems; Polytuff.
   c. T & B; LT Series.

E. Watertight Entrance Seal Device:

1. New Construction:
   a. Material: Oversized sleeve, malleable iron body with sealing ring, pressure ring, grommet seal, and pressure clamp.
   b. Manufacturer: O.Z./Gedney; Type FSK or WSK, as required.

2. Gored-Hole Application:
   a. Material: Assembled dual pressure disks, neoprene sealing ring, and membrane clamp.
   b. Manufacturer: O.Z./Gedney; Series CSM.

F. Hazardous Locations: Approved for use in the atmosphere involved.

1. Manufacturer: Crouse-Hinds; Type ECGJH.

G. Corrosive Locations:

1. Material: 40-mil PVC-coated rigid steel.
2. Manufacturers:
   a. Robroy Industries.
   b. Carlon.
   c. Crouse-Hinds.

2.03 WIREWAYS

A. Meet requirements of UL 870.

B. Type: Steel-enclosed, with removable, hinged cover.

C. Rating: Outdoor raintight if outdoor, and indoor if indoor.

D. Finish: Gray, baked enamel.

E. Manufacturers:

1. Square D.

2. B-Line Systems, Inc.

2.04 ACCESSORIES

A. Identification Devices:

1. Raceway Tags:
   a. Material: Permanent, nylon.
   b. Shape: Round.
   c. Raceway Designation: Pressure stamped, embossed, or engraved.
   d. Tags relying on adhesives or taped-on markers not permitted.

2. Warning Tape:
   a. Material: Polyethylene, 4-mil gauge.
   b. Color: Red.
   c. Width: Minimum 6-inch.
   d. Designation: Warning on tape that electric circuit is located below tape.
   e. Manufacturers:
      1) Blackburn, Type RT.
      2) Griffolyn Co.

3. Buried Raceway Marker:
   a. Material: Sheet bronze, consisting of double-ended arrows, straight for straight runs and bent at locations where runs change direction.
   b. Designation: Incise to depth of 3/32 inch, ELECTRIC CABLES. in letters 1/4-inch high.
   c. Minimum Dimension: 1/4-inch thick, 10 inches long, and 3/4-inch wide.

B. Raceway Coating:

1. Material: Bitumastic or plastic tape coating.

2. Manufacturers:
   a. Koppers bitumastic; No. 505.
   b. Scotchwrap; No. 51, plastic tape.

C. Wraparound Duct Band:

1. Material: Heat-shrinkable, cross-linked polyolefin, precoated with hot-melt adhesive.

2. Manufacturer: Raychem; Type TWDB.

D. Inner Duct:

1. Material: White Polyester and Nylon resin polymer, 2-inch 3-cell polyester/nylon textile inner duct containing 1250lb polyester flat woven pull tape.

2. Manufacturer: MaxCell Group/TVC Communications

2.05 PRECAST MANHOLES AND HANDHOLES

A. Concrete Strength: Minimum, 3,000 psi compressive, in 28 days.

B. Loading: AASHTO Division 1, H-20 in accordance with ASTM C857.

C. Access: Provide cast concrete 6- or 12-inch risers and access hole adapters between top of manhole and finished grade at required elevations.

D. Drainage:

1. Slope floors toward drain points, leaving no pockets or other non-draining areas.

2. Provide drainage outlet or sump at low point of floor constructed with a heavy, cast iron, slotted or perforated hinged cover, and 4-inch minimum outlet and outlet pipe.

E. Raceway Entrances:

1. Provide on all four sides.

2. For raceways to be installed under this Contract, provide knockout panels or precast individual raceway openings.

3. At entrances where raceways are to be installed by others, provide minimum 12-inch high by 24-inch wide knockout panels for future raceway installation.

F. Embedded Pulling Iron:

1. Material: 3/4-inch diameter stock, fastened to overall steel reinforcement before concrete is placed.

2. Location:
   a. Wall: Opposite each raceway entrance and knockout panel for future raceway entrance.
   b. Floor: Centered below manhole or handhole cover.

G. Cable Racks:

1. Arms and Insulators: Adjustable, of sufficient number to accommodate cables for each raceway entering or leaving manhole, including spares.

2. Wall Attachment:
   a. Adjustable inserts in concrete walls. Bolts or embedded studs not permitted.
   b. Insert Spacing: Maximum 3-foot on center entire inside perimeter of manhole.
   c. Arrange so that spare raceway ends are clear for future cable installation.

H. Manhole Frames and Covers:

1. Material: Machined cast iron.

2. Cover Dimensions: see plan.

3. Cover Type: Indented, solid top design, with two drop handles each.

4. Cover Loading: AASHTO Division I, H-20.

5. Cover Designation: Cast, on upper side, in integral letters, minimum 2 inches in height, appropriate titles:
   a. Above 600 Volts: ELECTRIC HV.
   b. 600 Volts and Below: ELECTRIC LV.

c. TELEPHONE.

I. Handhole Frames and Covers:

1. Material: Steel, hot-dipped galvanized.

2. Cover Type: Solid, bolt-on, of checkered design.

3. Cover Loading: H-20.

4. Cover Designation: Burn by welder, on upper side in integral letters, minimum 2 inches in height, appropriate titles:
   a. 600 Volts and Below: ELECTRIC LV.
   b. FIBER.

J. Hardware: Steel, hot-dip galvanized.

K. Furnish knockout for ground rod in each handhole and manhole.

L. Manufacturers:

1. U.S. Precast.
2. Brooks Products, Inc.
3. Penn-Cast Products, Inc.
4. Concrete Conduit Co.
5. Or approved equal.

PART 3 - EXECUTION

3.01 GENERAL

A. Conduit and Tubing sizes shown are based on the use of copper conductors.

B. All installed Work shall comply with NECA 5055.

C. Crushed or deformed raceways not permitted.

D. Maintain raceway entirely free of obstructions and moisture.

E. Immediately after installation, plug or cap raceway ends with watertight and dust-tight seals until time for pulling in conductors.

F. Aluminum Conduit: Do not install in direct contact with concrete. Apply two coats of bitumastic paint or heat shrink tubing to all aluminum conduits where contact with concrete floor slabs.

G. Sealing Fittings: Provide drain seal in vertical raceways where condensate may collect above sealing fitting.

H. Avoid moisture traps where possible. When unavoidable in exposed conduit runs, provide junction box and drain fitting at conduit low point.

I. Group raceways installed in same area.

J. Proximity to Heated Piping: Install raceways minimum 12 inches from parallel runs.

K. Follow structural surface contours when installing exposed raceways. Avoid obstruction of passageways.

L. Run exposed raceways parallel or perpendicular to walls, structural members, or intersections of vertical planes.

M. Block Walls: Do not install raceways in same horizontal course with reinforcing steel.

N. Install watertight fittings in outdoor, underground, or wet locations.

O. Paint threads, before assembly of fittings, of galvanized conduit with zinc-rich paint or liquid galvanizing compound.

P. All metal conduit to be reamed, burrs removed, and cleaned before installation of conductors, wires, or cables.

Q. Do not install raceways in concrete equipment pads, foundations, or beams.

R. Horizontal raceways installed under floor slabs shall lie completely under slab, with no part embedded within slab.

S. Install concealed, embedded, and buried raceways so that they emerge at right angles to surface and have no curved portion exposed.

3.02 INSTALLATION IN CAST-IN-PLACE STRUCTURAL CONCRETE

A. Minimum cover 1-1/2 inches, unless otherwise noted.

B. Provide support during placement of concrete to ensure raceways remain in position.

C. Floor Slabs:

1. Outside diameter of conduit not to exceed one-third of the slab thickness.

2. Separate conduit by minimum six times conduit outside diameter, except at crossings.

3.03 CONDUIT APPLICATION – POWER, SIGNAL, CONTROL AND FIBER

A. Diameter: Minimum 3/4 inch.

B. Exterior, Exposed:

1. Rigid Aluminum Conduit.

C. Interior, Exposed:

1. Rigid Aluminum Conduit.

D. Direct Earth Burial: – Schedule 40 PVC.

E. Direct Buried With Concrete Slab On Top – PVC Schedule 40.

F. Concrete-Encased Raceways – Schedule 40 PVC

G. Under Slabs-On-Grade – Schedule 40 PVC

H. Horizontal directional direction drilling conduits - HDPE

3.05 CONNECTIONS

A. For motors, wall or ceiling mounted fans and unit heaters, dry type transformers, electrically operated valves, instrumentation, and other equipment where flexible connection is required to minimize vibration:

1. Conduit Size 4 Inches or Less: Flexible metal, liquid-tight conduit.

2. Conduit Size Over 4 Inches: Nonflexible.

3. Corrosive Areas: Flexible, nonmetallic, liquid or PVC-coated metallic, liquid-tight.

4. Length: 18-inch minimum, 60-inch maximum, of sufficient length to allow movement or adjustment of equipment.

B. Lighting Fixtures in Dry Areas: Flexible steel, nonliquid-tight conduit.

C. Outdoor Areas, Process Areas Exposed to Moisture, and Areas Required to be Oiltight and Dust-Tight: Flexible metal, liquid-tight conduit.

D. Transition From Underground or Concrete Embedded to Exposed: Rigid Aluminum.

E. Under Equipment Mounting Pads – Schedule 40 PVC

F. Exterior Light Pole Foundations – Schedule 40 PVC

3.06 PENETRATIONS

A. Make at right angles, unless otherwise shown.

B. Notching or penetration of structural members, including footings and beams, not permitted.

C. Fire-Rated Walls, Floors, or Ceilings: Fire-stop openings around penetrations to maintain fire-resistance rating.

D. Apply single layer of wraparound duct band to all metallic conduit in contact with concrete floor slabs to a point 2 inches above concrete surface.

E. Concrete Walls, Floors, or Ceilings (Aboveground): Provide nonshrink grout dry-pack, or use watertight seal device.

F. Entering Structures:

1. General: Seal raceway at the first box or outlet with minimum 2 inches thick expandable plastic compound to prevent the entrance of gases or liquids from one area to another.

2. Concrete Roof or Membrane Waterproofed Wall or Floor:
   a. Provide a watertight seal.
   b. Without Concrete Encasement: Install watertight entrance seal device on each side.
   c. With Concrete Encasement: Install watertight entrance seal device on the accessible side.
   d. Securely anchor malleable iron body of watertight entrance seal device into construction with one or more integral flanges.
   e. Secure membrane waterproofing to watertight entrance seal device in a permanent, watertight manner.

3. Heating, Ventilating, and Air Conditioning Equipment:

   a. Penetrate equipment in area established by manufacturer.
   b. Terminate conduit with flexible metal conduit at junction box or condulet attached to exterior surface of equipment prior to penetrating equipment.
   c. Seal penetration with silicone type sealant as specified.

   4. Corrosive-Sensitive Areas:
   a. Seal all conduit passing through chlorine and ammonia room walls.
   b. Seal all conduit entering equipment panel boards and field panels containing electronic equipment.
   c. Seal penetration with silicone type sealant as specified.

5. Existing or Precast Wall (Underground): Core drill wall and install a watertight entrance seal device.

6. Nonwaterproofed Wall or Floor (Underground, without Concrete Encasement):
   a. Provide Schedule 40 galvanized pipe sleeve, or watertight entrance seal device.
   b. Fill space between raceway and sleeve with an expandable plastic compound on each side.

7. Manholes and Handholes:
   a. Metallic Raceways: Provide insulated grounding bushings.
   b. Nonmetallic Raceways: Provide bell ends flush with wall.
   c. Install such that raceways enter as near as possible to one end of wall, unless otherwise shown.

3.07 SUPPORT

A. Support from structural members only, at intervals not exceeding NFPA 70 requirements, and in any case not exceeding 10 feet. Do not support from piping, pipe supports, or other raceways.

B. Multiple Adjacent Raceways: Provide ceiling trapeze. For trapeze-supported conduit, allow 40 percent extra space for future conduit.

C. Provide and attach wall brackets, strap hangers, or ceiling trapeze as follows:

1. Wood: Wood screws.

2. Hollow Masonry Units: Toggle bolts.

3. Concrete or Brick: Expansion shields, or threaded studs driven in by powder charge, with lock washers and nuts.

4. Steelwork: Machine screws.

D. Nails or wooden plugs inserted in concrete or masonry for attaching raceway not permitted. Do not weld raceways or pipe straps to steel structures. Do not use wire in lieu of straps or hangers.

3.08 BENDS

A. Install concealed raceways with a minimum of bends in the shortest practical distance.

B. Make bends and offsets of longest practical radius.

C. Install with symmetrical bends or cast metal fittings.

D. Avoid field-made bends and offsets, but where necessary, make with acceptable hickey or bending machine. Do not heat metal raceways to facilitate bending.

E. Make bends in parallel or banked runs from same center or centerline with same radius so that bends are parallel.

F. Factory elbows may be installed in parallel or banked raceways if there is change in plane of run, and raceways are same size.

G. PVC Conduit:

1. Bends 30-Degree and Larger: Provide factory-made elbows.

2. 90-Degree Bends: Provide rigid steel elbows.

3. Use manufacturer's recommended method for forming smaller bends.

H. Flexible Conduit: Do not make bends that exceed allowable conductor bending radius of cable to be installed or that significantly restricts conduit flexibility.

3.09 EXPANSION/DEFLECTION FITTINGS

A. Provide on all raceways at all structural expansion joints, and in long tangential runs.

B. Provide expansion/deflection joints for 50 degrees Fahrenheit maximum temperature variation.

C. Install in accordance with manufacturer's instructions.

3.10 PVC CONDUIT

A. Solvent Welding:

1. Provide manufacturer recommended solvent; apply to all joints.

2. Install such that joint is watertight.

B. Adapters:

1. PVC to Metallic Fittings: PVC terminal type.

2. PVC to Rigid Metal Conduit or IMC: PVC female adapter.

C. Belied-End Conduit: Bevel the unbelled end of the joint prior to joining.

3.11 PVC-COATED RIGID STEEL CONDUIT

NOT USED

3.12 WIREWAYS

A. Install in accordance with manufacturer's instructions.

B. Locate with cover on accessible vertical face of wireway, unless otherwise shown.

3.13 TERMINATION AT ENCLOSURES

A. Cast Metal Enclosure: Provide manufacturer's premolded insulating sleeve inside metallic conduit terminating in threaded hubs.

B. Sheet Metal Boxes, Cabinets, and Enclosures:

1. Flexible Metal Conduit: Provide two screw type, insulated, malleable iron connectors.

2. Flexible, Nonmetallic Conduit: Provide nonmetallic, liquid-tight strain relief connectors.

3. PVC-Coated Rigid Galvanized Steel Conduit: Provide PVC-coated, liquid-tight, metallic connector.

4. PVC Schedule 40 Conduit: Provide PVC terminal adapter with lock nut.

C. Motor Control Center, Switchboard, Switchgear, and Free-Standing Enclosures: Terminate conduit entering bottom with grounding bushing; provide a grounding jumper extending to equipment ground bus or grounding pad.

3.15 UNDERGROUND RACEWAYS

A. Grade: Maintain minimum grade of 4 inches in 100 feet, either from one manhole, handhole, or pull box to the next, or from a high point between them, depending on surface contour.

B. Cover: Maintain minimum 2-foot cover above conduit and concrete encasement, unless otherwise shown.

C. Make routing changes as necessary to avoid obstructions or conflicts.

D. Couplings: In multiple conduit runs, stagger so that couplings in adjacent runs are not in same transverse line.

E. Union type fittings not permitted.

F. Spacers:

1. Provide preformed, nonmetallic spacers, designed for such purpose, to secure and separate parallel conduit runs in a trench or concrete encasement.

2. Install at intervals not greater than that specified in NFPA 70 for support of the type conduit used, but in no case greater than 10 feet.

G. Support conduit so as to prevent bending or displacement during backfilling or concrete placement.

H. Installation with Other Piping Systems:

1. Crossings: Maintain minimum 12-inch vertical separation.

2. Parallel Runs: Maintain minimum 12-inch separation.

3. Installation over valves or couplings not permitted.

I. Metallic Raceway Coating: At couplings and joints, apply wraparound duct band with one-half tape width overlap to obtain two complete layers.

J. Concrete Encasement: As specified in Cast-In-Place Concrete.

1. Concrete Color: Gray, dust top of concrete ductbank with powdered red concrete dye before concrete sets and trowel dry onto top of ductbank.

K. Backfill:

1. As specified in Civil Section.

2. Do not backfill until inspected by Engineer.

3.16 EMPTY RACEWAYS

A. Provide permanent, removable cap over each end.

B. Provide PVC plug with pull tab for underground raceways with end bells.

C. Provide nylon pull cord.

D. Identify, as specified in Paragraph IDENTIFICATION DEVICES, with waterproof tags attached to pull cord at each end, and at intermediate pull point.

3.17 IDENTIFICATION DEVICES

A. Raceway Tags:

1. Identify origin and destination.

2. Install at each terminus, near midpoint, and at minimum intervals of every 50 feet of exposed Raceway, whether in ceiling space or surface mounted.

3. Provide nylon strap for attachment.

B. Warning Tape: Install approximately 12 inches above underground or concrete-encased raceways. Align parallel to, and within 12 inches of, centerline of runs.

C. Buried Raceway Markers:

1. Install at grade to indicate direction of underground raceways.

2. Install at all bends and at intervals not exceeding 100 feet in straight runs.

3. Embed and secure to top of concrete base, sized 14 inches long, 6 inches wide, and 8 inches deep; top set flush with finished grade.

3.18 PROTECTION OF INSTALLED WORK

A. Protect products from effects of moisture, corrosion, and physical damage during construction.

B. Provide and maintain manufactured watertight and dust-tight seals over all conduit openings during construction.

C. Touch up painted conduit threads after assembly to cover nicks or scars.

D. Touch up damage to coating on PVC-coated conduit with patching compound approved by manufacturer.

END OF SECTION

SECTION 16120

CONDUCTORS

PART 1 - GENERAL

1.01 REFERENCES

A. The following is a list of standards that may be referenced in this section:

1. American National Standards Institute (ANSI): 386, Standard for Separable Insulated Connector Systems for Power Distribution Systems Above 600V.

2. American Society for Testing and Materials (ASTM):

   a. A167, Standard Specification for Stainless and Heat Resisting Chromium-Nickel-P1ated Steel Plate, Sheet, and Strip.

   b. B3, Standard Specification for Soft or Annealed Copper Wire.

   c. B8, Standard Specification for Concentric-Lay-Stranded Copper Conductors, Hard, Medium-Hard, or Soft.

   d. B263, Standard Test Method for Determination of Cross- Sectional Area of Stranded Conductors.

3. Association of Edison Illuminating Companies (AEIC):

   a. CS 5, Crosslinked Polyethylene Insulated Shielded Power Cables Rated 5 Through 35 kV.

   b. CS 6, Ethylene- Propylene-Rubber-Insulated Shielded Power Cables Rated 5 Through 69 kV.

4. Insulated Cable Engineer's Association, Inc. (ICEA): T-29-250, Procedure for Conducting Vertical Cable Tray Flame Test With a Theoretical Heat Input of 210,000 Btu/hour.

5. Institute of Electrical and Electronics Engineers, Inc. (IEEE):

   a. 48, Standard Test Procedures and Requirements or High-Voltage Alternating Current Cable Terminations.

   b. 404, Standard for Cable Joints for Use with Extruded Dielectric Cable Rated 5,000V through 46,000V and Cable Joints for Use with Laminated Dielectric Cable Rated 2,500V through 500,000V.

6. National Electrical Contractors Association, Inc. (NECA): 5055, Standard of Installation.

7. National Electrical Manufacturers' Association (NEMA):

a. CC 1, Electric Power Connectors for Substations.

b. WC 3, Rubber-insulated Wire and Cable for the Transmission and Distribution of Electrical Energy.

c. WC 5, Thermoplastic Insulated Wire and Cable for the Transmission and Distribution of Electrical Energy.

d. WC 7, Crosslinked-Thermosetting-Polyethylene-lnsulated Wire and Cable for the Transmission and Distribution of Electrical Energy.

e. WC 8, Ethylene-Propylene-Rubber Insulated Wire and Cable for the Transmission and Distribution of Electrical Energy.

f. WC 55, Instrumentation Cables and Thermocouple Wire.

8. National Fire Protection Association (NFPA): 70, National Electrical Code (NEC).

9. Underwriters Laboratories, Inc. (UL):

a. 13, Standard for Safety Power-Limited Circuit Cables.

b. 44, Standard for Safety Rubber-Insulated Wires and Cables.

c. 62, Standard for Safety Flexible Cord and Fixture Wire.

d. 486A, Standard for Safety Wire Connector and Soldering Lugs for Use with Copper Conductors.

e. 486B, Standard for Safety Wire Connectors and Soldering Lugs for Use with Aluminum Conductors.

f. 510, Standard for Safety Insulating Tape.

g. 854, Standard for Safety Service-Entrance Cables.

h. 910, Standard for Safety Test Method for Fire and Smoke Characteristics of Electrical and Optical-Fiber Cables Used in Air Handling Spaces.

i. 1072, Standard for Safety Medium-Voltage Power Cables.

j. 1277, Standard for Safety Electrical Power and Control Tray Cables with Optional Optical-Fiber Members.

k. 1581, Standard for Safety Reference Standard for Electrical Wires, Cables, and Flexible Cords.

1.02 SUBMITTALS

A. Shop Drawings:

1. Wire and cable descriptive product information.

2. Wire and cable accessories descriptive product information.

3. Cable fault detection system descriptive product information.

B. Quality Control Submittals:

1. Certified Factory Test Report for conductors 600 volts and below.

2. Certified Factory Test Report per AEIC CS6, including AEIC qualification report for conductors above 600 volts.

1.03 UL COMPLIANCE

A. Materials manufactured within scope of Underwriters Laboratories shall conform to UL Standards and have an applied UL listing mark.

PART 2 -- PRODUCTS

2.01 CONDUCTORS 600 VOLTS AND BELOW

A. Conform to applicable requirements of NEMA WC 3, WC 5, and WC 7.

B. Conductor Type:

1. All Circuits: Stranded copper.

C. Insulation: Type THHN/THWN except for sizes No. 6 and larger use XHHW.

D. Direct Burial and Aerial Conductors and Cables:

1. Type USE/RHH/RHW insulation, UL Standard 44, Type RHW-2/USE-2.

2. Conform to physical and minimum thickness requirements of NEMA WC 3.

E. Flexible Cords and Cables:

1. Type SOW-A50 with ethylene propylene rubber insulation in accordance with UL 62.

2. Conform to physical and minimum thickness requirements of NEMA WC 8.

2.02 600-VOLT RATED CABLE

A. General:

1. Permanently and legibly marked with manufacturer's name, maximum working voltage for which cable was tested, type of cable, and UL listing mark.

2. Suitable for installation in open air, in cable trays, or conduit.

3. Minimum Temperature Rating: 90 degrees Celsius dry locations, 75 degrees Celsius wet locations.

4. Overall Outer Jacket: PVC, flame-retardant, sunlight- and oil-resistant.

B. Wire and Connectors:

1. Cable shall be rated for 600 volts and shall meet the requirements below:

2. Conductors shall be stranded

3. All wire shall be brought to the job in unbroken packages and shall bear the data of manufacturing; not older than 12 months.

4. Type of wire shall be XHHW or THHN, rated 75 degrees Celsius suitable for wet locations except where required otherwise by the drawings.

5. No wire smaller than No. 12 gauge shall be used unless specifically indicated.

6. Conductor metal shall be copper.

7. All conductors shall be megger tested after installation and insulation must be in compliance with the Insulated Power Cable Engineers Association Minimum Values of Insulation Resistance.

C. Type l-Multiconductor Control Cable:

1. Conductors:
   a. No. 14 AWG, seven-strand copper.
   b. Insulation: 15-mil PVC with 4-mil nylon.
   c. UL 1581 listed as Type THHN/THWN rated VW-I.
   d. Conductor group bound with spiral wrap of barrier tape.
   e. Color Code: In accordance with NEMA WC 5, Method 1, Sequence K-2.

2. Cable: Passes the ICEA T-29-520 210,000 Btu/hr Vertical Tray Flame Test.

3. Cable Sizes:

No. of Conductors	Max. Outside Diameter (inches)	Jacket Thickness (mils)
3	0.41	45
5	0.48	45
7	0.52	45
12	0.72	60
19	00.83	60
25	1.00	60
37	1.15	80

4. Manufacturers:
   a. Okonite Co.
   b. Rome Cable.

D. Type 2-Multiconductor Power Cable:

1. Conductors:

   a. Class B stranded, coated copper.

   b. Insulation: Chemically crosslinked ethylene-propylene with Hypalon jacket.

   c. UL 1581 listed as Type EPR, rated VW-1.

   d. Color Code: Conductors, size No. 8 AWG and smaller, colored conductors, NEMA WC5 Method 1, color 5 per Article POWER CONDUCTOR COLOR CODING. Conductors, size No. 6 AWG and larger, NEMA WC5, Method 4.

2. Cable pass the ICEA T-29-520 210,000 Btu/hr Vertical Tray Flame Test.

3. Cable Sizes:

Conductor Size	Minimum Ground Wire Size	No. of Conductors	Max.Outside Diameter (Inches)	Nominal Jacket Thickness (Mils)
12	12	2 3 4	0.42 0.45 0.49	45 45 45
10	10	2 3 4	0.54 0.58 0.63	60 60 60
8	10	3 4	0.66 0.72	60
6	8	3 4	0.74 0.81	60
4	6	3 4	0.88 0.97	60 80
2	6	3 4	1.01 1.11	80
1/0	6	3 4	1.22 1.35	80
2/0	4	3 4	1.32 1.46	80
4/0	4	3 4	1.56 1.78	80

4. Manufacturers:
   a. Okonite Co.
   b. Pome Cable.

E. Type B-No. 16 AWG, Twisted, Shielded Pair, Instrumentation Cable: Single pair, designed for noise rejection for process control, computer, or data log applications meeting NEMA WC 55 requirements.

1. Outer Jacket: 45-mil nominal thickness.

2. Individual Pair Shield: 1.35-mil, double-faced aluminum/synthetic polymer overlapped to provide 100 percent coverage.

3. Dimension: 0.31-inch nominal OD.

4. Conductors:
   a. Bare soft annealed copper, Class B, seven-strand concentric, meeting requirements of ASTM B8
   b. 20 AWG, seven-strand tinned copper drain wire.
   c. Insulation: 15-mil nominal PVC.
   d. Jacket: 4-mil nominal nylon.
   e. Color Code: Pair conductors black and red.

5. Manufacturers:
   a. Okonite Co.
   b. Alpha Wire Corp.

6. The following test shall be performed on instrumentation and control system cables. All tests shall be end-to-end test of installed cables with the ends supported in free air, not adjacent to any ground object. All test data shall be recorded on forms acceptable to the Engineer. Complete records of all tests shall be made and delivered to the Engineer.

   a. Continuity tests shall be performed by measuring wire/shield loop resistances of signal cable as the wires, taken one at a time, are shorted to the channel shield. No loop resistance measurement shall vary by more than ± 2 ohms from the calculated average loop resistance valve.

   b. Insulation resistance tests shall be performed by using a 500 volt megohmeter to measure the insulation resistance between each channel wire and channel shield, between individual channel shields in a multi-channel cable, between each individual channel and the overall cable shield in multi-channel cable, between each wire and ground, and between each shield and ground. Values of resistance less than 10 megohms shall be unacceptable.

F. Type B1-No. 16 AWG, Twisted, Shielded Triad Instrumentation Cable: Single triad, designed for noise rejection for process control, computer, or data log applications meeting NEMA WC 55 requirements.

1. Outer Jacket: 45-mil nominal.

2. Individual Pair Shield: 1.35-mil, double-faced aluminum/synthetic polymer, overlapped to provide 100 percent coverage.

3. Dimension: 0.32-inch nominal OD.

4. Conductors:

   a. Bare soft annealed copper, Class B, seven-strand concentric, meeting requirements of ASTM B8.

   b. 20 AWG, seven-strand, tinned copper drain wire.

   c. Insulation: 15-mil nominal PVC.

   d. Jacket: 4-mil nylon.

   e. Color Code: Triad conductors black, red, and blue.

5. Manufacturers:
   a. Okonite Co.
   b. Alpha Wire Corp.

G. Type B2-No. 18 AWG, Multi-Twisted, Shielded Pairs with a Common, Overall Shield Instrumentation Cable: Designed for use as instrumentation, process control, and computer cable, meeting NEMA WC 55 requirements.

1. Conductors:

   a. Bare soft annealed copper, Class B, seven-strand concentric, in accordance with ASTM B8

   b. Tinned copper drain wires.

   c. Pair drain wire size AWG 20, group drain wire size AWG 18.

   d. Insulation: 15-mil PVC.

   e. Jacket: 4-mil nylon.

   f. Color Code: Pair conductors black and red with red conductor numerically printed for group identification.

   g. Individual Pair Shield: 1.35-mil, double-faced aluminum/synthetic polymer.

2. Cable Shield: 2.35-mil, double-faced aluminum/synthetic polymer, overlapped for 100 percent coverage.

3. Cable Sizes:

Number of Pairs	Maximum Outside Diameter (inches)	Nominal Jacket Thickness (mils)
4	0.50	45
8	0.68	60

12	0.82	60
16	0.95	80
24	1.16	80
36	1.33	80
50	1.56	80

4. Manufacturers:
   a. Okonite Co.
   b. Alpha Wire Corp.

H. Type B3-No. 18 AWG, Multi-twisted Pairs with a Common Overall Shield Instrumentation Cable: Designed for use as instrumentation, process control, and computer cable meeting NEMA WC 55.

1. Conductors:
   a. Bare soft annealed copper, Class B, seven-strand concentric, in accordance with ASTM B8.
   b. Tinned copper drain wire size 18 AWG
   c. Insulation: 15-mil nominal PVC.
   d. Jacket: 4-mil nylon.
   e. Color Code: Pair conductors black and red, with red conductor numerically printed for group identification.

2. Cable Shield: 2.35-mil, double-faced aluminum/synthetic polymer, overlapped for 100 percent coverage.

3. Cable Sizes:

Number Of Pairs	Maximum Outside Diameter (inches)	Nominal Jacket Thickness (mils)
4	0.46	45
8	0.63	60
12	0.75	60
16	0.83	60
24	1.06	80
36	1.21	80
50	1.42	80

4. Manufacturers:
   a. Okonite Co.
   b. Alpha Wire Corp.

2.03 CONDUCTORS ABOVE 600 VOLTS

NOT USED

2.04 GROUNDING CONDUCTORS

A. Equipment: Stranded copper with green, Type THHN/THWN or XHHW insulation.

B. Direct Buried: Bare Tinned Stranded Copper.

2.05 ACCESSORIES FOR CONDUCTORS 600 VOLTS AND BELOW

A. Tape:

1. General Purpose, Flame Retardant: 7-mil, vinyl plastic, Scotch Brand 33, rated for 90 degrees Celsius minimum, meeting requirements of UL 510.

2. Flame Retardant, Cold and Weather Resistant: 8.5-mil, vinyl plastic, Scotch Brand 88.

3. Arcs and Fireproofing:
   a. 30-mil, elastomer
   b. Manufacturers and Products:
      1) Scotch; Brand 77, with Scotch Brand 69 glass cloth tape binder.
      2) Plytnount; Plyarc 30, with Plymount Plyglas glass cloth tape binder.

B. Identification Devices:

1. Sleeve: Permanent, PVC, yellow or white, with legible machine-printed black markings.

2. Marker Plate: Nylon, with legible designations permanently hot stamped on plate.

3. Grounding Conductor: Permanent green heat-shrink sleeve, 2-inch minimum.

C. Connectors and Terminations:

1. Nylon, Self-Insulated Crimp Connectors:
   a. Manufacturers and Products:
      1) Thomas & Betts; Sta-Kon.
      2) Burndy; Insulink.
      3) ILSCO.

2. Nylon, Self-Insulated, Crimp Locking-Fork, Torque-Type Terminator:
   a. Manufacturers and Products:
      1) Thomas & Betts; Sta-Kon.
      2) Burndy; Insulink.
      3) ILSCO.

D. Cable Lugs:

1. In accordance with NEMA CC I.

2. Rated 600 volts of same material as conductor metal.

3. Insulated, Locking-Fork, Compression Lugs:
   a. Manufacturers and Products:
      1) Thomas & Betts; Sta-Kon.
      2) ILSCO; ILSCONS.

4. Un-insulated Crimp Connectors and Terminators:
   a. Manufacturers and Products:
      1) Square D; Versitide.
      2) Thomas & Betts; Color-Keyed.
      3) ILSCO.

5. Un-insulated, Bolted, Two-Way Connectors and Terminators:
   a. Manufacturers and Products:
      1) Thomas & Betts; Locktite.
      2) Burndy; Quiklug.
      3) ILSCO.

E. Cable Ties: Nylon, adjustable, self-locking, and reusable.

1. Manufacturers and Product: Thomas & Betts; TY-RAP.

F. Heat Shrinkable Insulation: Thermally stabilized, crosslinked polyofin.

1. Manufacturers and Product: Thomas & Betts; SHRINK-KON.

2.06 ACCESSORIES FOR CONDUCTORS ABOVE 600 VOLTS

NOT USED

2.07 PULLING COMPOUND

A. Nontoxic, non-corrosive, noncombustible, nonflammable, wax-based lubricant; UL listed.

B. Suitable for rubber, neoprene, PVC, polyethylene, hypalon, CPE, and lead-covered wire and cable.

C. Suitable for zinc-coated steel, aluminum, PVC, bituminized fiber, and fiberglass raceways.

D. Manufacturers and Products:

1. Ideal Co.; Yellow 77.

2. Polywater, Inc.

3. Cable Grip Co.

2.08 WARNING TAPE

A. As specified in Section 16110, RACEWAYS.

2.09 SOURCE QUALITY CONTROL

A. Conductors 600-Volts and Below: Test in accordance with UL 44 and 854 Standards.

2.10 FIBER OPTIC DATA CABLE

NOT USED

PART 3 – EXECUTION

3.01 GENERAL

A. Conductor installation to be in accordance with NECA 5055.

B. Conductor and cable sizing shown is based on copper conductors, unless noted otherwise.

C. Do not exceed cable manufacturer's recommendations for maximum pulling tensions and minimum bending radii.

D. Tighten screws and terminal bolts in accordance with UL 486A for copper conductors.

E. Cable Lugs: Provide with correct number of holes, bolt size, and center-to-center spacing as required by equipment terminals.

F. Bundling: Where single conductors and cables in manholes, hand holes, vaults, and other indicated locations are not wrapped together by some other means, bundle conductors from each conduit throughout their exposed length with cable ties placed at intervals not exceeding 18 inches on center.

G. Ream, remove burrs, and clear interior of installed conduit before pulling wires or cables.

H. Concrete-Encased Raceway Installation: Prior to installation of conductors, pull through each raceway a mandrel approximately 1/4-inch smaller than raceway inside diameter.

3.02 POWER CONDUCTOR COLOR CODING

A. Conductors 600 Volts and Below:

1. No. 6 AWG and Larger: Apply general purpose, flame retardant tape at each end, and at accessible locations wrapped at least six full overlapping turns, covering an area 1-1/2 to 2 inches wide.

2. No. 8 AWG and Smaller: Provide colored conductors.

3. Colors:

System	Conductor	Color
All Systems	Equipment Grounding	Green
240/120 Volts Single-Phase, Three-Wire	Grounded Neutral One Hot Leg Other Hot Leg	White Black Red
208Y/120 Volts Three-Phase, Four-Wire	Grounded Neutral Phase A Phase B	White Black Red

	Phase C	Blue
240/120 Volts Three-Phase, Four-Wire Delta, Center Tap Ground on Single-Phase	Grounded Neutral Phase A High (wild) Leg Phase C	White Black Orange Blue
480Y/277 Volts Three-Phase, Four-Wire	Grounded Neutral Phase A Phase B Phase C	Gray Brown Purple Yellow
NOTE: Phase A, B, C implies direction of positive phase rotation		

4. Tracer: Outer covering of white with an identifiable colored strip other than green in accordance with NFPA 70.

3.03 CIRCUIT IDENTIFICATION

A. Circuits Appearing in Circuit Schedules: identify power, instrumentation, and control conductor circuits, using circuit schedule designations, at each termination and in accessible locations such as manholes, hand holes, panels, switchboards, motor control centers, pull boxes, and terminal boxes.

B. Circuits Not Appearing in Circuit Schedules:

1. Assign circuit name based on device or equipment at load end of circuit.

2. Where this would result in same name being assigned to more than one circuit, add number or letter to each otherwise identical circuit name to make it unique.

C. Method:

1. Conductors No. 3 AWG and Smaller: Identify with sleeves.

2. Cables, and Conductors No. 2 AWG and Larger:
   a. Identify with marker plates.
   b. Attach marker plates with nylon tie cord.

3. Taped-on markers or tags relying on adhesives not permitted.

3.04 CONDUCTORS 600 VOLTS AND BELOW

A. Install 10 AWG or 12 AWG conductors for branch circuit power wiring in lighting and receptacle circuits.

B. Do not splice incoming service conductors and branch power distribution conductors No. 6 AWG and larger unless specifically indicated or approved by Engineer.

C. Connections and Terminations:

1. Install wire nuts only on solid conductors.

2. Install nylon self-insulated crimp connectors and terminators for instrumentation, control, and power circuit conductors No. 6 AWG and smaller.

3. Install un-insulated crimp connectors and terminators for instrumentation, control, and power circuit conductors No. 4 AWG through No. 2/0 AWG.

4. Install un-insulated, bolted, two-way connectors and terminators for power circuit conductors No. 4/0 AWG and larger.

5. Install un-insulated bolted, two-way connectors for motor circuit conductors No. 12 and larger.

6. Tape insulates all un-insulated connections.

7. Place no more than one conductor in any single-barrel pressure connection.

8. Install crimp connectors with tools approved by connector manufacturer.

9. Install terminals and connectors acceptable for type of material used.

10. Compression Lugs
    a. Attach with a tool specifically designed for purpose.
    b. Tool shall provide complete controlled crimp and shall not release until crimp is complete.
    c. Do not use plier type crimpers.

D. Do not use soldered mechanical joints.

E. Splices and Terminations:

1. Indoors: Use general purpose, flame retardant tape.

2. Outdoors: Use flame retardant, cold- and weather-resistant tape.

F. Cap spare conductors and conductors with UL listed end caps.

G. Cabinets, Panels, and Motor Control Centers:

1. Remove surplus wire, bridle and secure.

2. Where conductors pass through openings or over edges in sheet metal, remove bums, chamfer edges, and install bushings and protective strips of insulating material to protect the conductors.

H. Control and Instrumentation Wiring:

1. Where terminals provided will accept such lugs, terminate control and instrumentation wiring, except solid thermocouple leads, with insulated, locking-fork compression lugs.

2. Terminate with methods consistent with terminals provided, and in accordance with terminal manufacturer's instructions.

3. Locate splices in readily accessible cabinets or junction boxes using terminal strips.

4. Where connections of cables installed under this section are to be made under INSTRUMENTATION, leave pigtails of adequate length for bundled connections.

5. Cable Protection:
   a. Under Infinite Access Floors: May be installed without bundling.
   b. All Other Areas: Install individual wires, pairs, or triads in flex conduit under the floor or grouped into bundles at least 1/2-inch in diameter.
   c. Maintain integrity of shielding of instrumentation cables.
   d. Ensure grounds do not occur because of damage to jacket over the shield.

I. Extra Conductor Length: For conductors to be connected by others, install minimum 6 feet of extra conductor in freestanding panels and minimum 2 feet in other assemblies.

END OF SECTION

SECTION 16261
SERVICE ENTRANCE RATED ATS

PART 1 GENERAL

1.01 SCOPE

A. The Contractor shall furnish and install a service entrance rate Automatic Transfer Switches having the ratings, features/accessories and enclosures as specified herein and as shown on the contract drawings. Refer to electrical drawings for size and rating.

B. Note: The term “transfer switch” and “ATS” in this section shall refer to “service entrance rated ATS”.

1.02 REFERENCES

A. The following is a list of standards which may be referenced in this section:

1. American National Standards Institute (ANSI):
   a. C37.90. I, Surge Withstand Capacity (SWC) Tests for Protective Relays and Relay Systems.
   b. Z55.1, Gray Finishes for Industrial Apparatus and Equipment.
2. National Electrical Manufacturers Association (NEMA):
   a. ICS 1, General Standards for Industrial Control and Systems.
   b. ICS 2, Standards for Industrial Control Devices, Controllers, and Assemblies.
   c. ICS 6, Enclosures for Industrial Control and Systems.
   d. 250, Enclosures for Electrical Equipment (1,000 Volts Maximum) .
3. National Fire Protection Association (NFPA): 70, National Electrical Code (NEC).
4. Underwriters Laboratories, Inc. (UL): 1008, Automatic Transfer Switches.
5. Uniform Building Code (UBC): Section 2312, Earthquake Requirements.

1.03 SUBMITTALS-FOR REVIEW/APPROVAL

A. The following information shall be submitted to the Engineer:

1. Master drawing index
2. Dimensioned outline drawing
3. Schematic diagram
4. Component list
5. Conduit entry/exit locations
6. Assembly ratings including:
   a. Short-circuit rating
   b. Voltage
   c. Continuous current.

B. Submit ten (10) copies of the above information.

1.04 SUBMITTALS-FOR INFORMATION

A. When requested by the Engineer the following product information shall be submitted:

1. Descriptive bulletins
2. Product data sheets.

1.05 SUBMITTALS-FOR CLOSEOUT

A. The following information shall be submitted for record purposes:

1. Final (as-built) drawings and information for items listed in section 1.3
2. Wiring diagrams
3. Certified production test reports
4. Installation information
5. Seismic certification and equipment anchorage details.

A. Submit ten (10) copies of the above information.

1.06 QUALITY ASSURANCE

A. The manufacturer of the automatic transfer switch shall be the manufacturer of the major components within the assembly.

B. For the equipment specified herein, the manufacturer shall be ISO 9000, 9001 or 9002 certified.

C. The manufacturer of this equipment shall have produced similar electrical equipment for a minimum period of five (5) years. When requested by the Engineer, an acceptable list of installations with similar equipment shall be provided demonstrating compliance with this requirement.

1.07 REGULATORY REQUIREMENTS

A. A certificate of compliance with UL 1008 must be submitted for the transfer switches to be supplied. The certificate is not required if the manufacturer's published data submitted and approved reflect a UL 1008 listing. Proof of UL 1008 listing does not, however, relieve the Contractor of compliance with other provisions of this specification.

1.08 DELIVERY, STORAGE AND HANDLING

A. Equipment shall be handled and stored in accordance with manufacturer's instructions. One (1) copy of these instructions shall be included with the equipment at time of shipment.

1.09 OPERATION AND MAINTENANCE MANUALS

A. Ten (10) copies of the equipment and maintenance manuals shall be provided.

B. Operation and maintenance manuals shall include the following information:

1. Instruction books and/or leaflets
2. Recommended renewal parts list
3. Drawings and information required by section 1.06.

PART 2 PRODUCTS

2.01 MANUFACTURERS

A. Cutler-Hammer

B. ASCO

C. Or Engineer and Owner Approved Equal

2.02 RATINGS

A. Refer to electrical drawing for ATS interrupting rating.

B. The voltage rating of the transfer switch shall be no less than the system voltage rating. The continuous current rating of the transfer switch shall be no less than the maximum continuous current requirements of the system.

C. The transfer switch shall be 100% equipment rated for continuous duty as shown on the drawings and shall conform to the applicable requirements of UL 1008 for emergency system total load.

D. All pilot devices and relays shall be of the industrial type with self-cleaning contacts and rated 10-amperes.

E. The automatic transfer switches shall be fully rated to protect all types of loads, inductive and resistive, from loss of continuity of power, without derating, either open or enclosed.

2.03 CONSTRUCTION

A. The transfer switches shall consist of completely enclosed contact assemblies and a separate control logic panel. The contact assemblies shall be operated by a non-fused motor operator or stored energy mechanism and be energized only momentarily during transfer, providing inherently double throw switching action. Control power for all transfer operations shall be derived from the line side of the source to which the load is being transferred.

B. Transfer switches shall be capable of being operated manually under full load conditions. Manual operation shall be accomplished via a permanently affixed manual operator or integrally mounted pushbutton operators located on the face of the contact assemblies. Removable manual operating handles and handles which move in the event that electrical operators should suddenly become energized while performing a manual transfer operation are not acceptable. The manual operator shall provide the same contact-to-contact transfer time as provided under normal automatic operation to prevent possible flashovers from switching the main contacts slowly. In addition, provisions shall be made to allow disengagement of the electrical operator during manual operation.

C. Each transfer switch shall be positively interlocked both mechanically and electrically to prevent simultaneous closing of both sources under either automatic or manual operation. Main contacts shall be mechanically locked in position in both normal and emergency positions. A neutral position shall not be possible under normal electrical operation unless a delayed transition accessory is required for switching highly inductive loads. Each transfer switch shall have a manual neutral position for load circuit maintenance. A transfer switch position indicator shall be visible from the front of the switch to show to which source the transfer switch is connected.

D. All three-phase four-wire transfer switches used on systems with ground fault equipment shall be true four-pole switched neutral type with all four poles for each source being fully rated and connected to a common shaft. The fourth (neutral) pole contacts shall be of identical construction as, and operate simultaneously with, the main power contacts. Add-on or overlapping neutral contacts are not acceptable.

E. Inspection and replacement of all separate arcing contacts (moving and stationary) shall be possible from the front of the transfer switch.

F. An electronic sensing and control logic panel shall be separately mounted from the power switching portion of the transfer switch. The two sections shall be connected by control cables with plug-in connectors. The control section shall be capable of being disconnected from the power section for maintenance purposes.

G. The logic circuit shall utilize electronic components mounted on printed circuit boards to accomplish functions such as timing, time delays, and voltage and frequency monitoring. LEDs shall be furnished to indicate the operation of each solid-state function. Modifications shall be available for field installation without voiding the UL label.

H. The transfer switch shall be equipped with a voltage selection plug making it suitable for operation on standard voltages from 208 through 600 volts AC, 50 or 60 hertz, by placing the voltage selection plug in the proper voltage receptacle.

I. Transfer switches applied as service entrance switches shall be provided with overcurrent trip units and a service entrance label. An external key-operated selector switch shall be provided to disconnect the power supplies. Indicators shall be provided to show the availability of each source as well as breakers in a tripped or disconnected position. Provide a neutral disconnect link for three-pole solid neutral switches, and a neutral-to-ground main bonding jumper for all switches to meet UL service entrance requirements. Provide shunt trip breaker type as shown in one line diagram. Ground fault protection shall be provided for all switches rated 1000 amperes or more applied on 480Y/277-volts AC systems in accordance with NEC Article 230-95.

2.04 DRAWOUT DESIGN

NOT USED.

2.05 WIRING/TERMINATIONS

A. Terminal blocks shall conform to NEMA ICS 4. Terminal facilities shall be arranged for entrance of external conductors from the top or bottom of the enclosure. The main transfer switch terminals shall be suitable for the termination of conductors shown on the plans.

2.06 SEQUENCE OF OPERATION

A. The transfer switch shall automatically transfer its load circuit to an emergency or alternate power supply upon failure of its normal or preferred source.

B. Upon loss of phase-to-phase voltage of the normal source to 80% of nominal, and after a time delay, adjustable from 0.5 to 15 seconds, to override momentary dips and/or outages, a 10-ampere, 30-Vdc contact shall close to initiate starting of the emergency or standby source power plant. Transfer to the alternate source shall take place immediately upon attainment of 90% of rated voltage and frequency of that source. For switches not involving engine generator sets as power plants, transfer shall occur after an adjustable time delay of 1 to 60 seconds to override momentary dips and outages.

C. When the normal source has been restored to 90% of rated voltage, and after a time delay, adjustable from 0.5 to 32 minutes (to ensure the integrity of the normal power source), the load shall be retransferred to the normal source.

D. A time delay, adjustable from 0.5 to 32 minutes, shall delay shutdown of the emergency or standby power source after retransfer to allow the generator to run unloaded for cool-down, after which the generator shall be automatically shut down.

E. If the emergency or standby power should fail while carrying the load, transfer to the normal power supply shall be made instantaneously upon restoration of the normal source to satisfactory conditions.

2.07 ENCLOSURE

A. Each transfer switch shall be provided in enclosures suitable for locations as indicated on the drawings and as described below.

1. NEMA 4X (316 stainless steel) watertight enclosures intended for indoor or outdoor use primarily to provide protection against windblown dust and rain, splashing rain, hose-directed water, and damage from external ice formation.

2.08 FINISH

A. NEMA 1, 12 or 3R enclosures shall be painted with the manufacturer's standard painting procedures to ensure suitability for environmental conditions as referenced in the plans. Color shall be light gray ANSI 61. NEMA 4 or 4X shall be stainless steel, non-painted.

2.09 ACCESSORIES

A. The following logic and options shall be supplied:

1. The logic of the transfer switch shall function via a microprocessor.
Where shown on the drawings provide electronic transfer device equal to Cutler-Hammer type IQ Transfer. The set points shall be field adjustable without the use of special tools. The switch shall have a multi-tap voltage selection plug for ease of voltage adjustment in the field. LED lights shall be included on the exterior of the switch to show:

Normal Source Available
Emergency Source Available
Normal Source Connected
Emergency Source Connected
Load Energized.

A digital readout shall display each option as it is functioning. Readouts shall display actual line-to-line voltage, line frequency and timers. When timers are functioning, the microprocessor shall display the timer counting down. All set points can be re-programmed from the front of the switch when the switch is in the program mode. A test pushbutton shall be included as part of the microprocessor. The microprocessor shall be compatible with a Cutler-Hammer IMPACC communications system. The switch shall include the following:

a. Provide a time delay transfer from the normal power source to the emergency power source (0 seconds to 30 minutes). This option does not effect the engine start circuit.

b. Provide a timer to override a momentary power outage or voltage fluctuation (0 seconds to 120 seconds).

c. Provide a time delay transfer from the emergency power source to the normal power source (0 seconds to 30 minutes).

d. Provide a timer to allow the generator to run unloaded after re-transfer to the normal power supply (1 second to 30 minutes).

e. Provide single-phase under voltage and under frequency sensing on the emergency power source. Voltage shall be factory set at 90% pickup and 80% dropout. Frequency sensing shall be set at 58-hertz pickup and 56-hertz dropout.

f. Provide a pilot light to indicate that the switch is in the normal position as an integral part of the microprocessor.

g. Provide a pilot light to indicate that the switch is in the emergency position as an integral part of the microprocessor.

h. Provide a pilot light to indicate that the normal power is available as an integral part of the microprocessor.

i. Provide a pilot light to indicate that the emergency power is available as an integral part of the microprocessor.

j. Provide auxiliary relay contacts that are energized when the power is available on the normal source.

k. Provide auxiliary relay contacts that are energized when the power is available on the emergency source.

B. The following features shall be provided:

1. Time delay normal to emergency, adjustable
2. Time delay emergency to normal, adjustable
3. Green pilot light to indicate switch in normal position and red pilot light to indicate switch in emergency position
4. White pilot lights marked "Normal Source" and "Emergency Source" to indicate that respective source voltages are available

5. Tripped position indicating lights for both sources
6. Relay auxiliary contacts (2 NO and 2 NC) to indicate transfer switch position and the availability of each source.

C. When the alternate source is an engine generator, the following features shall also be provided:

1. Time delay engine start, adjustable
2. Time delay engine cool off, adjustable
3. Engine start contact
4. Frequency/voltage relay for emergency source, frequency adjustable from 45 to 60 Hz and voltage fixed at 90% pickup, 70% dropout
5. Delayed transition time delay, adjustable from 0 to 120 seconds, to allow disconnection of the load during transfer in either direction to prevent excessive inrush currents due to out-of-phase switching of large inductive loads
6. Four-position selector switch permitting four (4) modes of transfer switch operation: TEST (simulates normal power outage), AUTO (standard automatic operation), OFF (de-energizes control relays and opens the engine start circuit for maintenance purposes), ENGINE START (retains transfer switch in normal position and initiates a testing of the engine start circuit). Furnish white pilot light for OFF indication.

D. A transfer switch position indicator shall be visible from the front of the switch.

E. Provide preferred source selector (source 1 or source 2, or none).

2.10 COMMUNICATIONS

A. Where shown on the drawings, provide in the transfer switch a microprocessor-based unit capable of communicating phase and ground current, peak demand, present demand, energy consumption, contact status, and mode of trip.

B. Provide communications capability to monitor the normal and emergency switch position and normal and emergency source availability. Additional communications capability shall be provided to bypass time delays during transfer or retransfer, and to initiate engine start for no-load or load testing of the transfer switch from a remote master computer.

PART 3 EXECUTION

3.01 FACTORY TESTING

A. The following standard factory tests shall be performed on the equipment provided under this section. All tests shall be in accordance with the latest version of UL and NEMA standards.

1. Insulation check to ensure the integrity of insulation and continuity of the entire system
2. Visual inspection to ensure that the switch matches the specification requirements and to verify that the fit and finish meet quality standards
3. Mechanical tests to verify that the switch's power sections are free of mechanical hindrances
4. Electrical tests to verify the complete electrical operation of the switch and to set up time delays and voltage sensing settings of the logic

B. The manufacturer shall provide three (3) certified copies of factory test reports.

3.02 INSTALLATION

A. Install in accordance with manufacturer's instructions.

END OF SECTION

SECTION 16450

GROUNDING

PART 1 - GENERAL

1.01 REFERENCES

A. The following is a list of standards which may be referenced in this section:

1. American National Standards Institute (ANSI): C2, National Electrical Safety Code (NESC).

2. National Fire Protection Association (NFPA): 70, National Electrical Code (NEC).

1.02 SUBMITTALS

A. Shop Drawings:

1. Product Data:

a. Exothermic weld connectors.

b. Mechanical connectors.

1.03 UL COMPLIANCE

A. Materials manufactured within scope of Underwriters Laboratories shall conform to UL Standards and have an applied UL listing mark.

PART 2 - PRODUCTS

2.01 GROUND ROD

A. Material: Copper clad.

B. Diameter: 3/4 inch.

C. Length: 20 feet.

2.02 GROUND CONDUCTORS

A. Bare Tinned Copper as specified in Section 16120, CONDUCTORS.

2.03 CONNECTORS

A. Exothermic Weld Type:

1. Outdoor Weld: Suitable for exposure to elements or direct burial.

2. Indoor Weld: Utilize low-smoke, low-emission process.

3. Manufacturers:

   a. Erico Products, Inc.; Cadweld and Cadweld Exolon.

   b. Thermoweld.

   c. Approved equal.

B. Mechanical Type: Split-bolt, saddle, or cone screw type; copper alloy material.

1. Manufacturers:

   a. Burndy Corp.

   b. Thomas and Betts Co.

   c. Approved equal.

2.04 GROUNDING WELLS:

A. Ground rod box complete with cast iron riser ring and traffic cover marked GROUND ROD.

B. Manufacturers:

1. Christy Co.; No. G5.

2. Lightning and Grounding Systems, Inc.; I-R Series

3. Approved equal.

PART 3 – EXECUTION

3.01 GENERAL

A. Grounding shall be in compliance with NFPA 70 and ANSI C2.

B. Ground electrical service neutral at service entrance equipment to supplementary grounding electrodes.

C. Ground each separately derived system neutral to nearest effectively grounded building structural steel member or separate grounding electrode.

D. Bond together system neutrals, service equipment enclosures, exposed non-current-carrying metal parts of electrical equipment, metal raceways, ground

conductor in raceways and cables, receptacle ground connections, and metal piping systems.

E. Shielded Power Cables: Ground shields at each splice or termination in accordance with recommendations of splice or termination manufacturer.

F. Shielded Control Cables:

1. Ground shield to ground bus at power supply for analog signal.

2. Expose shield minimum I inch at termination to field instrument and apply heat shrink tube.

3. Do not ground control cable shield at more than one point.

3.02 WIRE CONNECTIONS

A. Ground Conductors: Install in conduit containing power conductors and control circuits above 50 volts.

B. Nonmetallic Raceways and Flexible Tubing: Install an equipment grounding conductor connected at both ends to non current-carrying grounding bus.

C. Connect ground conductors to raceway grounding bushings.

D. Extend and connect ground conductors to ground bus in all equipment containing a ground bus.

E. Connect enclosure of equipment containing ground bus to that bus.

F. Bolt connections to equipment ground bus.

G. Bond grounding conductors to metallic enclosures at each end, and to intermediate metallic enclosures.

H. Junction Boxes: Furnish materials and connect to equipment grounding system with grounding clips mounted directly on box, or with 3/8-inch machine screws.

3.03 MOTOR GROUNDING

A. Extend equipment ground bus via grounding conductor installed in motor feeder raceway; connect to motor frame.

B. Nonmetallic Raceways and Flexible Tubing: Install an equipment grounding conductor connected at both ends to non current-carrying grounding bus.

C. Motors Less Than 10 hp: Furnish mechanical-type terminal connected to conduit box mounting screw.

D. Motors 10 hp and Above: Tap motor frame or equipment housing; furnish mechanical-type terminal connected with minimum 5/16-inch brass threaded stud with bolt and washer.

E. Circuits 20 Amps or Above: Tap motor frame or equipment housing; install solderless terminal with minimum 5/16-inch diameter bolt.

3.04 GROUND RODS

A. Install full length with conductor connection at upper end.

B. Install with connection point below finished grade, unless otherwise shown.

3.05 GROUNDING WELLS

A. Install inside buildings, asphalt, and paved areas.

B. Install riser ring and cover flush with surface.

C. Place 9 inches crushed rock in bottom of each well.

3.06 CONNECTIONS

A. General:

1. Above grade Connections: Use either exothermic weld or mechanical-type connectors.

2. Below grade Connections: Install exothermic weld type connectors.

3. Remove paint, dirt, or other surface coverings at connection points to allow good metal-to-metal contact.

4. Notify ENGINEER prior to backfilling ground connections.

B. Exothermic Weld Type:

1. Wire brush or file contact point to bare metal surface.

2. Use welding cartridges and molds in accordance with manufacturer's recommendations.

3. Avoid using badly worn molds.

4. Mold to be completely filled with metal when making welds.

5. After completed welds have cooled, brush slag from weld area and thoroughly clean joint.

C. Mechanical Type:

1. Apply homogeneous blend of colloidal copper and rust and corrosion inhibitor before making connection.

2. Install in accordance with connector manufacturer's recommendations.

3. Do not conceal mechanical connections.

3.07 METAL STRUCTURE GROUNDING

A. Ground metal sheathing and exposed metal vertical structural elements to grounding system.

B. Bond electrical equipment supported by metal platforms to the platforms.

C. Provide electrical contact between metal frames and railings supporting pushbutton stations, receptacles, and instrument cabinets, and raceways carrying circuits to these devices.

3.08 MANHOLE AND HANDHOLE GROUNDING

A. Install one ground rod inside each.

B. Ground Rod Floor Protrusion: 4 to 6 inches above floor.

C. Make connections of grounding conductors fully visible and accessible.

D. Connect all non current-carrying metal parts, and any metallic raceway grounding bushings to ground rod with No. 6 AWG copper conductor.

3.09 TRANSFORMER GROUNDING

A. Bond neutrals of transformers within buildings to system ground network, and to any additional indicated grounding electrodes.

B. Bond neutrals of substation transformers to substation grounding grid and system grounding network.

C. Bond neutrals of pad-mounted transformers to four locally driven ground rods and buried ground wire encircling transformer and system ground network.

3.10 SURGE PROTECTION EQUIPMENT GROUNDING

A. Connect surge arrestor ground terminals to equipment ground bus.

3.11 INSTRUMENT GROUND - SURGE SUPPRESSION

A. Connect all instrument surge protection with #6 insulated copper ground wire (in conduit where above grade) to closest plant ground system

3.12 BONDING

A. Bond to Main Conductor System:

1. All roof mounted ventilators, fans, air handlers, masts, flues, cooling towers, handrails, and other sizeable metal objects.

2. Roof flashing, gravel stops, insulation vents, ridge vents, roof drains, soil pipe vents, and other small metal objects if located within 6 feet of main conductors or another grounded object.

3. Provide air terminals as required.

B. Bond steel columns or major framing members to grounding system per National Electrical Code.

C. Bond each main down conductor to grounding system.

3.13 GROUNDING SYSTEM

A. Grounding Conductor:

1. Completely encircle building structure.

2. Bury minimum 30” below finished grade.

3. Minimum 2 feet distance from foundation walls.

B. Interconnect ground rods by direct-buried copper cables.

C. Connections:

1. Install ground cables continuous between connections.

2. Exothermic welded connections to ground rods, cable trays, structural steel, handrails, and buried and nonaccessible connections.

3. Provide bolted clamp type mechanical connectors for all exposed secondary connections.

4. Use bolded offset parapet bases or through-roof concealed base assemblies for air terminal connections.

5. Provide interconnections with electrical and telephone systems and all underground water and metal pipes.

6. Provide electric service arrestor ground wire to building water main.

END OF SECTION

SECTION 16620

VAPOROUS NATURAL GAS ENGINE DRIVEN GENERATOR WITH WEATHER PROTECTIVE OUTDOOR ENCLOSURE

PART 1 - GENERAL

1.01 SCOPE OF WORK

A. This Section covers the work for provision of a natural gas fueled engine power generating system, complete. Furnish all necessary labor, materials, equipment, tools, services, incidentals, and perform all services and operations required to install, put into operation, and field test the weather protective enclosed standard industry pipeline natural gas fueled engine driven generator unit and all related systems and appurtenances for a complete and properly working generator system in place.

B. It is the intent of these Specifications that there is a single source of supply and responsibility for the entire specified engine generator system. Due to the coordination required between the generator equipment and related systems, the engine generator supplier shall be the responsible party, through the Installing Contractor, and supply the entire engine generator equipment system, less site installation materials and installation related services and labor to be furnished by the Installing Contractor.

C. These Specifications include specific requirements for a standby emergency generator system, but do not necessarily cover all details which may vary in accordance with the specified requirements of the equipment to be furnished and the location for which it is to be installed. It is, however, intended to cover the furnishing, the shop testing, delivery, complete installation and field testing of all materials, equipment, and appurtenances for provision of a complete and properly operating Industry standard pipeline dry natural gas fueled US EPA emissions compliant and certified spark ignited stationary standby emergency power generator and electrical power transfer system. The Installing Contractor shall provide all requirements as may be necessary to provide a properly installed operating natural gas fueled engine generator standby power system at no additional cost to the Owner or the Engineers.

D. This Specification defines requirements for an engine generator set manufacturer furnished industry pipeline natural gas fueled US EPA emissions certified and UL2200 Listed Stationary Emergency standby spark ignited engine generator set which shall be provided for completely automatic unattended operation. Selectable manual operation capability shall additionally be provided for the generator set. System voltage shall be 480 / 277 Volts AC, 3 phase, 4 wire, 60 Hz, at 0.8 power factor. The generator system starting and control logic shall be powered by the generator set's starting / control batteries. Control signals for automatic start and stop operation of the generator set shall be provided in the connected remote automatic transfer switch equipment. The generator system normal operation shall not be required to be electrically paralleled with the electric Utility during any electrical transfer or running operations.

E. The engine generator (EG) system shall be fully automatic and shall constitute a complete, unified, and coordinated alternative electric standby power system ready for operation and use. Provide a complete and separate independent complete standby engine-generator system consisting of one (1) new Industry standard pipeline natural gas fuel operated spark ignited engine electric standby power duty generator set installed within an outdoor weather protective

enclosure for selectable automatic and manual starting, operation, including all related generator equipment accessory equipment, generator automatic transfer equipment necessary for Electric Utility and generator electrical power transfer operations with the Station electrical loads.

F. The Installing Contractor shall be responsible for all costs and services as required for the complete provision, site installation, and field testing of the furnished EG system equipment including all mechanical and electrical interface requirements for the generator equipment, remote automatic electrical transfer switch equipment, remote annunciation and communications equipment, and all other generator system accessory equipment as required for proper automatic starting, running, stopping, electrical power transfer operations, and monitoring of the EG system.

G. For the generator set equipment provided, there shall be furnished and installed all necessary items, accessory equipment, and auxiliaries necessary to provide a generator set manufacturer furnished US EPA emissions compliant and certified properly operating natural gas fueled Stationary Emergency standby electrical engine generator system, whether specifically mentioned in these Specifications or not. The equipment and installation shall incorporate the highest standards for the type of equipment and service as specified herein and as shown on the Drawings. The Installing Contractor is responsible for complete and satisfactory instruction of the Owner's regular operating personnel in the care, operation, and maintenance of all furnished generator system equipment.

H. The standby engine-generator system to be furnished by the engine generator supplier shall include, but not necessarily be limited to, the following basic components for each of the furnished generator set units:

1. Engine – spark ignited, natural gas fueled, EPA certified
2. Engine electronic isochronous AC governing system
3. Generator – AC power
4. Generator set control panel - electronic
5. Generator voltage regulator – 3 phase sensing, automatic
6. Generator mounted shunt trip circuit breaker for generator main AC power
7. Engine-mounted radiator closed loop cooling water system
8. Engine air fuel ratio and emissions controls
9. Engine automatic variable timing and magneto system
10. Generator set engine natural gas operating system
11. Exhaust system with specified attenuation grade silencer
12. Engine exhaust after treatment and emissions control equipment

13. Generator starting / control battery and automatic battery charger.

14. Generator set steel spring vibration isolators

15. Engine-generator set accessories

16. Generator outdoor weather protective enclosure

17. Generator set and enclosure structural steel frame floor and mounting base.

18. Generator remote annunciation panel

1.02 SYSTEM DESCRIPTION

A. The Generator Supplier (generator system equipment supplier – EG supplier) shall provide one (1) outdoor weather protected, sound attenuated enclosed pipeline natural gas fueled standby engine generator set and associated generator system equipment as shown on the Drawings and as specified herein. The standby power rated spark ignited engine-generator set shall be furnished by the manufacturer to be a US EPA emission certified packed generator set that is nameplate rated to have a minimum Factory rating and site capability of stationary standby emergency power duty operation at **175 KW, 218 KVA at 0.80 power factor, 480 / 277 Volt AC, 3-phase, 4-wire, 60 hertz.**

B. The Generator Supplier shall provide calculation documents stating that the generator system supplied can handle all below loads during the submittal. The calculation documents shall show the sKVA requirements of the loads and the sKVA of the generator as a minimum.

   a. Step 1: 9kVA lighting load
   b. Step 2: one 75HP (112A, 591 low RPM) motor with soft starter (maximum of one pump shall operate on emergency generator power)

C. The engine-generator set shall be mounted and installed as shown on the Drawings and shall be furnished and arranged for both manual and unattended automatic starting and stopping operation, and for the automatic electrical power transfer to the connected Station loads upon failure of the normal source of electrical power, or as manually selected and operated by the Owner. The engine generator set shall include the capability of being signal controlled for automatic start, run, and stop operations by the connected generator set automatic transfer switch equipment.

D. The generator set shall be designed and manufactured so as to be able to be started and properly operated on site connected industry standard pipeline natural gas supply as the only generator set engine fuel source. The generator system shall be able to be automatically electrically transferred to the connected Station loads in either automatic or manual modes of operation. Upon engine generator crank initiation, the generator set shall start, attain rated speed and voltage, and be able to accept the electrical transfer of Station loads within ten (10) seconds of time, as per NFPA 110, for Level 1 generator systems. It shall be the responsibility of the Generator Supplier to furnish the generator electrical transfer switch equipment to ensure a coordinated, single source furnished generator electrical control and transfer system for use with the connected Station loads as shown on the Drawings.

E. The Installing Contractor shall be responsible to technically coordinate with the Generator Supplier and the industry pipeline natural gas utility company to ensure provision of proper supply of natural gas supply flows, pressures, volume, and quantity of industry standard pipeline natural gas is available to be continuously available and furnished to the generator set engine, adequate for proper generator set starting and sustained operation during all ranges of generator set operation between generator set no load and full load output operation. The Contractor shall connect the required site natural gas fuel supply to a natural gas supply connection port installed on the exterior of the generator set enclosure by the generator set manufacturer.

F. The generator system starting and operational control logic shall be powered by the generator sets' starting / control batteries. The engine mounted speed governor and fuel system shall control the generator set speed, while generator output voltage regulation shall be controlled by the generator mounted three phase sensing automatic voltage regulator. Generator control panel mounted manual adjustment of generator voltage shall be provided.

G. Site Conditions

1. The operating environment of the standby engine generator system shall be as follows:

Altitude level up to maximum ..... 1,000 ft
Outdoor temperature, maximum .....110 °F
Outdoor temperature, minimum..... 10 °F
Outdoor humidity, maximum …… …… …….. ….92%
Engine jacket water, glycol mixture percentage 50/50
Installation type…… … outdoors within a weather protective enclosure
Fuel type..... Industry standard Pipeline dry natural gas
Fuel delivery system … …. ….. ….. .Industry pipeline dry natural gas
Fuel Supply ……..… as required by the generator set manufacturer
Cooling system type ..... engine mounted radiator with blower fan
Exhaust system ……. ….. ……. Inside generator outdoor enclosure

H. System Performance

1. The engine generator system shall conform to the following general performance criteria

a. Rating - Engine brake horsepower shall be sufficient to deliver full rated engine-generator set KW/KVA when operated at rated RPM and equipped with all engine-mounted parasitic and external loads.
b. Conditions - Ratings are based on dry pipeline natural gas having a Low Heat Value (LHV) of a minimum of nominal 920 Btu/cu ft and 80 MIN
c. Rating and fuel consumption are based on ISO3046/1 standard reference conditions of 77 Degrees Fahrenheit and 100 kPa with 5 % NG fuel consumption tolerance
d. The furnished generator sets shall meet the class G1 transient performance criteria as defined by ISO 8528-5

2. With the proper supply of natural gas, the furnished and installed generator set shall be capable of and demonstrate accepting single step load pickup electrical loading in 75% of generator nameplate power output and then an additional 25 % load step in sequential loading application. The generator set shall be allowed to achieve steady state operation between each load step application.

1.03 QUALIFICATIONS

A. The furnished engine-generator set including the generator set mounting structural support base and radiator systems shall be the generator set manufacturer's standard and current production model furnished as required by these Specifications. and provided by a Manufacturer regularly engaged in the design and production of this type, size, and model of equipment. The engine furnished with the generator set shall be manufactured in the United States of America, and the complete generator set package shall be assembled by the generator set manufacturer in the United States of America, no exceptions. Generator sets utilizing engines manufactured outside of the United States are not acceptable and will be rejected. The unit to be furnished shall include an engine model with proven performance and that has been in manufacturing production for a minimum of five (5) continuous years. The furnished generator set model shall be designed, constructed, and installed in accordance with best practices and methods in order to achieve and provide optimal physical and operational performance of the standby power generator system.

B. It is the intent of this Specification to secure and install a natural gas fueled electric standby emergency generator system that has been prototype tested, factory built, and production tested by the generator set manufacturer. The furnished generator set shall be site tested, together with all accessories necessary for a complete installation as shown on the Plans and Drawings, and as indicated in the Specifications. The equipment, as supplied and installed shall meet the requirements of the NEC, the standards and codes as listed herein and all applicable Federal, state, and local standards, codes, and regulations. The generator set, generator set enclosure and automatic transfer switch equipment shall be supplied by a single generator set manufacturer authorized equipment distributor so that there shall be single source of responsibility for reliable warranty, parts, and service provisions to the Owner through a local representative with factory-trained servicemen.

C. The unit must be of such physical dimensions as to make a good installation in the opinion of the Engineer, in the space provided as indicated on the Drawings. In no case, shall the overall dimensions of the generator set equipment and outdoor enclosure package exceed the Basis of Design Caterpillar generator set enclosure package dimensions shown on the Drawings.

D. The furnished generator set, including the engine and generator furnished with it shall be Manufacturer designed, manufactured, built, and assembled in the United States of America. The furnished generator set model shall be US EPA certified and labeled by the generator set manufacturer to meet the applicable exhaust emissions levels and associated equipment certification requirements of the United States Environmental Protection Agency's (U.S. EPA) New Source Performance Standard (NSPS) for spark ignited (SI) engines(40 CFR 60, Subpart JJJJ) regulations and final Federal Register for gas fueled engine driven stationary emergency standby generator sets in affect at the time of the generator set's manufacture and shipment, no exceptions. Documentation confirming that the engine to be furnished with the generator set shall be manufactured in the United States shall be provided in the generator set shop drawings submitted to the Engineer and the Owner. The generator set to be furnished shall not be released for manufacture until Engineer review approval of the EG vendor issued generator set Shop Drawing submittals has been issued. Generator sets that do not meet these manufacturing and generator set manufacturer EPA regulatory emissions certification requirements shall not be acceptable and shall be rejected in their entirety.

E. The unit shall be furnished and shipped to the jobsite by the generator equipment Manufacturer's authorized local engine distributor having a parts and service Station located within a 100 mile

radius of the jobsite. In addition, and in order not to penalize the Owner for unnecessary or prolonged periods of time for parts availability, service, or repairs to the emergency system, the bidding generator set equipment supplier must have no less than eighty percent (80%) of all engine replacement parts locally available at all times. Generator Supplier certified proof of this specified requirement shall be included in the Shop Drawing Submittals. subject to approval and acceptance by the Engineers.

F. All materials, generator equipment, and parts comprising the generator system shall be new and unused, of current production design and manufacture, and free from all defects or imperfections. Only new and current generator set models will be considered. The generator set, outdoor weather protective generator enclosure, and automatic transfer switch equipment shall be manufactured only after the generator set Shop Drawing Submittals have been reviewed and approved by the Engineer, no exceptions. The equipment shall be required to meet the requirements of the Specifications and the Drawings. Generator supplier exceptions or noncompliance to the Specifications or Drawings may be considered sufficient cause for rejection of the equipment by the Engineer. The Contractor shall be responsible to provide all equipment and actions as necessary to correct all generator system deficiencies or noncompliance issues at no additional cost to the Engineer or to the Owner.

G. The complete engine generator set, and all related systems and accessories, including the outdoor weather protective enclosure and generator automatic transfer switch shall be furnished by one (1) supplier, thus ensuring that the responsibility for performance to this Specification shall not be divided among individual suppliers and thereby assuring high standards of quality, coordination, reliability and service. The provision and performance responsibility for all of the furnished generator equipment shall be assumed solely by one primary vendor who shall directly deliver, service, test, commission, warrant, and service the furnished generator set and accessory generator system equipment.

H. The Generator Supplier shall be the engine generator Manufacturer's Factory authorized direct distributor physically located in South Florida, who maintains complete local sales, parts, and service facilities and provision in the field of electric power generation on direct behalf of the manufacturer of the engine generator set to be furnished, including factory trained mechanics and technicians and engine generator replacement parts for the unit supplied, and shall be located within one hundred (100) miles of the Project location. Second level Manufacturer's sub-dealers or redistribution suppliers do not comply with this requirement and shall not be accepted. Noncompliance to these requirements shall be sufficient cause for rejection of the equipment and the supplier by the Engineer.

I. Manufacturers: The generator set shall be manufactured and assembled as a complete assembled and operating package by the manufacturer. The engine, generator, and radiator used with the furnished generator set shall be manufactured in the United States of America, no exceptions. The generator set with all auxiliaries shall be supplied through the generator set Manufacturer's authorized direct distributor who must be physically located in the South Florida area within a maximum distance of 100 miles from the project site. Generator set packages and generator set manufacturers that do not meet this manufacturing requirement and suppliers located outside of the specified location range shall not be acceptable and shall be rejected. The furnished engine generator set shall be designed, manufactured, and supplied in accordance with these Specifications and as shown on the Drawings.

J. Acceptable engine generator set manufacturers are as follows:
   1. Caterpillar, Inc.

2. Manufacturer listing does not solely constitute acceptance of the generator equipment. Listed acceptable manufacturer products for the generator system shall comply with all of the requirements of Basis of Design, the Project Specifications, and Drawings for the generator set and associated equipment, including performance capability, and must receive Engineer acceptance and approval.

1.04 SUBMITTALS

A. Submittal shall include Factory prototype test certification and specification sheets for the model generator set proposed to be furnished. Prototype testing shall not be performed on the specific generator set to be furnished. The submittal documentation shall show all standard and optional accessories to be supplied, schematic wiring diagrams, dimension drawings, and interconnection diagrams identifying by location and terminal number each required for interconnection between the generator set, the transfer switch equipment and all required remote annunciation equipment. Provide equipment mounting and installation details shall be provided.

B. The successful bidder shall submit to the Engineer for review in accordance with other Sections, complete sets of installation drawings, schematics, and wiring diagrams which shall show details of installation and connections to the work of other Sections, including generator set enclosure and mounting base drawings showing locations and sizes of site installation mounting holes for the generator set / enclosure, and technical data and documentation covering details for each item of equipment to be furnished.

C. In the event that it is impossible to conform to certain details of the Specifications and Drawings due to different manufacturing techniques, provide justification explanation, describe completely all nonconforming aspects, and provide details of any alternate proposals for Engineer review and approval consideration, which may be accepted or rejected by the Engineer. Failure to submit with equipment meeting the requirements of the drawings and the specifications is sufficient cause for Engineer rejection of the submitted equipment and supplier. Manufacturer and / or Generator Supplier customization of the equipment as required to conform to the specified requirements shall be provided and shall not negatively impact the equipment's mechanical or electrical integrity, operation, specified performance, or warranty considerations or coverages.

D. The Engineer has the right to reject in their entirety any and all requested generator system Specification deviations or alterations. In this case, the Generator Supplier and Installing Contractor shall still be required to furnish the specified equipment in a timely basis at no cost to the Engineer or to the Owner and the Contractor shall be solely responsible for any project schedule delays and associated costs and penalties. Failure to identify any equipment or performance deviations from the Specifications and Drawings shall not relieve the Installing Contractor of responsibility to provide at no additional cost to the Engineer or the Owner the specified equipment and associated products.

E. The submittal data for the engine/generator set, outdoor weather protective sound attenuated enclosure, and accessory equipment, including the generator main circuit breaker and automatic transfer switch equipment shall include, but not necessarily be limited to, the following:

1. Detailed mechanical and installation drawings showing plan and elevations of the complete generator unit; foundation plan; exhaust silencer; starting battery; battery charger, weather protective enclosure, and package mounting base including mounting locations. Interconnection points for AC power cables, AC power and service, AC / DC control and annunciation interfaces, including dimensional

locations for all natural gas, engine lubricating oil and cooling water piping and drain line connections and terminations.

2. Manufacturer's Engine Data:

a. Manufacturer.....
b. Model.....
c. Number of cylinders .....
d. RPM.....
e. Bore x stroke.....
f. BMEP at full rated load.....
g. Piston speed, FPM.....
h. Make and model and descriptive literature of electronic governor …. …
i. Engine Combustion air flow …… ……. …… …… …….. ….
j. Engine exhaust air flow ……. …… ……. …… ……..
k. Radiator discharge air flow ……. ……. …… ……... ……
l. Maximum radiator air / ventilation air restriction.. ……... ……. …..
m. Maximum exhaust flow restriction …… ……. ……. ……. ……
n. Natural gas fuel consumption rate data at various generator power output levels from no load to full load ……. ……. …… ……...
o. Natural gas supply inlet pressure and flow range requirements …… …….
p. Exhaust emissions data at varying loads.(include NOX, CO, and VOC) ..
q. Generator set engine manufacturer data and documentation confirming engine exhaust US EPA emissions regulatory compliance and certification provisions ……. …… ……. …… …… …… …… …… …… ……
r. Gross engine horsepower to produce generator standby rating (including fan and all parasitic loads), BHP..... .... …… ….. …..
s. Mechanical sound data (overall and at different frequencies and varying distances) ….. …… ….. ……. …… …… …… ……. …… ….. …
t. Exhaust sound data (overall and at different frequencies and varying distances)….. …. …… …… …… …… ….. …. ….. …. ….. …..
u. Engine fuel supply secondary gas pressure regulator and carburetor.
v. Spark ignition, variable fuel magneto system ….. ….. ….. …… ….. ..
w. Engine air fuel ratio controls system ….. ….. ……. ….. …… ….. …. ….. ..
x. Engine exhaust after treatment equipment system …. ….. …… …… .
y. Natural gas fuel supply consumption and pressure requirements for the furnished generator set at various KW load levels up to 100 % generator nameplate KW rating.. …. …. …. …… ……. ……. …… ……. ……

3. Generator Data:

a. Manufacturer.....
b. Model .....
c. Rated KVA .....
d. Rated SKVA.....
e. Rated KW.....
f. Voltage.....
g. Amperage …….. …… …… …….. …… …… …. …
h. Power Factor……. ……. …….. ……. …….. …… …. …….
i. Temperature rise above 40 degree C ambient…. ….. …….. ….. .. …….
j. Excitation type …… …… ……. ……. …….. …… … ……

1) Stator by thermometer.....
2) Field by resistance.....
3) Class of insulation.....

k. Generator efficiency including excitation losses and at 80 percent power factor.
1) Full (100 %) load.....
2) 3/4 load.....
3) 1/2 load.....

l. Complete generator reactance, transient, damage and decrement curve information.
m. Automatic Voltage Regulator make and model ……
n. Number of generator leads ….. …… ….. …… …… …… …… …… .. …….

4. Generator Set electrical data:

a. Actual electrical wiring diagrams including schematic diagrams for all generator set controls and associated electrical equipment including all enclosure mounted electrical items, automatic transfer switch, and remote annunicator panel showing project specific electrical interface connections, and interconnection wiring information for all equipment to be provided for Engineer review and for applicable wiring interface use by the Installing Contractor. Standard preprinted sheets are not acceptable.
b. Legends and description for all devices on all diagrams.
c. Sequence of operation explanations for all portions of all schematic wiring diagrams.

5. Engine/Generator Unit and Outdoor Weather Protective Enclosure:

a. Weight of completely assembled unit.....
b. Overall length.....
c. Overall width .....
d. Overall height …. …… ……. …… …….. …… …… …… ……. .
e. Weather protective enclosure details and certification of manufacturing method and construction per Specifications.
f. Data confirming specified sound attenuation levels for the generator set, exhaust silencer and enclosure equipment.
g. Gas fuel system and equipment details including gas supply piping interconnection locations and gas supply requirements.
h. Engine exhaust and exhaust after treatment equipment and installation data
i. Technical Data on all miscellaneous mechanical and electrical items supplied.

6. Furnish copies of the Manufacturer's generator set prototype testing information and certified Manufacturer's Factory production shop test documentation and records, and site testing documentation for the complete furnished engine driven generator unit.

7. Furnish generator set manufacturer data and documentation confirming the generator set model to be furnished is EPA approved and certified to comply with EPA gaseous fueled spark ignited engine emissions regulated levels and standards.

8. Provide engine generator set Manufacturer's prototype torsional vibration testing analysis report to confirm that the model engine generator set packaged configuration to be furnished it has been designed, constructed and assembled by the generator set engine generator manufacturer so as to be free from objectionable or harmful vibrations in any operational mode. The Manufacturer's detailed torsional report for the factory testing of a similar production unit shall demonstrate that the generator set model to be furnished shall operate free from excessive torsional vibrations and is to be submitted to the Engineer for review prior to generator set.

9. Engine Oil sampling analysis service- Description and details of required engine oil sampling procedures, service provided, and recommended frequency of analysis service to be provided to the Owner for the furnished generator set.

10. Service – Location and description of Generator Supplier's parts and service facilities and capabilities, including qualified generator equipment service personnel information.

11. Warranty information and documentation including details and Generator Supplier certifications indicating complete compliance with the specified generator equipment warranty requirements.

12. Calculations showing actual net generator outputs (KW) relating to the gross engine power output (BHP) on natural gas including all parasitic loads and the generator full load efficiency.

F. Submit to the Engineer in binders, complete parts, operating and maintenance data and instructions for all furnished generator system equipment, including written sequence of operations, troubleshooting procedures, as-built electrical wiring schematics and diagrams, and parts identification / replacement ordering information for all supplied equipment.

G. Submit to the Engineer the Generator Supplier's equipment Certificate of Proper Installation indicating furnished equipment installed compliance with the Manufacturer's installation and operating guidelines and requirements to these Specifications. Provide substantiating documentation indicating verification of compliance with US EPA emissions and certification requirements for the furnished generator set equipment.

H. Submit written warranty documentation to the Engineer indicating complete compliance with the specified equipment warranty requirements by the Generator Supplier.

1.05 TESTING

To assure that the equipment has been designed and built to the highest reliability and quality standards, the Manufacturer and Generator Supplier shall be responsible for, as a minimum, four (4) separate tests: Factory packaged generator set prototype tests, final Factory production tests, site load bank and startup testing, and site generator system operational demonstration tests.

A. Factory Design Prototype Tests: Components of the emergency system such as the engine/generator set, transfer switch, and accessories to be furnished shall not be subjected to prototype tests since the tests are potentially damaging to the equipment to be furnished.

Rather, similar design prototypes and preproduction models shall have been used for the following tests. Prototype test programs shall include the following minimum requirements:

1. Maximum engine (BHP) and generator set rated output power (KW) as operated on natural gas.
2. Maximum motor starting (KVA) versus voltage drop at varying loads.
3. Alternator temperature rise by embedded thermocouple and by resistance method per NEMA MG1-2240 and 16.40.
4. Governor speed regulation under steady-state and transient response conditions.
5. Voltage regulation under steady state conditions.
6. Natural gas fuel consumptions at generator rated 1/4, 1 /2, 3/4, and full load.
7. Harmonic analysis, voltage waveform deviation, and telephone influence factor.
8. Alternator cooling air flow.

B. Final Factory Production Tests: The engine-generator set Manufacturer shall perform Factory testing and quality control inspections on the specific engine-generator set to be provided utilizing industry standard pipeline natural gas prior to being shipped from the Factory. The Manufacturer's certified report of these tests and inspections shall be submitted to the Engineer prior to delivery of the unit to the site.

1. The engine, generator, and engine-generator set package shall be subjected to the Factory testing and quality control inspections to insure reliable operation. These tests and inspections shall include, but not necessarily be limited to the following:

   a. Full load testing with natural gas fuel supply to confirm baseline data with recording of the following:

      1) Engine Generator Set:
         a) Generator set speed (RPM)
         b) Generator set power (KW)
         c) Rated frequency (Hz)
         d) Full load Average voltage
         e) Line to line voltages, per phase
         f) Full load average current
         g) Line currents, per phase
         h) Power factor

2. Prior to Factory shipment, the engine-generator set shall be tested by the generator set manufacturer to show it is free of any defects and will start automatically and carry full rated standby load. This testing shall be performed at the Generator Supplier's generator set Manufacturer's Factory prior to shipment.

3. The Factory testing shall be performed on the generator set to be furnished at the Factory with reactive load banks at 0.8 power factor and shall be capable of definite and precise incremental loading. The testing shall be performed with industry standard pipeline natural gas fuel at the furnished generator set rated load and rated power factor.

4. The load bank utilized for testing of the generator set shall not be dependent on the generator control instruments to read amperage and voltage on each phase. Rather, the test instrumentation shall serve as a check of the generator set meters.

5. All items and consumables necessary for testing shall be furnished by the engine generator Manufacturer. Any generator equipment defects which become evident during the Factory testing shall be corrected by the engine Manufacturer at his own expense prior to Factory shipment.

C. Site startup and load bank tests: An installation check shall be provided by the Generator Supplier and shall furnish the Engineer with written certification assuring that each item of equipment is complete, in good condition, free from damage, and properly installed, connected and ready for startup.

D. The generator system start-up, temporary load bank test, and building load test shall be performed by the Generator Supplier who is the Manufacturer's local representative as coordinated with and in conjunction with the Installation Contractor and as witnessed by the Engineer. The Engineer shall be notified two (2) weeks in advance of the time and date of all generator system equipment site testing. The tests shall include, but not necessarily be limited to the following:

1. Conformity to the generator equipment manufacturer's installation recommendations shall be verified by the Generator Supplier.

2. Accessories that normally function while the set is standing by shall be operationally checked by the Generator Supplier prior to cranking the engine. These shall include: engine block heaters, battery charger, generator strip heaters, remote annunciation and emergency stop systems, and automatic transfer switch equipment items.

3. Start-up under test mode to check for gaseous fuel, oil, coolant, and exhaust leaks, proper path of exhaust gases outside the enclosure, proper ventilation cooling air inlet and outlet flows and restrictions, excessive movement during starting, operation and stopping, excessive vibrations, proper normal and emergency line-to-line voltages and currents, frequency and voltage regulation throughout all modes of operation, and electrical phase rotation verifications for the generator and transfer switch equipment including Utility and load side connections.

4. The Generator Supplier shall provide a temporary dry type, resistive load bank and temporary cables for the generator set site load bank testing. Building load shall not be used until satisfactory load bank testing of the generator set has been completed and approved by the Engineer. The load bank AC power cables shall be temporarily connected and disconnected to the load bank and the generator equipment by the Installing Electrical Contractor as necessary to perform the required satisfactory testing.

5. The Installing Contractor shall be completely responsible for the provision, installation, and all connections of the onsite Industry pipeline dry natural gas supply systems for the engine generator set as required for all generator startup and testing and permanent generator system operation. The Installing Contractor shall coordinate with the Generator Supplier and the Utility gas supplier to ensure generator gas system operational requirements are furnished and available for generator set use at all times. The Installing Contractor shall ensure that the natural gas supply provided at the generator set engine is pressure regulated and compensated as necessary for the generator set engine gas supply and consumption requirements including for provision of adequate natural gas flow, volume, pressure, and stability as recommended by the generator set manufacturer be available at all times at the generator set's natural gas train

supply connection in order to allow proper operation of the engine generator set during all ranges of loading operation.

6. Generator system startup and testing procedures shall not necessarily be limited to those specified herein. Others shall be performed as required to demonstrate and prove that the generator system functions properly and as described and required by these Specifications.

7. Field generator set load bank testing - Utilizing the supplied natural gas fuel supply to the engine, cold start and single step block load the generator set at 75 % of the generator set's standby KW rating and after voltage and frequency have stabilized, add additional load so as to operate the generator set at sustained 75 % loading for one (1) hour and then add 25% load to achieve 100% generator set standby KW rating for three (3) hours additional continuous hours for a total load bank testing period of four (4) hours. Record generator set block loading transient high and low voltage and frequency levels and actual recovery time to achieve to steady state operation and stabilized voltage and frequency levels both on application and on removal of the test loads. Record the following readings in five (5) minute increments for the first fifteen (15) minutes of each test at the initiation of each block load testing and at ten (10) minute increments thereafter for the duration of each load testing period.

    a. Voltage (each of 3 phases)
    b. Amperage (each of 3 phases)
    c. Frequency
    d. Engine oil pressure
    e. Engine water temperature
    f. Outside ambient air temperature
    g. Battery charger amperage rate and battery voltage
    h. Kilowatts
    i. Power Factor
    j. Percent load
    k. Time at each recorded measurement

8. Normal operation is for the generator set is to start and operate providing electrical power to all connected Station loads with the proper and adequate supply of primary supply industry standard natural gas. Proper starting, functioning, performance, and operation of the complete generator system on the site furnished natural gas fuel supply, in both manual and automatic modes, all controls, generator set alarms and shutdowns safety devices, and required annunciation and remote shutdown operation shall be demonstrated by the Generator Supplier in coordination with the Installing Contractor.

9. The General Contractor, in conjunction with the services of the Generator Supplier shall additionally be required to successfully demonstrate the proper operation of the generator set when transferred and connected to available Station electrical loads at a later date in the presence of applicable approval Authorities Having Jurisdiction.

10. Provide generator equipment testing including, but not limited to generator set cycle cranking testing, cooling, exhaust and fuel system level monitoring and alarm operation testing, transfer operations, and generator system safety alarm / shutdown testing.

11. Should these tests fail or indicate that the equipment does not meet the specified performance requirements, requirements of the National Electrical Code and local codes, the cost of all corrective measures shall be borne by the Generator Supplier if equipment related and by the Installing Contractor if installation related. Once corrective measures are implemented, at no cost to the Engineer or the Owner, the operational testing shall be repeated at the cost of the responsible party, whether the Generator Supplier or the Installing Contractor, or both. Any defects or improper operation of equipment which become evident during the generator system startup and testing procedures shall be corrected before acceptance

12. Provide to the Engineer six (6) copies of Generator Supplier certified test data and reports of the complete generator equipment field load bank and operational testing as specified herein after satisfactory completion of startup and testing of the generator set equipment and system.

    A. Engine-Generator Pre-start Checks

        1. Engine lubricating oil level
        2. Coolant water level
        3. Natural gas supply connections
        4. Battery connection and, voltage and charge conditions
        5. Engine to control and all equipment interface connections
        6. Engine-generator intake air/exhaust obstructions
        7. Engine-generator enclosure ventilation obstructions
        8. Generator set equipment fluid leakage
        9. Electrical terminations / connections
        10. Enclosure wiring and electrical power
        11. Remote annunciation wiring
        12. Generator system installation acceptance
        13. Natural gas fuel supply and availability

13. Field Demonstration Testing: After completion of generator system startup and load bank testing and provision to the Engineer of the generator equipment proper installation and operation certifications, provide generator system testing to demonstrate proper generator set equipment operation in the presence of the Engineer and any necessary witnessing Authorities Having Jurisdiction regarding approval of the new generator system at the Station. Provide automatic generator set start-up by means of the furnished automatic transfer switch and demonstrate proper generator set starting, electrical transfer to the connected Station electrical loads, proper operation of the generator system, and automatic shutdown of the installed generator set. Proper engine coolant

temperature, oil pressure, and battery charge and voltage levels along with proper generator voltage, amperes, and frequency shall be demonstrated and recorded throughout all testing.

14. The Installing Contractor shall confirm and certify that the adequate supply of natural gas fuel (flow, volume, pressure, and stability) is continuously available from the gas utility and able to be provided to the generator set for proper sustained operation of the generator set at full load power at all times. Substantiate Utility natural gas fuel supply provisions at the site with generator set manufacturer fuel supply and consumption requirements data.

1.06 CODES AND STANDARDS

A. The generator set equipment, installation, and on-site testing shall conform to the guidelines and requirements of the following regulations, codes and standards:

1. CSA C22.2, No. 14 – M91 Industrial Control Equipment.
2. CSA 282, 1989 Emergency Electrical Power Supply for Buildings
3. EN50082-2, Electromagnetic Compatibility – Generic Immunity Requirements, Part 2: Industrial.
4. EN55011, Limits and Methods of Measurement of Radio Interference Characteristics of Industrial, Scientific and Medical Equipment.
5. FCC Part 15, Subpart B.
6. IEC8528 part 4. Control Systems for Generator Sets
7. IEC Std 801.2, 801.3, and 801.5 for susceptibility, conducted, and radiated electromagnetic emissions.
8. IEEE446 – Recommended Practice for Emergency and Standby Power Systems for Commercial and Industrial Applications
9. IEEE587 for voltage surge resistance.
10. Mil Std 461D –1993. Military Standard, Electromagnetic Interference Characteristics.
11. Mil Std 462D - 1993. Military Standard, Measurement of Electromagnetic Interference Characteristics.
12. NEMA ICS10-1993 – AC Generator sets.
13. NFPA70 – National Electrical Code. Equipment shall be suitable for use in systems in compliance to Article 700, 701, and 702.
14. UL508. The entire control system of the generator set shall be UL508 listed and labeled.
15. UL- Underwriters Laboratories.
16. NFPA54. National Fuel Gas Code.
17. NFPA30. Flammable and Combustible Liquids Code.
18. NFPA37. Standard for the Installation and Use of Stationary Combustion Engines and Gas Turbines
19. NFPA 110 regarding Type 10 starting requirement for emergency power systems
20. UL2200 – for generator sets- generator set shall be UL2200 Listed
21. FDEP. Florida Department of Environmental Protection.
22. US EPA. Federal Register – Standard of Performance for Stationary Spark Ignited Internal Combustion Engines, and EPA New Source Performance Standard for Stationary Reciprocating Compression Ignition Engines (NSPS, 40 CFR 60, Subpart JJJJ regulations as applicable for spark ignited engines (including all EPA Amendments)

1.07 BASIS OF DESIGN

A. The project generator system Basis of Design and equipment requirements for the Specifications and Drawings is around vaporous natural gas fueled engine generator set model no. DG175 GC, factory stationary emergency standby power duty rated at 175 KW / 218 KVA, 480 Vac, 3 phase, 0.8 P.F. as currently manufactured by Caterpillar, Inc.

B. The Installing Contractor shall be responsible for the complete installation of the generator vendor furnished generator system equipment as specified and as shown on the Drawings. Provision of the generator set equipment shall require that the Installing Contractor be responsible, without additional cost to the Engineer or to the Owner, for the furnishing of all of the entire generator system equipment including appurtenances and accessory equipment items necessary to comply with all specified requirements for the equipment and to be in complete equipment and performance compliance as specified herein and as shown on the Drawings. The Contractor shall be responsible for any provisions and installation modifications or revisions that may be necessary to properly furnish, install, and operate the proposed manufacturer's generator set and associated engine generator (EG) system equipment. This responsibility shall include, but not necessarily be limited to, all costs for any necessary revisions, Engineering services and drawing changes, mechanical and electrical modifications, permitting and approval requirements, Engineer and Owner services required due to Contractor submission rejections, additional or alternate construction materials and equipment, generator site alterations required for installation of the furnished EG system , for labor and services associated with the proper provision and installation of the EG vendor furnished generator set and associated equipment, and for any penalties and Owner costs and Owner loss in revenue directly or indirectly associated with any rejections of the Contractor submitted or furnished generator system equipment.

PART 2 - PRODUCTS

2.01 RATINGS

A. The standby emergency power rating of the furnished generator set shall be the generator set Manufacturer's standard published rating for the furnished generator set operating on industry standard pipeline natural gas fuel. The gross engine horsepower required to produce the standby rating shall not exceed the Manufacturer's published continuous duty rating by more than 150 percent. The gross engine horsepower required for the generator set standby rating described above shall include all parasitic demands such as generator inefficiencies, water and oil pumps, radiator fan, and all accessories necessary to the unit's proper operation while operating at rated load and at an engine and generator operational rotative speed not to exceed nominal 1,800 rpm.

B. The engine/generator unit shall have a Manufacturer's nameplated minimum output stationary standby emergency power rating of 175 KW, 218 KVA, 277 / 480 VAC, 3-Phase, 60 Hertz) at 0.8 power factor with radiator fan when operating on industry standard pipeline dry natural gas. The vaporous natural gas engine driven generator set shall be capable of producing the specified standby KW power rating on Industry standard dry pipeline natural gas for both automatic and manual transfer of continuous electrical service during interruption of the normal utility source and shall be certified to this effect by the Manufacturer for the actual unit supplied.

C. The furnished engine/generator set shall be sized and selected to accommodate the starting and continued operation of the types and sizes of Station connected electrical loads as shown on the Drawings. The furnished generator shall be configured and sized so as to reduce the harmful effects of nonlinear load generated or related harmonic current distortions.

2.02 ENGINE

A. The natural gas fueled engine provided with the generator set shall be manufactured in the United States, no exceptions. engine shall be gaseous fueled, spark ignited, four (4) stroke, either inline or vertical ("V") type engine block. Engine and generator rotative speed shall not exceed 1,800 revolutions per minute at normal full load operation. Multi block or 2 cycle engines are not acceptable or allowed. The engine governor shall be isochronous electronic type with a +/- 0.25 percent engine speed control accuracy.

B. The engine shall be Factory designed, rated, and capable of satisfactory performance on the supply provision of 7-11 in H2O Industry standard dry pipeline natural gas with Industry standard average nominal Low Heat Values (LHV) of 920 btu/cu. ft. The generator set shall be designed and manufactured to satisfactorily operate on a supply of pipeline dry natural gas supply with a low heat content range of 920 - 1200 btu/cu.ft. The engine shall be furnished by the generator set manufacturer with a gas train which shall include a secondary gas pressure regulator, pressure sensor, fuel filter, and flexible fuel inlet connection and electronic ignition system. The Installing Contractor, in coordination with the gas Utility, shall furnish and install a suitable sized primary gas regulator to be connected directly to utility natural gas supply and to the generator set engine fuel supply system. The primary regulator furnished by the Contractor shall allow the required natural gas flow, volume, and pressure to be continuously provided to the generator set engine at all times during all ranges of generator set operation, from no load to full load. The generator set shall be furnished with a fuel filter and secondary gas pressure regulator by the generator set manufacturer.

C. The generator set engine fuel system shall be integral with the engine. The engine's air intake, turbo charging system, engine governor and fuel control systems shall properly operate to receive and deliver industry standard pipeline natural gas fuel to the engine at rated engine horsepower and full rated generator output when operating on industry standard pipeline natural gas. The engine shall be equipped with individual cylinder detonation sensitive timing and electronically controlled fuel control valve and actuator with throttle valve. The engine shall be capable of properly operating at light loads for extended periods of time. Periodic cleaning of exhaust ports shall not be required. No overheating of any engine component or system shall occur when the generator set is operating at full rated load as installed inside of the furnished weather protective enclosure.

D. The Installing Contractor shall be responsible to provide and install all required gas supply system piping appurtenances such as piping knockdown / pressure reducing regulators, dry gas filters, pressure regulators, gas pressure relief valves and gages, and natural gas piping flexible connections, drains, and vents as applicable. This includes any gas system items required by the generator manufacturer, the Gas Utility and applicable AHJs necessary to provide a satisfactory, safe, and proper gas fuel supply system. Installing Contractor shall be responsible for all materials, costs, and services to provide and install the natural gas supply system to be connected to the generator set, including any AHJ required gas leakage monitoring and alarm systems.

E. The engine shall be equipped with lube oil filters, intake air filters, lube oil cooler, service meter, engine driven water pump, speed control governor, ignition and gas regulation and carburetion system, and unit mounted control panel and instruments. Controls shall include a water temperature gauge and lubrication oil pressure gauge. The engine shall be provided with automatic low oil pressure, high water temperature, overcrank, low coolant level, and over speed safety shutdowns. Each shutdown shall be of the manual reset type. Additional instruments and safety pre-alarms and shutdowns shall be provided as noted herein.

F. The engine lubrication system shall include an engine installed and driven mechanical positive displacement lubricating oil pump, full flow filtration with replaceable elements and a bypass valve to continue lubrication in the event of filter clogging, flexible oil lines and an oil cooler. The bypass valve shall be integral with the engine filter base or receptacle. The engine shall be furnished with generator set manufacturer furnished lubricating oil suitable for use with gaseous fueled engines. The generator set shall be equipped with an engine oil sump drain line with manual isolation shutoff drain valve extended to the outside of the generator set outdoor enclosure. Provide a stainless steel N.P.T. threaded cap cover on the end of the drain line outside of the enclosure. Identify the oil drain with a permanent nameplate.

G. The engine shall have a digital ignition system with an automatic fuel carburetor designed for use with natural gas. The timing system shall include an electronic magneto. The engine shall be equipped with a secondary gas pressure regulator to accept a natural gas fuel supply from the Contractor of between 7 – 11 in. H20 pressure and suitable for the flow, volume, pressure, and stabilization of natural gas required for continuous full load operation of the furnished generator set. Furnish an engine installed gas solenoid valve which shall be activated by the generator set controls to be automatically energized to open anytime the generator set is cranking and running and shall automatically close anytime the generator is shut down for any reason, either normally or in safety or emergency shutdown conditions. The valve is to be operated by the generator's DC battery starting / control voltage.

H. The engine shall be furnished with required electronic and air fuel ratio control equipment, exhaust three way catalytic converter, fuel delivery and detonation system, exhaust aftertreatment system, and other equipment and components as necessary to allow proper engine generator set operation and performance while complying with all US EPA regulatory exhaust emissions level requirements and standards for spark ignited gaseous fueled engines. The generator set engine shall be US EPA certified to comply with the applicable US EPA spark ignited engine exhaust emissions regulations for a stationary emergency standby operation engine generator set.

I. The engine shall be equipped with a coordinated emissions reduction and control equipment, including an air to fuel ratio controller if necessary, which shall be closed loop electronic microprocessor controlled and shall maintain the correct engine air to fuel ratio to assist in three way catalytic oxidation and reduction of the engine's exhaust emissions. Furnished air fuel ratio controller system shall include a feedback oxygen sensor and a fuel ratio control valve designed to adjust the fuel valve in order to maintain optimal oxygen content in the engine exhaust for emissions reductions by the 3-way catalytic converter if needed for generator set engine emissions regulatory compliance. The engine shall be fitted with the appropriate monitoring input oxygen sensors, gas system and engine performance sensors and thermocouples, and all required wiring harnesses necessary for a properly operating gas fuel operated engine generator set.

J. The Installing Contractor shall be responsible for the adequate and proper provision and supply of industrial pipeline natural gas fuel supply for the engine, including provision of the primary gas supply regulators, associated piping, natural gas rated flexible fuel connection for the gas supply system, and gas filters as required as per the generator set engine manufacture's recommendations. The Installing Contractor shall be required to coordinate with the generator supplier for Contractor provision of suitable gas system supply equipment and piping sizes, and the complete natural gas supply installation as necessary for provision of the furnished generator set required volume, pressure, flow, an stability requirement of natural gas fuel to the generator set engine in order to allow specified and satisfactory operation and performance of the generator set system at all times during all generator set loading conditions, from no load to full load.

K. The Installing Contractor shall also furnish and install a natural gas leakage sensing and monitoring alarm system to be installed within the generator weather protective enclosure which shall be acceptable to the applicable local AHJs. The Installing Contractor furnished gas leakage alarm system shall be responsible to coordinate with the generator supplier and provide an alarm that shall be integration coordinated and wiring interfaced with the generator set controls to provide local audible and visual gas leakage alarm annunciation at the generator set and also at the generator set remote annunicator panel. The Installing Contractor shall be responsible to provide all required electrical interface wiring requirements for the gas leakage monitoring and alarm system. All gas piping connections at the generator set engine are to be furnished and installed by the Installing Contractor and shall be flexible, stainless steel construction, approved for use with natural gas suitable for the supply and pressure use, and the complete gas system furnished as necessary for Engineer and AHJ approvals.

L. The Generator Supplier shall furnish one (1) pressure activated gas pressure switch for use in monitoring the furnished natural gas supply pressure and provide an alarm signal to the generator controls and the existing Remote Telemetry Unit (RTU) when the availability of acceptable gas supply pressure is low. The gas sensing pressure switch shall be mounted either on the generator set or within the generator enclosure and wired to the generator set alarms and RTU. The low gas pressure alarm shall be interfaced with the generator set's local alarm panel, RTU and the remote generator annunicator alarm panel by the Installing Contractor.

M. The generator supplier shall provide a gas inlet piping solenoid shutoff valve for the gas supply connection at the generator set engine. The valve shall be suitable and rated for use with natural gas and will be 24 VDC power operated for automatic open / close operation as controlled by the generator set start / stop control circuitry. The solenoid valve shall be automatically activated by the generator set controls to open, allowing the flow of natural gas to the engine at any and all times that the generator set is started and operating and the valve shall automatically be closed after the generator set has shut down. Valve deactivation timing controls shall be adjustable.

N. The engine will be equipped with a speed control as installed on the engine shall meet ISO 8528-5 Class 1 response and stability performance specification requirements and shall provide +/- 0.25% steady state frequency variation during steady state operating conditions from no load to full load.

O. The engine shall have a mechanically driven gear-type lubricating oil pump for supplying oil under pressure to main bearings, crank pin bearings, pistons, piston pins, timing gears,

camshaft bearings, valve rocker mechanism and governor. The engine shall be provided with an explosion relief valve for engine crankcase protection. Effective lubricating oil filters shall be provided and so located and connected that all oil being circulated is continuously filtered and cleaned. Filters shall be accessible, easily removed and cleaned and shall be equipped with a spring-loaded by-pass valve as an insurance against stopping of lubricating oil circulation in the event the filters become clogged. The engine shall have a suitable watercooled lubricating oil cooler. The generator set engine shall be furnished with the engine manufacturer furnished natural lubricating oil specifically formulated for natural gas engines.

P. The engine shall be provided with one (1) or two (2) engine mounted dry type combustion intake air cleaners of sufficient capacity to effectively protect the internal working parts of the engine from external dust and grit. Provide removable / replaceable air filter restriction indicators for each engine air intake filter.

Q. The generator set shall be furnished with an appropriate quantity of properly sized linear type vibration isolators to be installed between the engine-generator set and it's mounting frame base by the generator set manufacturer. The generator set's mounting frame base shall be bolt connected to the top of the outdoor enclosure structural steel mounting frame support base.

2.03 COOLING SYSTEM

A. The engine shall be furnished with a unit mounted radiator-type cooling system, including a closed loop radiator, engine driven blower fan and engine driven centrifugal coolant circulation transfer pump having sufficient capacity for cooling the engine when the diesel generator set is delivering full rated load in an exterior ambient temperature not to exceed 110 degrees F. The engine shall be provided with a thermostatic valve placed in the jacket water outlet between the engine and the cooling source. This valve shall maintain the proper engine jacket water temperature under all generator set operating load conditions. Total ventilation air restriction from the radiator shall not exceed 0.5 inches of water as installed inside of the furnished weather protective enclosure. Certification of this shall be included in the Shop Drawing Submittals by the generator Manufacturer. A flexible connecting section / shroud shall be provided between the radiator and enclosure radiator discharge air louver outlet frame to positively prevent the recirculation of heated radiator discharge air back into the generator enclosure.

B. The closed-circuit jacket water system shall be treated and furnished with a coolant conditioner and rust inhibitor as furnished by the engine Manufacturer. Heat rejected to the engine jacket water and after cooler shall be radiator driven air discharged to the atmosphere through a close-coupled radiator. The radiator shall properly cool the engine jacket water and after cooler water or engine charge air while the engine is operating at full load capacity within the generator room at maximum specified site temperature.

C. The generator set engine shall be furnished with an installed UL recognized engine coolant electric jacket water heater by the engine generator Manufacturer. The heater shall be complete with automatic thermostatic control suitably sized so as to maintain uniform engine coolant temperature of adjustable (75 -140°F) while the engine is idle. Jacket water heater system electrical power requirements shall not exceed 3KW. The heater shall be nominal 120 Volt AC single-phase and shall be electrically connected to a generator Manufacturer furnished and mounted heater contactor controlled by the heater's thermostat. AC supply

service power requirements for the heater and circulating pump shall be connected by the enclosure manufacturer to the generator enclosure installed AC load center furnished by the enclosure manufacturer. The heater and circulating pump shall be automatically de-energized by the generator set controls anytime that the engine runs. The heater shall be installed by the engine Manufacturer with manual isolation shutoff valves at each of the heater's hose connections at the engine in order to facilitate heater / heater hose maintenance without having to drain the engine coolant water.

D. An electronic coolant level sensor / alarm switch shall be furnished and installed in the radiator by the engine manufacturer for coolant level monitoring of an excessive low coolant level condition, for alarm indication on the generator control panel and for use by the generator set's automatic shutdown control circuitry.

E. The radiator fan, fan drive, and fan belts shall be totally enclosed and covered with protective guarding for personnel protection and shall be OSHA approved. The radiator cooling fan shall be a blower type and be mechanically direct driven from the engine. Air shall be drawn from the engine sides and top and exhausted through the radiator core to the generator enclosure radiator air discharge plenum for fan driven heated air flow to be directed to outside of the enclosure through the enclosure plenum without recirculation back into the enclosure.

F. Provide flexibly connected coolant water drain line with stainless steel construction manual shutoff valve terminated with a stainless steel N.P.T fitting and a threaded stainless steel cap. Coolant lines shall be high temperature, strength reinforced and with flexible connections. Provide a removable radiator pressure cap and radiator overflow line installed on the radiator.

2.04 GENERATOR, EXCITER AND ACCESSORIES

A. Rating: The generator set shall be the generator set manufacturer's standard factory rated, package, for use with industry standard pipeline natural gas, a minimum of 175 KW, 218 KVA, 0.8 P.F., 3 phase, 4 wire, 60 Hertz, 277/480 volts AC, and with a generator set manufacturer rated Class H insulation with a maximum rated temperature rise of 105 degrees C (both armature and field) by resistance at full rated standby power load in ambient air of 40 degrees Centigrade. The generator set's engine shall provide satisfactorily operating performance on the site furnished industry pipeline natural gas fuel supply. The Installing Contractor shall coordinate with the generator set supplier to ensure that the site provided natural gas supply, flow, volume, pressure, and stability to be delivered to the generator set fuel supply inlet by the Contractor connected gas supply system shall be suitable to allow the generator set to provide proper engine generator set performance during all ranges of generator set operation, from no load to full load.

B. Nameplates attached to the generator and exciter shall show the manufacturer's name, equipment identification including model and arrangement information, serial number, voltage ratings, field current ratings, KW / KVA power output ratings, power factor rating, time rating, temperature rise ratings, RPM ratings, full load current rating, number of phases and frequency, and date of manufacture.

C. Construction: The generator shall be mechanically driven by the generator set engine. As installed, the generator shall meet the applicable sections of the following standards:

National Electrical Manufacturers Association (NEMA) - NEMA MG1, Motors and Generators
Institute of Electrical and Electronic Engineers (IEEE) - IEEE 43, Recommended Practice for Insulation Testing of Large AC Rotating Machinery
International Electro Technical Commission (IEC) - IEC 34, Rotating Electric Machines

1. The generator and exciter shall be drip proof, with split sleeve, or ball race bearings. A shaft-mounted brushless exciter shall be a part of the assembly. The stator core shall be built up of high-grade silicon steel laminations precision punched, and individually insulated. Armature lamination followers and frame ribs shall be welded integral with the frames for support of the stator core. A directional blower shall be mounted on the unit to draw cooling air from the exciter and over the rotor poles and through generator housing louvered openings on the opposite end.

2. The generator stator winding pitch shall be 2/3 (0.667). The generator's stator, rotor, and exciter insulation system shall all be NEMA Class H as defined by NEMA MG1-1.65. The alternator insulation must be certified under UL 1446 Standard. Provide 100% epoxy varnish impregnation and a coat of epoxy asphalt insulating material to increase resistance to abrasive dust or sand, high humidity, and light acidic, oil, or salt-laden atmospheres, as well as to prevent fungus growth.

3. The generator permanent magnet generator (PMG) excitation system shall provide power to the generator automatic voltage regulator. The exciter shall be high frequency, direct connected, rotating brushless type, three-phase, full wave rectified, completely compatible with the furnished automatic voltage regulator. The rotating part of the exciter, including the rectifier assembly, shall rotate together with the generator rotor as a complete assembly on one shaft. Surge suppressors shall be included to protect the rotating diodes from abnormal transient voltage conditions. The harmonic distortion shall be less than 5%.

4. The generator shall, as a minimum, comply with the requirements of NEMA MG 1-22, IEC 34-1, ISO8528-3. Radio frequency noise suppression shall meet or exceed the requirements of MIL-STD-461. The generator shall be Manufacturer designed and prototype tested for 125% of rated speed capability without incurring damage

5. Generator stator and exciter stator windings shall be random r form wound with a Class H insulated system and manufacturer designed and constructed with a maximum 105 Deg. C generator temperature rise at the generator's full load standby rating. The generator temperature rise will be stamped by the generator set manufacturer on the generator nameplate attached to the furnished generator set. It shall be insulation treated for anti-abrasion and resistance to tropical environment of moisture and salt air. Generator coils shall be random, machine, or form wound, and precision made, with turn-to-turn and ground insulation of glass yard and mica materials. All spacers shall be tightly secured between end turns, and the end turn assembly securely lashed to the support rings.

6. Generator rotor poles shall be built up of individually insulated silicon steel punching. Poles shall be wound and bonded with high strength epoxy resin. Each pole shall be securely bolted to the rotor shaft with bolts sized for the centrifugal

forces on the rotor. Generator windings shall be braced for full line to ground fault currents, with solidly grounded neutral system. The generator shall be furnished with optimal coil pitch so as to minimize the harmful effects of generated harmonics when used with the Station loads.

7. The generator shall be provided with an appropriately selected ground fault sensing system utilizing current transformer and ground fault alarm sensing wired inside of the generator for ground fault alarm indication on the generator mounted control panel. Ground fault sensing shall be for alarm indication only. Sensed ground t shall not shunt trip open the generator set circuit breaker. Provide a ground fault alarm signal interface with the generator set local control panel and remote annunicator panel for alarm indication

D. Generator Voltage Regulator

1. The generator voltage regulator shall be furnished by the engine generator manufacturer and shall be automatic to maintain generator output voltage by controlling the current applied to the exciter field of the generator during generator set operation at all levels of the generator set's operating range.

2. The generator voltage regulator shall be a digital design with microprocessor control to allow for programmability based on the type of load connected.

3. The regulator shall be mounted within the generator or generator control section assembly, and shall be manually adjustable from the generator mounted control panel. The supplied voltage regulator shall be tested with the furnished generator set at the manufacturer's factory during the factory generator set testing as specified herein prior to shipment and shipped with the furnished generator set

4. The automatic voltage regulator shall be programmable, microprocessor based and shall incorporate the following characteristics/features:

   a. True RMS Line to line, three phase sensing of the generator output.
   b. Generator output voltage maintained within 0.25% at steady state conditions for any load variation between no load and full load.
   c. Generator output voltage drift no more than 0.25% of rated value within a 40° change over ambient temperature range of -40°C to 70°C.
   d. Telephone Influence Factor (TIF) of less than 50.
   e. Electronic Interference/Radio Frequency Interference (EMI/RFI) suppressed to commercial standards.
   f. Maintain voltage control +/- 0.5% with up to 40% total harmonic distortion (THD).

5. The generator regulator / excitation system shall include the following features:

   a. Overexcitation Protection: Shuts off generator output when excitation current exceeds normal operating currents for 15 seconds or instantaneous shutoff if output is shorted.
   b. Adjustable over and under voltage protection.

c. Adjustable under frequency protection.
d. True RMS 3-phase voltage monitoring.
e. Rotating diode monitor.
f. Solid state voltage build up: Integrates accessories into one convenient unit.
g. Voltage level rheostat to provide generator output voltage adjustment of -10% to +10% of nominal.
h. Gain adjustment 0 to 10% to provide output voltage compensation for changes in load or frequency.

E. The regulator shall not be damaged or result in unsafe operation when subjected to open or shorted input due to sensing loss, or a short to ground or adjacent conductor. This protective functionality is in addition to the specified main generator circuit breaker requirement,

F. Accessories and Attachments

1. Generator Circuit Breaker Junction Box: The generator set shall contain a separate properly sized main AC power circuit breaker box mounted on the generator set. The Installing Contractor shall coordinate proper electrical conductor and conduit foundation stub up locations on the generator set equipment site mounting foundation with the appropriate interface locations of the furnished generator equipment.

2. The generator set mounted AC circuit breaker shall be furnished and installed on the side of the generator set by the generator set manufacturer. The circuit breaker shall be UL Listed, 100 % rated, three-pole, fixed mount circuit breaker for the purpose of providing an AC electrical load circuit interrupting and protection device on the generator. The circuit breaker shall be an LSI unit of the amperage size and rating as shown on the Contract Drawings. The circuit breaker's electronic trip current sensors shall monitor each phase. It shall have adjustable long time and longtime delay during overload conditions, instantaneous magnetic tripping for short circuit protection, adjustable short time and short time delay and ground fault sensing features. Generator exciter field circuit breakers, overload and short circuit controls to trip out generator excitation or do not meet this generator breaker requirement and are not acceptable in lieu of the generator mounted circuit breaker providing air gap separation of breaker power contacts, no exceptions. The generator circuit breaker shall be furnished by the generator manufacturer mounted in a junction box on the generator end. An external stand-alone generator breaker, cubicle, or switchgear installed generator circuit breaker is not acceptable.

3. The generator circuit breaker shall have adjustable electronic long time, short time and instantaneous trip unit. A generator DC battery control voltage operated circuit breaker shunt trip coil shall be furnished to automatically trip open the circuit breaker concurrently with any generator set fault or emergency shutdown condition. The circuit breaker shall be furnished with a minimum of one (1) set of circuit breaker installed auxiliary circuit breaker open / close status dry contacts for signal interconnection with remote annunciation.

4. Provide a generator neutral conductor bus bar connection arrangement inside of the generator mounted circuit breaker enclosure connected to the generator neutral leads. The circuit breaker phase terminations and generator neutral bar assembly shall be furnished with conductor termination bus bars for attachment of Installing

Contractor furnished mechanical lugs suitable for proper connections with the quantities and sizes of the generator AC power conductors / conduits as shown on the Contract Drawings.

5. The generator shall have separated AC and DC low voltage terminal connection areas with suitably numbered terminal strip for all required wiring interconnections. wiring points for remote low AC and DC control voltage interconnections between the generator set and remote equipment shall be through a single junction box connection mounted on the side of the generator housing by the Manufacturer with installed and numbered terminal strips and terminal connections for all field interconnections.

6. The generator shall be equipped by the generator Manufacturer with an internally installed UL Listed 120 Volt AC single-phase alternator anti-condensation space heater appropriately sized to minimize condensation while the generator set is not operating. The heater shall be capable of easy mounting in the assembled generator and shall be field replaceable. The generator space heater shall be energized when the generator is idle and automatically cut off when the generator is running via generator controls. AC service power for the heater shall be wired to the enclosure installed AC load center by the enclosure manufacturer.

G. Generator Associated Controls:

1. The generator voltage regulator shall be furnished and installed in the generator by the engine generator Manufacturer and shall be automatic to maintain generator output voltage by controlling the current applied to the exciter field of the generator during generator set operation at all levels of the generator's operating range.

2. The generator set shall include an automatic voltage regulation system in a moisture proof assembly that is matched and prototype tested by the engine manufacturer with the generating system provided. Adjustments shall be broad range, and manual voltage level adjustment means shall be provided on the generator control panel face. Regulation shall be less than +/- 1 % no load to full load at steady state operation. Telephone Influence Factor (TIF) shall be less than 50. The supplied voltage regulator shall be tested with the furnished generator set at the Manufacturer's Factory during the Factory generator set testing as specified herein prior to Factory shipment.

3. Sustained Short Circuit: A permanent magnetic generator excitation system shall be provided on the generator by the generator manufacturer which shall be capable of maintaining field forcing of the generator in order to sustain 300% of rated generator current for 10 seconds when a 3 phase symmetrical short circuit is applied at the generator terminals permitting the generator breaker to trip open.

4. All wiring points for remote low AC and DC control voltage interconnections between the generator set and remote equipment shall be through a single junction box mounted on the side of the generator housing by the manufacturer with numbered terminal strips for all field interconnection wiring. The junction box shall have provisions for bottom conduit / power conductor entry.

2.05 GENERATOR OUTDOOR WEATHER PROTECTIVE SOUND ATTENUATED ENCLOSURE

A. ENGINE-GENERATOR BASE AND ENCLOSURE FLOOR

1. The engine, generator and radiator shall be mounted by the engine generator set manufacturer on top of a structural steel mounting support base to maintain generator set assembled rigidity and alignment. The engine-generator set and mounting base set shall then be installed on top of the outdoor enclosure structural steel construction mounting base frame with steel floor furnished by the enclosure manufacturer. The mounting base frame shall be designed and constructed to adequately support the static and dynamic weight of the generator set, the outdoor generator set equipment enclosure, and all miscellaneous accessory equipment items installed inside of the outdoor enclosure.

2. The generator set and outdoor weather protective enclosure assembly shall offer protection as specified by OSHA from all moving and hot parts of the engine, generator and radiator. The generator equipment weather protective enclosure as constructed and installed on top of the steel frame mounting base / floor shall allow full access to the engine, generator and radiator and interior installed accessory equipment items for proper operation, maintenance, and typical service actions.

3. The engine and generator shall be assembled by the engine generator set manufacturer on a fabricated common structural steel generator set mounting base. The base shall be constructed of heavy-duty structural steel designed and built to resist deflection and maintain alignment during skidding, lifting, generator set operation, and minimize resonant linear vibration during any range of generator set operation.

4. The generator set mounting base shall be designed and constructed to prevent unit deflection during the entire range of generator set operation designed as a package to be mounted on a level foundation surface.

5. The generator set shall be furnished with an appropriate quantity of generator manufacturer supplied vibration isolators to be installed between the engine generator set and it's generator set mounting rails which shall be bolt secured to the top of the outdoor enclosure mounting base floor Use of elastomeric pad or linear mount type vibration isolators in lieu of steel spring type isolators shall be acceptable.

6. The outdoor generator enclosure is to be furnished with an installed structural steel continuous steel floor foundation structurally designed and manufactured so as to support the weight of the enclosure, the installed generator set, and all generator set and enclosure accessory equipment items. The generator set shall be installed inside of the outdoor enclosure and bolt secured the top of the enclosure floor by the enclosure manufacturer prior to delivery to the site. The floor shall be constructed so as to dampen the transmission of destructive or harmful vibrations produced by the operating generator set, be removable from the enclosure, and shall allow lifting of the complete enclosure package with the generator set and all equipment installed. Provide suitably sized and support installed lifting rings or / eyelet plates on the outside of the floor base for four (4) point lifting of the entire assembled package.

The floor lifting means shall be physically located, relative to center of gravity of the assembled generator set / enclosure package, so as to allow crane single point with spreader bar lifting of the assembled package. The floor is to be properly cleaned, primed, and finish coated with weather resistant protective paint, both on top and the bottom. The enclosure steel floor shall be cleaned, primed, and finish painted with black satin enamel. Furnish suitably sized rectangular free air space stub up opening in the floor for bottom entry routing of generator electrical AC power conductors and conduits for connection to the generator set mounted circuit breaker junction box, and separate stub up openings for bottom entry of all required commercial AC service and DC/ AC control and remote annunciation interface wiring and conduit requirements.

7. The enclosure floor sides shall be constructed of steel I-Beams, minimum of 12 inches high and an appropriate quantity of cross support channels installed across the width of the floor underneath the generator mounting diamond plate steel floor in adequate locations. The mounting base shall be abrasive blast cleaned and shall be properly surface prepared and finish coated with Two Part Epoxy primer and painted Gloss Black in color.

8. The mounting base frame shall incorporate suitable internal stiffeners to create a smooth floor top surface and to limit the accumulation of water. The mounting floor shall be constructed with no sharp edges to insure uniform coating coverage on all surfaces. No external support beams shall be permitted on top of the tank

9. The mounting base frame base shall be constructed of structural steel and furnished as specified herein. The base frame shall be designed to rigidly support the static and dynamic weight of the engine-generator set and outdoor enclosure and all internal installed accessory equipment items. The mounting base frame shall also withstand the effects of synchronous vibration of the engine and generator. The mounting base frame shall be provided with suitable mounting holes for foundation anchor securement.

10. The steel frame mounting shall be provided with a rectangular free air space opening to be located directly under the installed generator set AC power connection junction box and an opening for wiring / conduit stub up of AC service power and Dc control interface wiring.

11. Provide mounting means and hardware on the top of the enclosure mounting base to install the generator set and the outdoor enclosure to the top of the base frame. Enclosure mounting frame bases requiring beams across the top to transfer the generator weight to the outer rails for support will not be acceptable.

12. The enclosure mounting frame base shall be provided with appropriate quantity of earthquake/hurricane resistant tie down restraint mounting points in adequate locations as required to support the structural steel base, the furnished generator set, and outdoor enclosure as an assembled package on the site foundation. The mounting frame base construction shall provide a means to control moisture accumulation under the base frame, and to allow visual fuel leakage inspection. The mounting support base frame shall be provided with mounting holes on both sides to allow for adequate securing of the base frame assembly onto the site's mounting

foundation. Provide a drawing indicating dimensional locations for mounting frame base foundation mounting securing points and recommended securement means.

13. The Installing Contractor shall be responsible to furnish all required mounting base frame to foundation mounting and securement hardware and installation services to properly install and secure the enclosure and mounting base frame onto the site's existing concrete foundation, provided it has been confirmed that the existing foundation is suitable for use with mounting of the generator set and enclosure equipment.

14. The Installing Contractor shall ensure that the site generator equipment foundation surface that the generator set equipment shall be installed upon shall be level at all locations on the foundation prior to installation of the outdoor enclosure equipment. Advise the Engineer of any foundation irregularities.

15. The Installing Contractor shall install the complete structural steel mounting frame base, generator set and outdoor enclosure as a packaged assembly on the site, as coordinated with and in accordance with the outdoor enclosure manufacturer's instructions.

16. The construction and size of the enclosure structural steel mounting base frame shall be coordinated with the Project Basis of Design and construction of the outdoor enclosure and furnished by the generator supplier as designed and manufactured by Coastline Power Solutions located in Deland, Florida, Fidelity Manufacturing located in Ocala, Florida, or approved equal. Detailed documentation and certifications by the enclosure manufacturer and generator supplier (EG vendor) indicating complete compliance with these Specifications and the Drawings are to be included in the EG vendor's submitted Shop Drawing Submittals and on the final generator equipment operating and maintenance manual documentation furnished to the Owner.

B. OUTDOOR ENCLOSURE

1. The generator supplier shall furnish one (1) reach-in type, aluminum construction, sound attenuated, wind and flying debris / large missile impact resistant outdoor weather protective enclosure to completely enclose the generator set and additional generator system auxiliary equipment as specified herein. The generator set and outdoor enclosure are to be installed and secured on top of a continuous floor type structural steel mounting frame base. The enclosure shall be sized large enough so as to allow operating and maintenance personnel adequate reach-in access to all of the enclosure installed generator set and accessory equipment items for operation and for normal maintenance purposes, including ready access to all fuses, circuit breakers, switches, batteries, and all manually operable devices, and shall provide all NEC and OSHA required installations and clearances. The engine exhaust silencer shall be mounted inside of the enclosure, no exceptions.

2. The enclosure and engine-generator set and structural steel frame base assembled package shall be complete in every detail and ready for operation after site installation. The enclosure exterior shall be finish coated white in color. The base frame shall be finish painted black in color. The enclosure is to be provided with a means for securely attaching the entire enclosure structure to the steel frame mounting base. The entire package shall be completely and securely assembled and all outdoor enclosure and/ generator set equipment wiring and

piping terminated in place by the enclosure manufacturer prior to shipment. And delivery to the Project site. The enclosure shall be provided with separate lifting provisions which shall have sufficient capacity suitable for lifting and rigging the entire enclosure assembly.

3. The entire generator set outdoor enclosure, installed generator set and mounting base frame assembly shall be manufactured in compliance with the National Electrical Code (NEC) and the National Fire Protection Association (NFPA). The enclosure Components Shall be Registered with the State of Florida and have approval numbers to certify the enclosure meets the requirements of the Florida Building Code. The furnished enclosure shall bear approved Florida Department of Business and Professional Development (DBPR) Modular Building Insignia.

4. The enclosure and mounting base frame assembly shall conform to the specified equipment design criteria. The generator enclosure package manufacturer shall provide calculations and written stamped certification by a Professional Engineer (P. E.), licensed in the state of Florida indicating that the furnished generator set enclosure is designed and constructed to meet the specified 200 mph wind rating and the applicable wind resistance requirements of ASCE 7-10 and the Florida Building Code (FBC) including the 2012 FBC supplement, the 2014 fifth edition of the FBC. As well as the 2017 FBC edition. Provide three (3) original copies the P.E. stamped certified wind load calculations and report, and enclosure drawings indicating compliance for the specific designed generator outdoor enclosure to be furnished for this Project prior to site delivery of the equipment. Copies of the P.E. calculations report and certification and P.E. stamped drawings are to be included in the Manufacturer's enclosure parts, operation and maintenance manuals to be furnished for the generator system.

5. The entire generator set outdoor enclosure and mounting base package with installed generator set assembly design and construction shall be in compliance with the National Electrical Code (NEC), the National Fire Protection Association (NFPA), and Occupational Safety and Health Administration (OSHA) including physical space clearances and protection around all electrical and mechanical equipment. The enclosure assembly shall conform to the equipment design criteria as specified herein and as shown on the Drawings. In addition, the enclosure manufacturer shall be listed as an approved vendor by the Florida Department of Business and Professional Development (DBPR) Modular Building Insignia The manufacturer's enclosure design to be furnished shall have been physically tested to demonstrate compliance by a State of Florida approved independent testing laboratory. Proof of the enclosure manufacturer's listing and enclosure construction design compliance with these requirements shall be included in the Shop Drawing Submittals, no exceptions.

6. The enclosure design and construction must comply with the requirements of these Specifications and with the requirements of the Florida Building Code (FBC). The enclosure shall be certified by a Professional Engineer (P. E.) that must be licensed in the state of Florida, to be designed and constructed to withstand a constant wind load resistance up to 170 MPH, shall be capable of withstanding a 200 MPH ultimate wind speed gust for three (3) seconds, with Exposure C criteria as per ASCE 7- 10 with FBC 2012 supplement, the 2014 fifth edition of the FBC, and the 2017 FBC edition. This 200 MPH wind loading resistance capability for the enclosure shall be included on the s drawings. The enclosure shall be certified by the enclosure manufacturer to meet the Miami Dade County High Velocity Hurricane Zone (HVHZ) missile impact ratings and compliances under Miami Dade Regulations no. 1624.2, 1626.2–1626.2.4, and section no. 1626 of the Florida Building Code. Enclosure equipment not complying with these construction and compliance requirements shall not be acceptable and shall be rejected in their entirety.

7. The outdoor enclosure shall be designed and constructed to reduce the average overall source noise / sound pressure level on the A scale produced by the furnished generator set operating at any range from no load to full rated load and rated speed as specified herein by a minimum level of 25 dB(A), reference 21 micro-newtons per square meter, at a distance of one (1) meter in a free field environment in any direction from the generator set weather protective enclosure at an elevation of 5 feet above ground level, measured in accordance with NEMA standards. This equipment compliance requirement shall be indicated on the enclosure manufacturer's drawings.

8. Enclosure construction shall include individual components generally consisting of a roof, two (2) side walls, and two (2) end walls using pre-painted white epoxy formed aluminum, enclosure mounted and secured intake and discharge openings. Fiberglass or equivalent non-asbestos acoustical insulation and securement linings on the interior walls of the enclosure shall be provided, and all exterior hardware shall be stainless steel. The complete exterior of the enclosure shall be painted white in color with urethane finish. Furnish the enclosure designed and constructed as specified herein and as shown on the Drawings.

9. All exposed metal parts of the enclosure and appurtenances shall be sanded, cleaned and primed with a rust inhibitor finished in a durable machinery enamel of the manufacturer's standard color. All necessary field touch-up shall be provided to have a complete finished appearance at the final inspection. All furnished outdoor components shall be suitable for outdoor installation without need for any additional protection from the weather.

10. The roof shall be constructed of 5052 – H32 marine grade mill finish 0.090 in. minimum thickness formed aluminum panels using an interlocking seam design. Roof shall be designed and constructed to support no less than 30 pounds per square foot. The roof top skin shall be painted the same color (white) as the enclosure. The roof is to be bolted to both side and end walls to form a complete weather and wind resistance assembly. A weatherproof mastic / sealant shall be used along the roof perimeter and any roof skin joints. All external roof attaching hardware shall be stainless steel screw type mechanical fastener utilizing neoprene watertight washers. Roof assembly shall be peaked to aid in rainwater runoff. Cambered roof designs and roofs with thicknesses of less than 0.090" nominally shall not be considered. Roof assemblies are to be mechanically fastened to the vertical wall sections. Glued or crimped roofs shall not be allowed nor considered as an acceptable alternative.

11. The generator set exhaust piping shall be vertically terminated through the roof of the outdoor enclosure. Generator set aftertreatment / catalyst and exhaust silencer equipment shall be installed inside of the enclosure with no exceptions on this requirement being allowed. Exhaust catalyst and silencer equipment mounting hardware shall maintain the weatherproof integrity of the enclosure system. The enclosure roof shall incorporate an internally installed and removable aluminum or stainless steel construction rain collar and rain shield for the generator exhaust silencer piping at the roof penetration point to prevent the entry of rainwater into the enclosure and allow for expansion and vibration of the exhaust piping without stress to the exhaust system. Rain shields shall be designed and furnished as a circular fabricated part that does not require hole indexing by the installing Contractor during site installation. An exhaust piping aluminum construction counter weighted rain cap shall be installed on the vertical discharge piping termination points of the exhaust gases.

12. The enclosure side and end walls shall be manufactured utilizing formed 0.090 inch minimum thickness prepainted aluminum formed panels utilizing an interlocking seam

design. Framing shall be incorporated in the panels by forming an open back box structure. Skin material shall be minimum thickness .090" marine grade aluminum. Enclosure shall have a prepainted Urethane finish for maximum corrosion resistance. Exterior skin panels shall be integral to the wall structure and not separate pieces riveted onto framing members. Wall panels shall be no wider than 36" each and shall be removable without the use of special tools. Wall and roof panels shall be designed so that field replacement can be accomplished without disassembly of the entire structure if damage or replacement actions should occur.

13. All external attaching hardware shall be stainless steel screw type mechanical fasteners. The enclosure shall be fastened to the enclosure mounting base frame by the enclosure manufacturer by means of an aluminum base channel and stainless steel hardware and clips that are welded to the mounting frame base and bolted to the base channel with stainless steel bolts, washers, and nuts. The base channel shall include enclosure water drainage construction.

14. The radiator discharge end wall section shall incorporate a properly sized opening for the furnished generator set radiator discharge core / opening and shall include appropriately furnished and installed shroud or baffle assemblies to prevent the recirculation of radiator discharge air into the enclosure.

15. Thermal acoustic insulation of non-asbestos material or fiberglass insulation, with fire retardant properties shall be installed on all interior walls and ceiling roof of the enclosure. Insulation shall not be less than two (2) inches in thickness. Acoustical insulation material on interior roof and all walls is to be mechanically held in place by 0.032" mill finished perforated aluminum secured to the enclosure interior and provided with tuned engineered hole diameter for optimum sound attenuation. Interior perforated aluminum material shall protect the insulation material as well as allow noise to permeate the absorptive material Provide thickness of sound attenuation material as required to meet the noise level requirements specified for the enclosure.

16. The generator ventilation intake air shall enter the enclosure through enclosure side and / or end mounted intake missile impact rated louvered openings with bird screen coverings. Include sound attenuation baffles as required which shall be securely mountable to the interior of the louvered intake openings on the enclosure. The enclosure air intake system shall be designed and constructed to minimize water penetration into the enclosure during heavy rainfall and be constructed for automatic drainage of falling rain water into the plenum to the outside of the enclosure. Enclosure side mounted intake hoods protruding out from the sides or the end of the enclosure are not acceptable. The cooling air Inlet system shall prevent water intrusion into the enclosure with the generator set operating at full rated load while allowing for a maximum air restriction of less than 0.24" H2O. Maximum design enclosure ventilation air flow velocity through the enclosure shall not exceed 1,200 FPM and shall not exceed the maximum water penetration velocity rating for the intake louvers at any time during generator set operation. The enclosure manufacturer shall submit airflow calculations for confirmation of these requirements.

17. The radiator air shall be vertically discharged through enclosure end wall gravity operated aluminum construction dampers from the enclosure through the top of an enclosure end mounted air discharge plenum which shall be of the same material and construction as the enclosure. The radiator front face shall be sealed to the front wall utilizing and 2" minimum rubber gasket material to minimize recirculation of radiator air discharge and prevent the

transmission of vibration from the packaged generator set to the enclosure. The air discharge plenum shall be furnished with a deflector plate and a bottom drain extension line for prevention of falling water entry into the enclosure and for rainwater drain and removal from the plenum. Air discharge devices shall in no event excessively restrict generator set ventilation airflow during all ranges of generator set operation, from no load to full load. Provide an installed removable plenum access plate. Provide bird screen over the top of the open end of the discharge plenum. The combined air inlet and discharge system shall be designed to maintain a combined total static pressure restriction of no more than 0.48 inches of water gauge (H2O) the enclosure with the generator set operating at full rated load and duty. Both Intake and discharge louvered openings and plenums shall be provided with removable bird/rodent screening to prevent the entrance of debris, birds, rodents and other vermin.

18. The enclosure shall incorporate a minimum of two (2) personnel access door openings that shall be located on <u>each</u> side of the enclosure for a total of a minimum of four (4) enclosure installed doors for enclosure personnel access into the enclosure for generator set operation, service, and maintenance actions. One of the doors on the enclosure shall be located directly in front of the generator side mounted main AC power circuit breaker junction box. Applicable NEC clearances shall be maintained throughout the enclosure. Enclosure doors shall be no less than 36 inches wide. Doors shall be manufactured of the same material as enclosure and installed into aluminum frames. Doors shall be fully gasketed to form a weather tight perimeter seal. Door hinges shall be full length stainless steel piano type and shall be attached with stainless steel hardware. Door handles shall be of a corrosion resistant material and shall include panic hardware and provide for a lockable from the outside, secure entry point into the enclosure. Doors shall be insulated with no less insulation than is provided in the enclosure walls for sound attenuation. Each door shall include “holdback” hardware and restraints to secure the door to the enclosure side wall when the door is opened fully. Include door handle strike plates on the enclosure walls adjacent to the door to provide impact protection from the door handle. Rain gutters that shall channel rainwater away from the top of the enclosure door opening shall be provided for the top of all doors.

19. All exterior components of the enclosure shall be assembled utilizing 0.375 inch minimum stainless steel bolts or screw fasteners, nuts, and lock washers. In addition, watertight neoprene flat washers shall be used on all roof bolts.

20. The enclosure manufacturer shall provide all required hangars, supports, mounting materials and hardware for the generator set exhaust catalyst, silencer, and exhaust piping installed inside of the enclosure. Provide insulation around the exhaust piping sections that are physically located inside of the generator enclosure. The exhaust muffler shall be shipped to the site installed by the enclosure manufacturer inside of the enclosure, located so as to be readily and properly connected to the engine’s stainless steel exhaust flexible connector. The silencer shall be fitted with an NPT threaded drain connection and piped to the outside of the enclosure by the enclosure manufacturer. Silencer drain piping shall be fitted with a stainless steel construction fluid suitable manual isolation valve. Generator set engine oil and coolant rain lines shall be extended to the outside of the enclosure.

21. The generator set high sound attenuation exhaust muffler and associated piping system size and type is to be furnished and installed by the enclosure manufacturer so as not to exceed the engine manufacturer’s published maximum exhaust flow restriction values, and to provide the specified enclosure sound level attenuation. Refer to the exhaust silencer section of these Specifications for additional exhaust silencer system requirements.

22. The enclosure shall be manufactured to be finish coated with a long lasting epoxy coating finish to prevent oxidation and maintain the paint finish.

23. The engine's crankcase fumes disposal hoses shall be extended and routed to the interior of the radiator air discharge plenum by the enclosure manufacturer.

24. Primary AC electrical service power provision and wiring connections to the outdoor enclosure for all accessory AC electrically powered generator set and enclosure equipment items is to be furnished by the Installing Contractor. The enclosure manufacturer shall be responsible to provide and install all required electrical interconnection wiring in EMT or flexible conduit with compression fittings between the AC electrically powered equipment and enclosure interior installed AC junction boxes.

25. Provide two (2) LED lights with covered fixtures installed within the enclosure, and strategically located above the installed generator set control panel. The light fixture shall be ceiling mounted and properly secured against harmful heat and vibrations. Provide and install two (2) light control switches to be located on the inside of the enclosure adjacent to the enclosure door located at the generator end of the enclosure. Provide and install one (1)) GFCI duplex receptacle on the interior of the generator enclosure with weather resistant cover. Receptacle shall be mounted near one of the enclosure interior light switches.

26. Provide one (1) separate cover protected DC powered light bulb installed within vapor proof type protective covered fixture and mounted on the interior roof of the enclosure in locations above the generator's control panel, away from damaging heat, and secured against harmful vibrations. The light is to be connected to a manually operated automatic 0-60minute timer switch, labeled "DC Light", installed inside the enclosure adjacent to one of the generator end enclosure doors. The DC light shall be appropriately fused and wired to the generator set's starting/control battery power in conduit by the enclosure manufacturer. The light shall be large enough to provide adequate illumination for the generator control panel in an emergency situation yet not such that overburdening drain shall be placed on the generator set starting battery system.

27. The installing Contractor shall be responsible to provide the required primary AC electrical services to the enclosure installed AC junction boxes for use with service electrical power to all required generator and enclosure AC electrical equipment. The enclosure manufacturer shall wire all enclosure interior AC electrical items in EMT / or flexible conduit to the AC load center. Any junction boxes used shall be NEMA 3R rated construction.

28. Generator AC power cables and conduits shall enter the enclosure from the bottom of the enclosure mounting frame base through a cable stub up opening which shall be located under the installed generator mounted circuit breaker junction boxes. All of the generator system control and signal wiring for interface with the remote electrical transfer equipment, AC electrical services, remote controls and annunciation requirements shall be furnished, installed, and terminated by the Installing Contractor.

29. The Installing Contractor shall be responsible to furnish suitably sized and constructed concrete foundation for the furnished complete assembled generator set enclosure package.

30. The generator set equipment outdoor enclosure shall be furnished by the generator supplier as designed and manufactured by Coastline Power Solutions located in Deland, Florida, Fidelity Manufacturing located in Ocala, Florida, or approved equal. Any proposed provision

of an alternate enclosure manufacturer shall require detailed documentation and certifications indicating complete compliance with these Specifications and the Drawings including the overall dimensions of the enclosure and mounting frame base package and the enclosure and door sizes to be included in the Shop Drawing submittals for Engineer review and approval.

2.06 EXHAUST SYSTEM

A. The engine exhaust system shall be installed to discharge combustion gases quickly and silently. The exhaust system including the generator set engine exhaust silencer and all exhaust treatment equipment and piping shall be designed for minimum restriction, and in no case shall the total exhaust system backpressure restriction imposed on the engine at full operating load exceed the engine manufacturer's maximum allowable exhaust backpressure.

B. The exhaust silencer and all exhaust catalyst aftertreatment system equipment shall be installed inside of the generator set outdoor weather protective enclosure above the installed generator set. Exhaust equipment located or installed outside of the generator enclosure shall not be acceptable. Installation shall account for thermal growth of the exhaust system during generator set operation. All piping, flanges, gaskets, fittings, hardware and insulation required for the generator set exhaust system installed inside of the generator enclosure shall be furnished and installed by the enclosure manufacturer. All exhaust piping shall be Schedule 40 steel piping.

C. All portions of the exhaust system installed inside of the generator set enclosure area shall be covered with appropriate high temperature resistant insulation and shielding inside of the enclosure, suitable for use with the maximum temperature possible from the generator set exhaust system. Exhaust components installed inside of the enclosure discharge plenum need not be insulated. The exhaust muffler and all enclosure interior installed piping shall be insulated / lagged so that the surface temperature does not exceed 175 degrees F. Any enclosure interior installed exhaust piping insulation used shall not contain any asbestos or asbestos bearing products Insulation shall not interfere with the functioning of the engine flexible exhaust connector and allow for compensation for exhaust system thermal and vibrational movements. All exhaust piping and exhaust system insulation shall be furnished and installed by the muffler and enclosure manufacturer

D. The spark ignited engine shall be furnished with an emissions treatment means including use of any catalytic exhaust aftertreatment / converter system designed to for exhaust oxidation and emissions reduction through simultaneous conversion to reduce nitrogen oxides (NOx), carbon monoxide (CO), hydrocarbons (HC), and Volatile Organic Compounds (VOC) in the engine exhaust emissions levels for the engine complying with the applicable US EPA emission regulations and standards for spark ignited engines. The exhaust treatment system and exhaust silencer equipment utilized with the furnished engine generator set shall be sized to maintain exhaust backpressure below the engine manufacturer's listed maximum allowable restriction for the furnished natural gas fueled engine when used in conjunction with the exhaust silencer and connected exhaust piping system throughout all ranges of generator set loading operation, from no load to full load.

E. The generator exhaust silencer exhaust piping outlet shall be terminated vertically outside of the enclosure and furnished with a stainless steel or aluminum construction counterweighted exhaust piping rain cap. The exhaust silencer and associated piping shall be installation supported and braced to prevent weight or thermal growth from being transferred to the engine. Flexible expansion fittings shall be provided to accommodate thermal growth.

Support dampers and springs shall be included where necessary to isolate harmful vibrations. All exhaust system piping, insulation materials, and installation of the entire exhaust system shall be provided by the generator enclosure Manufacturer.

F. The exhaust silencer (muffler) shall be minimum of "hospital" grade to provide extreme noise attenuation for environments with low background noise where slight noise emissions would be objectionable. The exhaust silencer can be combined with use of a generator set manufacturer furnished catalytic converter system. The silencer shall be prime painted with high temperature finish coating and capable of up to a 35-42 d(B)A attenuation at between 125 and 2000 Hz octave band center frequencies. The exhaust silencer shall be selected so that the generator set engine full load operation exhaust sound levels around the enclosure shall not exceed the maximum sound level specified for the generator outdoor enclosure if specified. Furnish an appropriately sized stainless steel bellows type engine expansion flex connector for connection to the engine exhaust outlet.

G. The exhaust silencer body shall be furnished with a N.P.T. drain fitting. The exhaust muffler and exhaust piping from the muffler shall be extended with a slight pitch downward to facilitate exhaust silencer and piping drainage. The muffler drain shall be piped by the enclosure manufacturer to the outside of the enclosure and provided with a stainless steel construction manual shutoff isolation valve installed inside of the enclosure. The muffler water drain line shall be flexibly terminated on the outside of the enclosure with a stainless steel N.P.T fitting and stainless steel threaded cap.

2.07 STARTING CONTROL SYSTEM

A. Automatic Control - Fully automatic and manual engine start-stop controls in the generator control panel shall be provided. Controls shall provide automatic shutdown of the engine/generator set for low oil pressure, high water temperature, over speed, overcrank, and loss of low engine coolant conditions. Alarms for approaching high water temperature, impending low oil pressure, low supply gas pressure, and all other alarms as specified herein shall also be included. Controls shall include a 90 -second single cranking cycle limit with lockout and be adjustable for a multiple cyclic crank system with lockout and overcrank protection. The system shall be capable of crank starting a properly equipped engine so as to allow engine cranking termination to occur as necessary for the generator set to consistently achieve satisfactory operating speed within 10 seconds anywhere between the specified minimum and maximum site ambient temperature range. Automatic adjustable crank cycle and termination control logic and circuitry shall be furnished on the engine.

B. The generator controls shall allow manual operation of start and stop operation of the generator set as specified herein.

C. The generator set engine shall be equipped with a 24 VDC electric starting motor system which shall include a solenoid shift positive engagement starting motor and starter relay, an engine driven battery charging alternator, a generator set starting / control battery bank, an automatic battery charger and automatic reset circuit breaker to protect against excessive pinion gear butt engagement. The starting motor shall be capable of providing sufficient engine generator set cranking for a minimum of 90 consecutive seconds without damage to the starting motor, engine starting system, or engine. The system shall be capable of crank starting the furnished engine generator set so as to allow crank termination to occur as necessary for the generator set to consistently achieve proper rated operating speed within 10 seconds anywhere between the specified minimum and maximum site ambient temperatures.

Automatic adjustable crank cycle and termination control logic and circuitry shall be furnished on the engine.

D. Furnish an engine manufacturer installed DC, minimum of 45 ampere rated battery charging alternator with a transistorized voltage regulator. The engine mounted battery charging alternator and belt assembly is to be furnished with an OSHA approved guards.

E. Batteries for starting and control shall be a heavy duty, low-maintenance, electrolyte accessible, housed in a hard rubber or polypropylene case with provision for venting. Provide two (2) 12 VDC batteries utilizing parallel electrical interconnections. Generator set starting and control power batteries shall be 24 Volt DC and sized / rated based on specific application requirements of engine oil viscosity, ambient starting temperature, control voltage, overcharging and vibration., but in no case shall each battery be manufacturer rated at less than 1,000 cold cranking amperes for 30 seconds at 0 Deg. F and with a 90 AH capacity at the 20 hour rate. The battery shall be sufficient for cranking the engine for a minimum of 15 seconds per each of up to six (6) cranking cycles at firing speed with ambient temperature of 32 degrees F. Batteries shall have engine starting cranking amperage capacity adequate to provide a minimum of 90 seconds of continuous generator set cranking without overheating, distorting, or damaging any equipment.

F. The generator set batteries shall be located as close to the starting motor as practical, away from spark sources, in a relatively cool and ambient, and permit easy inspection and maintenance. The batteries shall be housed on an acid resistant frame, or box, which shall allow full flow air ventilation and provide for electrolyte containment. Required insulated battery cables and clamps shall be provided and sized to satisfy engine generator set starting and control circuit requirements.

G. A solid state, constant voltage automatic battery charger, UL Listed, designed for use with lead acid batteries shall be provided of the current limiting type, designed for float charging, with an automatic and manual adjustable equalize charge timer. It shall accept 120 Volt AC, single-phase input. The charger shall be sized so as to provide 24 Volt DC, minimum of ten (10) Ampere output. It shall be fused on the AC input and DC output and incorporate current limiting circuitry. The charger shall include an AC power monitor with light, a 1% accuracy DC ammeter and DC voltmeter. The charger shall be furnished with alarms for charger failure/malfunction, low battery voltage, and high battery voltage, with individual local alarm light indications and dry alarm contacts for each alarm wired to the generator DC control interconnection junction box for remote annunciation use. The charger shall be housed in a NEMA 1 enclosure suitable for wall mounting and installed inside of the generator weather protective enclosure by the generator supplier. AC electrical power for the battery charger shall be wired to the generator outdoor enclosure AC load center panel by the enclosure manufacturer. Charger low battery voltage, high battery voltage, and charger failure alarms shall be wired to the generator set control and alarms by the enclosure manufacturer.

2.08 GENERATOR CONTROL PANEL

A. Generator Set Control: The generator set shall be provided with a microprocessor-based control system that is UL508 Listed and designed to provide automatic starting, monitoring, and control functions for the generator set. The control system shall also be designed to allow local monitoring and control of the generator set, and remote monitoring and control as described in this specification. The control shall be mounted on the generator set. The control

shall be vibration isolated and prototype tested to verify the durability of all components in the system under the vibration conditions encountered. Generator control panel shall be Caterpillar model EMCP 4.2B, with all standard features, or approved equal. The generator set mounted control shall include, but not necessarily be limited to, the all features and functions as indicated herein.

B. Control Switches / Keys

1. Mode Selection Switch or Keys: The four position mode select switch or Mode keys shall initiate the following control modes. When in the RUN or Manual Start position, the generator set shall start, and accelerate to rated speed and voltage as directed by the operator and be ready for manual transfer. In the STOP position, the generator set shall stop after a programmable cool down period has elapsed. In the OFF-RESET position, the generator set shall immediately stop, bypassing all time delays and the generator control panel fault lights are reset if the fault condition no longer exists. In the AUTO position the generator set shall be ready to accept a signal from the manual transfer switch or a remote device to start and accelerate to rated speed and voltage when the signal is issued, and shutdown when the signal is removed.

2. EMERGENCY STOP switch: Switch shall be a red maintained push-button with glass cover and small hammer. Depressing the emergency stop switch shall cause the generator set to immediately shutdown while simultaneously activating the generator circuit breaker shunt trip and a generator control panel fault alarm light, and be locked out from automatic restarting.

3. PANEL LAMP Switch: Depressing the panel lamp switch shall cause the entire panel to be lighted with DC control power. The panel lamps shall automatically be switched off 10 minutes after the switch is depressed, or after the switch is depressed a second time.

C. Generator Set AC Output Metering. The generator set shall be provided with a metering set including the following features and functions:

1. Digital (LCD) metering set, 1.0 % accuracy, to indicate generator true output RMS voltage, current, and frequency. Generator output voltage shall be available in line-to-line and line-to-neutral voltages. The digital metering equipment shall be controlled by a single microprocessor to provide consistent readings and performance.

D. Generator Set Alarm and Status Display

1. The generator set shall be provided with alarm and status indicating lamps to indicate non-automatic generator status, and existing warning and shutdown conditions. The lamps shall be high-intensity LED type. The lamp condition shall be clearly apparent under bright room lighting conditions.

2. The generator set control shall separately, via LED lamps, indicate the existence of the following alarm and shutdown conditions:

- Low oil pressure (alarm)
- Low oil pressure (shutdown)
- Low coolant temperature (alarm)
- High coolant temperature (alarm)
- High coolant temperature (shutdown)
- Low coolant level (alarm or shutdown--selectable)
- Fail to start/overcrank (shutdown)
- Overspeed (shutdown)
- Low DC voltage (alarm)
- Low natural gas supply pressure (alarm)
- Emergency stop (shutdown)
- Gas leakage (alarm) - (from Contractor furnished equipment)
- High engine exhaust temperature (alarm)
- High engine exhaust temperature (shutdown)

E. Engine Status Monitoring

1. The following information shall be available from a digital status panel on the generator set control:

   - engine oil pressure (psi or kPA)
   - engine coolant temperature (degrees F or C)
   - engine oil temperature (degrees F or C)
   - engine speed (rpm)
   - number of hours of operation (hours)
   - battery voltage (DC volts)

F. Engine Control Functions

1. The control system provided shall include a programmable cycle cranking system, which allows for user selected crank time, rest time, and number of cycles. Initial settings shall be for 3 cranking periods of adjustable 10-15 seconds each, with 10-15-second rest period between cranking periods. If the engine has not started by the end of the cranking period, the generator set shall automatically shut down and activate the Fail to Crank light.

2. The generator control panel shall have capability of providing communication via Modbus RTU (RS-485 Half duplex). The generator control panel shall be communication interfaced with the remote generator set annunciator panel.

3. Generator control system shall incorporate adjustable cool down generator stop controls that will allow the generator to continue to run when the remote start / run signal is removed for an adjustable 5 – 60 minutes. At the end of the selected time period, the generator set shall automatically shut down and be automatically ready to restart upon return of the remote generator set start / run signal.

4. Generator protection shall be provided for the following:
   a. Over/Under voltage
   b. Over/Under frequency
   c. Over current

d. Current balance
e. Over/Loss of excitation
f. Generator phase sequence

5. The generator set manufacturer furnished generator set control panel shall be provided with NEC / NFPA 70 compliant adjustable Arc Flash energy reducing maintenance mode functionality. Details of this provision shall be included in the generator set equipment shop drawing submittals.

G. Remote Annunciator Panel

1. The generator Supplier shall furnish one (1) generator battery DC voltage powered multiple LED light remote generator alarm annunciation panel for remote generator system status monitoring. Remote annunicator panel communications shall be via RS485 communications serial data link, fully isolated twisted pair with shield cabling to be furnished and installed by the Installing Contractor. The installing Contractor shall install the remote annunciator and coordinate the electrical wiring and communications interface requirements with the generator supplier.

2. The remote annunciation panel shall be provided with alarm horn and silence switch, located as indicated on the Drawings, and in compliance with NFPA 110, Level 1 requirements. The remote annunciation shall provide the following audible and visual alarms or status indications:

Lamp Legend	Generator Set Condition Indicated	Light	Alarm Audible
High / Low Battery Voltage	- Battery voltage too high or too low	Red	No
Generator On Line	-Generator set supplying the load(from ATS)	Green	Yes
Pre-Low Oil Pressure	- Oil pressure approaching low limit	Yellow	Yes
Low Oil Pressure	- Generator shut down due to low oil pressure	Red	Yes
Pre-High Coolant Temp	- Coolant temp. approaching high limit	Yellow	Yes
High Coolant Temp	- Generator has shut down due to high engine coolant temperature	Red	Yes
Low coolant Temp	- Engine heater has malfunctioned	Yellow	Yes
Low coolant level	- Excessive loss of engine coolant	Red	Yes
Overspeed	- Engine has shut down due to overspeed	Red	Yes
Overcrank	- Engine failed to start	Red	Yes
Not in Auto	- Engine control switch not in AUTO position	Flashing	Yes
Low natural gas pressure	– (from Contractor)	Red	Yes
Battery Charger Fail	- Battery charger is signaling a failure	Red	Yes
Generator Circuit Breaker Open	– Circuit breaker status	Yellow	Yes
Emergency Stop	- Generator has been emergency stopped	Red	Yes
Engine RPM Loss	– Improper engine RPM	Red	Yes
Generator running	– Generator set is running	Yellow	No
Generator Power (from ATS)	– Generator on line	Yellow	No
Natural Gas Fuel Leak (from Contractor)		Red	Yes

3. Provisions for labeling of the annunciation in a fashion consistent with the specified functions shall be provided. Alarm silence and lamp test switch shall be provided on the panel. Alarm horn (when switched on) shall sound for first fault, and all subsequent faults, regardless of whether first fault has been cleared.

4. The remote annunciator shall be powered from the generator set's starting / control battery. Installation of the annunciator panel and all electrical power and signal interconnections requirements between the generator system equipment, the transfer switch equipment, the generator remote annunciation panel, and other required remote annunciation signals shall be furnished by the Installing Electrical Contractor. The Generator Supplier shall provide project specific electrical point to point wiring schematics for electrical interface connection for all of the remote annunciation signals.

PART 3 – EXECUTION

3.01 FACTORY TESTING

A. The engine-generator set manufacturer shall perform factory testing and quality control inspections on the engine-generator set provided prior to factory shipment. A certified report of these tests and inspections shall be submitted to the Engineer prior to delivery of the generator set to the site.

B. The engine, generator, and engine-generator set shall be subjected to standard factory testing and quality control inspections to insure reliable operation. These tests and inspections shall include, but not necessarily be limited to, the following

a. Factory testing at the generator set's nameplate power rating and power factor utilizing natural gas fuel to confirm baseline data with recording of each of the following:

1) Voltage (each of three phases and average)
2) Amperage (each of three phases and average)
3) KW output
4) Power Factor
5) Frequency
6) Engine Speed

b. The load bank used for testing shall be reactive, allowing generator set testing to be performed at generator set nameplate 0.8 power factor. Testing of the generator set at the factory shall not be dependent on the generator control instruments to read amperage and voltage on each phase. Rather, the test instrumentation shall serve as a check of the generator set meters. Confirmation of comparable readings of the generator control panel display parameters with the load bank testing instrumentation shall be indicated on the furnished factory test reports Rated engine speed.

c. The generator manufacturers certified Factory test report of the factory testing and inspection shall be submitted to the Engineer for approval prior to delivery of the unit to the project site. Copies of the factory test report for the furnished generator set shall also be included in the generator supplier furnished generator set equipment Parts, Operation and Maintenance manuals.

C. Generator set manufacturer certified test report of the factory testing and inspection shall be submitted prior to delivery of the generator set to the project site. A minimum six (6) copies shall be provided.

D. Natural gas and all consumables and equipment necessary for Factory testing shall be furnished by the generator set manufacturer. Any generator set equipment defects or operational deficiencies which become evident during the Factory testing shall be corrected by the manufacturer at their own expense prior to shipment of the equipment

3.02 SERVICES

A. Furnish the site services of a competent and experienced generator set Manufacturer's field service technician who has complete knowledge of proper installation, startup, testing, and operation and maintenance of the equipment for a period of not less than four (4) days in separate visits to inspect the installed equipment, supervise the initial generator equipment startup and test run and load bank test the generator set, commission, demonstrate proper operation of the entire generator system, and to provide instructions to the Owner's personnel.

B. Three (3) Engineer final approved copies of the generator system parts, operation and maintenance manuals specified must be delivered to the Engineer prior to scheduling the instruction period with the Owner.

3.03 FIELD QUALITY CONTROL

A. The Installing Contractor shall confirm that the generator set, enclosure, and transfer switch equipment concrete foundation installation pads are, suitably sized, level, and free of irregularities.

B. The complete installation shall be checked for procedural and operational compliance by technical representatives of the engine-generator set supplier. Any observed or determined deficiencies shall be corrected by the Installing Contractor.

C. The Generator Supplier shall perform start-up procedures, system checks, adjusting, and site testing required after the installation is complete. The Installing Contractor shall be responsible to ensure adequate natural gas supply, volume and pressure is available at the generator set gas supply at all times, though all generator set loading ranges of operation.

D. The engine lubricating oil and coolant conditioner, as recommended by the engine manufacturer, shall be provided by the generator supplier and installed in the furnished generator sets.

3.04 DELIVERY INSPECTIONS

A. The Installing Contractor shall examine and confirm that the site delivery areas to receive the generator system equipment is free of obstructions, debris, and moisture, and that adequate delivery and storage space, clearances for delivery, offloading, and installation of the generator system equipment is available at the time of generator system equipment delivery.

B. The Installing Contractor shall be responsible to coordinate the site delivery and installation of all generator system equipment to allow timely and proper and safe movement into the

site's designated storage and installation spaces. The generator set equipment shall not be delivered to the project site by the generator equipment manufacturer or generator supplier until requested to be by the Installing Contractor. The generator supplier shall be responsible for proper storage and delivery of all of the generator system equipment pending the Contractor's request and instructions for site delivery. If the Installing Contractor is not ready to accept site delivery of the generator system equipment after it is manufactured and ready to be shipped from the manufacturer, the generator supplier shall be responsible for any associated storage requirements and any delayed site transportation and site delivery costs of the generator system equipment including the generator sets, normal and distribution switchgear, generator paralleling and control switchgear. The Installing Contractor shall be responsible for all required equipment offloading, rigging, and installation actions for all site delivered generator system equipment.

C. All generator system accessory equipment shall be site delivered by the generator supplier vendor. The Installing Contractor shall remove and replace any access fencing, doors, lift-out panels, and structures to provide pathway for moving the generator system equipment into place and ensure that the delivered generator equipment can be moved on the project site past any obstructions in the needed delivery path

D. The Installing Contractor shall be responsible to protect all site delivered equipment from exposure to dirt, dust, fumes, water, falling or wind driven rain or debris, moisture, corrosive substances, and physical damage.

E. The Installing Contractor shall be responsible to ensure that the generator equipment and generator system components and accessory equipment, including all generator transfer switch equipment shall be handled, protected, stored, and installed according to manufacturer's written instructions. Use factory-installed lifting provisions where provided.

F. Besides normal care considerations, the Installing Contractor shall be responsible to coordinate with the generator equipment supplier for the proper handling and safety of the generator system equipment. The Contractor shall obtain from the Generator Supplier prior to generator system equipment site delivery, adequate information and instructions for the Installing Contractor's use in ensuring that all of the delivered generator system equipment, including the generator enclosure and transfer switch equipment, will be correctly and properly offloaded, rigged, cared for, protected, stored, and installed by the Installing Contractor.

G. The Installing Contractor shall be responsible to confirm that all unsatisfactory site conditions are corrected prior to scheduling all generator system equipment deliveries and installations at the Project site.

3.05 SYSTEM START-UP AND TESTING

A. The Generator Supplier's manufacturer shall provide a trained field service technician who shall be responsible for performance of the field start-up and testing of the generator equipment. The Generator Supplier shall furnish the Engineer with written certification assuring that each item of equipment is complete, in good condition, free from damage and properly installed, connected, adjusted and operating properly.

B. The Installing Contractor shall provide the required assistance to the generator set manufacturer's field service technician during start-up and testing. This assistance shall be

generally limited to tasks directly associated with the installation of the generator system equipment, not with the internal components or inherent function of the generator set equipment.

C. The Installing Contractor shall be responsible to confirm the site provision of the necessary natural gas supply to the site installed natural gas fueled generator set engine as required for all onsite startup, testing and operational demonstrations of the generator set equipment. Installing Contractor shall confirm that adequate quantity, flow, pressure, and stability of industry pipeline dry natural gas is available at the site for continuous connected supply to the generator set natural gas supply system for operation of the generator set prior to Generator Supplier initiation of generator equipment startup and testing procedures.

D. The generator vendor shall provide and deliver to the site, temporary, dry type resistive load bank equipment and temporary power conductors as necessary for load bank testing of the generator set. The load bank capacity shall be sized and furnished so as to have a minimum usable load testing capability of 100% of the generator set's nameplated standby KW rating. Site building load shall not be used in conjunction with the generator system load bank testing. The Installing Contractor shall be responsible for the electrical connections and disconnections of the Generator Supplier furnished temporary use load bank equipment and power conductors / cables to all of the generator system equipment and the temporary load bank equipment as necessary to satisfactorily perform the required generator system load bank testing.

E. Generator set load test: Operating on natural gas supply, provide load testing for the site generator set as specified herein. For each addition and removal of test load on the generator set during the load bank testing, record the generator block loading and unloading transient high and low voltage and high and low frequency levels and actual recovery time for each transient load change in order to achieve generator set steady state operation with stabilized voltage and frequency levels.

F. Should the generator testing fail or indicate that any of the EG system equipment or it's operation and performance is not in compliance with the Specifications, the costs of all corrective measures shall be borne by the Installing Contractor. Once corrective measures are implemented, the operational testing requirements shall be repeated at the cost of the Installing Contractor. The Installing Contractor shall be additionally responsible for all fuel, material, labor, and delay costs associated with retesting procedures.

G. Generator supplier shall provide the necessary information to the Contractor for their use in furnishing AC power cable and wiring interface of the new generator equipment with the generator automatic transfer switch and for required Station annunciation / monitoring equipment so that automatic operation and annunciation of the complete emergency power system functions as described and as required by these Specifications.

H. System start-up and operational testing procedures shall not be limited to those specified herein. Others shall be performed as required to confirm and demonstrate that the furnished generator system functions as described and required by these Specifications.

I. Site testing of the generator set shall be in accordance with the testing guidelines of the Manufacturer and these Specifications. All testing shall be provided in accordance with the approval requirements of the Engineer.

J. The generator supplier shall provide and deliver to the site, temporary, dry type resistive load banks for load bank testing of the generator set. The load bank capacity shall be sized and furnished so as to have a minimum usable load testing capability of 100% of the generator set's nameplated standby rating. Station / building electrical load shall not be used in conjunction with the generator system load bank testing. The Installing Contractor shall be responsible for connection and disconnection of the generator supplier furnished temporary use load bank equipment cables to all of the generator set and the temporary load bank equipment as necessary to perform the generator equipment load bank testing.

K. Generator system operational and demonstration testing shall be performed by the Generator Supplier and the Installing Contractor as coordinated with, and in the presence of the Engineer and any required approval Authorities Having Jurisdiction.

3.06 PAINTING

A. The engine generator set and associated enclosure equipment shall be shop primed and finish coated in accordance with the Manufacturer's standard practice with heat resistant paint prior to shipment. The generator outdoor enclosure shall be white in color and the enclosure mounting frame base shall be black in color. All areas damaged during shipment or installation shall be touched up after installation. The generator system equipment shall be touched up painted as required prior to Owner acceptance. An adequate supply of Manufacturer's touch-up paint for the generator set, the generator enclosure, and the enclosure mounting base floor shall be supplied by the Generator Supplier to the Owner.

3.07 SYSTEM SERVICE CONTRACT

A. The Generator Supplier shall provide to the Owner a one (1) year service maintenance contract for the furnished generator set equipment, including annual standard engine oil change and disposal of removed oil for the new generator set in accordance with all Federal, State, and local codes and requirements. The generator supplier's service maintenance contract shall include four (4) routine scheduled maintenance service visits with a complete engine oil change on the fourth visit. The service maintenance contract shall commence on the date of substantial completion as approved by the Engineer. The Generator Supplier shall maintain 24 hour / 365 day emergency contact access to personnel of the Generator Supplier to expedite emergency repairs including parts replacements. The Generator Supplier must furnish this service maintenance contract and associated services directly, not through an alternate or sub contracted company or supplier, no exceptions. Complete details of the service contract shall be included in the Generator Supplier's furnished Shop Drawing Submittals and in the Generator Supplier's final parts, operation and maintenance manuals furnished to the Owner.

B The Generator Supplier's service maintenance agreement contract shall be optionally available for purchase extension by the Owner at the end of the specified one (1) year service maintenance agreement. The Generator Supplier shall maintain the following:

1. Local generator supplier employed trained and qualified mechanics, technicians, work vehicles, and service / repair equipment.
2. Factory trained service representatives and all tooling necessary to install, test, maintain, and repair or replace all provided equipment.
3. Specified Parts Availability must be maintained by the generator supplier for a minimum of ten (10) years from date of generator equipment startup.

4. Locally available at all times parts inventory stock of not less than 80% of all engine replacement parts and must maintain generator equipment service and parts availability on a 365 day / 24 hour basis. Proof and written certification of Generator Supplier compliance with these requirements shall be provided by the generator supplier and included in the furnished generator system Submittals and parts, operation and maintenance manuals. An inspection of the generator supplier's Station may be made by the Engineer of Record in order to substantiate this requirement. The Generator Supplier shall guarantee 100% parts availability within 72 hours from the time of any service repair request or when an order is entered with the generator supplier.

3.08 WARRANTY

A. The Generator Supplier shall be capable of, and solely responsible to maintain and provide factory trained and qualified service personnel and, the specified stock and availability of replacement or repair parts, technical assistance and support, and complete warranty service administration on direct behalf of the furnished generator equipment Manufacturer. Subcontracting or rerouting of these services by the generator system supplier is not acceptable. Generator Supplier written certification of compliance to these requirements must be included in the furnished generator system Submittals and in the generator equipment parts and operation manuals furnished to Engineer and the Owner.

B. All of the Generator Supplier furnished generator system equipment furnished under this Section shall be guaranteed against defects in material, parts, and workmanship by both the generator set Manufacturer and the generator Supplier. The generator system equipment warranty and associated coverage shall be for a period of five (5) years, (60 months). The warranty shall be comprehensive covering all Generator Supplier furnished generator system equipment, including the generator set and the, outdoor weather protective enclosure, and all accessory equipment for each. All generator system equipment, including, but not limited to, the furnished generator set, the generator set outdoor weather protective sound attenuated enclosure, automatic transfer switch equipment, remote annunicator panel, and all generator system accessory items furnished by the generator Supplier shall be covered by this comprehensive five (5) year warranty, no exceptions. There shall be no warranty related charge deductibles or associated service fees applicable to the Owner for justifiable Generator Supplier furnished warranty services for the entire duration of the specified warranty period. The generator equipment warranty coverage shall commence on the date of initial satisfactory start-up and load bank testing of the generator set, and shall include all Generator Supplier furnished labor, parts, travel time, expenses, and generator equipment expendable items (lubricating oil, coolant, filters, gaskets, and other serviceable items made unusable or required to be replaced by the warrantable defect) necessary for implementation and completion of all warrantable equipment repairs or corrective actions furnished by the Generator Supplier at the job site or elsewhere. Provided the generator system is operated properly within the application as specified herein, generator set running hours shall not be a limiting factor for the generator system equipment warranty provision, either by the Manufacturer or by the Generator Supplier.

C. The furnished generator set batteries are considered a consumable item and shall be warranted against defects in material and workmanship for a period of two (2) years from generator set startup, with no cost prorating. The Owner shall be responsible to maintain the generator equipment at all times in accordance with the generator equipment manufacturer's maintenance guidelines.

D. Manufacturer or Generator Supplier exceptions to these warranty requirements shall not be acceptable. Provision of the generator equipment for this project constitutes Generator Supplier acceptance pf these specified warranty requirements, regardless of any Manufacturer or Generator Supplier warranty coverage exceptions.

E. The generator system Shop Drawing Submittals and furnished generator system parts, operation and maintenance manuals must include written warranty provision information and supporting documentation clearly indicating and certifying complete compliance to the specified warranty requirements for all of the generator system equipment furnished by the generator Supplier, including the generator outdoor enclosure, no exceptions. Failure of the Generator Supplier to provide the Owner with the specified warranty provisions and associated warranty services shall be sufficient cause for rejection of the generator equipment.

F. The Generator Supplier must maintain and be able to provide locally available (within 100 miles of the project installation) Factory trained and qualified service personnel employed by the Generator Supplier, the specified local stock and availability of replacement or repair parts, technical support assistance, and complete warranty and service administration on direct authorized behalf of the furnished generator equipment Manufacturers. These warranty services shall be available to the Owner from the generator Supplier on a 365 day / 24 hour basis. Generator Supplier warranty services are to be provided during generator Supplier normal business service work week hours, however, overtime or premium time warranty services shall be available and furnished at all times by the generator Supplier if requested by the Owner, for which the Owner shall be responsible and obligated to compensate the Generator Supplier only for the after hours overtime or premium time labor and services differential charges. Subcontracting or rerouting of any of the warranty or repair related services by the Generator Supplier to other generator Dealers or distributors, repair, or service providers is not acceptable.

3.09 PARTS, OPERATION AND MAINTENANCE MANUALS

A. After completion of work, and satisfactory start-up and testing of the equipment at the project site, deliver to the Engineer, Three (3) copies of the generator equipment Parts, operation instructions, maintenance manuals and drawings presenting full details for care and maintenance of each item of equipment provided under this Contract. The manuals shall be furnished as detailed herein.

B. Each manual shall contain the operating and maintenance information and parts lists for all equipment provided under this Contract. When necessary, provide supplemental drawings to show system operation and servicing and maintenance points. For all electrical components, provide complete, as field installed and wired electrical wiring and interface diagrams. Manuals shall include instructions required to accomplish specified operation and functions. Data shall be neat, clean, legible copies.

1. In general the manual shall include, but not necessarily be limited to, the following:
   a. Operating Instructions - with description and illustration of the engine-generator set, engine and generator controls and any other controls and indicators.

b. Parts Books / information- that illustrate and list all equipment and assemblies, subassemblies and components, including gaskets, hoses and fastening hardware (nuts, bolts, washers, etc.).

c. Preventative Maintenance Instructions - on the complete system that cover daily, weekly, monthly, and annual maintenance requirements and schedules including a complete lubrication chart and information.

d. Troubleshooting Chart - covering the complete engine-generator set showing description of trouble, probable cause, and suggested remedy.

e. Recommended Spare Parts List - showing all consumables anticipated to be required during normal operation, routine maintenance and testing, including current pricing and quantities recommended to be maintained on hand at the Owner's Station.

f. Project specific as field installed and generator system as-built and field tested electrical schematics including Wiring Diagrams with point to point interconnection diagrams for all wiring interfaces - showing function and operational sequences of all electrical components and electrical systems.

C. Manuals shall be in the form of three-ring binders adequately labeled with the project name, location, shall include Generator Supplier normal and emergency contact information, and the contents clearly indexed.

3.10 ORIENTATION / TRAINING

A. The Generator Supplier shall provide a complete and detailed orientation for the Owner's operation and maintenance personnel as coordinated with the Engineer and the Owner through the Installing Contractor. The generator system parts, operation and maintenance manuals are to be furnished and approved by the Engineer prior to Owner training. The orientation shall include hands-on instructions and demonstrations. Topics covered during the training shall include complete generator system operation, control and transfer operations, schematics, wiring diagrams, metering operations, indicators, warning lights, shutdown system, routine maintenance, remedial trouble shooting procedures, service maintenance contract, and warranty provisions. Allow one (1) separate day for scheduled provision of Owner training.

END OF SECTION

DRAWING INDEX

--	COVER SHEET
C-01	SITE PLAN
C-02	DETAILS

CITY OF FORT LAUDERDALE

PROJECT # P12479
STORMSTATION 2
FIXED EMERGENCY GENERATORS

399 S.E. 1ST AVENUE

FORT LAUDERDALE, FLORIDA

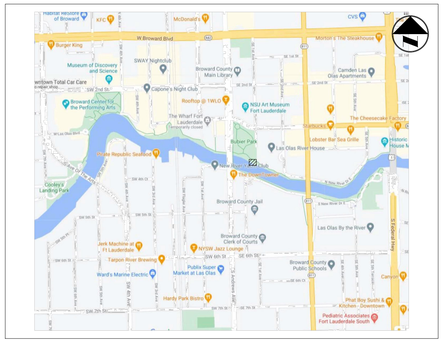

NORTH

LOCATION SKETCH

PROJECT #P12479
STORMSTATION 2
FIXED EMERGENCY GENERATORS
399 S.E. 1ST AVENUE, FORT LAUDERDALE, FLORIDA 33301

CITY OF FORT LAUDERDALE
PUBLIC WORKS DEPARTMENT
ENGINEERING & ARCHITECTURE
100 North Andrews Avenue, Fort Lauderdale, Florida 33301

FORT LAUDERDALE CITY COMMISSION

DEAN J. TRANTALIS	MAYOR
JOHN C. HERBST	COMMISSIONER - DISTRICT I
STEVEN GLASSMAN	COMMISSIONER - DISTRICT II
PAMELA BEASLEY-PITTMAN	COMMISSIONER - DISTRICT III
WARREN STURMAN	COMMISSIONER - DISTRICT IV

PROJECT MANAGER	JOB TITLE	PHONE NO.
GARY TENN	SENIOR SUPERVISING ENGINEER	(954) 739-6400

DATE: 02/02/24

CAD FILE: 20-0076-001-01-COV FTL

DRAWING FILE No.: 4-144-22

PERMIT

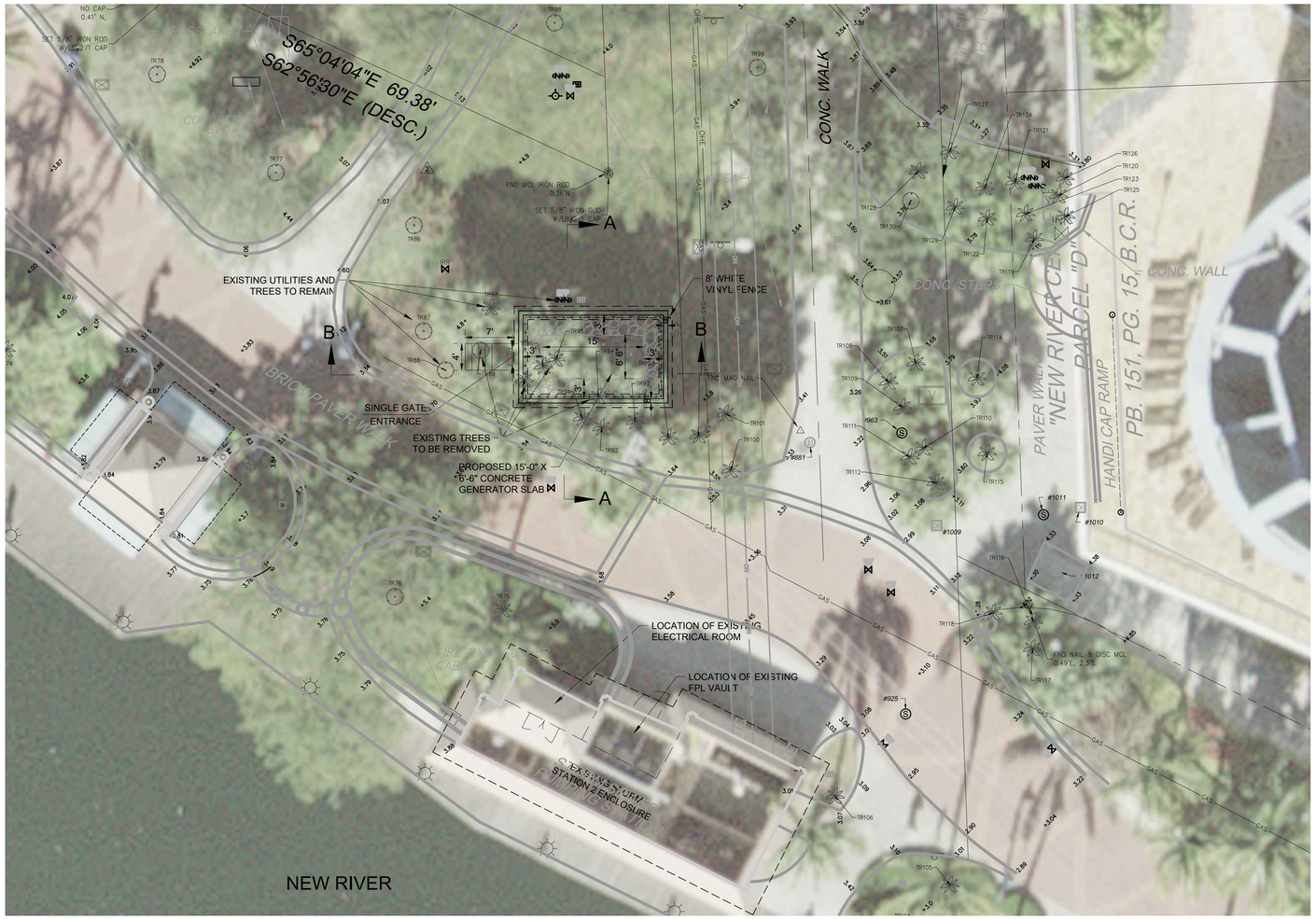

PROJECT SITE

SITE ADDRESS:
399 S.E. 1ST AVENUE
FORT LAUDERDALE, FLORIDA 33301

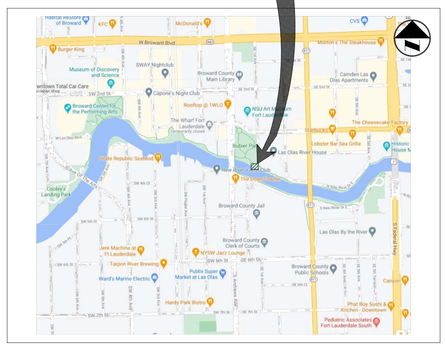

LOCATION MAP

N.T.S.
SECTION 10, TOWNSHIP 50 SOUTH, RANGE 42 EAST

0 10' 20'
SCALE: 1" = 10'

EXISTING LEGEND:

- ANCHOR
- BLOW-OFF VALVE
- CATCH BASIN
- CONCRETE LIGHT POLE
- CONCRETE POST
- CONCRETE POWER POLE
- CURB INLET
- ELECTRICAL OUTLET
- ELECTRICAL PANEL
- ELECTRICAL PULL BOX
- ELECTRICAL MANHOLE
- GAS MARKER
- HEADWALL
- METAL LIGHT POLE
- MONITORING WELL
- PIPE
- PARKING LIGHT 2 SQUARE
- SANITARY MANHOLE
- SIGN
- SPOT-FLOOD LIGHT
- SANITARY SEWER CLEAN OUT
- STORM MANHOLE
- TELEPHONE MANHOLE
- TELEPHONE PEDESTAL
- TELEPHONE PULL BOX
- TRAFFIC POLE
- TRAFFIC PULL BOX
- TRANSFORMER PAD
- TRANS — WATER BLOW-OFF
- WATER VALVE
- WOOD POWER POLE
- OHW — OVER HEAD WIRES
- TOB — TOP OF BANK
- TOE — TOE OF SLOPE
- WM — WATER MAIN
- GUARDRAIL
- NON-VEHICULAR ACCESS LINE

PROPOSED LEGEND:

- 0.00 — PROPOSED PAVEMENT ELEVATION
- 0.00 — PROPOSED CONCRETE ELEVATION
- 0.0 — PROPOSED SOD ELEVATION
- GRAVEL (EXISTING SHRUBBERY TO BE REMOVED)
- CONCRETE GENERATOR PAD
- DRAINAGE FLOW DIRECTION

Always call 811 two full business days before you dig to have underground utilities located and marked.

Sunshine811.com

ALL EXISTING AND PROPOSED ELEVATIONS SHOWN HEREON ARE BASED ON NAVD 1988

PROPOSED SITE PLAN

PROJECT # P12479
STORMSTATION 2 FIXED EMERGENCY GEN.
EMERGENCY GENERATOR
1 OF 2
FORT LAUDERDALE

ENGINEER:
GARY TENN
REG. No: 42099
DATE: 02/02/24
TEL: (954) 739-6400
FAX: N/A

DRAWN BY:	DATE: 02/02/24
DESIGNED BY:	SCALE: 1" = 10'
CHECKED BY:	
FIELD BOOK:	

CITY OF FORT LAUDERDALE
PUBLIC WORKS DEPARTMENT
ENGINEERING
100 North Andrews Avenue, Fort Lauderdale, Florida 33301

REVISIONS

NO.	DATE	BY	CHK'D	DESCRIPTION
1	8/26/21	FA		FTL BLDG DEPT COMMENTS
2	12/10/21	FA		FTL BLDG DEPT COMMENTS

SHEET NO.
C-01
TOTAL: 0
CAD FILE: 20-0076-001-01-SITE V4 FTL
DRAWING FILE NO. 4-144-23

\\CTAFILE02\ENG\PROJECTS\2020\20-0076-001-01 FT LAUD STORMSTATION 2 EMERGENCY GENERATOR\DRAWINGS\20-0076-001-01-SITE V4 FTL.DWG

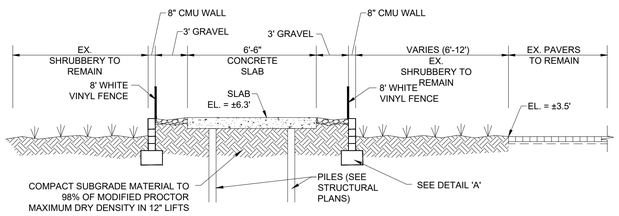

SECTION A-A

SCALE: N.T.S.

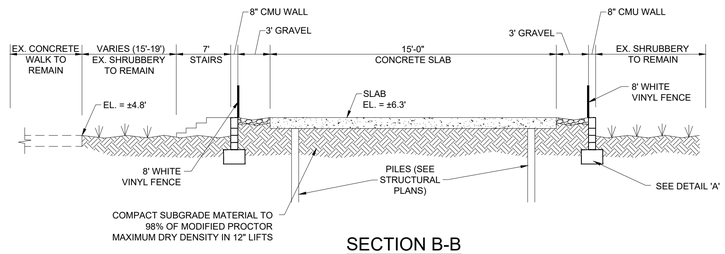

SECTION B-B

SCALE: N.T.S.

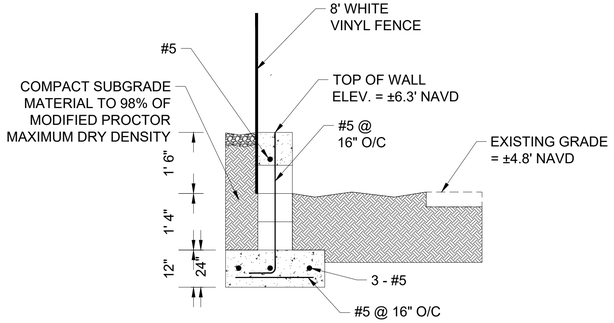

DETAIL 'A'

SCALE: N.T.S.

VINYL FENCE

SCALE: N.T.S.

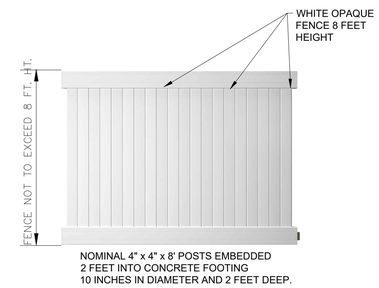

OPAQUE 8-FT FENCE AND GATE DETAIL

ENGINEER: GARY TENN
REG. No: 42099
DATE: 02/02/24
TEL: (954) 739-6400
FAX: N/A

DRAWN BY: | DATE: 02/02/24
DESIGNED BY: | SCALE:
CHECKED BY:
FIELD BOOK:

CITY OF FORT LAUDERDALE
PUBLIC WORKS DEPARTMENT
ENGINEERING
100 North Andrews Avenue, Fort Lauderdale, Florida 33301

REVISIONS

NO.	DATE	BY	CHK'D	DESCRIPTION
1	8/26/21	FA		FTL BLDG DEPT COMMENTS
2	12/10/21	FA		FTL BLDG DEPT COMMENTS

PROJECT # P12479
STORMSTATION 2 FIXED EMERGENCY GEN.
EMERGENCY GENERATOR
2 OF 2
FORT LAUDERDALE

SHEET NO.
C-02
TOTAL: 0
CAD FILE: 20-0076-001-01-DET FTL
DRAWING FILE NO. 4-144-23

\\CTAFILE02\ENG\PROJECTS\2020\20-0076-001-01 FT LAUD STORMSTATION 2 EMERGENCY GENERATOR\DRAWINGS\20-0076-001-01-DET FTL.DWG

00STRUCTURAL NOTES

- ELECTRONIC VERSIONS OF STRUCTURAL DRAWINGS ARE THE SOLE, COPYRIGHTED PROPERTY OF MUENGINEERS, INC.
- ELECTRONIC VERSIONS OF DRAWINGS ARE NOT TO BE USED OR TRANSFERRED WITHOUT THE EXPRESS, WRITTEN PERMISSION OF MUENGINEERS, INC.

010000-GENERAL:

1. STRUCTURAL DRAWINGS SHALL BE USED IN CONJUNCTION WITH JOB SPECIFICATIONS AND ARCHITECTURAL, MECHANICAL, ELECTRICAL, PLUMBING, AND SITE DRAWINGS.
2. CONSULT THESE DRAWINGS FOR DEPRESSIONS, AND OTHER DETAILS NOT SHOWN ON STRUCTURAL DRAWINGS.
3. DIMENSIONS AND CONDITIONS MUST BE VERIFIED IN THE FIELD. ANY DISCREPANCIES SHALL BE BROUGHT TO THE ATTENTION OF THE ENGINEER BEFORE PROCEEDING WITH THE AFFECTED PART OF THE WORK.
4. DO NOT SCALE DRAWINGS TO OBTAIN DIMENSIONAL INFORMATION.
5. NOTES, TYPICAL DETAILS AND SCHEDULES APPLY TO ALL STRUCTURAL WORK UNLESS OTHERWISE NOTED. FOR CONDITIONS NOT SPECIFICALLY SHOWN, PROVIDE DETAILS OF A SIMILAR NATURE. VERIFY APPLICABILITY BY SUBMITTING SHOP DRAWINGS FOR REVIEW.
6. AT ALL TIMES THE CONTRACTOR SHALL BE SOLELY RESPONSIBLE FOR THE CONDITIONS OF THE JOBSITE INCLUDING SAFETY OF PERSONS AND PROPERTY. MUENGINEERS' PRESENCE OR REVIEW OF WORK DOES NOT INCLUDE THE ADEQUACY OF THE CONTRACTORS' MEANS OR METHODS OF CONSTRUCTION.
7. SHORING, BRACING AND PROTECTION OF EXISTING AND ADJACENT STRUCTURES DURING CONSTRUCTION IS THE SOLE RESPONSIBILITY OF THE CONTRACTOR. PROTECT AND MAINTAIN THE INTEGRITY OF ADJACENT STREETS, BUILDINGS AND ALL OTHER STRUCTURES.
8. THE STRUCTURE IS DESIGNED TO BE SELF-SUPPORTING AND STABLE AFTER THE STRUCTURE IS COMPLETE.
9. IT IS THE CONTRACTOR'S RESPONSIBILITY TO DETERMINE ERECTION PROCEDURES AND SEQUENCE TO ENSURE SAFETY OF THE BUILDING AND ITS COMPONENTS DURING ERECTION. THIS INCLUDES THE ADDITION OF NECESSARY SHORING, SHEETING, TEMPORARY BRACING, GUYS OR TIEDOWNS.
10. THE CONTRACTOR IS SOLELY RESPONSIBLE FOR INITIATING, MAINTAINING AND SUPERVISING ALL SAFETY PRECAUTIONS AND PROGRAMS IN CONNECTION WITH THE WORK. THE ENGINEER OF RECORD IS NOT RESPONSIBLE FOR ANY MEANS AND METHODS OF CONSTRUCTION OR FOR ANY RELATED SAFETY PRECAUTIONS OR PROGRAMS.

010001-DESIGN LOADS:

1. THE STRUCTURE HAS BEEN DESIGNED IN ACCORDANCE WITH THE **2023** FLORIDA BUILDING CODE, AND APPLICABLE REFERENCE STANDARDS SUCH AS BUT NOT LIMITED TO **ASCE 7-22**
2. THE FOLLOWING SUPERIMPOSED LOADINGS HAVE BEEN UTILIZED:
3. **DG175 GC GENERATOR: 154.45"LX53.96"WX93.40"H**
   - DEAD LOAD 7236 LBS
4. **WIND:**
   - ASCE 7-16
   - **ENCLOSED** BUILDING
   - DIRECTIONALITY FACTOR Kd=**0.85**
   - BROWARD COUNTY: RISK CATEGORY **III**
   - ULTIMATE DESIGN WIND SPEED Vult=**180 MPH** (3-SECOND GUST)
   - NOMINAL DESIGN WIND SPEED Vasd=**140 MPH** (3-SECOND GUST)
   - EXPOSURE **C**

010002-SPECIAL INSPECTIONS:

1. SPECIAL INSPECTION OF THE CONSTRUCTION IS REQUIRED BY THE STATE OF FLORIDA IN ACCORDANCE WITH CHAPTER 553 OF THE FLORIDA STATUTES.
2. CONSTRUCTION SHALL BE INSPECTED IN ACCORDANCE WITH THE SPECIAL INSPECTION PLAN.

010003-REPORTS OF TESTING AND INSPECTION:

1. TESTING REPORTS FOR STRUCTURAL ITEMS AS REQUIRED WITHIN THESE DOCUMENTS AND/OR WITHIN THE SPECIFICATIONS SHALL BE SUBMITTED TO THE ENGINEER OF RECORD IN A TIMELY MANNER IN ELECTRONIC FORMAT.
2. REPORTS OF INSPECTION SHALL BE SUBMITTED TO ENGINEER OF RECORD ON A WEEKLY BASIS AND REPORTS CONTAINING INFORMATION ON NONCONFORMING INSTALLATIONS SHALL BE COPIED TO THE ENGINEER OF RECORD IMMEDIATELY.

010004-SHOP DRAWING REVIEW:

1. SHOP DRAWINGS SHALL BE SUBMITTED IN ELECTRONIC PDF FORMAT ONLY.
2. SHOP DRAWINGS SHALL BE SUBMITTED VIA E-MAIL TO HYPERLINK "mailto:ADMIN@MUENGINEERS.COM" ADMIN@MUENGINEERS.COM.
3. PRINTED PAPER COPIES WILL NOT BE REVIEWED AND RETURNED WITHOUT MUENGINEERS' REVIEW.
4. SHOP DRAWING SUBMITTALS ARE REQUIRED FOR ALL FRAMING SHOWN ON THESE DRAWINGS INCLUDING, BUT NOT LIMITED TO: CONCRETE MIXES, CONCRETE AND REINFORCING.
5. ELECTRONIC VERSIONS OF STRUCTURAL DRAWINGS ARE THE SOLE, COPYRIGHTED PROPERTY OF MUENGINEERS, INC. ELECTRONIC VERSIONS OF DRAWINGS ARE NOT TO BE USED OR TRANSFERRED WITHOUT THE EXPRESS, WRITTEN PERMISSION OF MUENGINEERS, INC. USERS WILL SIGN A RELEASE.
6. SHOP DRAWINGS WILL BE REVIEWED FOR GENERAL COMPLIANCE WITH THE DESIGN INTENT OF THE CONTRACT DOCUMENTS ONLY.
7. IT SHALL BE THE RESPONSIBILITY OF THE CONTRACTOR TO VERIFY COMPLIANCE WITH THE CONTRACT DOCUMENTS AS TO QUANTITY, LENGTH, ELEVATIONS, DIMENSIONS, CONSTRUCTION METHODS, DIMENSIONING, OTHER TRADE REQUIREMENTS ETC. PRIOR TO SUBMITTAL TO THE ARCHITECT/ENGINEER.
8. DRAWINGS WITHOUT CONTRACTOR'S APPROVAL STAMP AND WHICH HAVE NOT BEEN REVIEWED BY THE CONTRACTOR WILL BE RETURNED WITHOUT MUENGINEERS' REVIEW.
9. MUENGINEERS RESERVES A TWO-WEEK SHOP DRAWING REVIEW TIME (FROM THE DATE OF RECEIPT).
10. IN CASES OF A CONFLICT, INFORMATION PRESENTED ON STRUCTURAL DRAWINGS SHALL TAKE PRECEDENCE OVER THAT WITHIN SHOP DRAWINGS, UNLESS SPECIFICALLY NOTED BY MUENGINEERS IN WRITING.
11. THROUGH THE PROCESS OF A CURSORY REVIEW, MUENGINEERS ASSUMES NO RESPONSIBILITY FOR DIMENSIONS, QUANTITIES, ERRORS OR OMISSIONS. ANY ERRORS OR OMISSIONS IRRESPECTIVE OF MUENGINEERS' COMMENTS OR DURATION OF THE REVIEW SHALL BE THE RESPONSIBILITY OF AND MUST BE CORRECTED BY THE CONTRACTOR AT NO ADDITIONAL SERVICE CHARGE EVEN IF SUCH WORK WAS DONE IN ACCORDANCE WITH THE SHOP DRAWINGS
12. CHANGES AND ADDITIONS MADE ON RE-SUBMITTALS SHALL BE CLEARLY FLAGGED AND NOTED. THE PURPOSE OF THE RE-SUBMITTALS SHALL BE CLEARLY NOTED ON THE LETTER OF TRANSMITTAL. REVIEW WILL BE LIMITED TO THE FLAGGED AND NOTED ITEMS CAUSING THE RE-SUBMITTAL.

012300-CONTRACTOR PROPOSED CHANGES AND SUBSTITUTIONS:

1. PROPOSED CHANGES OR SUBSTITUTIONS TO STRUCTURAL DETAILS OR PLANS SHALL BE SUBMITTED TO MUENGINEERS FOR REVIEW AND APPROVAL.
2. SUBMITTALS SHALL CONTAIN FULL DOCUMENTATION OF CHANGES OR SUBSTITUTIONS WITH SUPPORTING, SEALED CALCULATIONS (WHERE APPLICABLE).
3. THE REVIEW OF CHANGES AND SUBSTITUTIONS, RE-ANALYSIS AND/OR RE-DRAFTING TO INCORPORATE CHANGES OR SUBSTITUTIONS INTO CONTRACT DOCUMENTS ARE ADDITIONAL SERVICES FOR THE EOR.

CONSTRUCTION COST REVISIONS ARE BETWEEN THE CONTRACTOR AND OWNER AND ARE NOT REVIEWED BY MUENGINEERS

310000-FOUNDATIONS:

1. FOUNDATIONS HAVE BEEN DESIGNED IN ACCORDANCE WITH THE RECOMMENDATIONS OF THE FOLLOWING GEOTECHNICAL REPORT.
   - REPORT NO.: **20-0076-001-01**
   - PREPARED BY: **CRAVEN THOMPSON & ASSOCIATES**
   - TITLED: **FORT LAUDERDALE STORM-STATION 2 FIXED EMERGENCY GENERATOR PAD**
   - DATED: **JANUARY 18, 2021**
   - THIS REPORT SHALL BE CONSIDERED PART OF THE CONTRACT DOCUMENTS
   - SEE THIS REPORT FOR COMPLETE GEOTECHNICAL RECOMMENDATIONS AND INSTALLATION PROCEDURES.
   - ALL SITE PREPARATION, EXCAVATION WORK AND BACK FILL WORK IS TO BE PERFORMED IN STRICT ACCORDANCE WITH THE RECOMMENDATIONS OF THE GEOTECHNICAL REPORT AND THE SUBSURFACE INVESTIGATION.
2. SOILS SUPPORTING FOUNDATIONS SHALL BE INSPECTED AND APPROVED BY A LICENSED GEOTECHNICAL ENGINEER PRIOR TO FOUNDATION REBAR INSTALLATION AND PLACING OF CONCRETE.
3. ALL SOIL BEARING SURFACES SHALL BE INSPECTED AND APPROVED BY A GEOTECHNICAL ENGINEER IMMEDIATELY PRIOR TO THE PLACEMENT OF CONCRETE.
4. THE GEOTECHNICAL ENGINEER SHALL ISSUE AN APPROVAL IN WRITING INDICATING THAT THE SOIL HAS BEEN PREPARED AND THAT THE HELICAL PILES HAVE BEEN INSTALLED IN ACCORDANCE WITH THE GEOTECHNICAL REPORT
5. DEWATERING OF THE SITE DURING CONSTRUCTION IS THE SOLE RESPONSIBILITY OF THE CONTRACTOR. PRECAUTIONS SHALL BE TAKEN BY THE CONTRACTOR NOT TO UNDERMINE EXISTING FOUNDATIONS. METHOD OF DEWATERING AND CALCULATIONS FOR THE APPROPRIATE SYSTEM ARE THE SOLE RESPONSIBILITY OF THE CONTRACTOR.

316200-HELICAL PILES:

1. HELICAL PILES SHALL BE DESIGNED BY A REGISTERED FLORIDA GEOTECHNICAL ENGINEER AND SIGNED AND SEALED SUBMITTALS INCLUDING DESIGN CALCULATION, SECTIONS AND DETAILS SHALL BE PROVIDED TO MUENGINEERS FOR REVIEW AND APPROVAL PRIOR TO FABRICATION AND INSTALLATION
2. SHALL BE INSTALLED IN ACCORDANCE WITH THE GEOTECHNICAL RECOMMENDATIONS AND INSTALLATION PROCEDURES CONTAINED IN THE GEOTECHNICAL REPORT AND BY THE SPECIALTY ENGINEER RECOMMENDATIONS.
3. HELICAL PILE INSTALLATION MUST BE MONITORED, DOCUMENTED, INSPECTED AND APPROVED BY THE PROJECT'S GEOTECHNICAL ENGINEER OF RECORD PRIOR TO COMMENCING WITH PILE CAP CONSTRUCTION.
4. THE PROJECT GEOTECHNICAL ENGINEER OF RECORD SHALL ISSUE AN APPROVAL IN WRITING INDICATING THAT THE HELICAL PILES HAVE BEEN INSTALLED IN ACCORDANCE WITH THE GEOTECHNICAL REPORT AND ARE ADEQUATE TO SAFELY SUPPORT THE DESIGN LOADS INDICATED IN THE PROJECTS GEOTECHNICAL REPORT.
5. PILING
6. THE HELICAL PIER SHALL PENETRATE INTO THE LIMESTONE FORMATION
7. PIERS SHOULD ACHIEVE THE REQUIRED CAPACITY AT TOTAL BELOW GROUND (EXISTING) DEPTHS OF MINIMUM **22** TO **30** FEET.
8. THE LEAD SECTION SHOULD CONSIST OF A **3** INCH CIRCULAR STEEL SHAFT TO WHICH ARE AFFIXED MINIMUM THREE HELIX PLATES WITH DIAMETERS OF 8,10 AND 12 INCHES.
9. CUTTING TEETH SHOULD BE MOUNTED AS NEEDED ON THE PLATES TO FACILITATE ADVANCEMENT OF THE LEAD SECTION INTO THE CARBONATE ROCK FORMATION.
6. PILE CAPACITY:
   - THE DESIGN IS BASED ON A MAXIMUM WORKING CAPACITY OF **20** KIPS PER PILE IN COMPRESSION AND **10** KIPS PER PILE IN TENSION.
7. LOCATION OF PILES:
   - WHEN IN CLUSTERS OF TWO OR MORE, INDIVIDUAL PILES SHALL BE INSTALLED WITHIN 3 INCHES OF DESIGN LOCATION.
   - THE PIERS SHOULD BE INSTALLED AT CENTER TO CENTER SPACINGS OF NOT LESS THAN THREE FEET.
   - THE CUMULATIVE LOCATION OF PILE GROUP CENTER OF GRAVITY SHALL NOT EXCEED 1-1/2".
   - SINGLE PILES SHALL BE INSTALLED WITHIN 1-1/2 INCHES OF DESIGN LOCATION.
   - VARIATION FROM PLUMB SHALL NOT EXCEED 1/2 INCH IN TWO FEET.
   - AN AS-BUILT SURVEY OF PILE LOCATIONS SHALL BE PERFORMED BY A FLORIDA REGISTERED LAND SURVEYOR.
   - PILES SHALL BE LOCATED ON THE AS-BUILT DRAWINGS HORIZONTALLY AND VERTICALLY FROM THE DESIGN LOCATION.
   - SUBMIT THE AS-BUILT DRAWINGS TO THE STRUCTURAL ENGINEER FOR APPROVAL.
   - CONTRACTOR IS RESPONSIBLE FOR ENGINEERING COSTS ASSOCIATED WITH RE-ANALYSIS AND REDESIGNS CAUSED BY PILES IMPROPERLY INSTALLED.

030001-CONCRETE

1. CONCRETE
   - SHALL BE PER AN APPROVED MIX DESIGN PROPORTIONED TO ACHIEVE A STRENGTH AT 28 DAYS AS LISTED BELOW WITH A PLASTIC AND WORKABLE MIX:
     - 3000 psi FOR RC SLAB.
   - WATER/CEMENT RATIO FOR CONCRETE OF RC SLAB SHALL NOT EXCEED 0.40 BY WEIGHT.
   - CONCRETE MIXES FOR ALL EXPOSED CONCRETE RC SLAB SHALL HAVE BARRIER ONE POROSITY INHIBITING ADMIXTURE OR A BY THE ENGINEER OF RECORD APPROVED ALTERNATE ADMIXTURE INCLUDED IN THE MIX DESIGN.
   - THE GC SHALL PROVIDE A SHOP DRAWINGS SUBMITTAL AND FOLLOW ALL BARRIER ONE'S REQUIREMENTS FOR INSTALLATION AND TESTING. INCLUDING COORDINATING THE REQUIRED TEST CYLINDERS.
   - CONCRETE SHALL BE PLACED AND CURED ACCORDING TO ACI STANDARDS AND SPECIFICATIONS.
   - SUBMIT PROPOSED MIX DESIGN WITH RECENT FIELD CYLINDER OR LAB TESTS FOR REVIEW PRIOR TO USE.
   - MIX SHALL BE UNIQUELY IDENTIFIED BY MIX NUMBER OR OTHER POSITIVE IDENTIFICATION.
   - MIX SHALL MEET THE REQUIREMENTS OF ASTM C33 FOR COARSE AGGREGATE.
   - CONCRETE SHALL COMPLY WITH THE REQUIREMENTS OF ASTM STANDARD C94 FOR MEASURING, MIXING, TRANSPORTING, ETC.
   - MIX DESIGN SUBMITTALS FOR EXPOSED CONCRETE RC SLAB MUST HIGHLIGHT THE INCLUSION OF BARRIER ONE ADMIXTURE.
   - THE GC SHALL MUST FOLLOW ALL ADMIXTURE MANUFACTURE REQUIREMENTS FOR MIXING, INSTALLATION AND TESTING. INCLUDING COORDINATING THE REQUIRED TEST CYLINDERS.
   - CONCRETE TICKETS SHALL BE TIME STAMPED WHEN CONCRETE IS BATCHED.
   - THE MAXIMUM TIME ALLOWED FROM THE TIME THE MIXING WATER IS ADDED UNTIL IT IS DEPOSITED IN ITS FINAL POSITION SHALL NOT EXCEED ONE AND ONE HALF (1-1/2) HOURS.
   - IF FOR ANY REASON THERE IS A LONGER DELAY THAN THAT STATED ABOVE, THE CONCRETE SHALL BE DISCARDED.
   - IT SHALL BE THE RESPONSIBILITY OF THE TESTING LAB TO NOTIFY THE OWNER'S REPRESENTATIVE AND THE CONTRACTOR OF ANY NONCOMPLIANCE WITH THE ABOVE.

030001-CONCRETE CON'T

- SLABS SHALL BE CURED USING A DISSIPATING CURING COMPOUND MEETING ASTM STANDARD C309 TYPE 1-D AND SHALL HAVE A FUGITIVE DYE. THE COMPOUND SHALL BE PLACED AS SOON AS THE FINISHING IS COMPLETED OR AS SOON AS THE WATER HAS LEFT THE UNFINISHED CONCRETE. SCUFFED OR BROKEN AREAS IN THE CURING MEMBRANE SHALL BE RECOATED DAILY. CALCIUM CHLORIDES SHALL NOT BE UTILIZED; OTHER ADMIXTURES MAY BE USED ONLY WITH THE APPROVAL OF THE ENGINEER.
- CONCRETE MIX DESIGNS SHALL INCLUDE A WRITTEN DESCRIPTION INDICATING WHERE EACH PARTICULAR MIX IS TO BE PLACED WITHIN THE STRUCTURE.
- CONCRETE DESIGN MIX SUBMITTALS SHALL INCLUDE TESTED, STATISTICAL BACK-UP DATA AS PER CHAPTER 5 OF ACI 318.

2. CONCRETE TESTING:
   - AN INDEPENDENT TESTING LABORATORY SHALL PERFORM THE FOLLOWING TESTS ON CAST IN PLACE CONCRETE:
   - ASTM C143: "STANDARD TEST METHOD FOR SLUMP OF PORTLAND CEMENT CONCRETE." MAXIMUM SLUMP SHALL BE **5** INCHES.
   - ASTM C39: "STANDARD TEST METHOD FOR COMPRESSIVE STRENGTH OF CYLINDRICAL CONCRETE SPECIMENS." A SEPARATE TEST SHALL BE CONDUCTED FOR EACH CLASS, FOR EVERY 50 CUBIC YARDS (OR FRACTION THEREOF), PLACED PER DAY. REQUIRED CYLINDER(S) QUANTITIES AND TEST AGE AS FOLLOWS:
     - 1 AT 3 DAYS
     - 1 AT 7 DAYS
     - 2 AT 28 DAYS
   - ONE ADDITIONAL RESERVE CYLINDER TO BE TESTED UNDER THE DIRECTION OF THE ENGINEER, IF REQUIRED. IF 28 DAY STRENGTH IS ACHIEVED, THE ADDITIONAL CYLINDER(S) MAY BE DISCARDED.
3. REINFORCING STEEL:
   - SHALL BE ASTM A615 GRADE 60 DEFORMED BARS, FREE FROM OIL, SCALE AND RUST AND PLACED IN ACCORDANCE WITH THE TYPICAL BENDING DIAGRAM AND PLACING DETAILS OF ACI STANDARDS AND SPECIFICATIONS.
   - SECURE APPROVAL OF SHOP DRAWINGS PRIOR TO COMMENCING FABRICATION.
4. CORROSION RESISTANT REINFORCING STEEL:
   - TOP BARS AT EXPOSED AREAS AS SHOWN ON STRUCTURAL PLANS SHALL BE HOT DIPPED GALVANIZED.
5. CHEMICAL (ADHESIVE) ANCHORS:
   - SHALL BE AN EQUAL TWO-PART EPOXY POLYMER INJECTION SYSTEM, SUCH AS RAMSET "EPCON", POWERS RAWL "POWER-FAST" CARTRIDGE SYSTEM, DUR-O-WAL "DUR-O-PAIR" EPOXY ANCHOR, OR HILTI HSE2411 EPOXY DOWELING SYSTEM, OR ENGINEER APPROVED SUBSTITUTION, INSTALLED IN ACCORDANCE WITH MANUFACTURERS INSTRUCTIONS.
   - INSTALLERS SHALL BE TRAINED BY THE MANUFACTURER'S REPRESENTATIVE.
6. POST-INSTALLED ANCHORS:
   - POST-INSTALLED ANCHORS SHALL ONLY BE USED WHERE SPECIFIED ON THE DRAWINGS.
   - CONTRACTOR SHALL OBTAIN APPROVAL FROM ENGINEER OF RECORD PRIOR TO USING POST-INSTALLED ANCHORS FOR MISSING OR MISPLACED CAST-IN-PLACE ANCHORS.
   - UNLESS SPECIFIED OTHERWISE, ANCHORS SHALL BE EMBEDDED IN THE APPROPRIATE SUBSTRATE WITH A MINIMUM EMBEDMENT OF 8 TIMES THE NOMINAL ANCHOR DIAMETER OR THE EMBEDMENT REQUIRED TO SUPPORT THE INTENDED LOAD.
   - ANCHORS SHALL BE INSTALLED PER THE MANUFACTURER'S INSTALLATION INSTRUCTIONS AT NOT LESS THAN MINIMUM EDGE DISTANCE AND/OR SPACINGS INDICATED IN THE MANUFACTURER'S LITERATURE.
   - SUBSTITUTION REQUESTS, FOR PRODUCTS OTHER THAN THOSE LISTED BELOW, SHALL BE SUBMITTED TO THE ENGINEER WITH CALCULATIONS THAT ARE PREPARED & SEALED BY A REGISTERED PROFESSIONAL ENGINEER SHOWING THAT THE SUBSTITUTED PRODUCT WILL ACHIEVE AN EQUIVALENT CAPACITY USING THE APPROPRIATE DESIGN PROCEDURE REQUIRED BY THE BUILDING CODE.
   - ACCEPTABLE PRODUCTS ARE:
     - EXPANSION ANCHORS FOR NON-CRACKED CONCRETE ONLY:
       - WEDGE-ALL (WA), BY SIMPSON STRONG-TIE
       - KWIK BOLT 3, BY HILTI
     - CRACKED CONCRETE MECHANICAL ANCHORS:
       - STRONG-BOLT (STB), BY SIMPSON STRONG-TIE
       - KWIK BOLT (TZ), BY HILTI
     - SCREW ANCHORS:
       - TITEN HD (THD), BY SIMPSON STRONG-TIE
       - HUS-H, BY HILTI
     - ADHESIVE ANCHORS FOR ANCHORING INTO SOLID BASE MATERIAL
       - ACRYLIC-TIE (AT)
       - SET EPOXY-TIE (SET) WITH RETROFIT BOLTS (RFB), BY SIMPSON STRONG-TIE
       - HIT RE 500, BY HILTI
     - ADHESIVE ANCHORS FOR ANCHORING INTO HOLLOW BASE MATERIAL
       - CONTACT ENGINEER OF RECORD
7. CONCRETE FORMWORK AND SHORING INCLUDING BUT NOT LIMITED TO CONCRETE SLABS:
   - DESIGN, ERECTION AND REMOVAL OF ALL FORMWORK, SHORES AND RESHORES SHALL MEET REQUIREMENTS SET FORTH IN ACI STANDARDS 347 AND 301.
   - UNLESS NOTED OTHERWISE ON THE STRUCTURAL DRAWINGS, FORMS SHALL NOT BE REMOVED PRIOR TO STRUCTURAL CONCRETE REACHING A MINIMUM OF THREE-QUARTERS (SLABS) OF ITS SPECIFIED 28-DAY COMPRESSIVE STRENGTH.
8. PENETRATIONS:
   - THE CONTRACTOR SHALL VERIFY THE DIMENSIONS AND LOCATIONS OF ALL OPENINGS, PIPE SLEEVES, ETC. AS REQUIRED BY ALL TRADES, BEFORE THE CONCRETE IS POURED. THE CONTRACTOR SHALL CONSULT THE CIVIL, MECHANICAL, AND ELECTRICAL DRAWINGS, AS WELL AS THE STRUCTURAL DRAWINGS FOR THE LOCATION, NUMBER, AND SIZE OF ALL OPENINGS, SLEEVES, ETC. HOWEVER, OPENINGS NOT SHOWN ON THE STRUCTURAL DRAWINGS SHALL BE INSTALLED ONLY AFTER APPROVAL BY MUENGINEERS, INC.
   - NO PENETRATIONS SHALL BE MADE IN ANY STRUCTURAL MEMBERS OTHER THAN THOSE LOCATED ON THE STRUCTURAL DRAWINGS WITHOUT PREVIOUS APPROVAL OF THE ENGINEER.
   - CONTRACTOR SHOULD SUBMIT SLAB DRAWINGS INDICATING ANY CONCENTRATION OF PIPES, OPENINGS OR PENETRATIONS NOT SHOWN ON THE STRUCTURAL DRAWINGS PRIOR TO CONCRETE POURS.
9. PLUMBING SLEEVES:
   - SLEEVE LOCATIONS AND SIZES MUST BE APPROVED BY THE ENGINEER PRIOR TO PLACEMENT.
   - MINIMUM SLEEVE SPACING SHALL BE THREE DIAMETERS CENTER TO CENTER OF THE LARGER SLEEVE OR 6" CLEAR BETWEEN SLEEVES, WHICHEVER IS GREATER.
   - SLEEVES OR GROUPS OF SLEEVES 16 INCH IN DIAMETER AND LARGER SHALL BE TREATED AS A SLAB OPENING AND REINFORCED PER TYPICAL OPENING REINFORCING DETAILS.
10. EMBEDDED CONDUITS:
   - LOCATIONS AND SIZES OF CONDUIT MUST BE APPROVED BY THE ENGINEER PRIOR TO PLACEMENT. WITHIN SLABS, BEAMS OR WALLS.
   - CONDUIT SHALL OCCUPY ONLY THE MIDDLE ONE-THIRD OF THE MEMBER DEPTH OR THICKNESS.
   - MAXIMUM CONDUIT O.D. FOR SINGLE CONDUITS OR SUM OF O.D.'S FOR MULTIPLE CONDUITS THAT CROSS SHALL BE NO LARGER THAN ONE-THIRD THE SLAB DEPTH.
   - PARALLEL CONDUITS SHALL BE SPACED WITH A MINIMUM OF 3 DIAMETERS CLEAR.
   - CONDUITS SHALL BE A MINIMUM OF ONE DIAMETER AWAY FROM AND SHALL NOT INTERFERE WITH OR DISPLACE ANY REINFORCING.
   - CONDUIT SHALL NOT BE TIED TO REINFORCING.
   - CONDUIT PLACEMENT SHALL NOT IMPAIR THE STRENGTH OF THE CONSTRUCTION AS JUDGED BY THE ENGINEER.

ABBREVIATIONS:

THE FOLLOWING ABBREVIATIONS MAY BE USED IN THE DRAWINGS.

#	NUMBER
&	AND
@	AT
ABV.	ABOVE
ADDL	ADDITIONAL
CC	CONCRETE COVER
C/C	CENTER TO CENTER SPACING
CONC	CONCRETE
DIA	DIAMETER
EA	EACH
FDTN	FOUNDATION
HP	HELICAL PILE
PL	PLATE
RC	REINFORCED CONCRETE
SPEC	SPECIFICATION
SQ	SQUARE
TO	TOP OF
TOC	TOP OF CONCRETE
TOS	TOP OF STEEL, TOP OF SLAB
TYP	TYPICAL
W/	WITH
W/O	WITHOUT

LEGENDS

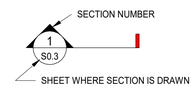

SECTION MARK

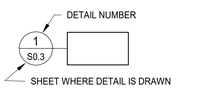

DETAIL MARK

SHEET INDEX

SHT NO.	DESCRIPTION
S-01	STRUCTURAL NOTES
S-02	GROUND FLOOR PLAN & SECTIONS

MUEngineers, Inc.
Certificate of Authorization No.29348
CONSULTING STRUCTURAL ENGINEERS
3440 N.E. 12TH AVENUE
OAKLAND PARK, FL 33334
PH: 954-324-4730

RICARDO A. MADRIZ
FL P.E. # 68444
FEBRUARY 09, 2024

RICARDO A. MADRIZ STATE OF FLORIDA, PROFESSIONAL ENGINEER, LICENSE NO: 68444

THIS ITEM HAS BEEN ELECTRONICALLY SIGNED AND SEALED BY RICARDO A. MADRIZ, P.E. ON THE DATE INDICATED HERE USING A SHA AUTHENTICATION CODE.

PRINTED COPIES OF THIS DOCUMENT ARE NOT CONSIDERED SIGNED AND SEALED AND THE SHA AUTHENTICATION CODE MAY BE VERIFIED ON ANY ELECTRONIC COPIES.

NOTE: MUE19022603
THESE DRAWINGS, ALONG WITH THE ARCHITECTURAL DRAWINGS, AND PROJECT MANUAL CONSTITUTE A SINGULAR CONTRACT DOCUMENT AND MUST BE USED TOGETHER IN THEIR ENTIRETY IN THE CONSTRUCTION OF THIS PROJECT.
TO THE BEST OF THE ENGINEER'S KNOWLEDGE, THE PLANS AND SPECIFICATIONS COMPLY WITH THE APPLICABLE MINIMUM BUILDING CODES AND THE APPLICABLE FIRE SAFETY STANDARDS AS DETERMINED BY THE LOCAL AUTHORITY IN ACCORDANCE WITH CHAPTER 553 AND CHAPTER 633 OF THE FLORIDA STATUTES.
DETAILS AND VIEWS ON THIS SHEET ARE TO SCALE INDICATED WHEN PRINTED ON A 24"X36" SIZE SHEET.

DRAWN BY:	DATE:
TW	02/09/2024
DESIGNED BY: TW	SCALE: 1/2" = 1'-0"
CHECKED BY: RM	
FIELD BOOK:	

CITY OF FORT LAUDERDALE
PUBLIC WORKS DEPARTMENT
ENGINEERING & ARCHITECTURE
100 North Andrews Avenue, Fort Lauderdale, Florida 33301

REVISIONS

NO.	DATE	BY	CHK'D	DESCRIPTION

PROJECT # 12479
STORM STATION 2
FIXED EMERGENCY GENERATORS
STRUCTURAL NOTES
399 S.E. 1ST AVE, FT LAUDERDALE, FL 33301

SHEET NO.
S-01

TOTAL:

CAD FILE:

DRAWING TYPE: STRUCTURAL

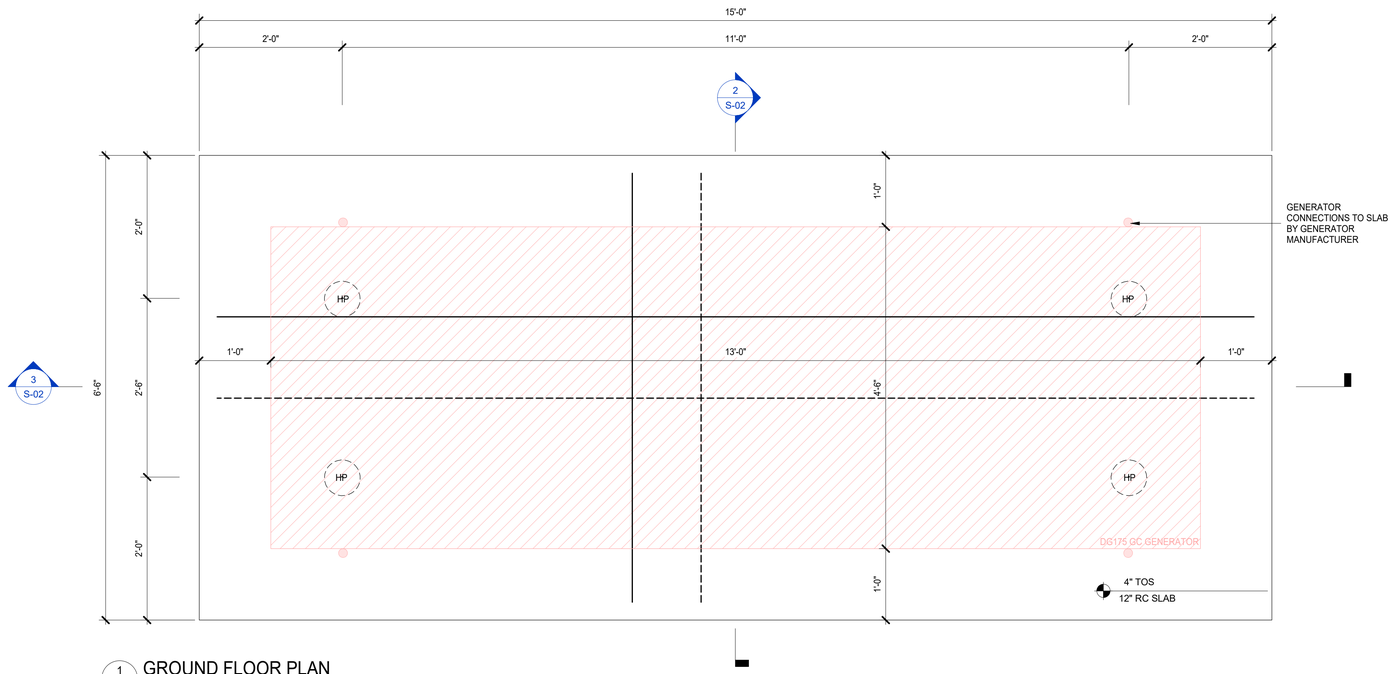

1 S-02 GROUND FLOOR PLAN
1" = 1'-0"

GROUND FLOOR PLAN NOTES:

1. FOR DIMENSIONS NOT SHOWN SEE FOUNDATION PLAN AND CIVIL DRAWINGS.
2. VERIFY ALL DIMENSIONS, ELEVATIONS AND SLAB FINISHES WITH CIVIL DRAWINGS BEFORE COMMENCING CONSTRUCTION.
3. PLUMBING PIPES, EXFILTRATION PIPES, ETC. SHALL MUST NOT BE LOCATED BELOW OR INSIDE OF THE FOUNDATION SLABS.
4. COORDINATE ALL SLAB OPENING SIZES AND LOCATIONS WITH ARCHITECTURAL AND CIVIL DRAWINGS.
5. ELEVATIONS SHOWN ON THE STRUCTURAL DRAWINGS REFER TO ELEVATION +0'-0" WHICH CORRESPONDS TO THE TOP OF THE FINISHED GRADE.
6. BOTTOM OF THE EMBED PLATES MUST NOT LESS THAN 3" ABOVE THE BASE OF THE RC SLAB.
7. SLAB CURING IS REQUIRED. SEE STRUCTURAL NOTES.
8. CONCRETE MIXES FOR ALL EXTERIOR CONCRETE COMPONENTS SHALL INCLUDE BARRIER ONE CONCRETE ADMIXTURE IN THEIR MIX DESIGNS.
9. PROVIDE (1) #5 CONTINUOUS TOP AND BOTTOM AT ALL SLAB EDGES.
10. REINFORCING BARS SHOWN ON PLANS AS SOLID LINES ARE TOP BARS AND BARS SHOWN AS DASHED LINES ARE BOTTOM BARS UNLESS SPECIFICALLY SHOWN OTHERWISE.
11. ALL REINFORCING BARS IN REINFORCING IN FOUNDATION SLABS MUST BE GALVANIZED REINFORCING.
12. (HP) REPRESENTS 3" DIAMETER, 20 KIPS BATTERED HELICAL PILE.

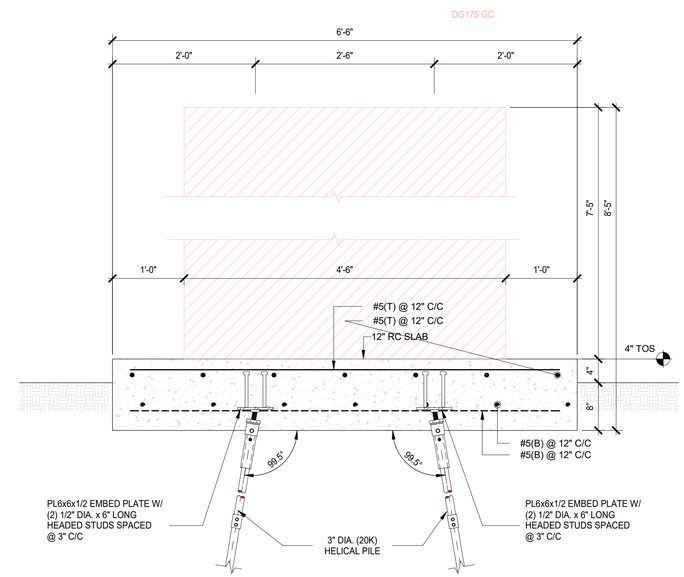

2 S-02 2/S-2.00
1" = 1'-0"

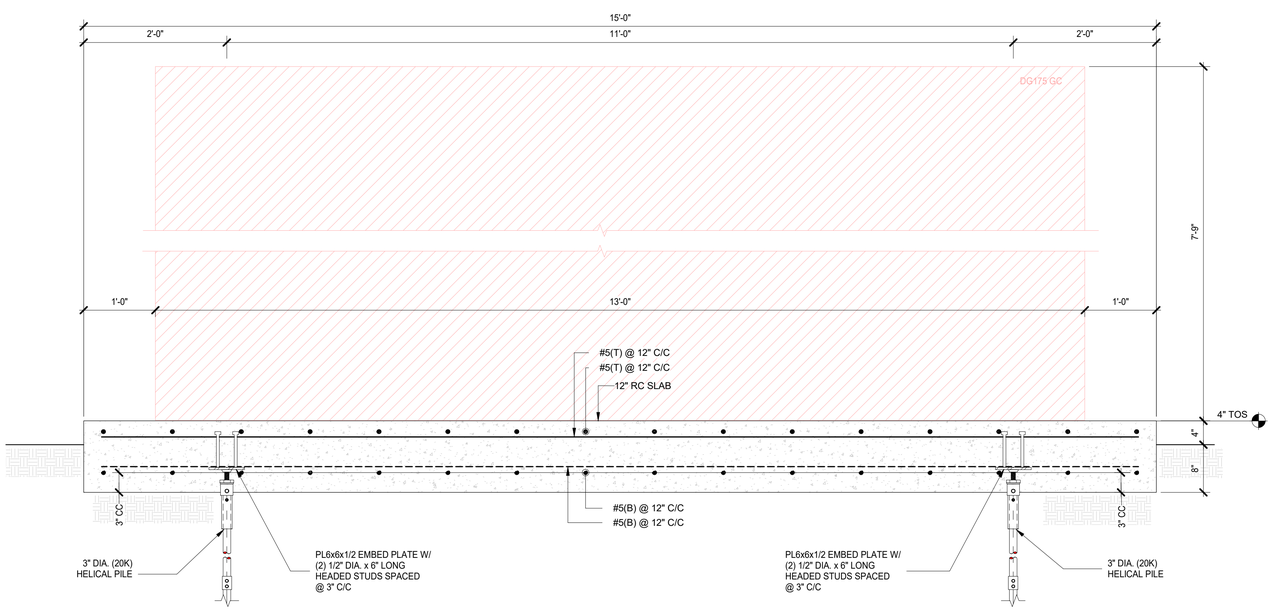

3 S-02 2/S-0.00
1" = 1'-0"

MUEngineers, Inc.
Certificate of Authorization No.29348
CONSULTING STRUCTURAL ENGINEERS
3440 N.E. 12TH AVENUE
OAKLAND PARK, FL 33334
PH: 954-324-4730

RICARDO A. MADRIZ
FL P.E. # 68444
FEBRUARY 09, 2024

RICARDO A. MADRIZ STATE OF FLORIDA, PROFESSIONAL ENGINEER, LICENSE NO: 68444

THIS ITEM HAS BEEN ELECTRONICALLY SIGNED AND SEALED BY RICARDO A. MADRIZ, P.E. ON THE DATE INDICATED HERE USING A SHA AUTHENTICATION CODE.

PRINTED COPIES OF THIS DOCUMENT ARE NOT CONSIDERED SIGNED AND SEALED AND THE SHA AUTHENTICATION CODE MAY BE VERIFIED ON ANY ELECTRONIC COPIES.

NOTE: MUE19022603
THESE DRAWINGS, ALONG WITH THE ARCHITECTURAL DRAWINGS, AND PROJECT MANUAL CONSTITUTE A SINGULAR CONTRACT DOCUMENT AND MUST BE USED TOGETHER IN THEIR ENTIRETY IN THE CONSTRUCTION OF THIS PROJECT.
TO THE BEST OF THE ENGINEER'S KNOWLEDGE, THE PLANS AND SPECIFICATIONS COMPLY WITH THE APPLICABLE MINIMUM BUILDING CODES AND THE APPLICABLE FIRE SAFETY STANDARDS AS DETERMINED BY THE LOCAL AUTHORITY IN ACCORDANCE WITH CHAPTER 553 AND CHAPTER 633 OF THE FLORIDA STATUTES.
DETAILS AND VIEWS ON THIS SHEET ARE TO SCALE INDICATED WHEN PRINTED ON A 24"X36" SIZE SHEET.

DRAWN BY: DW | DATE: 02/09/2024
DESIGNED BY: DW | SCALE: As indicated
CHECKED BY: RM | FIELD BOOK:

CITY OF FORT LAUDERDALE
PUBLIC WORKS DEPARTMENT
ENGINEERING & ARCHITECTURE
100 North Andrews Avenue, Fort Lauderdale, Florida 33301

REVISIONS

NO.	DATE	BY	CHK'D	DESCRIPTION

PROJECT # 12479
STORM STATION 2
FIXED EMERGENCY GENERATORS
GROUND FLOOR PLAN & SECTIONS
399 S.E. 1ST AVE, FT LAUDERDALE, FL 33301

SHEET NO.
S-02

TOTAL:
CAD FILE:
DRAWING TITLE:

ELECTRICAL LEGEND

SYMBOL	DESCRIPTION
	CONNECTION POINT TO EQUIPMENT SPECIFIED, FURNISHED AND INSTALLED UNDER OTHER SECTIONS. RACEWAY, CONDUCTOR AND CONNECTION IN THIS SECTION.
1"C,2#12,1#12G 1"C,1-25/C TYPE 1	INDICATES RACEWAY AND CIRCUIT CONDUCTORS. FIRST NUMBER IS RACEWAY SIZE. THE FOLLOWING NUMBERS ARE THE CONDUCTOR QUANTITIES, SIZES, AND TYPES.
5	MOTOR, SQUIRREL CAGE INDUCTION – HORSEPOWER INDICATED
X	LUMINAIRE AND POLE – SEE SCHEDULE FOR TYPE
X	WALL MOUNTED LUMINAIRE – SEE SCHEDULE FOR TYPE
	LIGHTING FIXTURE POWER AND SWITCHING LEGEND
X Y Z (TYP)	X=FIXTURE TYPE Y=PANEL–CIRCUIT BRKR Z=SWITCH IF NO Z INDICATED, CONNECT DIRECTLY TO CIRCUIT BREAKER.
	GROUND ROD – 3/4" x 20' COPPER CLAD UNLESS OTHERWISE NOTED
	GROUND ROD WITH TEST WELL – 3/4" x 20' COPPER CLAD UNLESS OTHERWISE NOTED
S	WALL SWITCH: 2– DOUBLE POLE, 3– THREE WAY, 4– FOUR WAY, WP–WEATHERPROOF; P– PILOT LIGHT, K– KEY OPERATED, D– DIMMER, CRE–CORROSION RESISTANT
S_M	MANUAL MOTOR STARTER SWITCH, NEMA 4X UNLESS OTHERWISE NOTED. NUMBER OF POLES AS REQUIRED
G	GENERATOR
	CONVENIENCE RECEPTACLE 20A RATED– DUPLEX UNLESS SPECIFIED OTHERWISE WP–WEATHERPROOF C– CLOCK HANGER TL– TWIST LOCK CRE–CORROSION RESISTANT GFI–GROUND FAULT INTERRUPTER
J	JUNCTION BOX NEMA 12 ENCLOSURE UNLESS INDICATED OTHERWISE. 4X = NEMA 4X SS
[B2]	CONDUIT/CONDUCTOR – REFER TO CIRCUIT SCHEDULE
LPA–2	HOME RUN – PANEL AND CIRCUIT NUMBER SHOWN
	DIRECT BURIED UNDERGROUND CONDUIT SEE SPECIFICATION
G	GROUND WIRE, 4/0 BARE TINNED COPPER (BTC) MAIN GROUND WITH MINIMUM #4 BTC GROUND TAIL UNLESS OTHERWISE NOTED
	EXPOSED CONDUIT AND CONDUCTORS
YCX	
	YARD CONDUIT. REFER TO YARD CONDUIT SCHEDULE
	DIRECTIONAL BORED CONDUIT
	CONDUIT, STUBBED AND CAPPED AS SHOWN
30 4X	NONFUSED DISCONNECT SWITCH, SIZE INDICATED, 3 POLE UNLESS INDICATED OTHERWISE, NEMA 12 ENCLOSURE, 4X = NEMA 4X 316 STAINLESS STEEL
F 40 60 4X	FUSED DISCONNECT SWITCH, SIZE INDICATED (60 = SWITCH RATING: 40 = FUSE RATING) 3 POLE UNLESS INDICATED OTHERWISE, NEMA 12 ENCLOSURE, 4X = NEMA 4X 316 STAINLESS STEEL
2 4X	MAGNETIC STARTER, NEMA SIZE INDICATED, NEMA 12 ENCLOSURE, UNLESS INDICATED OTHERWISE. SEE CONTROL DIAGRAM. 4X = NEMA 4X 316 STAINLESS STEEL
2 4X	COMBINATION (FUSE OR CIRCUIT BREAKER AS INDICATED). MAGNETIC STARTER, NEMA SIZE INDICATED, NEMA 12 ENCLOSURE UNLESS INDICATED OTHERWISE. SEE CONTROL SCHEMATIC DIAGRAM. 4X = NEMA 4X 316 STAINLESS STEEL

SYMBOL	DESCRIPTION
120V or 480–120/208V 15 KVA, 3ø	TRANSFORMER, VOLTAGES, PHASE AND RATING INDICATED AS APPLICABLE
	PUSH–BUTTON SWITCH, MOMENTARY CONTACT, NORMALLY OPEN
	PUSH–BUTTON SWITCH, MOMENTARY CONTACT, NORMALLY CLOSED
	REMOTE DEVICE
H O A 1 XOO 2 OOX	SELECTOR SWITCH: MAINTAINED CONTACT WITH CONTACT POSITION INDICATED, CHART IDENTIFIES OPERATION
CRX	CONTACT – NORMALLY OPEN WITH COIL INDICATED
CRX	CONTACT – NORMALLY CLOSED WITH COIL INDICATED
	OVERLOAD RELAY HEATER
1	MAGNETIC STARTER WITH NEMA SIZE INDICATED
MCP	MOTOR CIRCUIT PROTECTOR, MAGNETIC, 3 POLE UNLESS INDICATED OTHERWISE.
400	CIRCUIT BREAKER, THERMAL MAGNETIC TRIP SHOWN, 3 POLE UNLESS INDICATED OTHERWISE.
400 225	FUSED SWITCH, SWITCH AND FUSE CURRENT RATING INDICATED, 3 POLE UNLESS INDICATED OTHERWISE.
100	SWITCH – CURRENT RATING INDICATED, 3 POLE UNLESS INDICATED OTHERWISE.
TVSS	TRANSIENT VOLTAGE SURGE SUPPRESSION
	DEMOLITION TO BE REMOVED OR DELETED
	FUSE
CRX	CONTROL RELAY, X=SEQUENTIAL NUMBER
LRX (L)	LATCHING RELAY, X=SEQUENTIAL NUMBER L – LATCH, U – UNLATCH
	LINE WEIGHT NEW EXISTING

CKT.	POSITION HAND	OFF	AUTO
1	X	O	O
2	O	O	X

X – CLOSED CONTACT
O – OPEN CONTACT

ABBREVIATIONS

ABBREVIATIONS	DESCRIPTION
ACCP	ACCESS CONTROL – CONTROL PANEL
AFG	ABOVE FINISHED GRADE
AIT	ANALYTICAL INSTRUMENT TRANSMITTER
AE	ANALYTICAL ELEMENT
BC	BARE COPPER
BTC	BARE TINNED COPPER
C	CONDUIT, CONTACTOR
CB	CIRCUIT BREAKER
CKT	CIRCUIT
COND	CONDUCTIVITY
CPT	CONTROL POWER TRANSFORMER
CR	CONTROL RELAY
CT	CURRENT TRANSFORMER
ETM	ELAPSED TIME METER
EXST	EXISTING
F, FU	FUSE
FI	FLOW INDICATOR
FM	FLOW METER
FPL	FLORIDA POWER & LIGHT
FT	FLOW TRANSMITTER
FVNR	FULL VOLTAGE NON–REVERSING STARTER
	GREEN, GROUND
GALV	GALVANIZED
GEN	GENERATOR
GFI	GROUND FAULT INTERRUPTER
GND	GROUND
HH	HANDHOLE
HOA	HAND/OFF/AUTO
HOR	HAND/OFF/REMOTE
HVAC	HEATING, VENTILATING & AIR CONDITIONING
IC	INTERRUPTING CAPACITY
I & C	INSTRUMENTATION AND CONTROL
IP	INSTRUMENT PANEL (PANELBOARD)
J, J–BOX	JUNCTION BOX
LC	LIGHTING CONTACTOR
LR	LOCAL/REMOTE
LS	LIMIT SWITCH
LT/TT/CT	LEVEL/TEMPERATURE/ CONDUCTIVITY
M	MAGNETIC CONTACTOR COIL OR MOTOR
MCC	MOTOR CONTROL CENTER
MCP	MOTOR CIRCUIT PROTECTOR
MDP	MAIN DISTRIBUTION PANEL
MH	MOTOR HEATER, MANHOLE
MLO	MAIN LUGS ONLY
MPZ	MINI POWER ZONE
MSC	MANUFACTURER SUPPLIED CABLE
MTD	MOTOR TEMPERATURE DETECTOR
N	NEUTRAL
NC	NORMALLY CLOSED
NEC	NATIONAL ELECTRIC CODE
NEMA	NATIONAL ELECTRIC MANUFACTURER'S ASSOCIATION
NO	NORMALLY OPEN
NTS	NOT TO SCALE
OL	OVERLOAD RELAY

ABBREVIATIONS

ABBREVIATIONS	DESCRIPTION
PB	PULL BOX
PCM	EXISTING PLANT CONTROL PANEL
PDB	POWER DISTRIBUTION BLOCK
PH	PHASE MONITOR
PM	POWER MONITOR
PNL	PANEL
PP	POWER PANEL (480VAC)
PS	PRESSURE SWITCH
PVC	POLYVINYL CHLORIDE CONDUIT
RTU	REMOTE TELEMETRY UNIT
RGS	RIGID GALVANIZED STEEL
SF	SUPPLY FAN
SH	SPACE HEATER
SSRVS	SOLID STATE REDUCED VOLTAGE STARTER
SS	316 STAINLESS STEEL
SV	SOLENOID VALVE
SW	SWITCH
T	THERMOSTAT
TB	TERMINAL BOARD
TEMP	TEMPERATURE
TJB	TERMINAL JUNCTION BOX
TSP	TWISTED SHIELDED PAIR
TVSS	TRANSIENT VOLTAGE SURGE SUPPRESSION
TYP	TYPICAL
V	VOLTMETER, VOLT
VD	VOLTAGE DROP
VFD	VARIABLE FREQUENCY DRIVE
WP	WEATHERPROOF – NEMA 4X
XFMR	TRANSFORMER

GENERAL NOTES:

1. THE SCOPE OF WORK IS DESCRIBED IN SPECIFICATIONS AND DRAWINGS.
2. THE CONTRACTOR SHALL PROVIDE ALL MATERIALS AND LABOR TO INSTALL THE ELECTRICAL SYSTEMS AS INDICATED PER PLANS AND SPECIFICATIONS. ITEMS NOT SHOWN BUT NECESSARY FOR COMPLETION OF THE WORK SHALL BE INCLUDED.
3. THE INSTALLATION SHALL BE IN ACCORDANCE WITH THE NATIONAL ELECTRICAL CODE, NATIONAL ELECTRICAL SAFETY CODE, LOCAL CODES, CITY CODES AND FLORIDA BUILDING CODES WITH AMENDMENTS.
4. THE CONTRACTOR SHALL, BEFORE SUBMITTING HIS BID, VISIT THE SITE OF THE PROJECT AND BECOME FAMILIAR WITH THE EXISTING CONDITIONS. NO ALLOWANCE WILL BE MADE FOR EXISTING CONDITIONS OR FAILURE OF THE CONTRACTOR TO OBSERVE THEM.
5. IT IS THE CONTRACTOR'S RESPONSIBILITY TO COORDINATE WITH ALL LOCAL UTILITIES, INCLUDING THE POWER UTILITY TO MEET ALL OF THEIR INSTALLATION REQUIREMENTS. ALL FEES, LABOR, EQUIPMENT OR MATERIALS NECESSARY TO MEET THESE REQUIREMENTS IS TO BE INCLUDED IN THE BID.
   FPL REPRESENTATIVE: JESSAN JACQUET, PHONE: 954–717–2134, EMAIL: JESSAN.JACQUET@FPL.COM
6. ALL CONTRACTOR EQUIPMENT AND MATERIAL SHALL BE NEW, UNUSED AND U.L. LISTED.
7. THE CONTRACTOR IS RESPONSIBLE TO TEST ALL SYSTEMS INSTALLED OR MODIFIED UNDER THIS PROJECT AND REPAIR OR REPLACE ALL DEFECTIVE WORK TO THE SATISFACTION OF THE ENGINEER AND OWNER.
8. COORDINATE ALL ELECTRICAL EQUIPMENT LOCATIONS AND VERIFY ALL OBSTRUCTIONS WITH ALL SUBCONTRACTORS AND EQUIPMENT SUPPLIERS PRIOR TO ANY INSTALLATION.
9. CONTRACTOR SHALL LOCATE ALL EXISTING UNDERGROUND UTILITIES BEFORE ANY DIGGING.
10. MINIMUM DEPTH FROM TOP OF DUCTBANKS OR CONDUITS TO FINISHED GRADE SHALL BE 24".
11. ALL EXCAVATIONS FOR CONDUITS AND HANDHOLES, NEAR EXISTING PIPING, CONDUIT AND EQUIPMENT SHALL BE HAND EXCAVATED AND COORDINATED WITH PLANT ENGINEER.
12. CONDUCTOR PULLING TENSIONS SHALL NOT EXCEED MANUFACTURER'S RECOMMENDATION. CONTRACTOR SHALL INSTALL PULL BOXES TO MEET MANUFACTURER'S REQUIREMENTS.
13. ALL CONDUCTORS SHALL BE 600V, U.L. LISTED. POWER CABLES SHALL BE TYPE THHN/THWN EXCEPT FOR SIZES NO. 6 AND LARGER USE XHHW INSULATION. INSTRUMENTATION CABLE SHALL BE TYPE B, #16 TWISTED SHIELDED CABLE. ALL CONDUCTING MEDIA SHALL BE COPPER. NO ALUMINUM ALLOWED.
14. EXPOSED CONDUIT SHALL BE RIGID ALUMINUM, UNDERGROUND CONDUIT SHALL BE SCHEDULE 40 PVC UNLESS OTHERWISE NOTED. TRANSITION FROM UNDERGROUND TO EXPOSED CONDUIT SHALL BE RIGID ALUMINUM. TRANSITION SHALL BE IN UNDERGROUND. APPLY TWO COATS OF BITUMASTIC PAINT TO ALL ALUMINUM CONDUITS WHERE CONTACT WITH CONCRETE FLOOR SLABS.
15. FLEXIBLE CONDUITS SHALL BE USED TO TERMINATE ALL MOTORS AND OTHER VIBRATING EQUIPMENT AND SHALL BE BETWEEN 18" AND 3' IN LENGTH.
16. CONTRACTOR SHALL RESTORE SIDEWALKS, ROADWAYS, SOD AND SPRINKLER SYSTEM PIPING TO MATCH EXISTING, AFTER THE COMPLETION OF THE CONDUIT AND PULLBOX INSTALLATION.
17. ALL MATERIAL IN DESIGNATED CORROSIVE AREAS SHALL BE NEMA 4X 316 STAINLESS STEEL OR NON–METALLIC.
18. ALL CONTROL PANELS SHALL BE CONSTRUCTED BY A UL 508A APPROVED PANEL VENDOR AND SHALL BEAR A UL 508A LABEL ON THE PANEL.
19. PROVIDE ENOUGH WORKING CLEARANCE PER NEC IN FRONT OF ALL ELECTRICAL PANELS. MAINTAIN MINIMUM 42" CLEARANCE IN FRONT OF ATS PANELS.
20. CONTRACTOR SHALL BE RESPONSIBLE FOR ALL ADDITIONAL CONDUIT AND WIRING AND INSTALLATION FOR ALL VENDOR PROVIDED EQUIPMENT (PACKAGE SYSTEMS) WITHOUT ANY ADDITIONAL COST TO THE OWNER. ADJUST ALL BREAKERS IN MCC'S AND PANELBOARDS ACCORDINGLY WITHOUT ANY ADDITIONAL COST.
21. MINIMUM DISTANCE ALLOWED BETWEEN POWER CONDUITS AND INSTRUMENTATION/GENERATOR REMOTE ANNUNCIATOR CONDUITS SHALL BE:

VOLTAGE	DISTANCE
480V	2 FT
120V	1 FT

22. ALL ELECTRICAL PANELS SHALL BE MOUNTED ABOVE THE REQUIRED FLOOD ELEVATION. CONTRACTOR SHALL COORDINATE WITH THE BUILDING DEPARTMENT AND THE LATEST FEMA MAP.

ENGINEER: Paul F. Hillers
REG. No: 41022
DATE: 02/02/24
TEL: (561) 451-9165
FAX: N/A

DRAWN BY: TN | DATE: 2/8/2024
DESIGNED BY: PFH | SCALE: AS NOTED
CHECKED BY: JD | FIELD BOOK:

CITY OF FORT LAUDERDALE
PUBLIC WORKS DEPARTMENT
ENGINEERING & ARCHITECTURE
100 North Andrews Avenue, Fort Lauderdale, Florida 33301

REVISIONS

NO.	DATE	BY	CHK'D	DESCRIPTION
1	8/25/2021	PFH		FTL BLDG DEPT COMMENTS

PROJECT # P12479
STORMSTATION 2
FIXED EMERGENCY GENERATOR

ELECTRICAL LEGEND & GENERAL NOTES

SHEET NO. E-01
TOTAL:
CAD FILE: E-01
DRAWING FILE NO. 4-144-23

E:\PROJECTS\CA\CA98\DRAWINGS\SS2\SS2 DRAWINGS\E-01.DWG

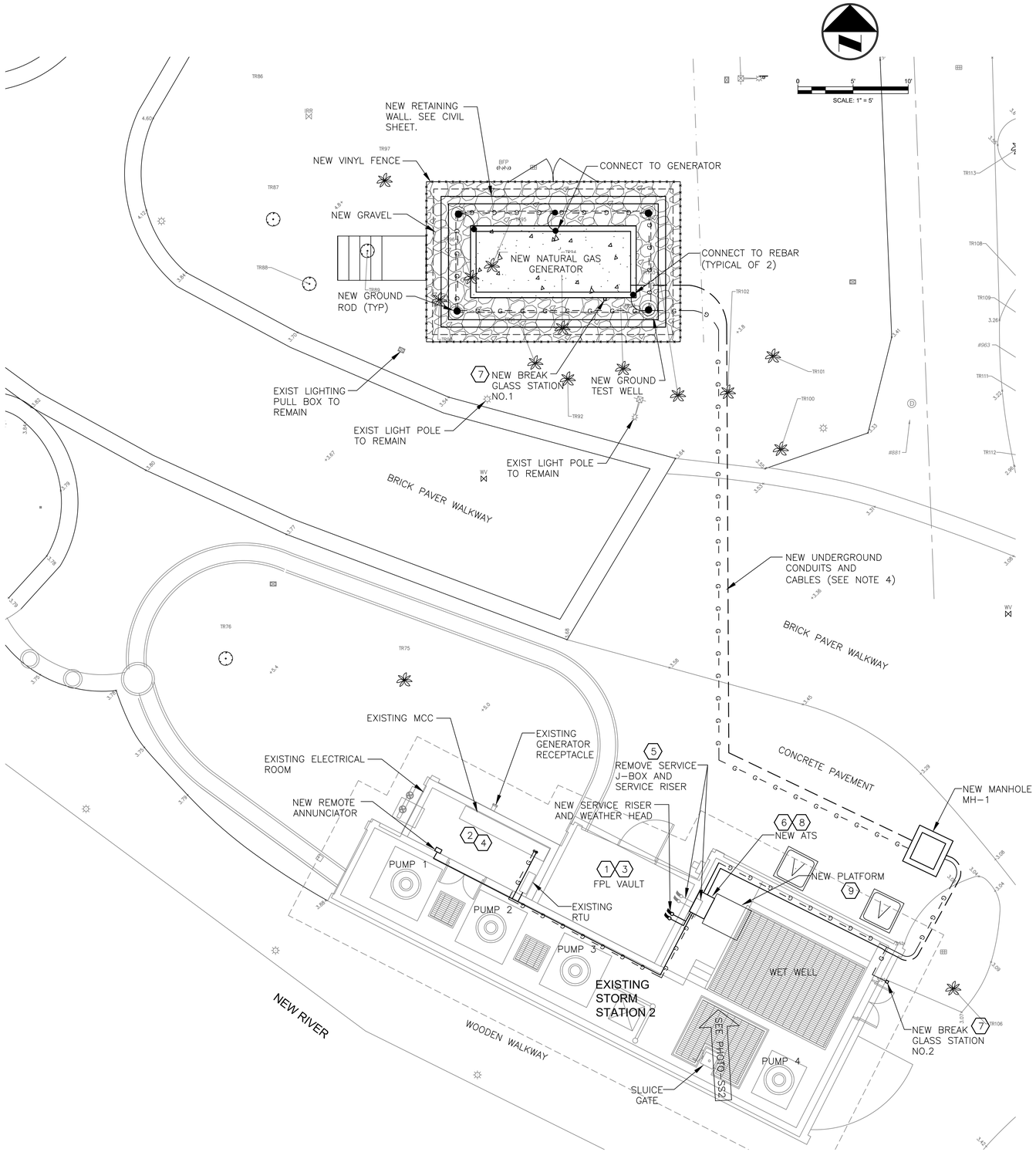

STORM STATION 2 - PROPOSED ELECTRICAL PLAN

SCALE: 1" = 5'

STORMSTATION 2 ADDRESS: 399 SE 1ST AVE, FORT LAUDERDALE, FL 33301

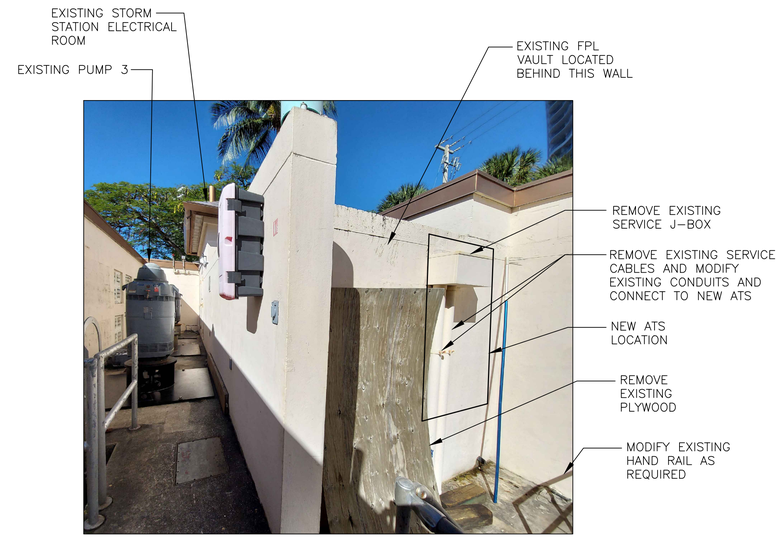

PHOTO-SS2: EXISTING STORM STATION 2

NOT TO SCALE

KEYED NOTES:

1. CONTRACTOR SHALL COORDINATE WITH FPL FOR ELECTRICAL SERVICE DISCONNECT.
2. STORM STATION SHALL BE IN SERVICE AT ALL TIME. PROVIDE TEMPORARY POWER (150KW DIESEL GENERATOR WITH SOUND ATTENUATED ENCLOSURE) AND NECESSARY CABLES AND CONNECTORS INCLUDING FUEL DURING ELECTRICAL SERVICE MODIFICATION.
3. CONTRACTOR SHALL COORDINATE WITH FPL FOR ELECTRICAL SERVICE RECONNECT. COORDINATE NEW SERVICE CONDUIT ENTRY LOCATION TO THE EXISTING FPL VAULT.
4. CONTRACTOR SHALL PROVIDE A NEW BREAKER BUCKET WITH SURGE PROTECTIVE DEVICE (SPD) IN THE EXISTING WESTINGHOUSE POWER MASTER MCC. PROVIDE NECESSARY BLANK COVER IN EXISTING MCC.
5. CONTRACTOR SHALL REMOVE THE EXISTING SERVICE CABLES. MODIFY THE EXISTING CONDUITS AND CONNECT TO NEW ATS.
6. CONTRACTOR SHALL INSTALL NEW ATS, GENERATOR, CONDUITS AND CABLES PRIOR TO DEMOLITION OF THE EXISTING SERVICE CABLES. SWITCHOVER SHALL NOT BE MORE THAN 3 WORKING DAYS. CONTRACTOR SHALL COORDINATE WITH THE OWNER AND GET APPROVAL.
7. NEW BREAK GLASS STATIONS SHALL BE OUTDOOR RATED WITH MULTIPLE ISOLATED CONTACTS. PROVIDE WEATHER RESISTANT SIGNAGE NEXT TO THE BREAK GLASS STATION INDICATING THAT "STORM STATION IS EQUIPPED WITH A STANDBY GENERATOR. BREAK GLASS AND PUSH TO SHUT DOWN BOTH UTILITY POWER AND GENERATOR POWER".
8. CONTRACTOR SHALL PROVIDE LEGALLY REQUIRED SIGNS FOR STANDBY SYSTEMS AS PER NEC 701.7(A), AT THE SERVICE ENTRANCE EQUIPMENT INDICATING TYPE AND LOCATION OF THE GENERATOR.
9. CONTRACTOR SHALL PROVIDE A NEW 12-INCH HIGH MARINE GRADE ALUMINUM PLATFORM MINIMUM OF 36"WX42"L.

NOTES:

1. CONDUIT ROUTING AND MANHOLE LOCATION ARE SHOWN FOR ILLUSTRATION PURPOSE. CONTRACTOR SHALL FIELD ADJUST AS REQUIRED.
2. MAINTAIN MINIMUM OF 42" CLEARANCE IN FRONT OF ATS PANEL.
3. CORE DRILL EXISTING CONCRETE WALL FOR NEW CONDUIT INSTALLATION AND REPAIR TO MATCH EXISTING.
4. REMOVE BRICK PAVER AND SAWCUT THE EXISTING CONCRETE PAVEMENT FOR NEW CONDUIT INSTALLATION. RESTORE BRICK PAVER AND CONCRETE PAVEMENT TO MATCH EXISTING.
5. SEE GENERAL NOTE 21 ON DRAWING E-01 FOR CONDUIT SEPARATION BETWEEN POWER AND INSTRUMENTATION/GENERATOR REMOTE ANNUNCIATOR.
6. CONTRACTOR SHALL MODIFY EXISTING HANDRAIL IN FRONT OF ATS AS REQUIRED.

ENGINEER: Paul F. Hillers
REG. No: 41022
DATE: 02/02/24
TEL: (561) 451-9165
FAX: N/A

DRAWN BY: TN | DATE: 2/8/2024
DESIGNED BY: PFH | SCALE: AS NOTED
CHECKED BY: JD | FIELD BOOK:

CITY OF FORT LAUDERDALE
PUBLIC WORKS DEPARTMENT
ENGINEERING & ARCHITECTURE
100 North Andrews Avenue, Fort Lauderdale, Florida 33301

REVISIONS

NO.	DATE	BY	CHK'D	DESCRIPTION
1	8/25/2021	PFH		FTL BLDG DEPT COMMENTS

PROJECT # P12479
STORMSTATION 2
FIXED EMERGENCY GENERATOR
PROPOSED ELECTRICAL SITE PLAN

SHEET NO. E-02
TOTAL:
CAD FILE: E-02
DRAWING FILE NO. 4-144-23

E:\PROJECTS\CA\CA98\DRAWINGS\SS2\SS2 DRAWINGS\E-02.DWG

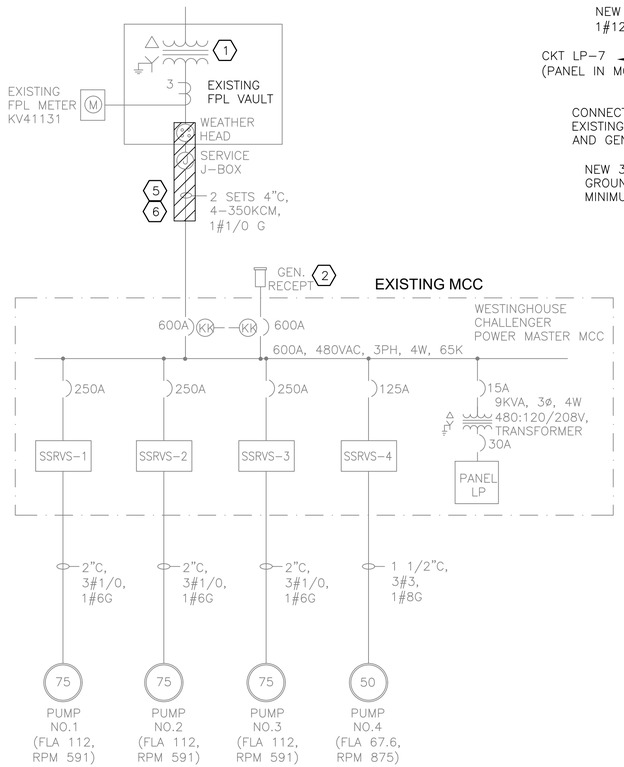

STORM STATION 2 ELECTRICAL ONE LINE - DEMOLITION

NOT TO SCALE

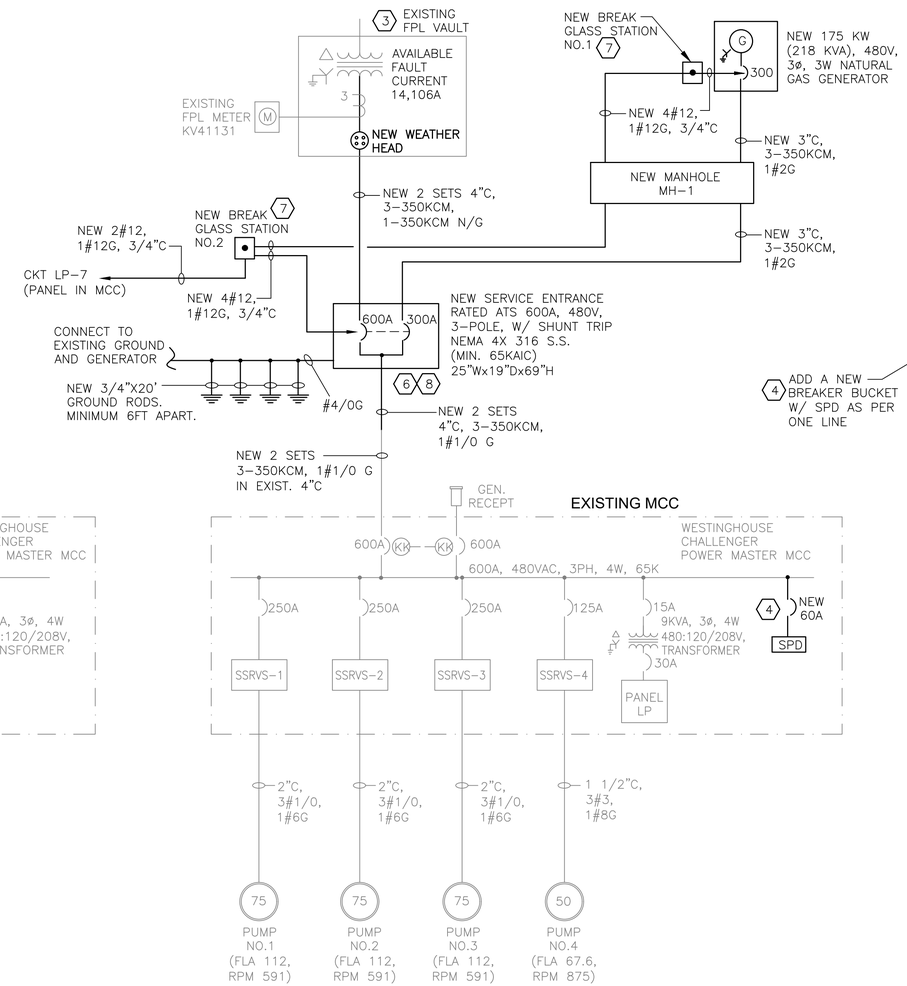

STORM STATION 2 ELECTRICAL ONE LINE - PROPOSED

NOT TO SCALE

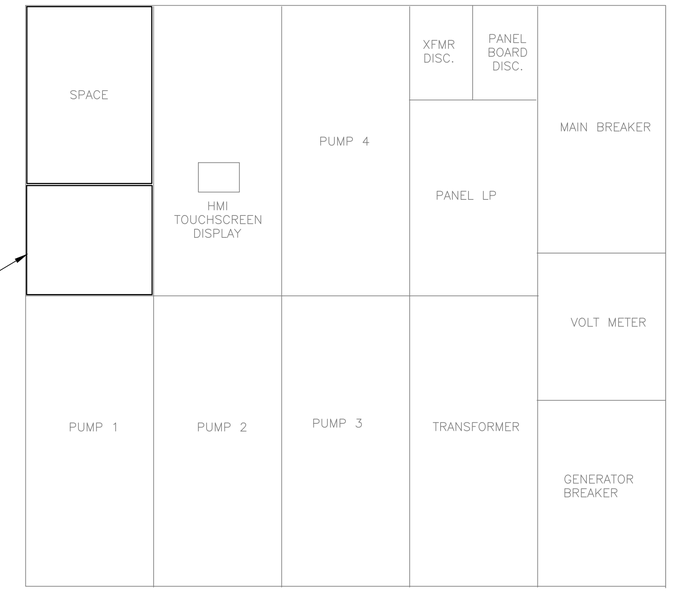

ADD A NEW BREAKER BUCKET W/ SPD AS PER ONE LINE

EXISTING MCC ELEVATION VIEW

NOT TO SCALE

SERVICE CALCULATION @ 480V, 3-PHASE

	CONNECTED	NORMAL POWER RUNNING	GENERATOR POWER RUNNING
PUMP 1	112.0 A	95.2 A	95.2 A
PUMP 2	112.0 A	95.2 A	0.0 A
PUMP 3	112.0 A	0.0 A	0.0 A
PUMP 4	67.6 A	0.0 A	0.0 A
XFMR / PANEL LP	10.8 A	9.2 A	9.2 A
25% OF LARGEST MOTOR	28.0 A	0.0 A	0.0 A
TOTAL LOADS (AMPS)	442.4 A	199.6 A	104.4 A
TOTAL LOADS (KVA)	367.8 KVA	166.0 KVA	86.8 KVA

KEYED NOTES:

1. CONTRACTOR SHALL COORDINATE WITH FPL FOR ELECTRICAL SERVICE DISCONNECT.
2. STORM STATION SHALL BE IN SERVICE AT ALL TIME. PROVIDE TEMPORARY POWER (150KW DIESEL GENERATOR WITH SOUND ATTENUATED ENCLOSURE) AND NECESSARY CABLES AND CONNECTORS INCLUDING FUEL DURING ELECTRICAL SERVICE MODIFICATION.
3. CONTRACTOR SHALL COORDINATE WITH FPL FOR ELECTRICAL SERVICE RECONNECT. COORDINATE NEW SERVICE CONDUIT ENTRY LOCATION TO THE EXISTING FPL VAULT.
4. CONTRACTOR SHALL PROVIDE A NEW BREAKER BUCKET WITH SURGE PROTECTIVE DEVICE (SPD) IN THE EXISTING WESTINGHOUSE POWER MASTER MCC. PROVIDE NECESSARY BLANK COVER IN EXISTING MCC.
5. CONTRACTOR SHALL REMOVE THE EXISTING SERVICE CABLES. MODIFY THE EXISTING CONDUITS AND CONNECT TO NEW ATS.
6. CONTRACTOR SHALL INSTALL NEW ATS, GENERATOR, CONDUITS AND CABLES PRIOR TO DEMOLITION OF THE EXISTING SERVICE CABLES. SWITCHOVER SHALL NOT BE MORE THAN 3 WORKING DAYS. CONTRACTOR SHALL COORDINATE WITH THE OWNER AND GET APPROVAL.
7. NEW BREAK GLASS STATIONS SHALL BE OUTDOOR RATED WITH MULTIPLE ISOLATED CONTACTS. PROVIDE WEATHER RESISTANT SIGNAGE NEXT TO THE BREAK GLASS STATION INDICATING THAT "STORM STATION IS EQUIPPED WITH A STANDBY GENERATOR. BREAK GLASS AND PUSH TO SHUT DOWN BOTH UTILITY POWER AND GENERATOR POWER".
8. CONTRACTOR SHALL PROVIDE LEGALLY REQUIRED SIGNS FOR STANDBY SYSTEMS AS PER NEC 701.7(A), AT THE SERVICE ENTRANCE EQUIPMENT INDICATING TYPE AND LOCATION OF THE GENERATOR.

ENGINEER: Paul F. Hillers
REG. No: 41022
DATE: 02/02/24
TEL: (561) 451-9165
FAX: N/A

DRAWN BY: TN
DATE: 2/8/2024
DESIGNED BY: PFH
SCALE: AS NOTED
CHECKED BY: JD
FIELD BOOK:

CITY OF FORT LAUDERDALE
PUBLIC WORKS DEPARTMENT
ENGINEERING & ARCHITECTURE
100 North Andrews Avenue, Fort Lauderdale, Florida 33301

REVISIONS

NO.	DATE	BY	CHK'D	DESCRIPTION
1	8/25/2021	PFH		FTL BLDG DEPT COMMENTS

PROJECT # P12479
STORMSTATION 2
FIXED EMERGENCY GENERATOR
ELECTRICAL ONE LINE DIAGRAM

SHEET NO. E-03
TOTAL:
CAD FILE: E-03
DRAWING FILE NO. 4-144-23

E:\PROJECTS\CA\CA98\DRAWINGS\SS2\SS2 DRAWINGS\E-03.DWG

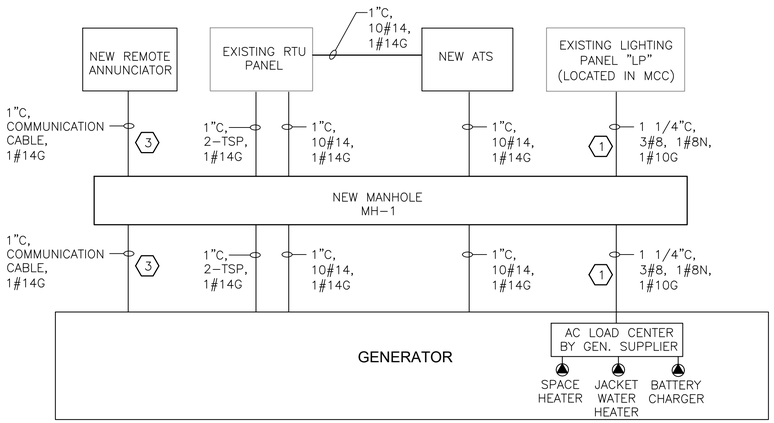

GENERATOR RISER DIAGRAM

NOT TO SCALE

STORM STATION 2 EXISTING LIGHTING PANEL "LP" SCHEDULE

BUS AMPS A	BUS AMPS B	BUS AMPS C	LOAD	POLES	AMPS	BUS A B C	AMPS	POLES	LOAD	BUS AMPS A	BUS AMPS B	BUS AMPS C
10.0			GEN. AC LOAD CENTER (1)(2)	3	30	1 2			SPACE	–		
	10.0					3 4			SPACE		–	
		10.0				5 6			SPACE			–
0.5			BREAK GLASS STATION	1	20	7 8	15	1	ALARM CIRCUIT	1.0		
	–		SPARE	1	20	9 10	30	3	SLUICE GATE MOTOR (NOT USED)		–	
		4.8	AIR CONITION	2	20	11 12						–
4.8						13 14				–		
	–		SPARE	1	20	15 16	20	1	SPARE		–	
		1.0	RTU	1	20	17 18	20	1	INSIDE LIGHTS & GFI BY DOOR			3.0
–			AIR COMPRESSOR (NOT USED)	1	20	19 20	20	3	PHASE MONITOR	0.5		
	9.0		MOTOR HEATERS 1, 2, 3	1	20	21 22					0.5	
		3.0	OUTSIDE LIGHTS AND GFI	1	20	23 24						0.5

TOTAL AMPS: BUS A 16.8 BUS B 19.5 BUS C 22.3 CONNECTED Kva 7.0

RATED VOLTAGE: ■ 120/208 ☐ 480 3 PHASE, 4 WIRE | BRANCH POLES ☐ 12 ☐ 20 ■ 24 ☐ 42

RATED AMPS: ■ 100 ☐ 225 ☐ 400 ☐ _____ | CABINET: ■ SURFACE ☐ FLUSH

NEUTRAL BUS ☐ 100% ■ 150% ☐ 200% | ■ GROUND BUS | ■ HINGED DOOR | ■ KEYED DOOR LATCH | LOCATION: INSIDE MCC

■ CIRCUIT BREAKER (BOLT-IN) BRANCH DEVICES | ■ TVSS | ENCLOSURE TYPE ■ NEMA 1 ☐ NEMA 3R ☐ NEMA 4X ☐ _____

■ MAIN LUGS ONLY | MAIN ___ AMPS ☐ BREAKER | ☐ _____ TO BE GFI BREAKERS

PANELBOARD MUST BE RATED TO INTERRUPT A SHORT CIRCUIT ISC OF ____10,000 AMPS SYMMETRICAL.

MF'RS. WESTINGHOUSE, POW-R-LINE, PRL1 TYPE | COPPER BUSSES | MAIN LUGS ____ SETS SIZE: _____

KEYED NOTES:

1. CONTRACTOR SHALL COORDINATE WITH GENERATOR SUPPLIER FOR AC LOAD CENTER POWER REQUIREMENT AND ADJUST THE SIZES OF BREAKERS, CONDUITS AND CABLES ACCORDINGLY. CONTRACTOR SHALL BALANCE THE EXISTING PANEL LOADS AS REQUIRED AND PROVIDE UPDATED PANEL SCHEDULE.
2. CONTRACTOR SHALL PROVIDE NEW BREAKERS IN EXISTING LIGHTING PANEL LP (WESTINGHOUSE PRL1 PANELBOARD) AS SHOWN IN PANEL SCHEDULE.
3. CONTRACTOR SHALL COORDINATE WITH GENERATOR SUPPLIER FOR REMOTE ANNUNCIATOR COMMUNICATION CABLE REQUIREMENT AND PROVIDE ACCORDINGLY.

ENGINEER: Paul F. Hillers
REG. No: 41022
DATE: 02/02/24
TEL: (561) 451-9165
FAX: N/A

DRAWN BY: TN | DATE: 2/8/2024
DESIGNED BY: PFH | SCALE: AS NOTED
CHECKED BY: JD | FIELD BOOK:

CITY OF FORT LAUDERDALE
PUBLIC WORKS DEPARTMENT
ENGINEERING & ARCHITECTURE
100 North Andrews Avenue, Fort Lauderdale, Florida 33301

REVISIONS

NO.	DATE	BY	CHK'D	DESCRIPTION
1	8/25/2021	PFH		FTL BLDG DEPT COMMENTS

PROJECT # P12479
STORMSTATION 2
FIXED EMERGENCY GENERATOR

ELECTRICAL RISER & PANEL SCHEDULE

SHEET NO. E-04
TOTAL:
CAD FILE: E-04
DRAWING FILE NO. 4-144-23

E:\PROJECTS\CA\CA98\DRAWINGS\SS2\SS2 DRAWINGS\E-04.DWG

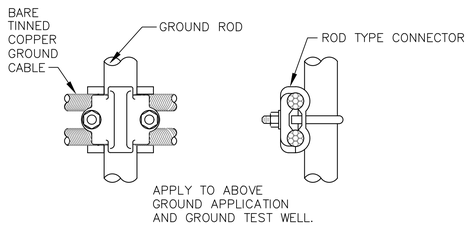

CABLE TO ROD CONNECTION
NOT TO SCALE

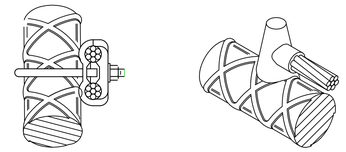

COPPER CONDUCTOR TAP TO HORIZONTAL REINFORCING BAR (REBAR) LOCATED NEAR THE BOTTOM OR VERTICALLY, WITHIN THAT PORTION OF CONCRETE FOUNDATION OR FOOTING. CONDUCTOR SIZE IS #4/0 BTC. MINIMUM DIAMETER OF REBAR IS 1/2". MINIMUM LENGTH OF REBAR IS 20'.

GROUND CABLE TO REBAR CONNECTIONS
NOT TO SCALE

NOTES:
1. THIS DETAIL TYPICAL FOR BOTH VERTICAL AND HORIZONTAL MOUNTING
2. CHANNEL AND ALL SUPPORT DEVICES TO BE 316 STAINLESS STEEL.
3. CHANNELS TO BE SPACED 5' MAXIMUM.

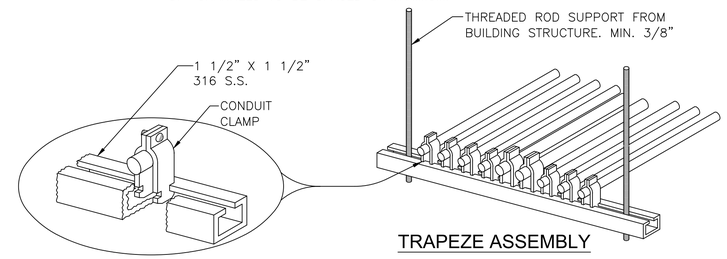

CONDUIT PIPE STRAP MOUNTING DETAILS

TRAPEZE ASSEMBLY

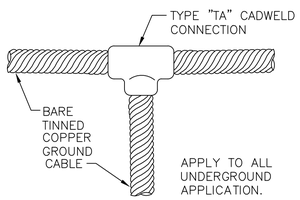

GROUND CABLE CONNECTION
NOT TO SCALE

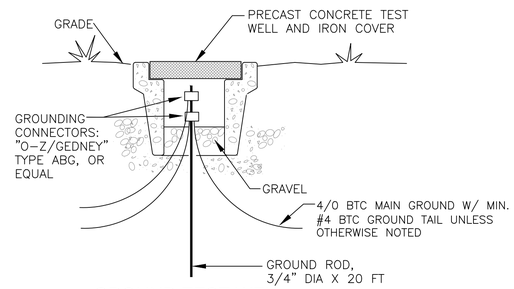

GROUND TEST WELL
NOT TO SCALE

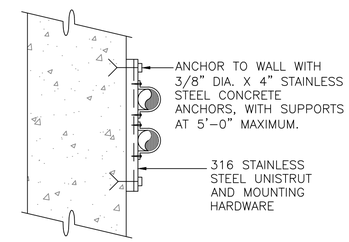

CONDUIT SUPPORT ON WALL
NOT TO SCALE

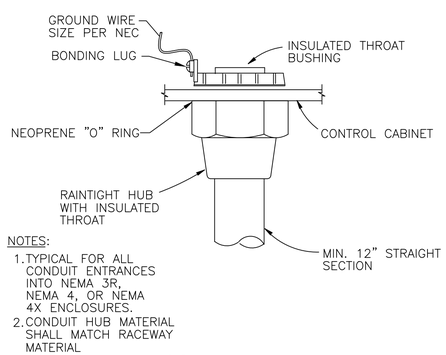

NOTES:
1. TYPICAL FOR ALL CONDUIT ENTRANCES INTO NEMA 3R, NEMA 4, OR NEMA 4X ENCLOSURES.
2. CONDUIT HUB MATERIAL SHALL MATCH RACEWAY MATERIAL

CONDUIT HUB
NOT TO SCALE

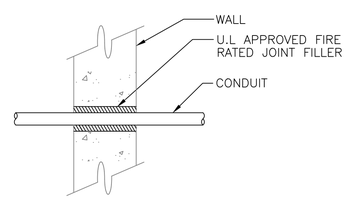

CONDUIT PENETRATION AT WALL
NOT TO SCALE

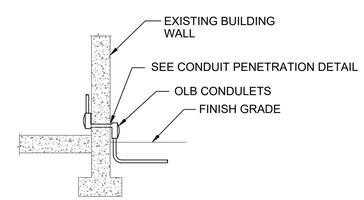

CONDUIT ENTRANCE
NOT TO SCALE

ENGINEER: Paul F. Hilers
REG. No: 41022
DATE: 02/02/24
TEL: (561) 451-9165
FAX: N/A

DRAWN BY: TN | DATE: 2/8/2024
DESIGNED BY: PFH | SCALE: AS NOTED
CHECKED BY: JD | FIELD BOOK:

CITY OF FORT LAUDERDALE
PUBLIC WORKS DEPARTMENT
ENGINEERING & ARCHITECTURE
100 North Andrews Avenue, Fort Lauderdale, Florida 33301

REVISIONS

NO.	DATE	BY	CHK'D	DESCRIPTION
1	8/25/2021	PFH		FTL BLDG DEPT COMMENTS

PROJECT # P12479
STORMSTATION 2
FIXED EMERGENCY GENERATOR
ELECTRICAL DETAILS

SHEET NO. E-05
TOTAL:
CAD FILE: E-05
DRAWING FILE NO. 4-144-23

E:\PROJECTS\CA\CA98\DRAWINGS\SS2\SS2 DRAWINGS\E-05.DWG

NOTE:
1. HEAT SHRINK TUBING SHALL COVER UNDERGROUND CONDUIT ADAPTER

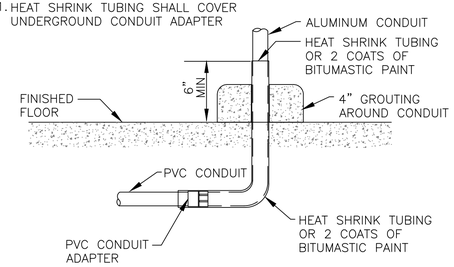

CONDUIT FLOOR ENTRANCE GROUT DETAIL

NOT TO SCALE

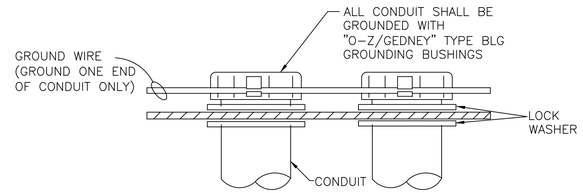

CONDUIT GROUNDING

NOT TO SCALE

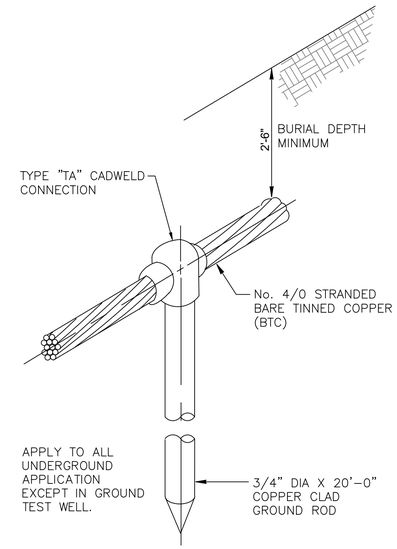

GROUND ROD DETAIL

NOT TO SCALE

NOTES:
1. ADJUST CONDUIT ENTRIES TO ATS AS REQUIRED.
2. NOT ALL CONDUITS ARE SHOWN. SEE RISER AND ONE LINE DIAGRAMS.
3. INCLUDE THE COST OF ADDITIONAL NEMA 4X STAINLESS STEEL JUNCTION BOX TO FACILITATE THE CONDUIT ENTRY AS REQUIRED IN THE BID PRICE.
4. ALL MOUNTING HARDWARE SHALL BE 316 STAINLESS STEEL.

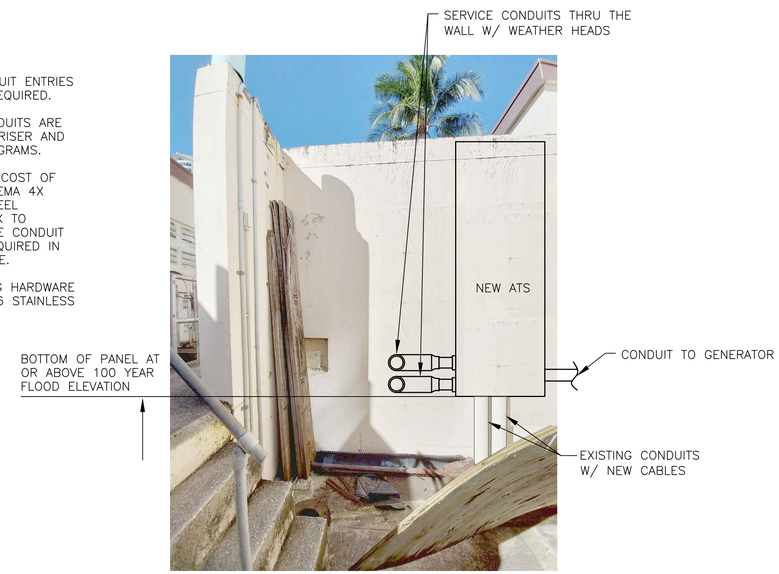

NEW ATS PANEL ON EXISTING CONCRETE WALL

NOT TO SCALE

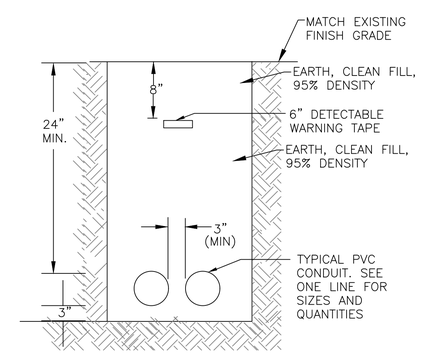

DIRECT BURIED CONDUIT DETAIL

NOT TO SCALE

ENGINEER: Paul F. Hilers
REG. No: 41022
DATE: 02/02/24
TEL: (561) 451-9165
FAX: N/A

DRAWN BY: TN | DATE: 2/8/2024
DESIGNED BY: PFH | SCALE: AS NOTED
CHECKED BY: JD | FIELD BOOK:

CITY OF FORT LAUDERDALE
PUBLIC WORKS DEPARTMENT
ENGINEERING & ARCHITECTURE
100 North Andrews Avenue, Fort Lauderdale, Florida 33301

REVISIONS

NO.	DATE	BY	CHK'D	DESCRIPTION
1	8/25/2021	PFH		FTL BLDG DEPT COMMENTS

PROJECT # P12479
STORMSTATION 2
FIXED EMERGENCY GENERATOR
ELECTRICAL DETAILS

SHEET NO. E-06
TOTAL:
CAD FILE: E-06
DRAWING FILE NO. 4-144-23

E:\PROJECTS\CA\CA98\DRAWINGS\SS2\SS2 DRAWINGS\E-06.DWG

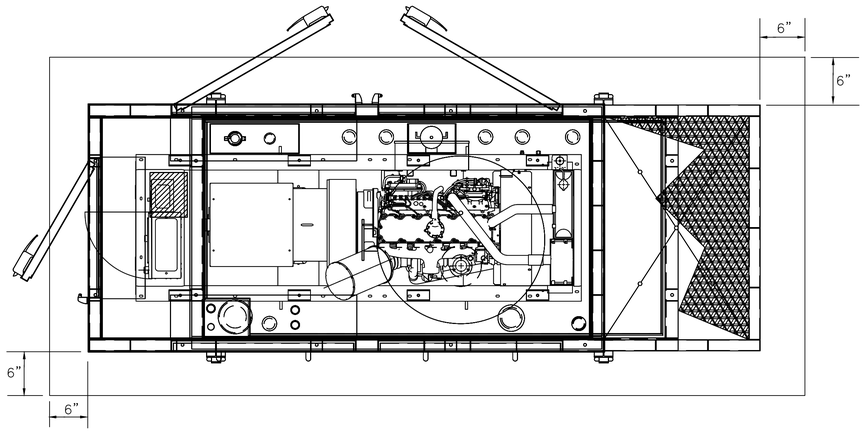

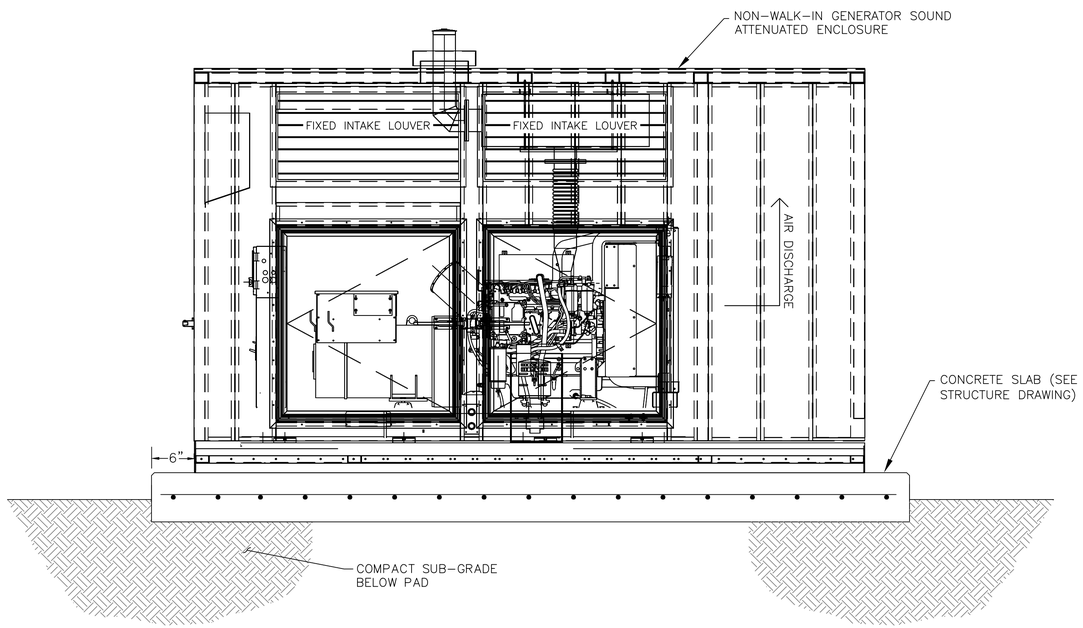

NATURAL GAS GENERATOR DETAIL

NOT TO SCALE

WIND LOADING NOTE:

1. GENERATOR INSTALLATION SHALL MEET FLORIDA BUILDING CODE WIND LOADING REQUIREMENT WITH APPROPRIATE WIND GUST FACTOR FOR THE LOCATION OF INSTALLATION. THE CONTRACTOR SHALL INCLUDE THE SHOP DRAWING SUBMITTAL, A WIND LOADING CALCULATION SIGNED AND SEALED BY A STRUCTURAL ENGINEER REGISTERED IN THE STATE OF FLORIDA SHOWING THAT THE PROPOSED INSTALLATION WILL MEET THE GIVEN WIND LOADING REQUIREMENT. CONTRACTOR SHALL ADJUST THE SIZE OF THE FOUNDATION AT NO ADDITIONAL COST TO MEET THE REQUIRED WINDLOADING.

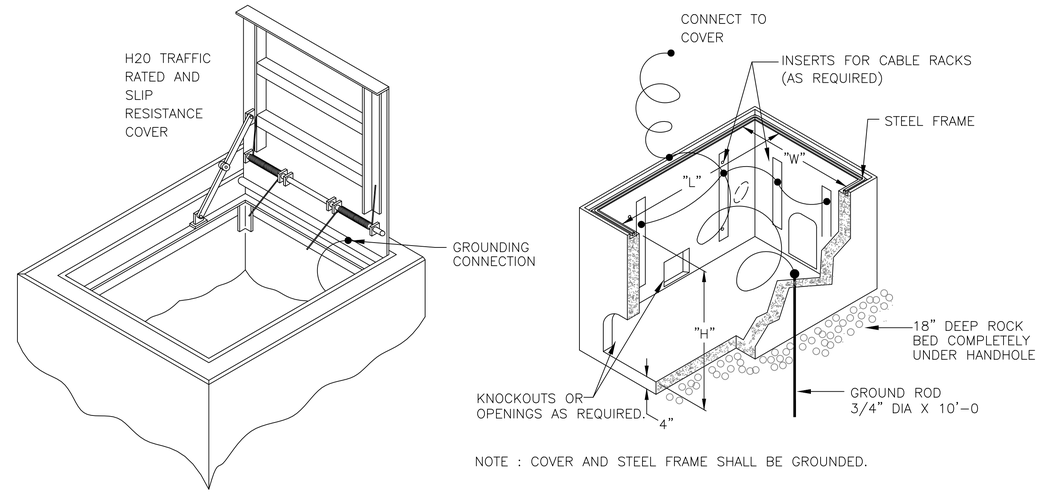

NOTE : COVER AND STEEL FRAME SHALL BE GROUNDED.

TRAFFIC RATED COVER WITH RECESSED PAD LOCK

NOT TO SCALE

MANHOLE DETAIL NOTES:

1. CABLE RACK, JOSLYN J-5126 OR EQUAL
   CABLE HOOKS, JOSLYN J-5131A OR EQUAL
   CABLE RACK INSULATORS, JOSLYN J-5120
2. PULLING-IN-IRONS INSTALL OPPOSITE CONDUIT ENTRANCE. POSITION BELOW LEVEL OF CONDUIT ENTRANCE. HUBBART & CO. CATALOG 9119 OR EQUAL.
3. TERMINATE ALL DUCTS IN MANHOLE WITH END BELLS.
4. MANHOLE COVERS SHALL BE MARKED "ELECTRICAL" BY THE MANUFACTURER, WITH RAISED LETTERS. THE CONTRACTOR SHALL STAMP IN THE MANHOLE COVERS THE IDENTIFICATION NUMBER OF THE MANHOLE. LETTERS AND NUMBERS TO BE 2" HIGH. AS AN ALTERNATE THE CONTRACTOR MAY INSTALL SS NAMEPLATES ATTACHED WITH FOUR SS BOLTS TO THE MANHOLE COVERS. INDICATING THE MANHOLE NUMBER. LETTERS AND NUMBERS TO BE RAISED AND 2" HIGH. SUBMIT ONE SAMPLE NAMEPLATE FOR ENGINEER'S APPROVAL PRIOR TO INSTALLATION.
5. GROUND ROD, 3/4"X10'-0, COPPER CLAD AND #8 GREEN AWG.
6. BOUND ALL METALLIC PARTS TO GROUNDING SYSTEM.
7. PRECAST CONCRETE MANHOLE WITH COVER, U.S. PRECAST CORP.
8. U.S.F. FABRICATION, INC. HEAVY DUTY, H-20 LOADING, SINGLE DOOR WITH RECESSED STAPLE FOR PADLOCK AND SPRING LOADED HINGE.

NOTES FOR ALL MANHOLES:

1. CONTRACTOR SHALL PROVIDE REQUIRED END BELL LOCATIONS TO MANHOLE MANUFACTURER BEFORE MANUFACTURING.
2. ALL MANHOLES SHALL BE H-20 TRAFFIC RATED.
3. THE HEIGHT OF CONDUIT ENTRANCES SHALL BE COORDINATED BY THE CONTRACTOR TO ACCOMMODATE OTHER UTILITIES IN THE AREA. SEE CIVIL ENGINEERING AND ELECTRICAL SITE PLANS FOR ELEVATIONS REQUIREMENTS.
4. CONTRACTOR SHALL COORDINATE CONDUIT ENTRY REQUIREMENTS WITH SITE PLAN, PRIOR TO ORDERING MANHOLES.
5. ALL COVERS SHALL BE RECESSED PADLOCK LOCKABLE. FOR MANHOLE INTERNAL DIMENSIONS LARGER THAN 48", PROVIDE TWO COVERS IN LIEU OF ONE LARGE COVER WITH DOOR SUPPORTS AND SPRINGS SIMILAR TO SINGLE COVER SHOWN IN DETAIL.
6. MANHOLE MINIMUM INTERNAL DIMENSION: 36"Wx36"Hx36"D

MANHOLE DETAIL

NOT TO SCALE

ENGINEER: Paul F. Hillers
REG. No: 41022
DATE: 02/02/24
TEL: (561) 451-9165
FAX: N/A

DRAWN BY: TN | DATE: 2/8/2024
DESIGNED BY: PFH | SCALE: AS NOTED
CHECKED BY: JD | FIELD BOOK:

CITY OF FORT LAUDERDALE
PUBLIC WORKS DEPARTMENT
ENGINEERING & ARCHITECTURE
100 North Andrews Avenue, Fort Lauderdale, Florida 33301

REVISIONS

NO.	DATE	BY	CHK'D	DESCRIPTION
1	8/25/2021	PFH		FTL BLDG DEPT COMMENTS

PROJECT # P12479
STORMSTATION 2
FIXED EMERGENCY GENERATOR
ELECTRICAL DETAILS

SHEET NO. E-07
TOTAL:
CAD FILE: E-07
DRAWING FILE NO. 4-144-23

E:\PROJECTS\CA\CA98\DRAWINGS\SS2\SS2 DRAWINGS\E-07.DWG

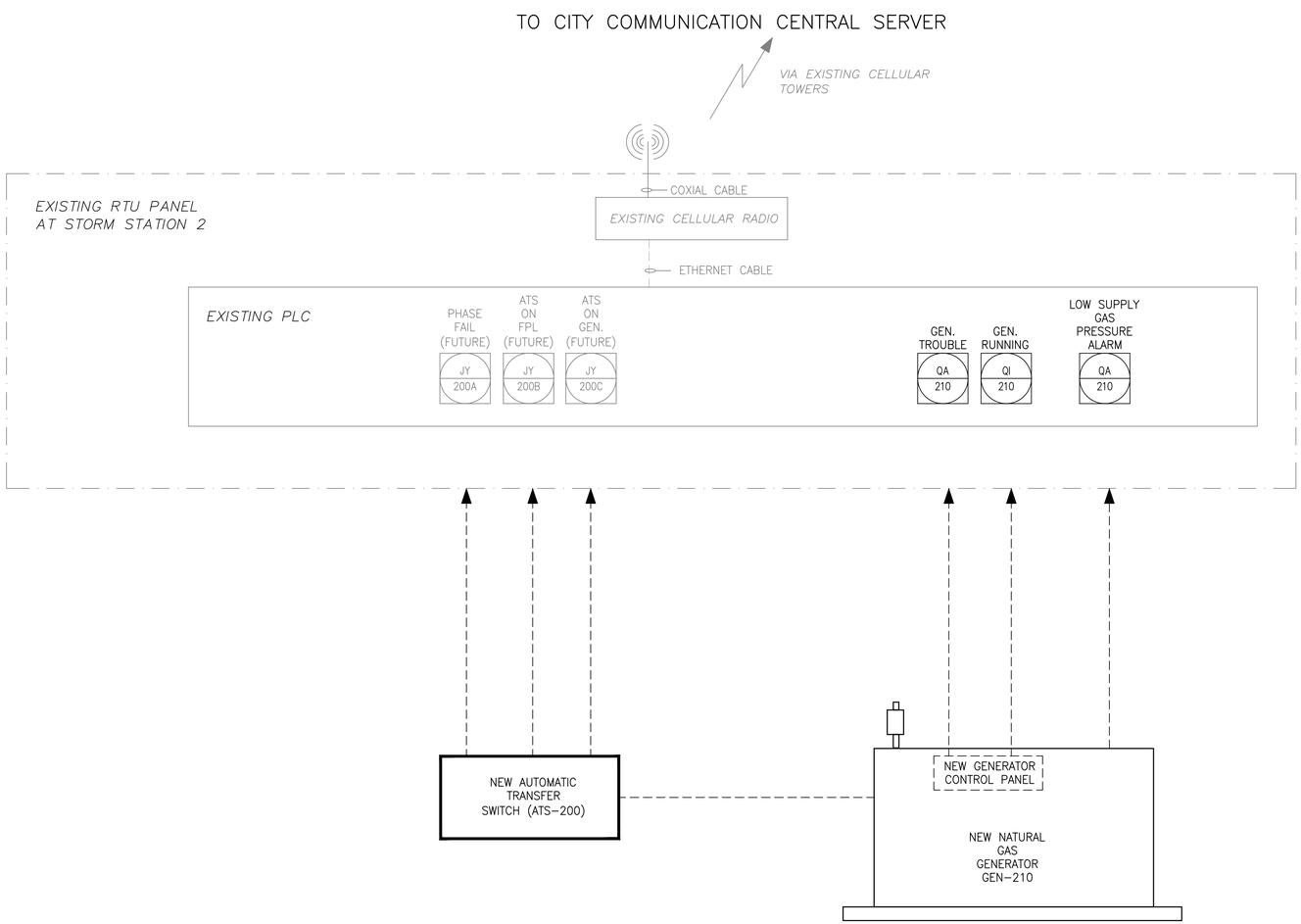

NOTES:

1. CONTRACTOR SHALL COORDINATE WITH THE CITY AND CONNECT AND TEST THE NEW I/O FROM THE GENERATOR ACCORDINGLY.
2. CONNECT GENERATOR TROUBLE, GENERATOR RUNNING AND LOW SUPPLY GAS PRESSURE ALARM TO THE ALLOCATED I/O POINTS IN THE EXISTING RTU PANEL. SIGNALS FROM ATS ARE FOR FUTURE USE.
3. PLC PROGRAMMING AND SCADA PROGRAMMING IS NOT REQUIRED AND IS NOT PART OF THIS CONTRACT.

EXISTING PARTIAL I/O LIST FROM RTU AS-BUILT

EXISTING DISCRETE INPUT EXPANSION CARD 1
IN 12: GENERATOR RUNNING
IN 13: GENERATOR TROUBLE

EXISTING DISCRETE INPUT AND OUTPUT EXPANSION CARD 2
IN 7: LOW SUPPLY GAS PRESSURE ALARM

ENGINEER: Paul F. Hillers
REG. No: 41022
DATE: 02/02/24
TEL: (561) 451-9165
FAX: N/A

DRAWN BY: TN
DATE: 2/8/2024
DESIGNED BY: PFH
SCALE: AS NOTED
CHECKED BY: JD
FIELD BOOK:

CITY OF FORT LAUDERDALE
PUBLIC WORKS DEPARTMENT
ENGINEERING & ARCHITECTURE
100 North Andrews Avenue, Fort Lauderdale, Florida 33301

REVISIONS

NO.	DATE	BY	CHK'D	DESCRIPTION
1	8/25/2021	PFH		FTL BLDG DEPT COMMENTS

PROJECT # P12479
STORMSTATION 2
FIXED EMERGENCY GENERATOR
GENERATOR P&ID

SHEET NO.
E-08
TOTAL:
CAD FILE: E-08
DRAWING FILE NO. 4-144-23

E:\PROJECTS\CA\CA98\DRAWINGS\SS2\SS2 DRAWINGS\E-08.DWG

City of Fort Lauderdale • Procurement Services Division
100 N. Andrews Avenue, 619 • Fort Lauderdale, Florida 33301
954-828-5933 Fax 954-828-5576
purchase@fortlauderdale.gov

ADDENDUM NO. 1

Event 283
Stormstation 1 and 2 Fixed Emergency Generators

ISSUED: May 30, 2024

This addendum is being issued to make the following change:

1. An additional non-mandatory Site Visit is being scheduled to allow prospective firms access to the electrical rooms associated with this project.

   The 2nd Site Visit will be held on **Thursday, June 6, 2024, 10:00am**, local time.

   Location: East end of Riverwalk N walkway and SE 1st Ave, just east of South Andrews Avenue, Fort Lauderdale, Florida

All other terms, conditions, and specifications remain unchanged.

Erick Martinez
Senior Procurement Specialist

Company Name: _____
(please print)

Bidder's Signature: _____

Date: _____

City of Fort Lauderdale • Procurement Services Division
100 N. Andrews Avenue, 619 • Fort Lauderdale, Florida 33301
954-828-5933 Fax 954-828-5576
purchase@fortlauderdale.gov

ADDENDUM NO. 2

Event 283
Stormstation 1 and 2 Fixed Emergency Generators

ISSUED: June 20, 2024

This addendum is being issued to post the following documents:

1. Geotechnical Report from Craven Thompson & Associates dated January 18, 2021.

2. Pre-Bid Meeting (May 30, 2024) Sign-In Sheet.

3. Pre-Bid Meeting (June 6, 2024) Sign-In Sheet.

All other terms, conditions, and specifications remain unchanged.

Erick Martinez
Senior Procurement Specialist

Company Name: _____
(please print)

Bidder's Signature: _____

Date: _____

REPORT OF SUBSURFACE EXPLORATION AND GEOTECHNICAL ENGINEERING EVALUATION

PREPARED FOR:

CRAVEN THOMPSON & ASSOCIATES
3563 NW 53 STREET
FORT LAUDERDALE, FLORIDA 33309
ATTN: GARY TENN, P.E.

PROJECT:

FORT LAUDERDALE STORM-STATION NO. 1
EMERGENCY GENERATOR PAD
JOB NO. 20-0072-001-01

LOCATION:

300 SW 1 AVENUE
FORT LAUDERDALE FLORIDA 33301

ACES PROJECT NUMBER: 2021-003

PREPARED BY:

Absolute
Civil
Engineering
Solutions LLC

4121 SW 47TH AVENUE, SUITE 1319
DAVIE, FLORIDA 33314

JANUARY 18, 2021

WAYNE ERRINGTON WEBB
LICENSE
No. 56701
STATE OF
FLORIDA
PROFESSIONAL ENGINEER

1/18/21

Wayne Webb, P.E.
Florida Lic. No. 56701

Table of Contents

EXPLORATION AND GEOTECHNICAL 1
1 INTRODUCTION: 1
2 PROJECT INFORMATION: 1
3 PROPOSED STRUCTURES: 1
4 SCOPE OF WORK: 1
5 LABORATORY TESTING: 3
6 GENERAL SUB-SURFACE CONDITIONS: 3
6.1 General sub-surface conditions encountered 3
6.2 Soil Classification 4
6.3 Groundwater 4
7 FOUNDATION RECOMMENDATIONS: 4
7.1 General foundation notes 4
7.2 Helical Piles 5
8 CLOSING REMARKS: 6

ATTACHMENT:

Attachment 1.0: Soil Boring Logs

Attachment 2.0: Site and Test Location Sketch

1 INTRODUCTION:

In response to the authorization of Mr. Gary Tenn, P.E. with Craven Thompson & Associates, **Absolute Civil Engineering Solutions, LLC (ACES)** is pleased to submit this Geotechnical Engineering Report for the Fort Lauderdale Storm-station No.1 Generator Pad with physical address 300 SW 1 Avenue, Fort Lauderdale, Florida 33301 (see Site and Test Location Sketch, Attachment 2.0).

2 PROJECT INFORMATION:

Our involvement in the project consisted of performing a preliminary subsurface investigation for the proposed Helical Piles to be installed at the location of the proposed generator pad with physical address 300 SW 1 Avenue, Fort Lauderdale, Florida 33301. The purpose of the investigation was to collect and analyze information regarding the subsurface conditions existing in the vicinity of the proposed improvements in order to evaluate site preparation and foundation construction alternatives. The investigation consisted of performing Standard Penetration Test (SPT) borings at one (1) location in the vicinity of the proposed generator pad location at the subject site.

3 PROPOSED STRUCTURES:

It is our understanding that the proposed improvement will consist of the construction of a new generator pad at the storm-station facility. The proposed improvement will involve the installation of generator pad/pile cap supported on helical piles. The number of helical piles shall be determined by the Structural Engineer of Record based on the design loads and the allowable pile load capacities outlined in this report.

4 SCOPE OF WORK:

ACES proposed to test the site's soils for foundation support and to assess the site's subsurface conditions as they pertain to the presence of organic materials, loose or otherwise unsuitable soils, and the groundwater characteristics.

We have determined that the standard penetration test (SPT) data collected is sufficient to evaluate soil strength and load carrying capability. All drilling, sampling and testing on this project were conducted in general accordance with ASTM procedures or other applicable standards and practices.

ACES conducted a total of one (1) standard penetration test (SPT) boring at or in close proximity to the subject generation pad. The test locations were measured in the field by taping and pacing from site features and landmarks. The SPT boring was drilled using a truck-mounted drill and rotary wash drilling procedures. The boring was advanced to a depth of about thirty (30) feet below the ground surface. Samples from the SPT boring were collected at selected depth intervals via the Standard Penetration Test method (ASTM D-1586). The "N-value" was recorded at each sample location for subsequent use in the engineering evaluation. The N-value provides an empirical indication of soil strength and is determined by the cumulative number of blows required by a 140-lb. hammer, operating freely over a 30-inch drop, to advance a 2-inch O.D. split-barrel sampler one foot into the soils, after initial penetration of 6-inches. The soil boring test results are provided in Attachment 1.0.

The groundwater depth was encountered and measured at each boring test location.

ACES evaluated the data obtained from the subsurface exploration and prepared this written report for the site summarizing the findings, along with our conclusions and recommendations. This report includes the following:

- A description of the site, fieldwork, laboratory testing and general soil conditions encountered, as well as a Test Location Sketch, and individual Boring Records;
- The field measured groundwater level;
- Foundation system recommendations for the proposed structure, including allowable foundation capacity;
- Recommended quality control measures (i.e. sampling, testing, and inspection requirements) for site grading and foundation construction; and
- Suitability of on-site soils for re-use as structural fill and backfill.

ACES did not observe any obvious odors or stains during the performance of our subsurface investigation. However, the assessment of site environmental conditions, the detection of pollutants in

the soil, rock or groundwater, or laboratory-testing of samples, wetlands evaluation, or a site-specific environmental study are beyond the scope of this exploration.

5 LABORATORY TESTING:

Our laboratory-testing program includes visual classification of the soil samples collected during the drilling process in accordance with the Unified Soil Classification System (USCS) and ASTM standards. Laboratory testing also includes limited classification tests (grain-size analyses, Atterberg limits and natural moisture content determination) of representative soils where deemed necessary.

6 GENERAL SUB-SURFACE CONDITIONS:

6.1 General sub-surface conditions encountered

The general subsurface conditions encountered in the vicinity of the subject structure can be represented by boring B-1 as follows:

DEPTH	MATERIAL DESCRIPTION
0’-0” to 0’-2”	Backfill; Brown Medium Sand with Rocks
0’-2” to 10’-6”	Back Medium Sand with silt and Some Wood and Rocks
10’6” to 14’-6”	Grey Medium Sand with Some Rocks
14’-6” to 30’-0”	Tan Cemented Lime Sand and Limestone

Test boring records should be consulted for a detailed description of the soil and rock conditions encountered at each boring location. When reviewing the boring records and the subsurface profiles, it should be understood that the soil conditions may vary between boring locations, therefore, special consideration should be given to the boring with the worst conditions encountered. The boring logs are provided in Attachment 1.0.

6.2 Soil Classification

The soil classification, densities, and angles of internal friction data generated from the soil conditions encountered are given in the table below:

Soil Properties						
Soil Type	Soil Description	USCS Classification	Soil Density (pcf)	Internal Angle of Friction	Average "N" Value for Layer	Skin Friction for Layer
1	Brown Medium sand with Rocks	SP	105-110	26°-28°	8	0.32
2	Black Medium Sand with Silt and Some Wood and Rocks	SP	100-105	24°-26°	5	0.20
3	Grey Medium Sand with Some Rocks	SP	110-115	26°-28°	24	0.96
4	Tan Cemented Lime Sand and Limestone	GP	125-130	30°-32°	85	3.40

6.3 Groundwater

The ground water level was encountered at each boring location at the time of drilling. The ground water level was encountered at an average depth of three (3) feet six (6) inches below the existing surface. Fluctuations in the observed ground water level should be expected due to seasonal climatic changes, de-watering activity, rainfall variation, surface water run-off and other specific factors related to the site in question.

7 FOUNDATION RECOMMENDATIONS:

7.1 General foundation notes

Based on the sub-surface conditions encountered, ACES evaluated a number of foundation systems for providing support for the proposed generator pad improvement. Special consideration in the analysis was given to the following:

- The presence of relatively loose layers of soil material of varied thickness, existing from the surface to as much as ten (10) feet six (6) inches below the existing surface;
- The close proximity of the proposed generator pad to other structures;

- The location of the proposed construction and the backfill material used to raise the site to grade;
- The proposed structure is relatively heavy so no tensile foundation loads are anticipated.
- Height to width ratio of the proposed structure with special emphasis on overturning moments and lateral support

Given the above, the following foundation system was selected for the proposed improvement:

7.2 Helical Piles

Helical (Helical Piers) piles are a feasible foundation solution to provide support for the proposed structures. The capacity of these piles is essentially developed in tip bearing and friction. When these piles are installed or socketed into place, they will "lock into" the rock and sand strata thereby providing adequate tensile and end bearing capacity.

The relationship obtained for this foundation system is as follows:

Size (Dia.)	Below Grade Length (Ft.)	Allowable Tensile Capacity	Allowable Compressive Bearing Capacity	Remarks
3"	22	10 kips	20 kips	No Pile load Test Required
4"	22	15 kips	24 kips	No Pile Load Test Required

*** Given the soil conditions encountered, ACES utilized a minimum Factor of Safety of 2.5 when calculating allowable loads.**

The entire pile driving (installation) operation should be monitored and performed in accordance with the relevant local and state requirements. The proposed pile length is calculated based on the existing surface at the time of drilling.

8 CLOSING REMARKS:

Regardless of the thoroughness of our geotechnical exploration there is always a possibility that the general conditions beneath the subject property (site) may be different from those at the test locations. Therefore, ACES is not responsible for any sub-soil conditions different from those reported in our boring logs.

This report was prepared exclusively for the use of Craven Thompson & Associates. The conclusions provided by ACES are based solely on the information presented in this report. As a mutual protection to clients, the public and ourselves, all reports are submitted as the confidential property of clients, and authorization for publication of statements, conclusions or extracts from or regarding our reports is reserved pending our written approval.

We appreciate the opportunity to have been of service to your company. Please feel free to contact us if there are any questions or comments pertaining to this report.

Respectfully submitted,

Absolute Civil Engineering Solutions, LLC

WAYNE ERRINGTON WEBB
LICENSE
No. 56701
STATE OF FLORIDA
PROFESSIONAL ENGINEER

1/18/21

Wayne Webb, P.E.
Project Engineer
P.E. # 56701

Attachment 1.0: Boring Logs

Absolute Civil Engineering Solutions, LLC

ENGINEERING TESTING-ENGINEERING INSPECTION SERVICES-GEOTECHNICAL-ENVIRONMENTAL

4121 SW 47th Ave, Suite 1319, Davie, FL, 33314 / Phone: 954-349-8797 / Fax: 866-283-9007

SPT SOIL BORING REPORT

CLIENT:	Craven Thompson	**Page:**	1 of 1
CLIENT ADDRESS:	3563 NW 53rd Street , Fort Lauderdale, FL, 33309	**Report #:**	1
PROJECT:	Pump Station #1	**Boring #:**	B-1
PROJECT ADDRESS:	300 SW 1 st Ave., Fort Lauderdale, FL 33301	**Date:**	1/8/21
BORING LOCATION:	As Shown On Site Boring Location Map	**Driller:**	AG

DEPTH (FEET)	DESCRIPTION OF MATERIALS
1	0'-0" to 0'-2" Backfill Brown Medium Sand with Rocks
2	0'-2" to 10'-6" Black Medium Sand with Silt and Some Wood and Rocks
3	
4	
5	
6	
7	
8	
9	
10	
11	
12	10'-6" to 14'-6" Gray Medium Sand with Some Rock
13	
14	
15	
16	14'-6" to 30'-0" Tan Cemented Lime Sand and Lime Stone
17	
18	
19	
20	
21	
22	
23	
24	
25	
26	
27	
28	
29	
30	

Sample No.	Hammer blows on sampler		"N" Value
0'-2'	4 / 3	4 / 4	7
2'-4'	4 / 2	3 / 2	5
4'-6'	3 / 2	3 / 2	5
6'-8'	2 / 1	1 / 1	2
8'-10'	2 / 4	3 / 4	7
10'-12'	6 / 11	7 / 13	18
12'-14'	15 / 14	16 / 17	30
14'-16'	19 / 28	22 / 31	50
16'-18'	26 / 30	29 / 22	59
18'-20'	36 / 36	34 / 31	70
20'-22'	30 / 43	29 / 41	72
22'-24'	40 / 41	43 / 45	84
24'-26'	45 / 61	53 / 63	114
26'-28'	63 / 59	48 / 61	107
28'-30'	63 / 66	60 / 63	126

End of Boring at 30 ft

WATER TABLE: 3'-6" below surface as of: 1/8/2021

WAYNE ERRINGTON WEBB LICENSE No. 56701 STATE OF FLORIDA PROFESSIONAL ENGINEER

Respectfully Submitted:

1/18/21

Wayne Webb, P.E. Lic. #56701

Absolute Civil Engineering Solutions, LLC

As a mutual protection to clients, the public and ourselves, all reports are submitted as the confidential property of clients, and authorization for publication of statements, conclusions or extracts from or regarding our reports is reserved pending our written approval.

Attachment 2.0: Site and Test location Sketch

STORMWATER STATION No. 1

300 SW 1st Ave.,

Fort Lauderdale, FL 33301

Site Location Map

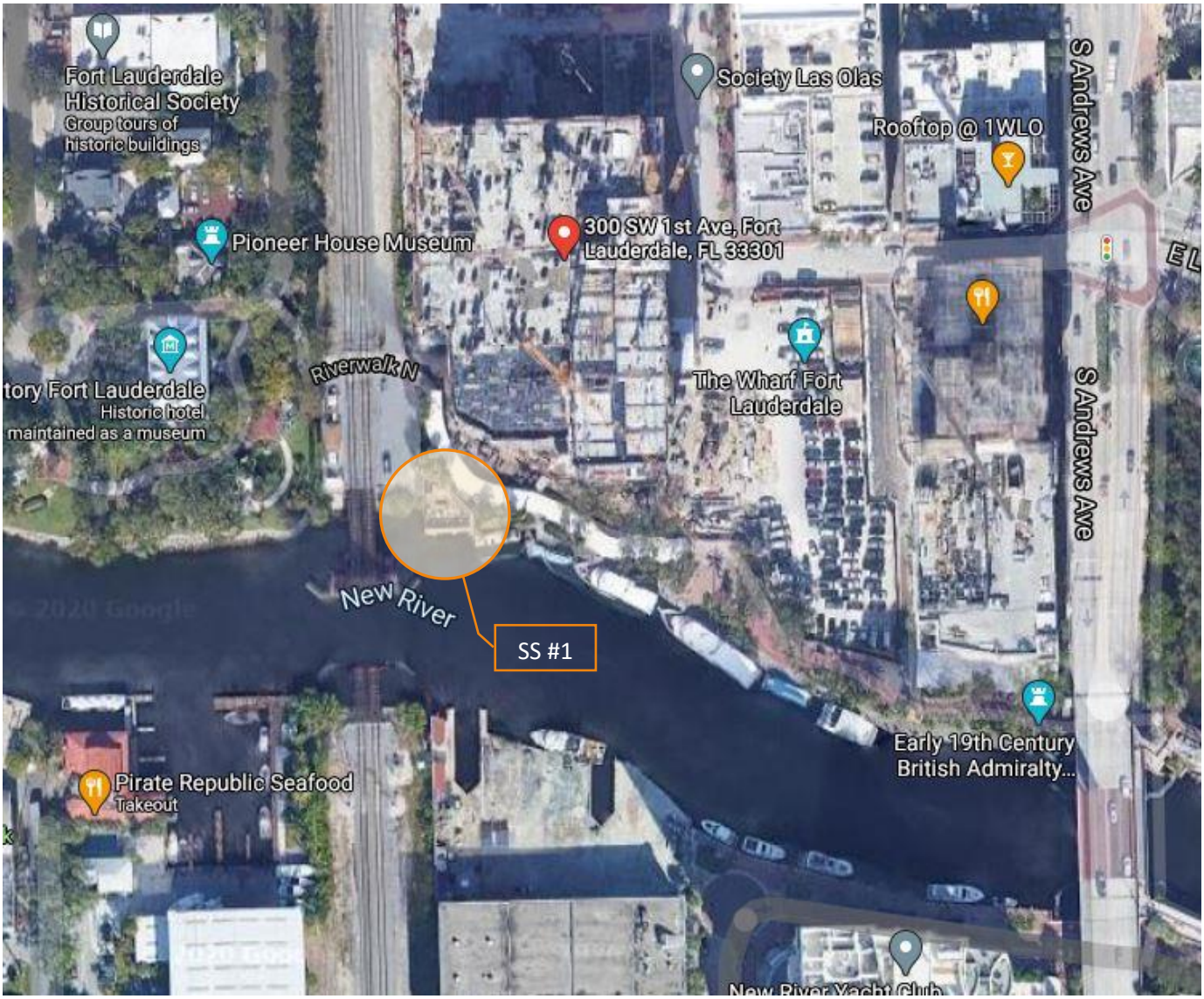

1 Boring location at 30 ft.

FINANCE DEPARTMENT
PRE-BID MEETING SIGN-IN SHEET

WE BUILD COMMUNITY

DATE: 05/30/2024 **TIME:** 10:00 ◉ AM ○ PM

OPENING DATE: 06/24/2024 **PROCUREMENT CONTACT:** Erick Martinez

ITB #: Event 283 **ITB TITLE:** Storm Station 1 & 2 Fixed Emergency Generators

NAME	COMPANY	PHONE	EMAIL
Erick Martinez	City of Fort Lauderdale Procurement Division	(954) 828-4019	emartinez@fortlauderdale.gov
Bob Birdsong	Mills Elect	(954) 640-6252	bobe millsolec.com
RAUL CABRERA	DMSI	954-770-4406	Bids@dmsi.co
Tom Tietje	Zabatt	786-390-7855	Tom.Tietje@zabatt.com
Abraham Torres	Zabatt	786-968-9073	Abraham.Torres@zabatt.com
SAID HUSSAIN	CFL	954-828-5678	SHUSSAIN@fortlauderdale.gov
STEVE RUMMER	CFL	(954) 828-5051	STEVERL@FORTLAUDERDALE.GOV

FINANCE DEPARTMENT
PRE-BID MEETING SIGN-IN SHEET

WE BUILD COMMUNITY

DATE: 06/06/2024 TIME: 10:00 ⦿ AM ○ PM

OPENING DATE: 06/24/2024 PROCUREMENT CONTACT: Erick Martinez

ITB #: Event 283 ITB TITLE: Storm Station 1 & 2 Fixed Emergency Generators

NAME	COMPANY	PHONE	EMAIL
Erick Martinez	City of Fort Lauderdale Procurement Division	(954) 828-4019	emartinez@fortlauderdale.gov
SAYD HUSSAIN	CFL	954-828-5678	SAYDH@fortlauderdale.gov
Scarlet Del Valle	CFL	954-828-5580	sdelvalle@fortlauderdale.gov
Ian Stearns	Miller Electric Co.	904-763-1726	istearns@mecojax.com
Elizabeth Van Zandt	DDA	954-463-6574	elizabeth@ddaftl.org
Abraham Torres	Zabatt	305-868-9073	Abraham.Torres@zabatt.com
Tom Tietje	Zabatt	786-390-7855	Tom.Tietje@zabatt.com
THEIN MAING	Hillers Electric	5614519165	TMAING@Hillerselec.com
Gary Tenn	CTA	954 7396408	gtenn@craventhompson.com