CHANGE ORDER – COMMISSION

Rev: 1 | Revision **Date:** 6/24/2024 | **Print Date:** 6/24/2024 **I.D. Number:** CONOM

To:	Glenn Marcos, CPPO, CPPB, FCPM, FCPA, Chief Procurement Officer
From:	David Lovern, Project Manager
Date:	July 2, 2024
Re:	Change Order No. 16 for Project #12573

Job Description:	Project P12573, Project Fort Lauderdale Police Headquarters
Contractor:	Moss & Associates, LLC
Amount:	Total amount of Change Order # $1,634,999.49, plus 0 additional days
Funding:	P12573

The purpose of this Change Order is:

The City is requesting a Change Order to increase material line items and add time that was not included in the original scope of work.

Due to unforeseen challenges on the project, Moss has been tasked with assuming scope of work that was not incorporated in the GMP. Critical items were directed to be mobilized, utilizing the city contingency. The scope of work that is required to be replenished is:

- Additional Permit Costs as of February 29, 2024
- Furnish and Installation of Fume Hoods
- Furnish and Installation of Kitchen Equipment
- Furnish and Installation of Walk-in Freezer / Coolers
- Change in scope for additional Structured Cabling (Cameras)
- Change in scope to include Parking Garage Traffic Coating
- Addition in scope for surveying Roof Deck deflection per City of Fort Lauderdale Building Official
- Furnish and Installation of Shoring of the North Roof Deck.

CHANGE ORDER – COMMISSION

NEW AND EXISTING CONTRACT ITEMS ARE UTILIZED – TOTAL ADDITION ($1,634,999.49)

Item No. New	**Permit Costs as of February 29, 2024**
	ADD NEW $ 164,943.99
Item No. New	**Fume Hoods Equipment**
	ADD NEW $ 57,701
Item No. New	**Kitchen Equipment**
	ADD NEW $ 441,513
Item No. New	**Walk-in Freezer / Cooler Combo at Evidence Storage**
	ADD NEW $144,607
Item No. New	**Freezer Unit at Garage**
	ADD NEW $ 65,698
Item No. New	**Parking Garage Traffic Coating**
	ADD NEW $398,062.00
Item No. New	**Roof Deck Deflection**
	ADD NEW $362,475

NET AMOUNT OF THIS CHANGE ORDER **$1,634,999.49**

ADDITIONAL CONTRACT TIME BEING REQUESTED– (0) CALENDAR DAYS

THE TOTAL AMOUNT OF THIS CHANGE ORDER **$1,634,999.49**

This Change Order provides for all costs and schedule adjustments associated with completing the work, including materials, labor, equipment, bond, insurance, overhead, profit, impacts, and any and all related items or associated costs incurred or resulting from the items listed above, and is provided in accordance with Article 13 – Changes in the Work of the Contract.

IN WITNESS OF THE FOREGOING, the parties have set their hands and seals the day and year first written below.

(Vendor)

Approved: _____

Dvon Nottage Project Executive

Print Name and Title

CITY OF FORT LAUDERDALE,
a municipal corporation of the State of Florida.

_____

Glenn Marcos, CPPO, CPPB, FCPM, FCPA
Chief Procurement Officer

Date: _____

*Pursuant to Section 2-179 Code of Ordinances of the City of Fort Lauderdale, Florida

C: Anthony Fajardo, Assistant City Manager
Kristin Thompson, Division Manager
Financial Administrator
Project File

CHANGE ORDER SUMMARY SHEET

ORIGINAL CONTRACT AMOUNT		$118,998,391
COST OF CHANGE ORDERS TO DATE		($19,936,478.84)
COST OF THIS CHANGE ORDER		1,634,999.49
	TOTAL:	**$100,696,911.60**
ORIGINAL CONTRACT TIME		959 calendar days

[redacted]

WE BUILD COMMUNITY

CHANGE ORDER – COMMISSION

Rev: 1 | Revision **Date:** 6/24/2024 | **Print Date:** 6/24/2024 **I.D. Number:** CONOM

TIME ADDED TO DATE	0	calendar days
TIME ADDED TO THIS CHANGE ORDER	0	calendar days
TOTAL:	959	calendar days

SCHEDULE OF CHANGE ORDERS TO DATE

Item #	DATE	DESCRIPTION	AMOUNT OF COST OR CREDIT
1	8/16/2023	DPO 001 Switchgear Material	($1,759,650.94)
2	8/28/2023	DPO 002 Generator, SG, ATS	($2,722,974.82)
3	10/12/2023	DPO 003 Rebar, CIP Concrete, PG Precast, Arch. Precast	($9,247,237.84)
4	10/12/2023	DPO 004 Roofing, Fire Sprinklers, Plumbing, and HVAC	($2,525,497.33)
5	11/14/2023	OCO 001 Allowance Reconciliation	($0.00)
6	11/14/2023	OCO 002 Budget Reconciliation	($0.00)
7	11/14/2023	OCO 003 City Contingency	($0.00)
8	11/18/2023	OCO 004 Vibro-compaction Credit	($0.00)
9	1/24/2024	OCO 005 Conformed Permit Set	($0.00)
10	1/30/2024	OCO 006 Jobsite Cleaning	($0.00)
11	2/20/2024	DPO 006 Stucco, Ceilings, Carpet, LVT, Painting, HVAC, and Electrical	($3,866,451.92) Not including City Contingency
12	3/27/2024	OCO 007 CIP Fiber Reinforcement 2nd Floor	($0.00)
13	4/5/2024	OCO 008 Misc. Construction Contingency	($0.00)

14	5/02/2024	DPO 007 Structured Cabling only, Carpet LVT and VCT	($573,940.23) Not including City Contingency
15	06/11/2024	OCO 009 BDA-DAS and Temp. Shelter	($0.00)

REV.07.COM

CITY

CITY OF FORT LAUDERDALE, a municipal corporation of the State of Florida.

By: _____
SUSAN GRANT
Acting City Manager

Date: _____

ATTEST:

By: _____
DAVID R. SOLOMAN
City Clerk

Date: _____

(CORPORATE SEAL)

Approved as to form and correctness:
Thomas J. Ansbro, City Attorney

By: _____
RHONDA MONTOYA HASAN
Senior Assistant City Attorney

Date: _____

Moss & Associates, LLC
2101 N Andrews Avenue
Ft Lauderdale, FL 33311

May 20, 2024

David Lovern
City of Fort Lauderdale
100 N Andrews Ave
Ft. Lauderdale, FL 33301

RE: Potential Change Item (PCI) 0092 Notification
Fort Lauderdale Police Headquarters - B372302

Dear David Lovern,

This letter is to provide official notification of a potential change item (PCI) as follows:

PCI Number: 0092
Date: May 20, 2024
Description: RFI 417 - Additional Traffic Coating at Level 3 Parking Garage
Days Requested:
Reason: Owner Directive - External
Scope Description: Cost to provide traffic coating at the balance of Level 3 Parking Garage as requested via RFI 417. Priced as SOPREMA ALSAN TRAFIK PU 211/411/411/411 (Three coat system). Does not include water mitigation primer, re-coat prior to turnover, or any other additional scope not included in the RFI.

This PCI is comprised of the following items:

RFI 417 - Additional Traffic Coating at Level 3 Parking Garage	$ 360,633.00
01 Construction Contingency 2%	$ 7,213.00
02 Subcontract Default Insurance 1.25%	$ 4,598.00
03 Moss Insurance 1.75%	$ 6,518.00
04 Bond 1%	$ 3,790.00
05 Fee 4%	$ 15,310.00
Grand Total	$398,062.00

Per the terms and conditions of our contract, we have attached the appropriate back up documentation to substantiate the above referenced costs. This request only includes the items specifically identified in this change proposal. All other costs associated with this project shall be submitted under a separate change order cover.

We respectfully reserve our rights to request additional time should it become evident that this work will impact the overall completion of the project. The costs associated with this PCI will remain valid for fourteen (14) calendar days after submission.

Please indicate your formal approval for this additional work and cost by signing in the space provided below. Moss & Associates will then incorporate this change into the next Owner Change Order (OCO).

If you should have any questions, please contact the undersigned at 954-326-2727 as soon as possible.

Sincerely, **Moss & Associates, LLC** _____ Date: _____ Matthew Kane Project Manager	Reviewed / Approved by: **City of Fort Lauderdale** **Approved: _____ Date:_____** **(Owner)**

PEGASUS
PAINTING & WATERPROOFING

5601 POWERLINE ROAD
SUITE 102-103
FORT LAUDERDALE, FL 33309

O: 954.55.4616
F: 954.944.1930
www.pegasusfl.us

SUBMITTED TO:
Moss & Associates
2101 N Andrews Ave., Suite 300
Fort Lauderdale, FL 33311

PHONE: 561-214-2521
EMAIL: Mkane@mosscm.com

DATE: May 20, 2024
ATTN: Matthew Kane
RE: Fort Lauderdale Police Headquarter and PG

Per plans, scope sheets and specifications, Pegasus Painting & Waterproofing proposes the following scope of work and pricing for the above referenced project:

Addenda received: AS PER GC REQUEST
Selections bidding: 070000 WATERPROOFING
Pegasus Painting & Waterproofing wil provide all materials, lifts, and supplies for the scope of work.

CHANGE ORDER REQUEST #12 UPDATED - VEHICULAR TRAFFIC COATING AT 3RD LEVEL REMAMINING DECK		
MATERIAL	LOCATION	
REMAINING DECK		
SANDED VEHICULAR TRAFFIC COATING (10-Yrs warranty)		
SOPREMA ALSAN TRAFIK PU 211/411/411/411 (53,600 SQFT)	REMAINING DECK AT 3RD FLOOR OF PARKING GARAGE	$ 360,633.00

MATERIAL BREAKDOWN	$ 189,128.18
LABOR BREAKDOWN (2890 HRS @ $48/HR)	$ 138,720.00
BURDEN (10%)	$ 32,784.82
TOTAL	$ 360,633.00

CHANGE ORDER REQUEST #12 UPDATED - VEHICULAR TRAFFIC COATING AT 3RD LEVEL REMAMINING DECK	$ 360,633.00

EXCLUSIONS & QUALIFICATIONS:

1. For P&P Bond, add 1.8%.
2. Grinding, prep or touch-up of welds, not included.
3. Painting and touch-up of mechanical equipment and ductwork, not included.
4. Bondo prep of metal surfaces, not included.
5. Signage and graphics, not included.
6. Painting and color coding of pipes, not included.
7. Prep work necessary to bring walls to an acceptable condition for painting, by others.
8. Parking lot, vehicular, and pedestrian markings, not included.
9. Painting and caulking at sidewalks, curbs and ramps, not included.
10. Finishing of millwork, casework, cabinetry, shelving, and any attached trim is not included.
11. Sealing of Penetrations is excluded.

Please let me know if you have any questions. Thank you for this opportunity.

Jesus Gonzalez
Project Manager/Estimator
PEGASUS
Pegasus Painting and Waterproofing, LLC.
O: *954.755.4616*
F: *954.944.1930*
C: 954-218-1127
Jesusg@pegasusfl.us
www.pegasusfl.us

Moss & Associates LLC
2101 N. Andrews Avenue
Fort Lauderdale, Florida 33311
P: (954) 524-5678

Project: B372302 Fort Lauderdale Police Headquarters
1300 W Broward Blvd
Fort Lauderdale, Florida 33312

RFI #417: PG Traffic Coating

Status	Open		
To	Yanique Virgo (AECOM) *(Response Required)* Evan Siegel (AECOM) *(Response Required)*	**From**	Vanessa Navarrete (Moss & Associates LLC - FLL)
Date Initiated	Mar 6, 2024	**Due Date**	Mar 13, 2024
Location		**Project Stage**	
Cost Impact		**Schedule Impact**	
Spec Section		**Cost Code**	
Drawing Number		**Reference**	
Linked Drawings			
Received From	Vanessa Navarrete (Moss & Associates LLC - FLL)	**Sub Job**	
Copies To	Surabhi Chawda (Moss & Associates LLC - FLL), Jennifer Escobar (Moss & Associates LLC - FLL), Aman Gusain (Moss & Associates LLC - FLL), Matthew Kane (Moss & Associates LLC - FLL), Angel Lopez (Moss & Associates LLC - FLL), David Lovern (City of Fort Lauderdale), Vanessa Navarrete (Moss & Associates LLC - FLL), Michael Perez-Gurri (Moss & Associates LLC - FLL)		
Subcontractor RFI #		**Priority**	Medium

Activity

Question

Question from Vanessa Navarrete Moss & Associates LLC - FLL *on Wednesday, Mar 6, 2024 at 11:40 AM EST*

Please take note of the information provided in the attached Drawing PG-A2-2-03. The drawing does not specify a detail of whether traffic coating waterproofing should be applied in the areas where the elevator and electrical room are located, and where these are enclosed by precast panels. Kindly review and advise if traffic coating waterproofing is required in these areas due to the enclosed area.

Attachments
PG-A2-2-03_ PARKING GARAGE TRAFFIC COATING.pdf

Awaiting an Official Response

Per the current design, this area (clouded in RFI) does not require traffic coating.

However, during our most recent site visit and discussion with the client, please provide an estimate for applying traffic coating to the entire 3th level of the parking garage per the base bid (3 coats) in the specification & the alternate bid (2 coats). The area shaded in gray (see page 2) shall remain per the base bid.

AECOM 4/1/24

EXHIBIT A

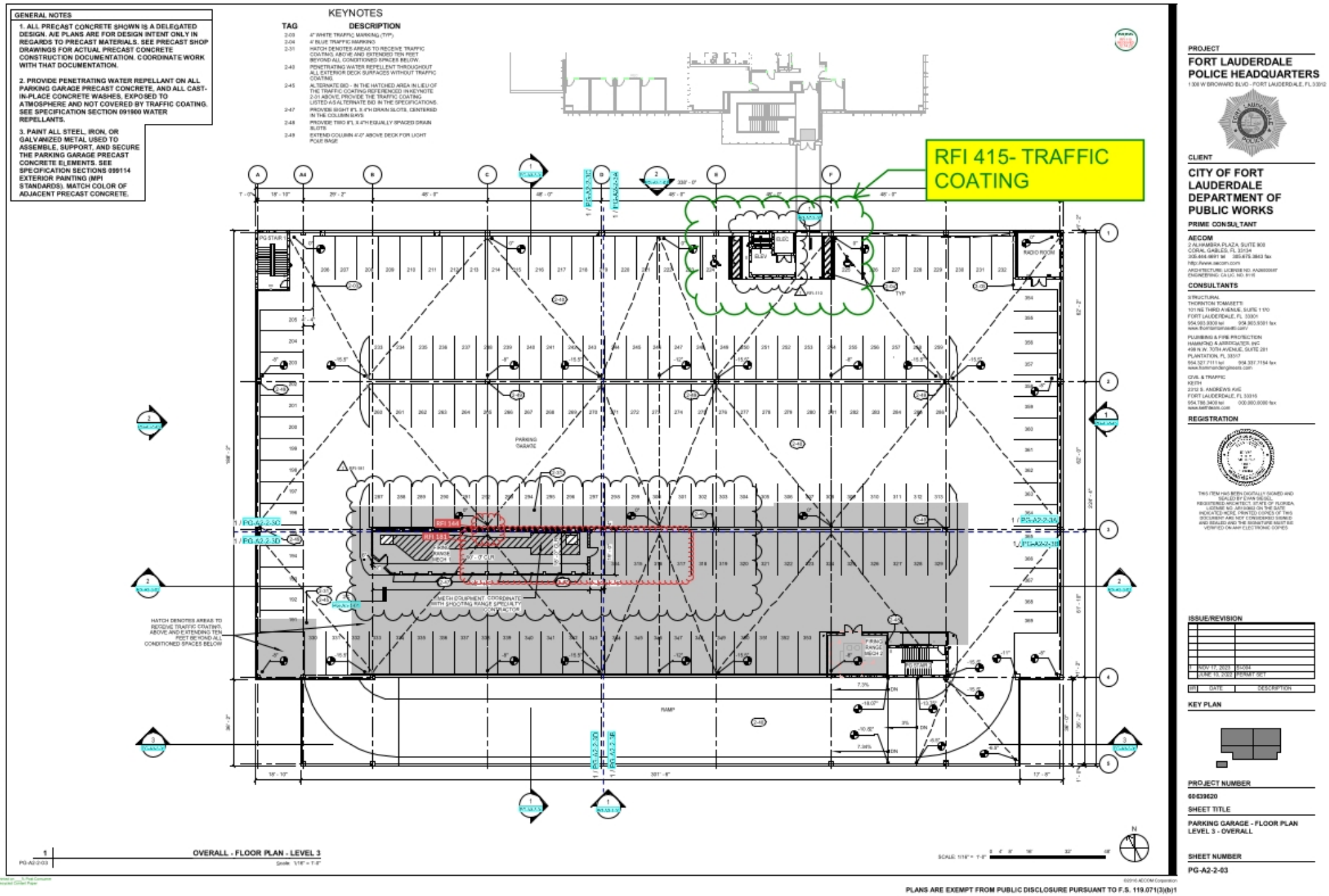
GENERAL NOTES
1. ALL PRECAST CONCRETE SHOWN IS A DELEGATED DESIGN. AIE PLANS ARE FOR DESIGN INTENT ONLY IN REGARDS TO PRECAST MATERIALS. SEE PRECAST SHOP DRAWINGS FOR ACTUAL PRECAST CONCRETE CONSTRUCTION DOCUMENTATION. COORDINATE WORK WITH THAT DOCUMENTATION.
2. PROVIDE PENETRATING WATER REPELLANT ON ALL PARKING GARAGE PRECAST CONCRETE, AND ALL CAST-IN-PLACE CONCRETE WASHES, EXPOSED TO ATMOSPHERE AND NOT COVERED BY TRAFFIC COATING. SEE SPECIFICATION SECTION 091900 WATER REPELLANTS.
3. PAINT ALL STEEL, IRON, OR GALVANIZED METAL USED TO ASSEMBLE, SUPPORT, AND SECURE THE PARKING GARAGE PRECAST CONCRETE ELEMENTS. SEE SPECIFICATION SECTIONS 099114 EXTERIOR PAINTING (MPI STANDARDS). MATCH COLOR OF ADJACENT PRECAST CONCRETE.
KEYNOTES
TAG DESCRIPTION
2-03 4" WHITE TRAFFIC MARKING (TYP)
2-04 4" BLUE TRAFFIC MARKING
2-31 HATCH DENOTES AREAS TO RECEIVE TRAFFIC COATING ABOVE AND EXTENDED TEN FEET BEYOND ALL CONDITIONED SPACES BELOW.
2-40 PENETRATING WATER REPELLENT THROUGHOUT ALL EXTERIOR DECK SURFACES WITHOUT TRAFFIC COATING.
2-45 ALTERNATE BID - IN THE HATCHED AREA IN LIEU OF THE TRAFFIC COATING REFERENCED IN KEYNOTE 2-31 ABOVE, PROVIDE THE TRAFFIC COATING LISTED AS ALTERNATE BID IN THE SPECIFICATIONS.
2-47 PROVIDE EIGHT 8"L X 4"H DRAIN SLOTS, CENTERED IN THE COLUMN BAYS
2-48 PROVIDE TWO 8"L X 4"H EQUALLY SPACED DRAIN SLOTS
2-49 EXTEND COLUMN 4'-0" ABOVE DECK FOR LIGHT POLE BASE
RFI 415- TRAFFIC COATING
PARKING GARAGE
RAMP
HATCH DENOTES AREAS TO RECEIVE TRAFFIC COATING, ABOVE AND EXTENDING TEN FEET BEYOND ALL CONDITIONED SPACES BELOW
METH EQUIPMENT COORDINATE WITH SHOOTING RANGE SPECIALTY CONTRACTOR
OVERALL - FLOOR PLAN - LEVEL 3
PROJECT
FORT LAUDERDALE POLICE HEADQUARTERS
CLIENT
CITY OF FORT LAUDERDALE DEPARTMENT OF PUBLIC WORKS
PRIME CONSULTANT
AECOM
CONSULTANTS
REGISTRATION
ISSUE/REVISION
KEY PLAN
PROJECT NUMBER
60639620
SHEET TITLE
PARKING GARAGE - FLOOR PLAN LEVEL 3 - OVERALL
SHEET NUMBER
PG-A2-2-03
PLANS ARE EXEMPT FROM PUBLIC DISCLOSURE PURSUANT TO F.S. 119.071(3)(b)1

Moss & Associates, LLC
2101 N Andrews Avenue
Ft Lauderdale, FL 33311

May 13, 2024

David Lovern
City of Fort Lauderdale
100 N Andrews Ave
Ft. Lauderdale, FL 33301

RE: Potential Change Item (PCI) 0086 Notification
Fort Lauderdale Police Headquarters - B372302

Dear David Lovern,

This letter is to provide official notification of a potential change item (PCI) as follows:

PCI Number: #0086
Date: May 07, 2024
Description: Re: RFI # 435 FLPH - HQ North Roof Deck Cracking
Days Requested:
Reason: Owner Directive - External
Scope Description: Subcontract Changes due to 3/4"-1/2" inch deflection on the slab (between grid lines 2 and 3 and between H and K).

This PCI is comprised of the following items:

Additional CIP Cost in accordance with RFI #435 Response for the North Beam Deflection (Columns H2, J2 and Footings H2 and J2)	$ 33,425.00
Additional Waterproofing and Caulking at Window Openings affected via RFI Response #435	$ 574.00
Added Surveying cost required per Owner to monitor Slab/Beam Deflections as applicable	$ 15,450.00
Costs to Scan Existing slab conditions associated with RFI #435 as requested by Owner and 3rd Party Structural Reviewer	$ 5,800.00
HVAC Costs resulting from corrective work as outlined in RFI Response #435	$ 10,488.00
Arch. Precast corrective work as a result of RFI Response #435	$ 15,360.50
01 Construction Contingency 2%	$ 1,622.00
02 Subcontract Default Insurance 1.25%	$ 1,034.00
03 Moss Insurance 1.75%	$ 1,466.00
04 Bond 1%	$ 852.00
05 Fee 4%	$ 3,443.00
Grand Total	$89,514.50

Note, the costs presented in this PCI cover letter includes **"only"** the costs incurred to date. As we work through the requirements and ultimately final assessment of the City's 3rd party structural reviewer, any/all additional costs and/or additional time impacts that arise will be tracked and submitted under a separate PCI cover letter for processing.

Per the terms and conditions of our contract, we have attached the appropriate back up documentation to substantiate the above referenced costs. This request only includes the items specifically identified in this change proposal. All other costs associated with this project shall be submitted under a separate change order cover.

We respectfully reserve our rights to request additional time should it become evident that this work will impact the overall completion of the project. The costs associated with this PCI will remain valid for fourteen (14) calendar days after submission.

Please indicate your formal approval for this additional work and cost by signing in the space provided below. Moss & Associates will then incorporate this change into the next Owner Change Order (OCO).

If you should have any questions, please contact the undersigned at 954-605-5491 as soon as possible.

Sincerely, **Moss & Associates, LLC** _____ Date: _____ Dvon Nottage Project Executive	Reviewed / Approved by: **City of Fort Lauderdale** **Approved: _____ Date:_____** **(Owner)**

TEKTON CONSTRUCTION
9495 Sunset Dr. Suite B-180, Miami, FL 33173
P:(305) 631-2578 F:(786) 615-5741

PCO #009

PROPOSAL

Issue Date:	April 18, 2024
Project:	Fort Lauderdale Police Headquarters & Parking Garage
Project #:	126
Architect:	AECOM
Engineer:	Thornton Tomasetti
GC:	Moss & Associates
Ref:	

Description of Work: This proposal is for all additional costs associated with RFI #435 North Deflection Beam Repairs. The repair work was authorized by the Moss team. Attached are signed T&M work tickets verifying the manpower and material.

SUMMARY COST

Item #	Scope Description	Total Cost ($)
	Column @ H2 & J2	$9,913.26
	Footers @H2 & J2	$23,512.12
	Total	**$33,425.38**

Sub-total.	$	29,065.55
Overhead	$	1,453.28
Profit	$	2,906.56
Total	**$**	**33,425**

Notes:

1	*Tekton Construction disclaims to the fullest extent authorized by law all warranties, whether expressed or implied, for the scope of work stated above.*
2	

Disclaimer: *Tekton Construction reserves it's right to future claims in the event that is has omitted any work in relation to this proposal.*

Thank you,

Sean Aleman
900 SW 70th Avenue
Miami, Florida 33134
P:305-631-2578 F:786-615-5741

TEKTON CONSTRUCTION
9495 Sunset Dr. Suite B-180, Miami, FL 33173
P:(305) 631-2578 F:(786) 615-5741

PCO #009 - Deflection Beam Repairs

Description	$ / Unit	Quantity	UOM	Price
Scope Description				
RFI 435 North Beam Deflection				
Column @ H2 & J2				
T&M - (2-men x 4 hrs)				
Labors	$ 45.00	8.00	hrs	$ 360.00
T&M - (2-men x 10 hrs)				
Ironworker	$ 75.00	20.00	hrs	$ 1,500.00
T&M - (4-men x 4 hrs)				
(2) Carpenters	$ 65.00	20.00	hrs	$ 1,300.00
(2) Labors	$ 45.00	20.00	hrs	$ 900.00
T&M - (2-men x 3 hrs)				
Labors	$ 45.00	6.00	hrs	$ 270.00
Concrete Material (5000 psi PRPM)	$ 252.00	10.00	cyd	$ 2,520.00
Concrete Pumping w/ Operator	$ 150.00	3.00	hrs	$ 450.00
Rebar Material (1,091 IBS)	$ 819.00	1.00	lumpsum	$ 819.00
Misc Materials (drill bits, tie wire, epoxy, banding, nails etc..)	$ 250.00	1.00	lumpsum	$ 250.00
Footings @ H2 & J2				
T&M - (4-men x 10 hrs)				
(1) Operator	$ 65.00	10.00	hrs	$ 650.00
(3) Labors	$ 45.00	30.00	hrs	$ 1,350.00
T&M - (5-men x 10 hrs)				
(2) Ironworkers	$ 75.00	20.00	hrs	$ 1,500.00
(3) Labors	$ 45.00	30.00	hrs	$ 1,350.00
T&M - (4-men x 8 hrs)				
(2) Ironworkers	$ 75.00	16.00	hrs	$ 1,200.00
(2) Labors	$ 45.00	16.00	hrs	$ 720.00
T&M - (4-men x 3 hrs)				
(4) Labors	$ 45.00	12.00	hrs	$ 540.00
Concrete Material (4000 psi Regular)	$ 252.00	40.00	cyd	$ 10,080.00
Rebar Material (2,061 IBS)	$ 1,546.00	1.00	Lumpsum	$ 1,546.00
Termite Treatment (400 sq ft / under min. surcharge)	$ 400.00	1.00	lumpsum	$ 400.00
Misc Materials (drill bits, tie wire, epoxy, banding, nails etc..)	$ 250.00	1.00	lumpsum	$ 250.00
Taxes (7%) (For Materials Only)				$ 1,110.55
Sub-Total				$ 29,065.55
O.H. (5%)				$ 1,453.28
Profit (10%)				$ 2,906.56
GRAND TOTAL				**$ 33,425**

Moss & Associates LLC
2101 N. Andrews Avenue
Fort Lauderdale, Florida 33311
P: (954) 524-5678

Project: B372302 Fort Lauderdale Police Headquarters
1300 W Broward Blvd
Fort Lauderdale, Florida 33312

RFI #435: Roof North Beam Deflection

Status	Open		
To	Yanique Virgo (AECOM) *(Response Required)* Evan Siegel (AECOM)	**From**	Vanessa Navarrete (Moss & Associates LLC - FLL)
Date Initiated	Mar 18, 2024	**Due Date**	Mar 25, 2024
Location		**Project Stage**	
Cost Impact		**Schedule Impact**	
Spec Section		**Cost Code**	
Drawing Number		**Reference**	
Linked Drawings			
Received From	Vanessa Navarrete (Moss & Associates LLC - FLL)	**Sub Job**	
Copies To	Surabhi Chawda (Moss & Associates LLC - FLL), Jennifer Escobar (Moss & Associates LLC - FLL), Aman Gusain (Moss & Associates LLC - FLL), Matthew Kane (Moss & Associates LLC - FLL), Angel Lopez (Moss & Associates LLC - FLL), David Lovern (City of Fort Lauderdale), Vanessa Navarrete (Moss & Associates LLC - FLL), Michael Perez-Gurri (Moss & Associates LLC - FLL)		
Subcontractor RFI #		**Priority**	Critical

Activity

Question

Question from Vanessa Navarrete Moss & Associates LLC - FLL *on Monday, Mar 18, 2024 at 11:27 AM EDT*

Moss observed these cracks going East and West on the roof, and there is a 3/4"-1/2" inch deflection on the slab (between grid lines 2 and 3 and between H and K).

Please advise on how to proceed.

Attachments
Roof North Beam Deflection backup.pdf

The cross sectional area of the top longitudinal reinforcing steel in beams RSB-76 and RSB-79 is too low. The Code requires a factor of safety of 1.55 for bending behavior in these beams. These beams currently have a factor of safety of 1.15 for bending behavior. This shows the beams are strong enough to support the current load, but the Code requires a better capacity-to-demand ratio for the completed, occupied building. It is worth noting that RSB-76 and RSB-79 are adequately reinforced for their shear demand. We checked all of the other cantilevers (RSB-73, RSB-82, 3SB-87, 3SB-90, 3SB-93, 3SB-96) in the building, and they all have the required reinforcing for their demand.

For RSB-76 and RSB-79, we can get the bending factor of safety up to the 1.55 requirement by reducing the cantilever length. We shall do this by increasing the size of the 3rd floor columns at H-2 and K-2 (see snapshots on the following page).

We have provided SSK-037 and SSK-038 at the end of this PDF, showing the the detailing at the bump-out of these two columns on the third floor. In addition, the spread footings at H-2 and J-2 require strengthening. Refer to new sheet HQ-S6-1-04, included herewith, for the description and detailing of the foundation strengthening. The foundation strengthening does not require any underpinning or shoring.

Note that the cracks do not require repair. As well, the precast panels do not need to be removed. They may be set to to their final position at any time before, during, or after the introduction of column size increase.

Eric Search, TT, 03/22/2024

SNAPSHOTS SHOWING INCREASE IN COLUMN DEPTH
TO REDUCE THE CANTILEVER LENGTH.

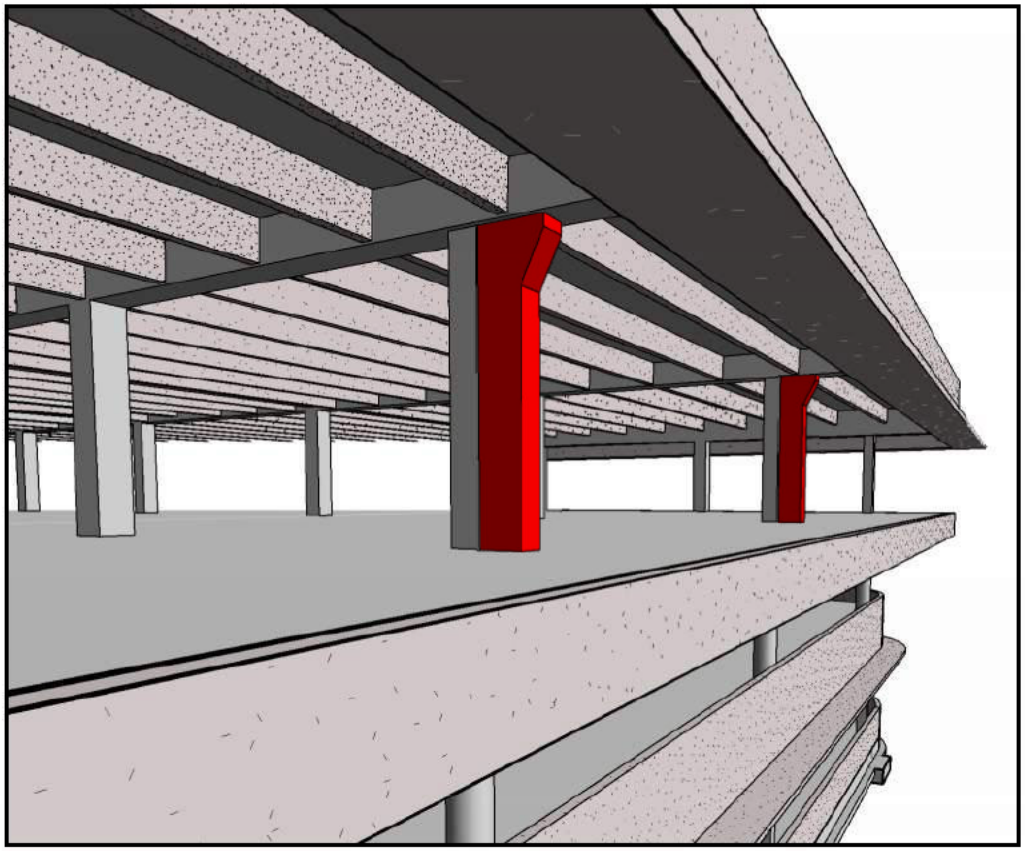

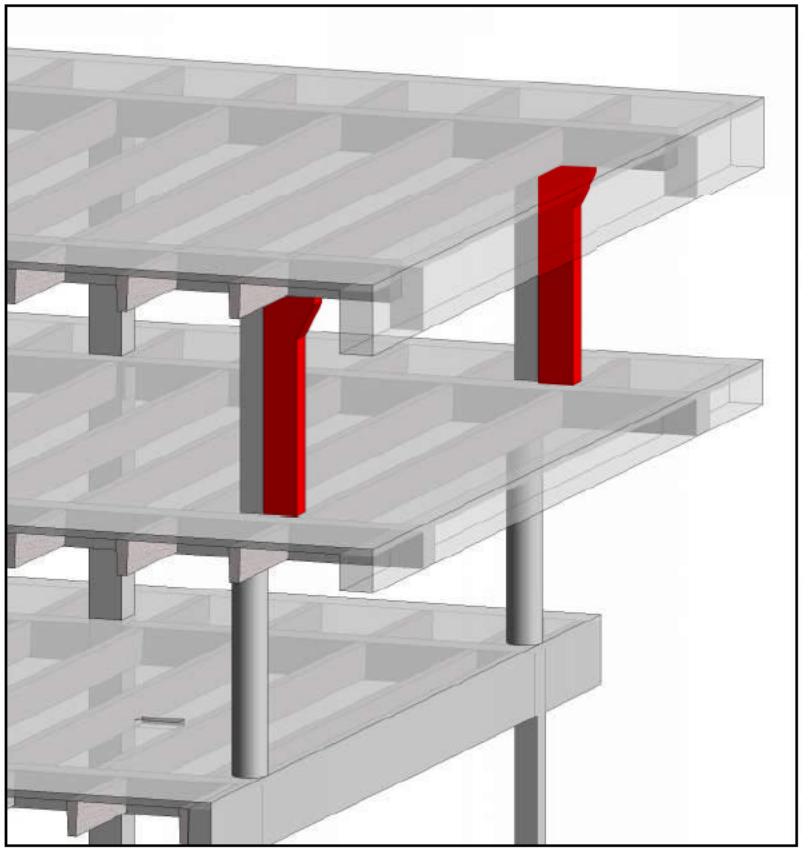

Snapshots by TT, 03/18/2024

RFI:

Roof North Beam Deflection

Attachment 1

DEPARTMENT OF SUSTAINABLE DEVELOPMENT
BUILDING DIVISION
APPROVED 8/16/2023
BLD-CNC-22070004
CITY OF FORT LAUDERDALE

Moss observed these cracks going east and west on the roof, and there is a 3/4"-1/2" inch deflection on the slab (between grid lines 2 & 3 and between H & K). Please advise on how to proceed.

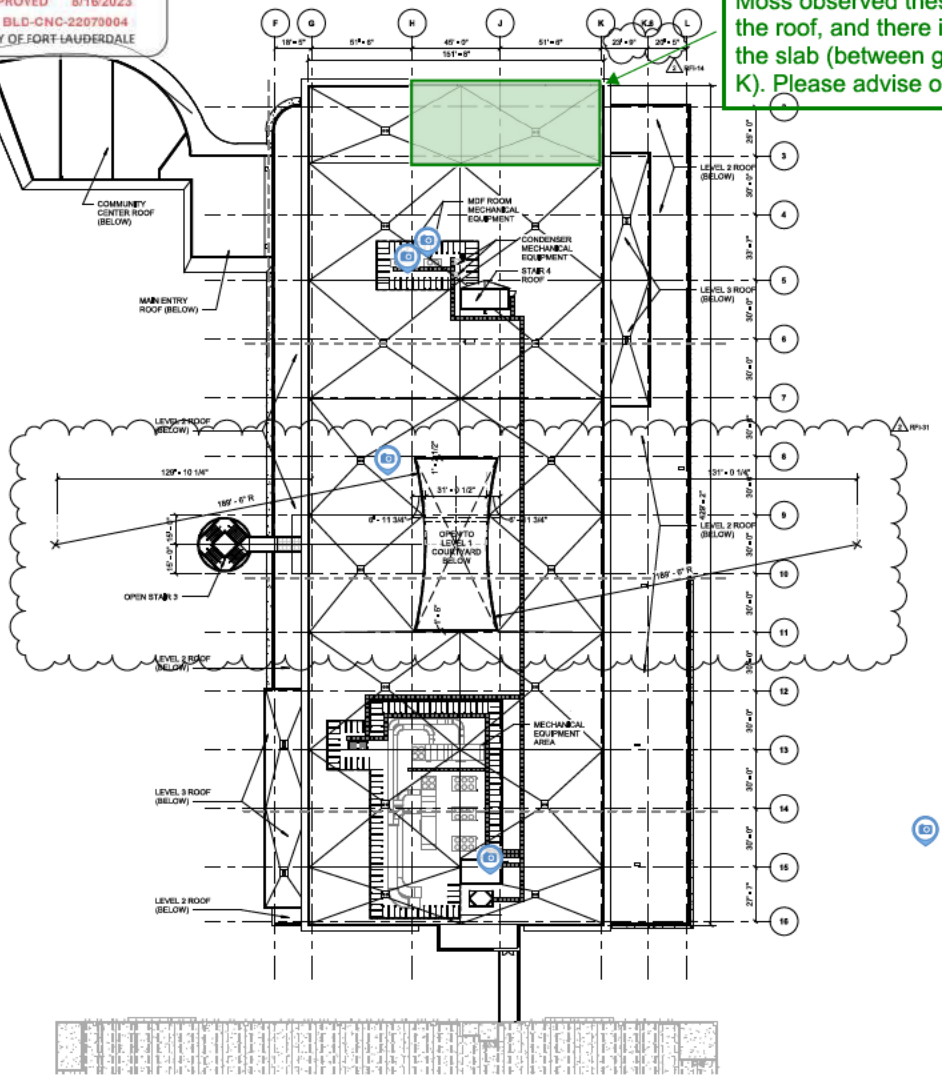

1 | HQ BLDG - DIMENSION PLAN LEVEL 4 - OVERALL
Scale: 1" = 30'-0"

GENERAL NOTES

1. THESE GENERAL NOTES APPLY TO SUBSEQUENT BUILDING AREA DIMENSION PLANS HQ-A2-1-1A THRU HQ-A2-1-3E AS DESIGNATED BY MATCH LINE.
2. REFER TO SHEET HQ-A0-1-01 AND HQ-A0-1-02 FOR ABBREVIATIONS, LEGENDS, SYMBOLS, AND GENERAL NOTES.
3. REFER TO HQ-A2-2-01 THRU HQ-A2-2-07 OVERALL FLOOR PLANS AND HQ-A2-2-1A THRU HQ-A2-2-3E AREA FLOOR PLANS FOR WALL ASSEMBLY TYPES, INTERIOR WINDOW TAGS AND DOOR NUMBERS NOT SHOWN IN DIMENSION PLANS.
4. DO NOT SCALE DRAWINGS. GIVEN NUMERIC DIMENSIONS GOVERN.
5. DIMENSIONS ARE TO CL OF COLUMN GRID OR FACE OF CONCRETE WALL, FACE OF CMU WALL, AND FACE OF STUD U.O.N. CMU DIMENSIONS ARE TO 8" NOMINAL MODULE U.O.N.
6. ALL DOOR FRAMES IN STUD PARTITIONS ARE OFFSET 4" AT THE HINGE SIDE. ALL DOOR FRAMES IN CMU PARTITIONS ARE OFFSET TO THE CLOSEST CLEAR BLOCK DIMENSION OF 8", U.O.N.
7. REFER TO HQ-A2-1-1A THRU HQ-A2-1-3E FOR BUILDING AREA A THRU AREA E DIMENSION PLANS.
8. REFER TO SHEETS HQ-A4-1-01 THRU HQ-A4-1-06 ENLARGED PLANS INDICATED BY CALLOUT FOR DIMENSIONS WITHIN INDIVIDUAL SPACES.
9. REFER TO SHEETS HQ-A4-5-01 THROUGH HQ-A4-5-04 FOR ENLARGED STAIR DIMENSIONS.
10. REFER TO SHEETS HQ-A4-6-01 THROUGH HQ-A4-6-03 FOR ENLARGED ELEVATOR PLAN DIMENSIONS.
11. REFER TO HQ-A6-0-00 SERIES FOR INTERIOR OPENINGS SCHEDULE AND DETAILS, COORDINATE WINDOW FRAME OPENINGS AT WALLS WITH SCHEDULED FRAME SIZES.
12. REFER TO HQ-A6-0-00 SERIES FOR DOOR SCHEDULES AND DETAILS, COORDINATE DOOR FRAME OPENINGS AT WALLS WITH SCHEDULED FRAME SIZES.
13. REFER TO ENLARGED ROOM PLANS INDICATED BY CALLOUT FOR ADDITIONAL DIMENSION WITHIN INDIVIDUAL SPACES. HOLD CRITICAL CLEAR DIMENSIONS WHERE NOTED IN ENLARGED PLANS.
14. FIELD VERIFY CLEARANCES FOR BUILT-IN MILLWORK, AT LOCATIONS WHERE MILLWORK OCCURS BETWEEN TWO WALLS OR COLUMNS, FINISH WALL SHALL EXTEND 1" BEYOND THE FRONT NOSING OF COUNTERTOP, U.O.N.
15. CONFIRM DIMENSIONS REQUIRING EQUIPMENT AND FURNITURE COORDINATION WITH MANUFACTURERS' REP. AND DESIGNER OF RECORD. DIMENSIONS MUST BE VERIFIED DURING SITE REVIEW FOR APPROVAL OF CHALK LINE LAYOUTS.
16. COORDINATE LAYOUT REVIEW SITE WALK-THROUGH WITH GC, OWNER'S REP., DOR AND MANUFACTURERS' REP. PRIOR TO FINAL WALL ROUGH-IN. COORDINATION OF ENGINEERING ITEMS, INCLUDING BUT LIMITED TO PLUMBING, POWER, TELE / DATA, AUDIO VISUAL, MUST BE REVIEWED AND APPROVED BY ARCHITECT AND OWNER PRIOR TO WALL CLOSE-IN.

AECOM

PROJECT
FORT LAUDERDALE POLICE HEADQUARTERS
1300 W BROWARD BLVD, FT LAUDERDALE, FL 33312

CLIENT
CITY OF FORT LAUDERDALE DEPARTMENT OF PUBLIC WORKS

PRIME CONSULTANT
AECOM
2 ALHAMBRA PLAZA, SUITE 900
CORAL GABLES, FL 33134
305.444.4691 tel 305.675.3843 fax
http://www.aecom.com
ARCHITECTURE - LICENSE NO. AA26000867
ENGINEERING CA LIC. NO. 6176

CONSULTANTS
STRUCTURAL
THORNTON TOMASETTI
101 NE THIRD AVENUE, SUITE 1170
FORT LAUDERDALE, FL 33301
954.903.9300 tel 954.903.9301 fax
www.thorntontomasetti.com/

PLUMBING & FIRE PROTECTION
HAMMOND & ASSOCIATES, INC
499 N.W. 70TH AVENUE, SUITE 201
PLANTATION, FL 33317
954.327.7111 tel 954.337.7154 fax
www.hammondengineers.com

CIVIL & TRAFFIC
KEITH
2312 S. ANDREWS AVE
FORT LAUDERDALE, FL 33316
954.788.3400 tel 000.000.0000 fax
www.keithcam.com

REGISTRATION
THIS ITEM HAS BEEN DIGITALLY SIGNED AND SEALED BY EVAN SIEGEL, REGISTERED ARCHITECT, STATE OF FLORIDA, LICENSE NO. AR10980 ON THE DATE INDICATED HERE. PRINTED COPIES OF THIS DOCUMENT ARE NOT CONSIDERED SIGNED AND SEALED AND THE SIGNATURE MUST BE VERIFIED ON ANY ELECTRONIC COPIES

MOSS Received 08/21/2023

ISSUE/REVISION

2	JUNE 16, 2023	PERMIT RESPONSES #5
1	JAN 27, 2023	SI-001
	JUNE 10, 2022	PERMIT SET

IR	DATE	DESCRIPTION

KEY PLAN

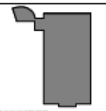

PROJECT NUMBER
60639620

SHEET TITLE
HEADQUARTERS BLDG - DIMENSION PLAN ROOF - OVERALL

SHEET NUMBER
HQ-A2-1-04

©2014 AECOM Corporation
PLANS ARE EXEMPT FROM PUBLIC DISCLOSURE PURSUANT TO F.S. 119.071(3)(b)1

RFI #

Roof North Beam Deflection

Attachment 2

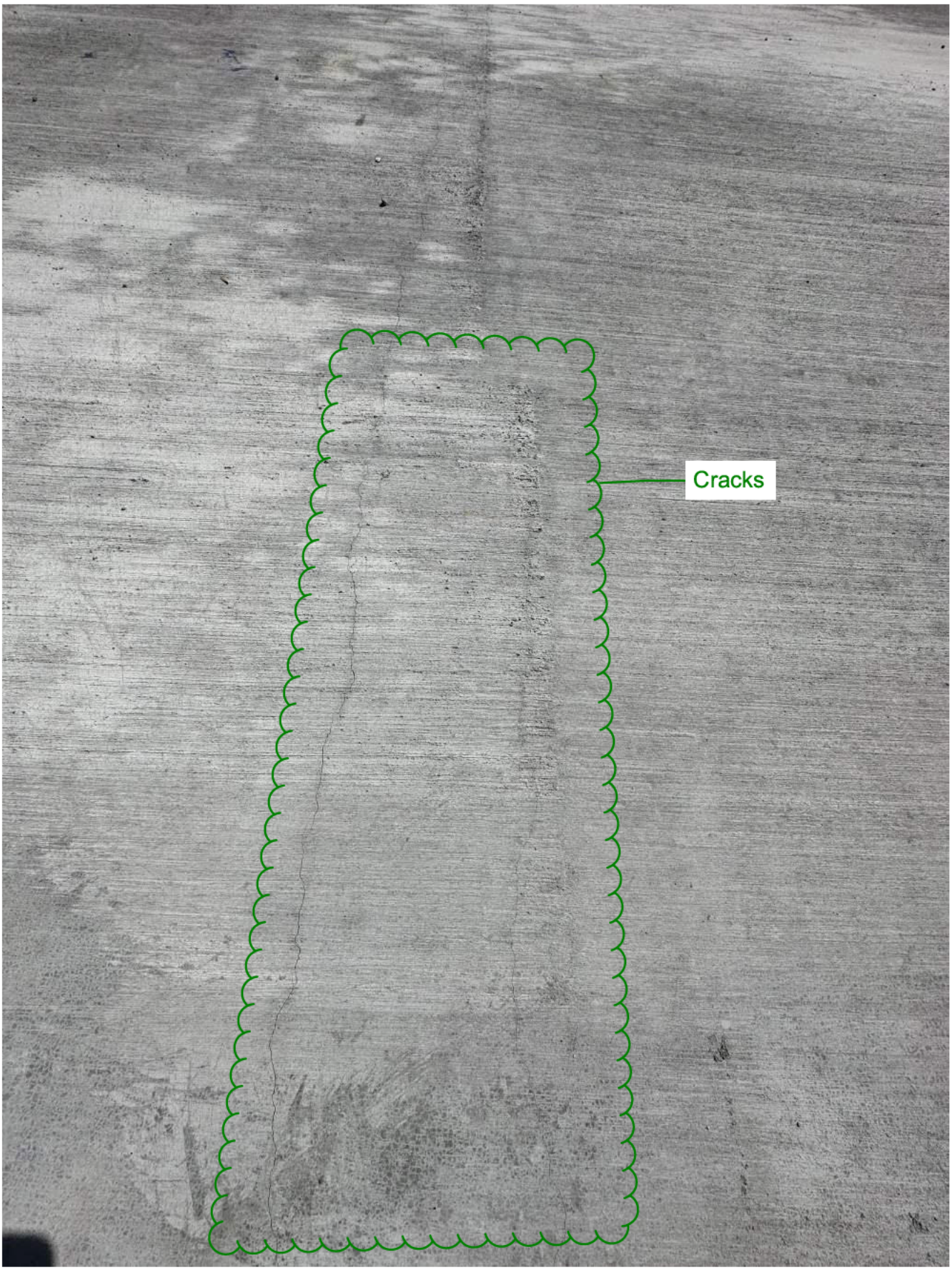

RFI #

Roof North Beam Deflection

Attachment 3

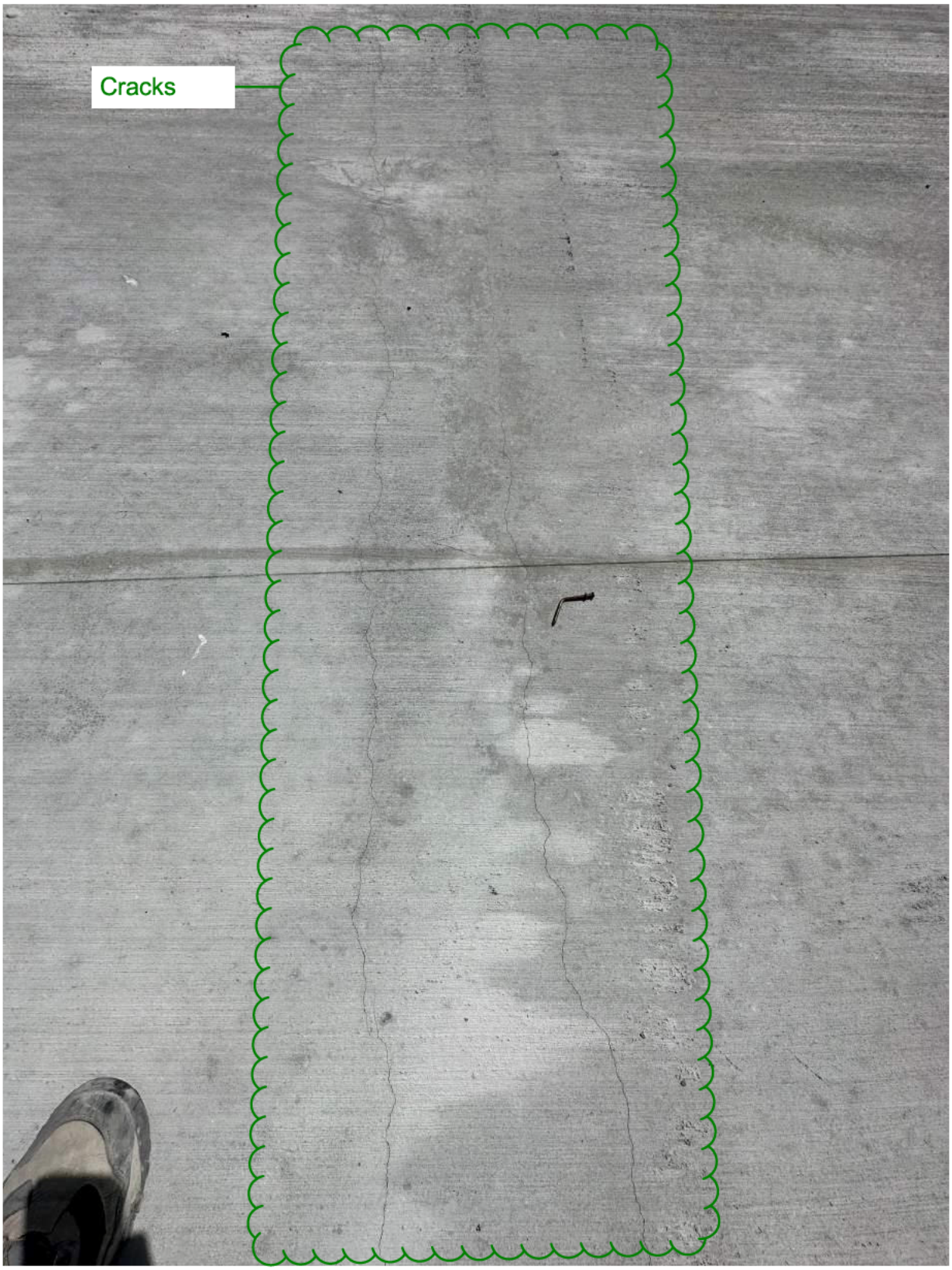

RFI #

Roof North Beam Deflection

Attachment 4

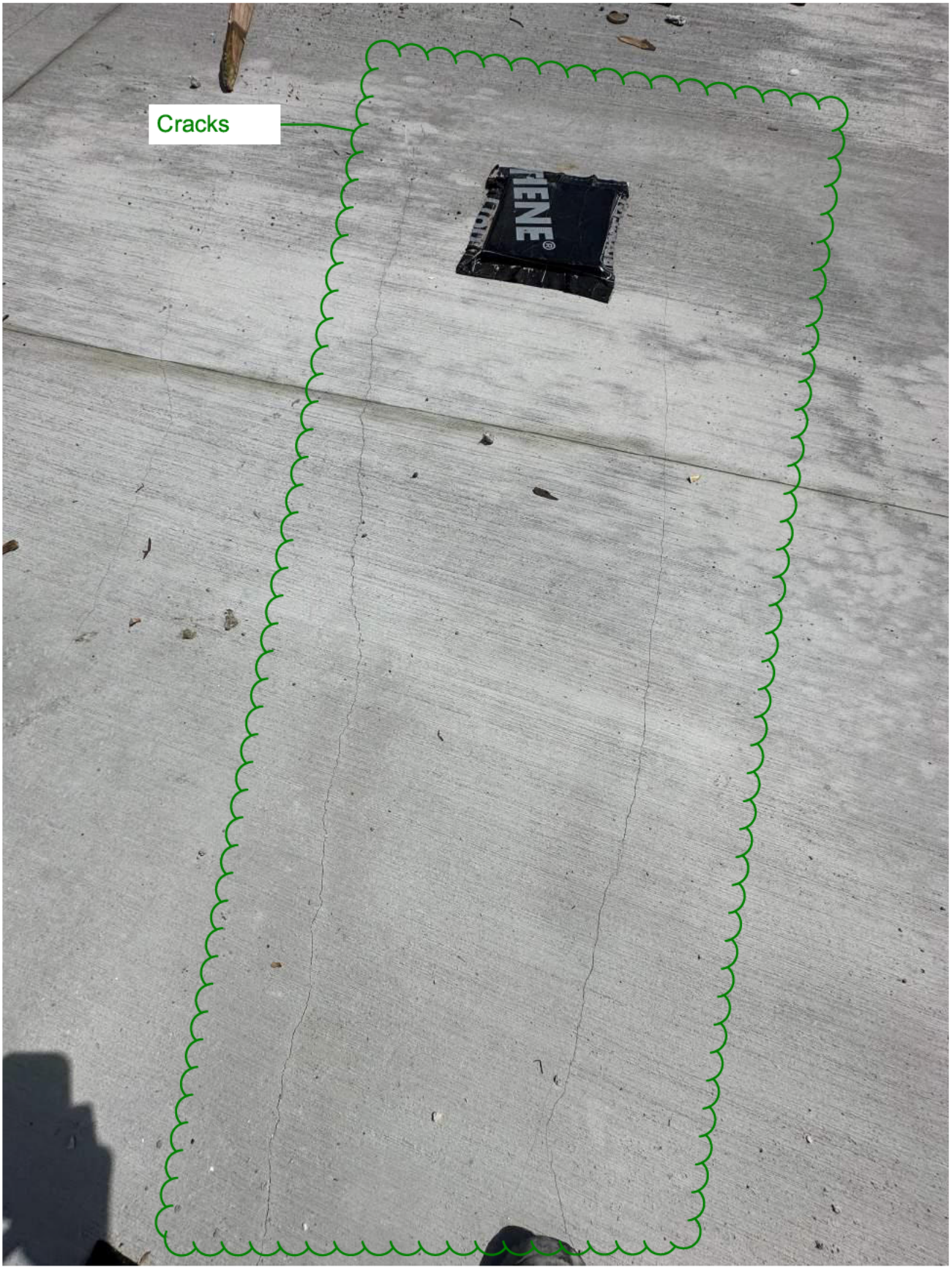

RFI #

Roof North Beam Deflection

Attachment #5



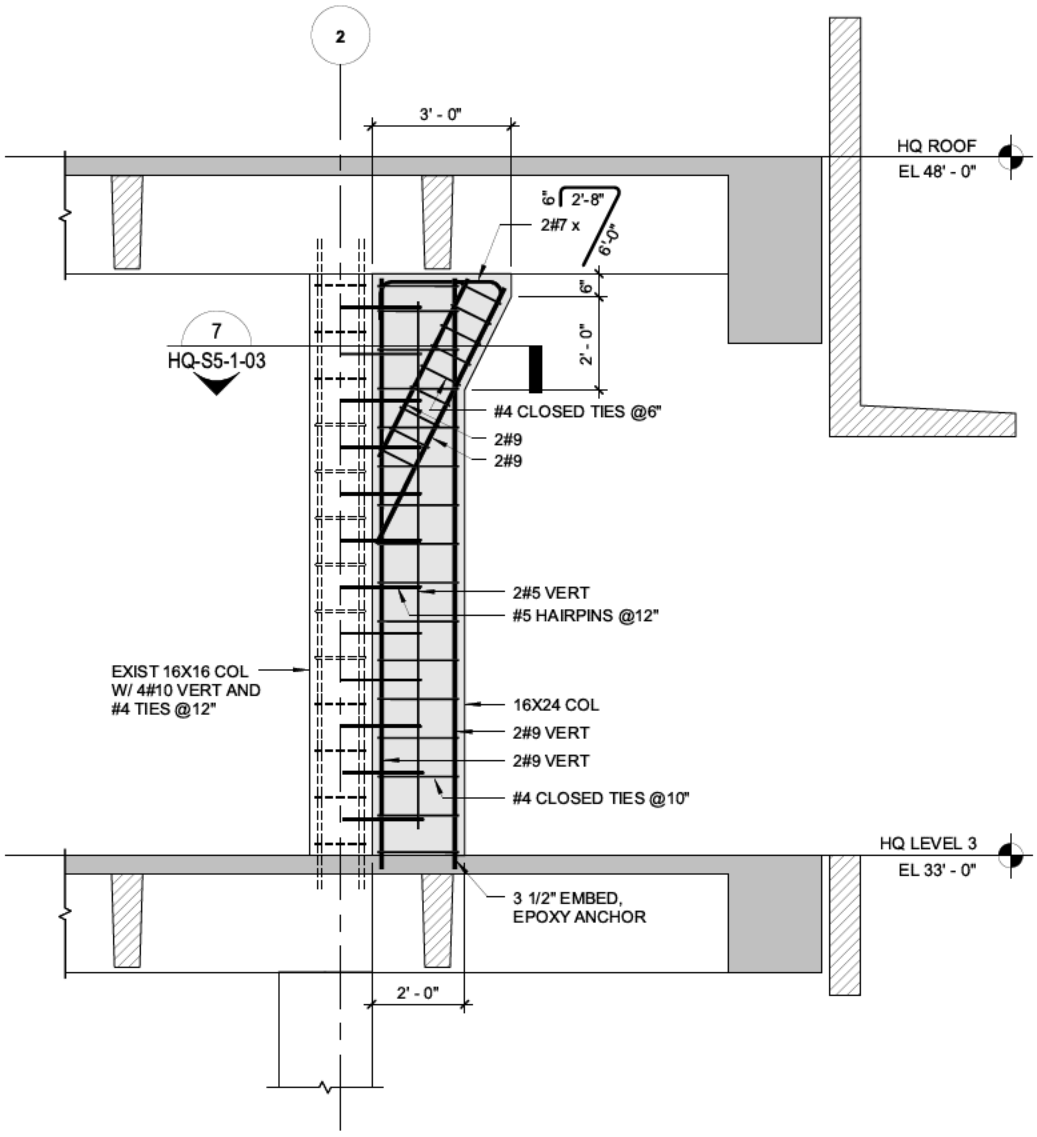

6 | **ELEVATION - COLUMN AT H-2 AND J-2**

HQ-S5-1-03 | Scale: 3/8" = 1'-0"

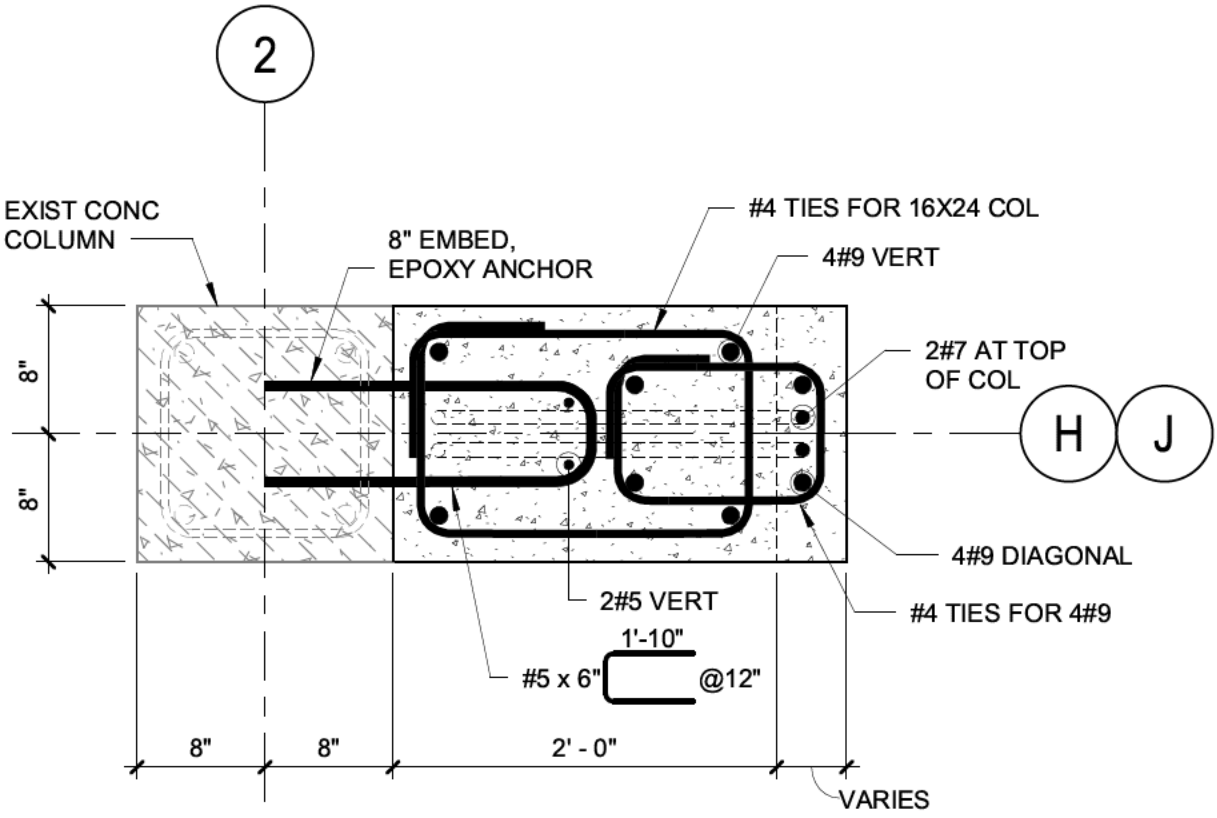

7 PLAN DETAIL - H-2 AND J-2

HQ-S5-1-03

Scale: 1" = 1'-0"

Thornton Tomasetti 101 NE 3rd AVENUE, SUITE 1170 FORT LAUDERDALE, FL 33101 FLORIDA C.A. #7519		PROJECT: FORT LAUDERDALE POLICE HQ	**SSK-038**
BY: ES	DATE: 03/18/2024	SUBJECT: RESPONSE TO RFI-435	CAM #24-0670 Exhibit 1
		REFERENCE: HQ-S5-1-03	

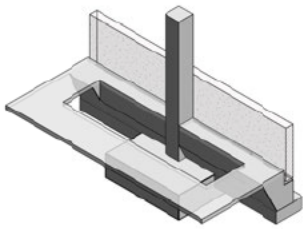

1 HQ-S6-1-04 — ISO VIEW #1 - CUT SLAB, DIG OUT FTG — Scale:

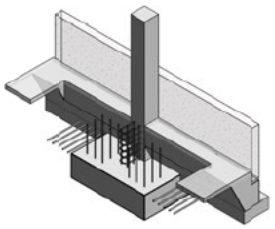

2 HQ-S6-1-04 — ISO VIEW #2 - INSTALL DOWELS — Scale:

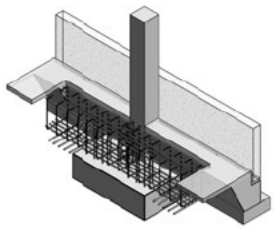

3 HQ-S6-1-04 — ISO VIEW #3 - INSTALL BEAM CAGE — Scale:

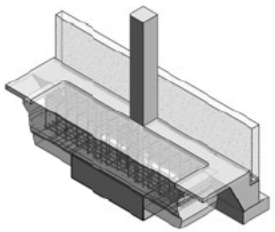

4 HQ-S6-1-04 — ISO VIEW #4 - INFILL W/ CONCRETE — Scale:

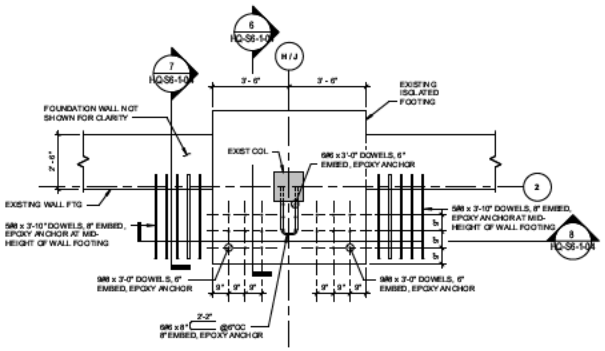

5 HQ-S6-1-04 — DETAIL PLAN VIEW - FOOTING AT H-2 & J-2 — Scale: 3/8" = 1'-0"

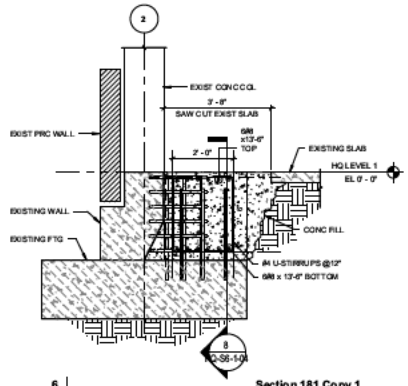

6 HQ-S6-1-04 — Section 181 Copy 1 — Scale: 1/2" = 1'-0"

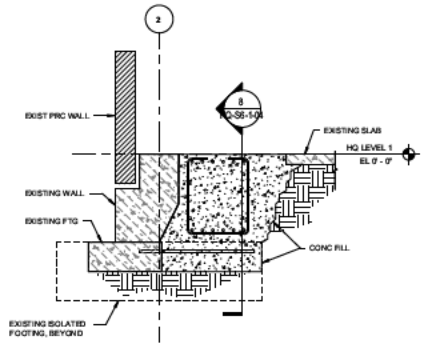

7 HQ-S6-1-04 — Section 181 — Scale: 1/2" = 1'-0"

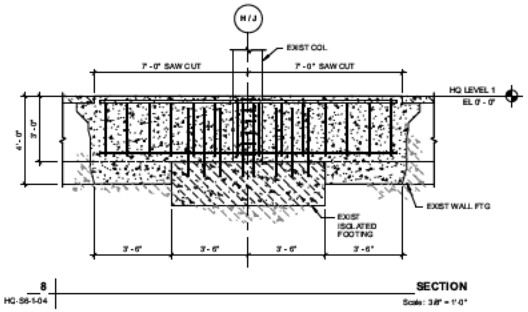

8 HQ-S6-1-04 — SECTION — Scale: 3/8" = 1'-0"

TO THE BEST OF THE ENGINEERS KNOWLEDGE, THE PLANS, DETAILS, AND SPECIFICATIONS COMPLY WITH THE APPLICABLE MIAMI-DADE BUILDING CODES.

©2016 AECOM Corporation

PLANS ARE EXEMPT FROM PUBLIC DISCLOSURE PURSUANT TO F.S. 119.071(3)(b)1

AECOM

PROJECT

FORT LAUDERDALE POLICE HEADQUARTERS

1300 W BROWARD BLVD, FT LAUDERDALE, FL 33312

CLIENT

CITY OF FORT LAUDERDALE DEPARTMENT OF PUBLIC WORKS

PRIME CONSULTANT

AECOM
2 ALHAMBRA PLAZA, SUITE 900
CORAL GABLES, FL 33134
305.444.4691 tel 305.675.3843 fax
http://w ww.aecom.com
ARCHITECTURE LICENSE NO. AA26002467
ENGINEERING CALIC. NO. 8115

CONSULTANTS

STRUCTURAL
THORNTON TOMASETTI
101 NE THIRD AVENUE, SUITE 1170 C.O.A. #7519
FORT LAUDERDALE, FL 33301
954.903.3300 tel 954.903.3301 fax
www.thornto ntomasetti.com/

PLUMBING & FIRE PROTECTION
HAMMOND & ASSOCIATES, INC
499 NW 70TH AVENUE, SUITE 201
PLANTATION, FL 33317
954.327.7111 tel 000.0 00.0000 fax
www.ha mmondengin eers.com

CIVIL & TRAFFIC
KEITH
2312 S. ANDREWS AVE
FORT LAUDERDALE, FL 33316
954.788.3400 tel 000.0 00.0000 fax
www.keithe ers.co m

REGISTRATION

ISSUE/REVISION

1	Date 9	Revision 9

NO.	DATE	DESCRIPTION

KEY PLAN

PROJECT NUMBER

60639620

SHEET TITLE

FOUNDATION DETAILS AT H-2 AND J-2

SHEET NUMBER

HQ-S6-1-04

Designer Designer Checked Checker Approved Approver ARCH D 24" x 36"
Project Management Initials:
Last Plotted: 3/28/2016 8:43:23 PM
Filename: M:\Jobs\FtLauderdale\60639620 FLPH\Revit\60639620 FLPH_HQ_S TRUC_R2014.rvt
Protect to ___ % Post-Consumer Recycled or Certified Paper

TEKTON
CONSTRUCTION

900 SW 70h Ave
Miami, Florida 33144
Phone: 305-631-2578
Fax: 786-715-8986
www.Tektonconstructioncorp.com

CHANGE ORDER

W.O. # :
W.O. Date : 3/29/2024

Requested By: Gabe Weigand
Customer ID:

Work Order General Description / Location	BILL TO	Project / Job
Deflection column repairs	Moss & Associates	Fort Lauderdale Police Headquarters

QTY	DESCRIPTION	UOM	UNIT PRICE/UOM	LINE TOTAL
	Manpower - Drill & epoxy U-bars into existing columns (2 guys 4 hours)			
				-
				-
				-

Other Comments or Special Instructions

1. Total payment due 30 days after completion of work
2. Please refer to the W.O. # in all your correspondence
3. Please send correspondence regarding this work order to:
   Gabriel Hernandez, 305-631-2578 , Gabriel@tektonconstructioncorp.com

SUBTOTAL		
O.H. & Profit RATE		10.000
Profit	$	-
Bond 1.5%	$	-
TOTAL	$	-

Make checks payable to
Tekton Construction Corp

I agree that all work has been performed to my satisfaction.

Signature: _____
Client Company Authorized Agent

Completed Date: _____

Date: _____

Thank You For Your Business!

© 2011-2014 Vertex42.com

TEKTON
CONSTRUCTION

900 SW 70h Ave
Miami, Florida 33144
Phone: 305-631-2578
Fax: 786-715-8986
www.Tektonconstructioncorp.com

CHANGE ORDER

W.O. # :
W.O. Date : 4/1/2024

Requested By: Gabe Weigand
Customer ID:

Work Order General Description / Location	BILL TO	Project / Job
Deflection column repairs	Moss & Associates	Fort Lauderdale Police Headquarters

QTY	DESCRIPTION	UOM	UNIT PRICE/UOM	LINE TOTAL
	Manpower - Fabricate columns to rebar detail (2 guys 10 hours)			
	Steel (1,091 pounds)			
				-
				-
				-

Other Comments or Special Instructions

1. Total payment due 30 days after completion of work
2. Please refer to the W.O. # in all your correspondence
3. Please send correspondence regarding this work order to:
   Gabriel Hernandez, 305-631-2578 , Gabriel@tektonconstructioncorp.com

SUBTOTAL		
O.H. & Profit RATE		10.000%
Profit	$	-
Bond 1.5%	$	-
TOTAL	$	-

Make checks payable to
Tekton Construction Corp

I agree that all work has been performed to my satisfaction.

Signature: _____ Moss
Client Company Authorized Agent

Completed Date: _____

Date: _____

Thank You For Your Business!

© 2011-2014 Vertex42.com

TEKTON
CONSTRUCTION

900 SW 70h Ave
Miami, Florida 33144
Phone: 305-631-2578
Fax: 786-715-8986
www.Tektonconstructioncorp.com

CHANGE ORDER

W.O. # :
W.O. Date : 4/2/2024

Requested By: Gabe Weigand
Customer ID:

Work Order General Description / Location	BILL TO	Project / Job
Deflection column repairs	Moss & Associates	Fort Lauderdale Police Headquarters

QTY	DESCRIPTION	UOM	UNIT PRICE/UOM	LINE TOTAL
	Manpower - Close the column & pour (4 guys 10 hours)			

Other Comments or Special Instructions

1. Total payment due 30 days after completion of work
2. Please refer to the W.O. # in all your correspondence
3. Please send correspondence regarding this work order to:
   Gabriel Hernandez, 305-631-2578 , Gabriel@tektonconstructioncorp.com

SUBTOTAL		
O.H. & Profit RATE		10.000%
Profit	$	-
Bond 1.5%	$	-
TOTAL	$	-

Make checks payable to
Tekton Construction Corp

I agree that all work has been performed to my satisfaction.

Signature: Jimmy L Moss

Client Company Authorized Agent

Completed Date: _____

Date: _____

Thank You For Your Business!

© 2011-2014 Vertex42.com

TEKTON
CONSTRUCTION

900 SW 70h Ave
Miami, Florida 33144
Phone: 305-631-2578
Fax: 786-715-8986
www.Tektonconstructioncorp.com

CHANGE ORDER

W.O. # :
W.O. Date : 4/3/2024

Requested By: Gabe Weigand
Customer ID:

Work Order General Description / Location	BILL TO	Project / Job
Deflection column repairs	Moss & Associates	Fort Lauderdale Police Headquarters

QTY	DESCRIPTION	UOM	UNIT PRICE/UOM	LINE TOTAL
	Manpower - Strip columns (2 guys 3 hours)			
				-
				-

Other Comments or Special Instructions

1. Total payment due 30 days after completion of work
2. Please refer to the W.O. # in all your correspondence
3. Please send correspondence regarding this work order to:
   Gabriel Hernandez, 305-631-2578 , Gabriel@tektonconstructioncorp.com

SUBTOTAL		
O.H. & Profit RATE		10.000%
Profit	$	-
Bond 1.5%	$	-
TOTAL	$	-

Make checks payable to
Tekton Construction Corp

I agree that all work has been performed to my satisfaction.

Signature: Jimmy T Moss

Client Company Authorized Agent

Completed Date: _____

Date: _____

Thank You For Your Business!

© 2011-2014 Vertex42.com

TEKTON
CONSTRUCTION

900 SW 70h Ave
Miami, Florida 33144
Phone: 305-631-2578
Fax: 786-715-8986
www.Tektonconstructioncorp.com

CHANGE ORDER

W.O. # :
W.O. Date : 4/1/2024

Requested By: Gabe Weigand
Customer ID:

Work Order General Description / Location	BILL TO	Project / Job
Deflection footing repairs	Moss & Associates	Fort Lauderdale Police Headquarters

QTY	DESCRIPTION	UOM	UNIT PRICE/UOM	LINE TOTAL
	Manpower - Chipping thickened edge, digging dirt out, compacting (4 guys 10 hours)			
				-
				-
				-

Other Comments or Special Instructions

1. Total payment due 30 days after completion of work
2. Please refer to the W.O. # in all your correspondence
3. Please send correspondence regarding this work order to:
   Gabriel Hernandez, 305-631-2578 , Gabriel@tektonconstructioncorp.com

SUBTOTAL		
O.H. & Profit RATE		10.000%
Profit	$	-
Bond 1.5%	$	-
TOTAL	$	-

Make checks payable to
Tekton Construction Corp

I agree that all work has been performed to my satisfaction.

Signature: Jimmy L Moss
Client Company Authorized Agent

Completed Date: _____

Date: _____

Thank You For Your Business!

© 2011-2014 Vertex42.com

TEKTON
CONSTRUCTION

900 SW 70h Ave
Miami, Florida 33144
Phone: 305-631-2578
Fax: 786-715-8986
www.Tektonconstructioncorp.com

CHANGE ORDER

W.O. # :
W.O. Date : 4/2/2024

Requested By: Gabe Weigand
Customer ID:

Work Order General Description / Location	BILL TO	Project / Job
Deflection footing repairs	Moss & Associates	Fort Lauderdale Police Headquarters

QTY	DESCRIPTION	UOM	UNIT PRICE/UOM	LINE TOTAL
	Manpower - Drill & epoxy dowels, fabricate steel beam (5 guys 10 hours)			
	Concrete drill bits (2 - 1", 2 - 1 1/4")			
	Epoxy (2 boxes)			
	Tie wire (2 boxes)			
				-
				-
				-

Other Comments or Special Instructions

1. Total payment due 30 days after completion of work
2. Please refer to the W.O. # in all your correspondence
3. Please send correspondence regarding this work order to:
   Gabriel Hernandez, 305-631-2578 , Gabriel@tektonconstructioncorp.com

SUBTOTAL		
O.H. & Profit RATE		10.000%
Profit	$	-
Bond 1.5%	$	-
TOTAL	$	-

Make checks payable to
Tekton Construction Corp

I agree that all work has been performed to my satisfaction.

Signature: Jimmy J Moss
Client Company Authorized Agent

Completed Date: _____

Date: _____

Thank You For Your Business!

© 2011-2014 Vertex42.com

TEKTON
CONSTRUCTION

900 SW 70h Ave
Miami, Florida 33144
Phone: 305-631-2578
Fax: 786-715-8986
www.Tektonconstructioncorp.com

CHANGE ORDER

W.O. # :
W.O. Date : 4/3/2024

Requested By: Gabe Weigand
Customer ID:

Work Order General Description / Location	BILL TO	Project / Job
Deflection footing repairs	Moss & Associates	Fort Lauderdale Police Headquarters

QTY	DESCRIPTION	UOM	UNIT PRICE/UOM	LINE TOTAL
	Manpower - Tie in repair rebar detail (4 guys 8 hours)			
	Bugspray (400 sq ft)			
	Steel (2,061 pounds)			
				-
				-
				-

Other Comments or Special Instructions

1. Total payment due 30 days after completion of work
2. Please refer to the W.O. # in all your correspondence
3. Please send correspondence regarding this work order to:
   Gabriel Hernandez, 305-631-2578 , Gabriel@tektonconstructioncorp.com

SUBTOTAL		
O.H. & Profit RATE		10.000%
Profit	$	-
Bond 1.5%	$	-
TOTAL	$	-

Make checks payable to
Tekton Construction Corp

I agree that all work has been performed to my satisfaction.

Signature: Jimmy L Moss

Client Company Authorized Agent

Completed Date: _____

Date: _____

Thank You For Your Business!

© 2011-2014 Vertex42.com

TEKTON
CONSTRUCTION

900 SW 70h Ave
Miami, Florida 33144
Phone: 305-631-2578
Fax: 786-715-8986
www.Tektonconstructioncorp.com

CHANGE ORDER

W.O. # :
W.O. Date : 4/4/2024

Requested By: Gabe Weigand
Customer ID:

Work Order General Description / Location	BILL TO	Project / Job
Deflection footing repair	Moss & Associates	Fort Lauderdale Police Headquarters

QTY	DESCRIPTION	UOM	UNIT PRICE/UOM	LINE TOTAL
	Manpower - Pour & finish footings (4 guys 3 hours)			
	Concrete (40 yards 4000 psi regular)			
	Epoxy (2 boxes)			
				-
				-
				-

Other Comments or Special Instructions

1. Total payment due 30 days after completion of work
2. Please refer to the W.O. # in all your correspondence
3. Please send correspondence regarding this work order to:
   Gabriel Hernandez, 305-631-2578 , Gabriel@tektonconstructioncorp.com

SUBTOTAL		
O.H. & Profit RATE		10.000%
Profit	$	-
Bond 1.5%	$	-
TOTAL	$	-

Make checks payable to
Tekton Construction Corp

I agree that all work has been performed to my satisfaction.

Signature: Jimmy T Moss

Client Company Authorized Agent

Completed Date: _____

Date: _____

Thank You For Your Business!

© 2011-2014 Vertex42.com

PEGASUS
PAINTING & WATERPROOFING

5601 POWERLINE ROAD
SUITE 102-103
FORT LAUDERDALE, FL 33309

O: 954.55.4616
F: 954.944.1930
www.pegasusfl.us

SUBMITTED TO:
Moss & Associates
2101 N Andrews Ave., Suite 300
Fort Lauderdale, FL 33311

PHONE: 954-769-8200
EMAIL: Dnottage@mosscm.com

DATE: May 8, 2024
ATTN: D'von Nottage
RE: Fort Lauderdale Police Headquarter and PG

Per plans, scope sheets and specifications, Pegasus Painting & Waterproofing proposes the following scope of work and pricing for the above referenced project:

Addenda received: As per GC requirement.
Selections bidding: 070000 WATERPROOFING
Pegasus Painting & Waterproofing wil provide all materials, lifts, and supplies for the scope of work.

CHANGE ORDER REQUEST #15 - WEATHER BARRIER LIQUID FLASHING @ OPENINGS			
MATERIAL	LOCATION		
LIQUID-FLASHING WATERPROOFING SYSTEM			
SOPRASEAL LIQUID FLASHING (60 LFt)	3RD LVL HQ - NORTHSIDE : EXTERIOR SILL OPENING BETWEEN "H" & "J" GRID LINE.	$	574.00

ADDITIONAL COST BREAKOUT		
LABOR BREAKDOWN (5 HRS @ $48/HR)	$	240.00
MATERIAL BREAKDOWN	$	219.82
MATERIAL DELIVERY FEE	$	62.00
BURDEN (10%)	$	52.18

CHANGE ORDER REQUEST #15 - WEATHER BARRIER LIQUID FLASHING @ OPENINGS $ 574.00

EXCLUSIONS & QUALIFICATIONS:

1. For P&P Bond, add 1.8%.
2. Grinding, prep or touch-up of welds, not included.
3. Painting and touch-up of mechanical equipment and ductwork, not included.
4. Bondo prep of metal surfaces, not included.
5. Signage and graphics, not included.
6. Painting and color coding of pipes, not included.
7. Prep work necessary to bring walls to an acceptable condition for painting, by others.
8. Parking lot, vehicular, and pedestrian markings, not included.
9. Painting and caulking at sidewalks, curbs and ramps, not included.
10. Finishing of millwork, casework, cabinetry, shelving, and any attached trim is not included.
11. Sealing of Penetrations is excluded.

Please let me know if you have any questions. Thank you for this opportunity.

Jesus Gonzalez
Project Manager/Estimator
PEGASUS
Pegasus Painting and Waterproofing, LLC.
O: *954.755.4616*
F: *954.944.1930*
C: 954-218-1127
Jesusg@pegasusfl.us
www.pegasusfl.us

D'von Nottage

From: Paige Ioia <pioia@keithteam.com>
Sent: Wednesday, May 1, 2024 10:50 AM
To: D'von Nottage
Cc: Matthew Kane
Subject: RE: Roof North Beam Deflection

CAUTION: This email originated from outside of Moss

Do not click links or open attachments unless you can confirm the sender and know the content is safe.

Be careful of any attachments or links that ask for your password.

Good Morning,

So far since we began this exercise in the beginning of April, I believe our first day out there for this was 04/05.. we have been on site every morning between 2-3 hours for this, plus office time to generate the reports.

Beginning tomorrow when we add the 6 additional requested points, we might be anywhere between 3-4 hours range for field time.

We are currently at a total of $7,725 for field and office effort on this task (not including this morning's trip).

Thanks

Moss assumes (1) more month of monitoring costs at $7,725.00

Therefore providing a current projected cost of $15,450.00. Should the elevation monitoring extend beyond 5/31/24, we reserve our rights to revaluate and submit any additional costs above and beyond this current estimate of $15,450.00

KEITH

Paige Ioia, CST I
Project Surveyor
Office: 954.788.3400
Email: pioia@keithteam.com
www.KEITHteam.com

From: D'von Nottage <DNottage@mosscm.com>
Sent: Tuesday, April 30, 2024 5:07 PM
To: Paige Ioia <pioia@keithteam.com>
Cc: Matthew Kane <MKane@mosscm.com>
Subject: Re: Roof North Beam Deflection

That would be awesome thankyou

Get Outlook for iOS

From: Paige Ioia <pioia@keithteam.com>
Sent: Tuesday, April 30, 2024 4:31:49 PM
To: D'von Nottage <DNottage@mosscm.com>



ScanTek GPR
6511 Nova Drive #269
Davie, FL 33317
(954) 651-7009 Fax

Bill To:

MOSS
2101 N ANDREWS AVE.
FORT LAUDERDALE, FL 33311

INVOICE

INVOICE NO: 4784
INVOICE DATE: 05/06/24
PAYMENT TERMS: Net 30 Days
CUSTOMER #: 000133
PURCH ORDER #:
JOB REQUEST #:
ORDERED BY:

JOB SITE:

FTL POLICE STATION
1300 WEST BROWARD BLVD
FTL, FL

QTY	ITEM	DESCRIPTION OF WORK	UNIT PRICE	AMOUNT
1.00	GPR	4/25 GPR SCAN Purpose of the scan was to mark out the rebar in multiple areas of rebar on the roof ----	800.00each	800.00
1.00	GPR	4/29 GPR SCAN Purpose of the scan was to locate and mark all rebar within the desired areas on the roof , Marked all rebar in black and blue . Black is representing the top layer the blue is the bottom layer of rebar . ---- Marked the rough ends of the beams and column in red . Job pending completion. They need us back tomorrow.	1,600.00each	1,600.00
1.00	GPR	4/30 GPR SCAN Purpose of the scan was to locate and mark all rebar within the beam on the 3rd floor north side of the building . Marked all rebar in black . ----	1,600.00each	1,600.00
1.00	GPR	5/2 GPR SCAN Purpose of the scan was to locate a horizontal rebar within the last 2 inches of the beam running east to west , was un	1,600.00each	1,600.00

Thank you for your business!

PMT TERMS:

NET 30 DAYS PAYMENT IS DUE UPON PRESENTATION OF PROJECT INVOICE. THE CUSTOMER AGREES TO PAY AN ADDITIONAL $100 PER MONTH AFTER 30 DAYS AS WELL AS COSTS FOR LIENS & ATTORNEY'S FEES INCURRED AS A RESULT OF TAKING LEGAL ACTION FOR FOR NON-PAYMENT.

GPR TERMS:

GROUND PENETRATING RADAR IS A GEOPHYSICAL MAPPING TECHNIQUE. SCANTEK GPR, LLC. CANNOT GUARANTEE WE WILL BE ABLE TO LOCATE ALL UTILITIES ON SITE. IN THE EVENT OUR INTERPRETATION IS INACCURATE, WE DO NOT ACCEPT LIABILITY FOR, AND YOU AGREE TO RELEASE US FROM, ALLEGED NEGLIGENCE AND/OR DAMAGES. SCANTEK GPR, LLC. IS NOT A UTILITY LOCATING COMPANY. THE DECISION TO PROCEED WITH CUTTING, DRILLING, BORING OR EXCAVATION IS LEFT ENTIRELY UP TO THE CUSTOMER.



ScanTek GPR
6511 Nova Drive #269
Davie, FL 33317
(954) 651-7009 Fax

Bill To:

MOSS
2101 N ANDREWS AVE.
FORT LAUDERDALE, FL 33311

INVOICE

INVOICE NO: 4784
INVOICE DATE: 05/06/24
PAYMENT TERMS: Net 30 Days
CUSTOMER #: 000133
PURCH ORDER #:
JOB REQUEST #:
ORDERED BY:

JOB SITE:

FTL POLICE STATION
1300 WEST BROWARD BLVD
FTL, FL

QTY	ITEM	DESCRIPTION OF WORK	UNIT PRICE	AMOUNT
		able to locate this item . Marked all rebar in black . Job completed.		
1.00	REPORT	GPR REPORT -BASIC REPORT PROVIDED -PRICE OF REPORT IS PER MOBILIZATION -ALL INFO NEEDED ON REPORT MUST BE PROVIDED TO OPERATOR PRIOR TO SCAN -ANY ADDITIONAL INFO NEEDED ON REPORT AFTER SCAN STARTED, MAY RESULT IN ADDITIONAL SCANNING/BILLING	0.00each	0.00
1.00	REPORT	GPR Report	200.00each	200.00

SUBTOTAL:	**$5,800.00**
SALES TAX:	**$0.00**
TOTAL:	**$5,800.00**

Thank you for your business!

PMT TERMS:

NET 30 DAYS PAYMENT IS DUE UPON PRESENTATION OF PROJECT INVOICE. THE CUSTOMER AGREES TO PAY AN ADDITIONAL $100 PER MONTH AFTER 30 DAYS AS WELL AS COSTS FOR LIENS & ATTORNEY'S FEES INCURRED AS A RESULT OF TAKING LEGAL ACTION FOR FOR NON-PAYMENT.

GPR TERMS:

GROUND PENETRATING RADAR IS A GEOPHYSICAL MAPPING TECHNIQUE. SCANTEK GPR, LLC. CANNOT GUARANTEE WE WILL BE ABLE TO LOCATE ALL UTILITIES ON SITE. IN THE EVENT OUR INTERPRETATION IS INACCURATE, WE DO NOT ACCEPT LIABILITY FOR, AND YOU AGREE TO RELEASE US FROM, ALLEGED NEGLIGENCE AND/OR DAMAGES. SCANTEK GPR, LLC. IS NOT A UTILITY LOCATING COMPANY. THE DECISION TO PROCEED WITH CUTTING, DRILLING, BORING OR EXCAVATION IS LEFT ENTIRELY UP TO THE CUSTOMER.

ScanTek GPR
6511 Nova Drive #269
Davie, FL 33317
954-651-7009 Fax

JOB TICKET
13833

Date Of Work: 05/02/2024 **Order #:** 13833

Customer: Moss **Technicians:** ZACHARY ANDERSON

Job Location: FTL POLICE STATION
1300 WEST BROWARD BLVD
FTL, FL

Quantity	Work Description
1.00	Purpose of the scan was to locate a horizontal rebar within the last 2 inches of the beam running east to west , was unable to locate this item . Marked all rebar in black . Job completed.
1.00	GPR REPORT -BASIC REPORT PROVIDED -PRICE OF REPORT IS PER MOBILIZATION -ALL INFO NEEDED ON REPORT MUST BE PROVIDED TO OPERATOR PRIOR TO SCAN -ANY ADDITIONAL INFO NEEDED ON REPORT AFTER SCAN STARTED, MAY RESULT IN ADDITIONAL SCANNING/BILLING

Acknowledgement
I Agree that the work has been done to our standards and is complete.

Ground Penetrating Radar is a Geophysical Mapping technique. ScanTek GPR, LLC. cannot guarantee we will be able to locate all utilities on site. In the event our interpretation is inaccurate, we do not accept liability for, and you agree to release us from, alleged negligence and/or damages. ScanTek GPR, LLC. is not a utility locating company. The decision to proceed with cutting, drilling, boring or excavation is left entirely up to the Customer.

Payment Terms: Net 30 days payment is due upon presentation of project Invoice. The customer agrees to pay an additional $100 per month for any unpaid invoice over 30 days as well as costs for liens & attorney's fees incurred as a result of taking legal action for non-payment.

Accepted By: 

JIMMY

Electronic Copy Emailed To
Jlorenzo@mosscm.com

Hyvac
Exceeding Expectations
312 SOUTH MILITARY TRAIL
DEERFIELD BEACH, FL 33442
PHONE: (954) 427-3811
FAX: (954) 426-3762
E-MAIL: hyvac@hyvacinc.com

CHANGE PROPOSAL REQUEST

TO: Jen V. Escobar, LEED®AP BD+C
Moss
c (954) 305-2775 | f (954) 524-5677 | Email: jescobar@mosscm.com
mosscm.com

DATE 3/28/2024
Rev1 4/15/2024
PROJECT: FT. Lauderdale Police HQ

PROJ. # 1023003

CPR NO. 19R1

THE FOLLOWING IS A COST PROPOSAL AS A RESULT OF CHANGES AND MODIFICATIONS TO THE CONTRACT DOCUMENTS WHICH IMPACTS COSTS ON THE HVAC SYSTEM.

WE PROPOSE TO FURNISH ALL MATERIALS, LABOR, SERVICES AND SUPERVISION FOR THE EXECUTION OF THE MECHANICAL WORK COVERED BY THE CHANGES TO:

Costs associated with the change in the contract drawings per EOR RFI # 435. This proposal excluded: Any type of roofing, cutting, patching, painting electrical and plumbing work)

PROPOSAL LUMP SUM AMOUNT **$** **10,488**

COST BREAKDOWN IS AS FOLLOWS:

COST CODES	QTY.	DESCRIPTION	MAT. UNIT COSTS	LABOR UNITS	TOTAL MATERIAL COSTS	TOTAL LABOR COSTS	SUB CONTRACTORS COSTS
8 5905	1	K&Z Proposal # 17 R1 date 4/4/2024 (See attached)	$ -	0	$ -	-	$ 4,277
	1	IGM Insulation proposal Date 3/29/2024 (See attached)			$ -	-	$ 2,169
	1	Hyvac takeoff proposal date 3/29/2024 (attached)	$ 1,085	17	$ 1,085	17	
					$ 1,085	17	$ 6,446

	EQUIPMENT & MATERIALS COSTS		$ 1,085
	SALES TAXES		$ 76
	EQUIPMENT & MATERIALS SUB-TOTAL		$ 1,161
	LABOR COSTS		$ 807
	LABOR BURDEN		$ 335
	PROJECT SUPERVISION		$ 262
	PROJECT MANAGEMENT		$ 135
	DESIGN & ENGINEERING		$ 161
	LABOR SUB-TOTAL		$ 1,700
	TOTAL SUBCONTRACTORS		$ 6,446
	EXPENDABLE TOOLS		$ 19
	CLEAN UP		$ 43
	SAFETY		$ 34

	FREIGHT			$ -
	QUALITY ASSURANCE			$ 34
	REPRODUCTIONS			$ 28
	MATERIAL HANDLING			$ 35
	WARRANTY			$ 35
	SUB-TOTAL AMOUNT			$ 9,534
	OVERHEAD COSTS %			$ 477
	PROFIT COSTS %			$ 477
	BOND COSTS % 0			$ -
	TOTAL PROPOSAL AMOUNT			$ 10,488

THIS PROPOSAL IS FIRM FOR ACCEPTANCE WITHIN 30 DAYS. WE CANNOT PROCEED WITH THE WORK COVERED BY THE PROPOSED CHANGE UNTIL WE ARE SO DIRECTED IN WRITING APPROVING COSTS, OR UNTIL WE RECEIVE YOUR WRITTEN CHANGE AUTHORIZATION, WHICH MUST BE WITHIN THE ABOVE TIME LIMIT TO PREVENT ADDITIONAL COSTS.

THIS PROPOSAL IS BASED SOLELY ON THE USUAL COSTS ELEMENTS SUCH AS LABOR AND MATERIALS, AND DOES NOT INCLUDE ANY AMOUNTS FOR ADDITIONAL CHANGES IN THE SEQUENCE OF WORK DELAYS, DISRUPTION, RESCHEDULING, EXTENDED OVERHEAD, OVERTIME, ACCELERATION AND/OR IMPACT COSTS, AND THE RIGHT IS EXPRESSLY RESERVED TO CLAIM FOR ANY AND ALL OF THESE AND RELATED ITEMS OF COST PRIOR TO ANY FINAL SETTLEMENT OF THIS CONTRACT.

ACCEPTED BY: _____ **HYVAC, INC.** **JR _____**

DATE: _____

K&Z Duct Work, Inc.
6987 N. W. 50th Street
Miami, FL 33166
Phone: (305) 470-1217
Fax (786) 542-6751

CHANGE ORDER REQUEST

To: JOSE RODRIGUEZ
Attn: HYVAC

Date of Proposal: April 4, 2024
Proposal Request Number: 17
Project Name: Ft Lauderdale Police PG

Description of Change Order Request:

Based upon RFI#435 Response

A. Materials & Equipment Summary		Total
Rough Materials (Sheet Metal Ductwork)	$	540.85
Purchased Items	$	-
Other Items	$	-
Equipment & Rental	$	-
Shipping / Trucking / Delivery	$	150.00
Rigging	$	-
Subtotal	$	690.85
Sales Tax 7%	$	48.36
Total Materials & Equipment	$	739.21

B. Labor Summary		Total
Journeyman	$	1,915.69
Supervisor	$	75.00
Foreman	$	70.00
Shop Labor	$	576.71
Estimating	$	90.00
Project Manager	$	90.00
Drafting CAD/Shop Drawings/BIM	$	720.00
Subtotal	$	3,537.41
Total Field Labor	$	3,537.41

Cost for Shop/Field Labor and Materials:	**$**	**4,276.62**
Overhead & Profit (0%):	**$**	**-**
Total Price of Above Cost:	**$**	**4,276.62**

C. Direct Job Cost		Total
Material Handling (2% of RCO)	$	85.53
Composite Clean Up (2.67% of RCO)	$	114.19
Safety (1% of RCO)	$	42.77
Cuality Assurance (0.50% of RCO)	$	21.38
Total Direct Cost	$	199.72

Total RCO Price: $ 4,540.49

SCOPE NOTES: **Main Ductwork to be Liner. Cutting/Framing & Patching By others.**

THIS PROPOSAL IS FIRM FOR ACCEPTANCE WITHIN 30 DAYS. WE CANNOT PROCEED WITH THE WORK COVERED BY THE PROPOSED CHANGE UNTIL WE ARE SO DIRECTED IN WRITING APPROVING COSTS, OR UNTIL WE RECEIVE YOUR WRITTEN CHANGE AUTHORIZATION, WHICH MUST BE WITHIN THE ABOVE TIME LIMIT TO AVOID ADDITIONAL COSTS.

DATE

CUSTOMER REPRESENTATIVE

ACCEPTED BY:

COST BREAKDOWN IS AS FOLLOWS:

Proposal # 17
Date: April 4, 2024
Project Name: **Ft Lauderdale Police PG**

ROUGH MATERIAL

QTY.	DESCRIPTION	MAT.& FAB UNIT COSTS	TOTAL MATERIAL COSTS	LABOR FIELD/SHOP COSTS	SHOP LABOR HOURS	TOTAL SHOP COST	TOTAL LABOR FIELD HOURS	TOTAL LABOR FIELD COST
138	Lbs Of Bare Galv. Metal Duct **ADD**	$ 2.75	$ 378.35	$ 65.00	5.27	$ 342.64	12.07	$ 784.47
0	Lbs Of Bare Galv. Metal Duct **CREDIT**	$ (2.75)	$ -	$ (65.00)	0.00	$ -	0.00	$ -
130	Sqf Liner Insulation **ADD**	$ 1.25	$ 162.50	$ 65.00	3.60	$ 234.07	11.40	$ 741.23
0	Sqf Liner Insulation **CREDIT**	$ (1.05)	$ -	$ (65.00)	0.00	$ -	0.00	$ -
	Totals:		**$ 540.85**			**$ 576.71**		**$ 1,525.69**

PURCHASED ITEMS

QTY.	DESCRIPTION	MAT.& FAB UNIT COSTS	TOTAL MATERIAL COSTS	LABOR UNIT COST (SHOP&FIELD)	UNIT LABOR MAN/HOURS	TOTAL LABOR MAN/HOURS		TOTAL LABOR COSTS
	ADDS							
2	Demo for existing/Installed S/A Ductwork		$ -	$ 65.00	3	6		$ 390.00
			$ -	$ 65.00	0	0		$ -
	Totals:		**$ -**					**$ 390.00**

OTHER ITEMS

QTY.	DESCRIPTION	MAT.& FAB UNIT COSTS	TOTAL MATERIAL COSTS	LABOR UNIT COSTS		TOTAL LABOR MANHOURS		TOTAL LABOR COSTS
0	Drain Pans for FCU's	$ -	$ -					
0	Wire Mesh	$ -	$ -					
0	Cutting & Patching	$ -	$ -					
0	Nuts/Bolts	$ -	$ -					
0	Hanger Saddles	$ -	$ -					
0	Ln Ft Duct Sealer	$ -	$ -					
	Totals:		**$ -**					**$ -**

Equipment Rental/ Delivery /Reprographics/Rigging/Shop Drawings

QTY.	DESCRIPTION	MAT.& FAB UNIT COSTS	TOTAL MATERIAL COSTS	LABOR UNIT COSTS		TOTAL LABOR MANHOURS		TOTAL LABOR COSTS
	Crane & Scissor Lift Rental	$ -	$ -					
	Reprographics							
	Shipping / Trucking / Delivery			$ -				$ 150.00
	Rigging							
	Shop Drawings			$ -	$ -	0	$ -	$ 720.00
	Totals:		**$ -**					

JOB: ADD

DATE: April 4, 2024

GALVANIZED SHEETMETAL

Pc #	Width	Height	Duct Length	Fittings	Total Length	Area	COEF.	Pounds	Liner W/Waste
	FCU-3-A-3								
S/A-L	14	12	5	5	25	108	1.27	138	130.00
					0	0	1	0	0.00
					0	0	1	0	0.00
TOTAL					0	108		138	**130.00**
						SQFT		**LBS**	**Liner Waste**

RFI#435 RESPONSE

K&Z Duct Work, Inc.

6987 N. W. 50th Street
Miami, Florida 33166

Office: 305-470-1217
Fax: 786-542-6751
yuniorg@kzductwork.com

Time & Material Ticket

To: MOSS & ASSOCIATES Date: 3/28/2024

Job: FORT LAUDERDALE POLICE HEADQUARTERS

Work Description: DEMOLITION OF ALREADY INSTALLED DUCTWORK TO BE RELOCATED FROM FCU 3-A-3

Materials:

Labor:

Date	Name	Regular Hours	Over-time Hours
3/28/2024	Leovigildo Milla	2	
3/28/2024	EDUARDO	2	
3/28/2024	ROME DELGADO	2	

Comments:

Work completed on Time & Material basis.

Approved by: Jimmy T Title: Date: 3/28/2024

— Verifing Time —

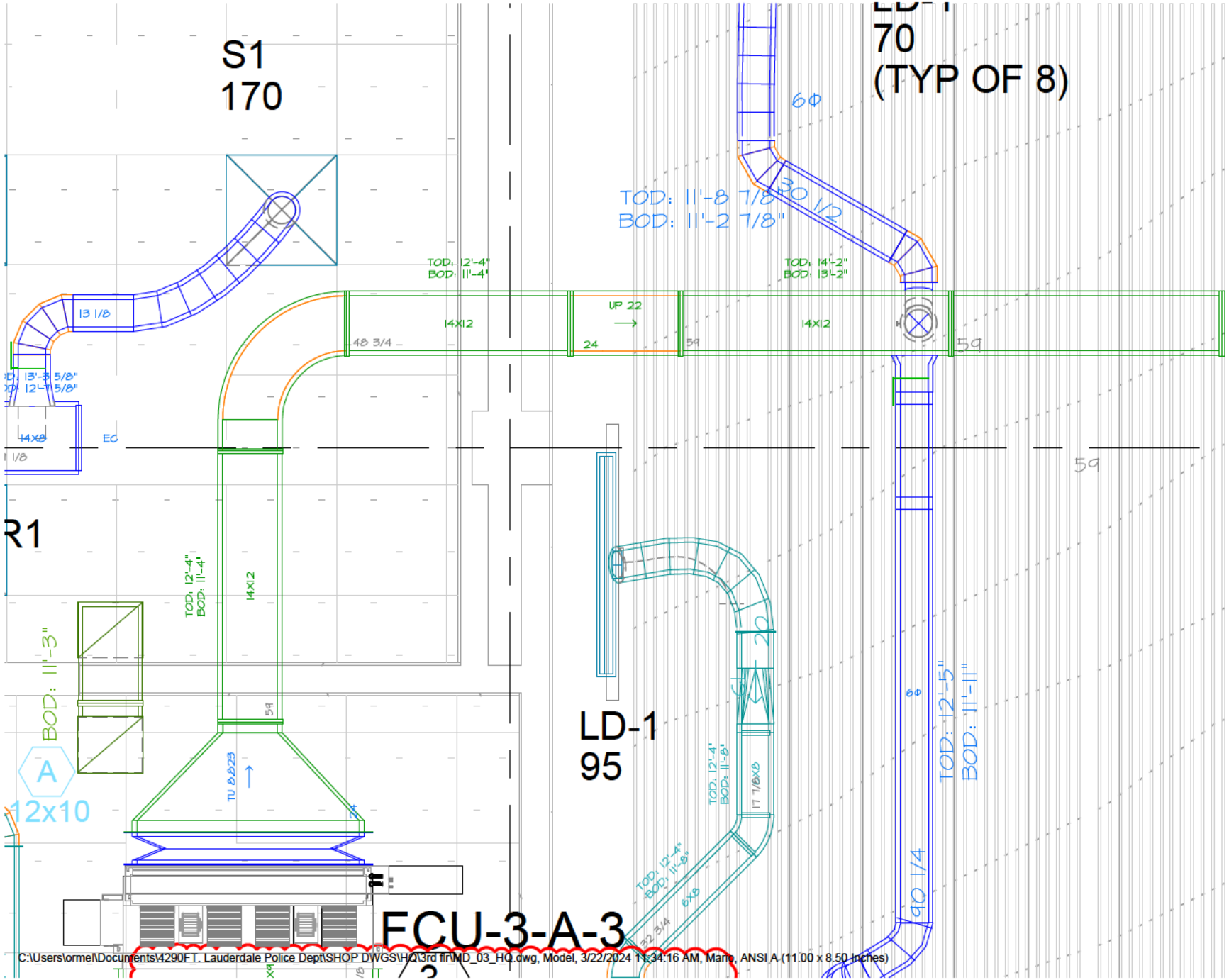
S1
170
70
(TYP OF 8)
TOD: 11'-8 7/8"
BOD: 11'-2 7/8"
TOD: 12'-4"
BOD: 11'-4"
TOD: 14'-2"
BOD: 13'-2"
UP 22
14X12
48 3/4
24
59
13 1/8
14X8
EC
R1
TOD: 12'-4"
BOD: 11'-4"
14X12
BOD: 11'-3"
A
12x10
TU 8.823
LD-1
95
TOD: 12'-4"
BOD: 11'-8"
17 7/8X8
TOD: 12'-4"
BOD: 11'-8"
6X8
32 3/4
TOD: 12'-5"
BOD: 11'-11"
90 1/4
FCU-3-A-3
C:\Users\ormel\Documents\4290FT. Lauderdale Police Dept\SHOP DWGS\HQ\3rd flr\MD_03_HQ.dwg, Model, 3/22/2024 11:34:16 AM, Mario, ANSI A (11.00 x 8.50 Inches)

170

(TYP OF 8)

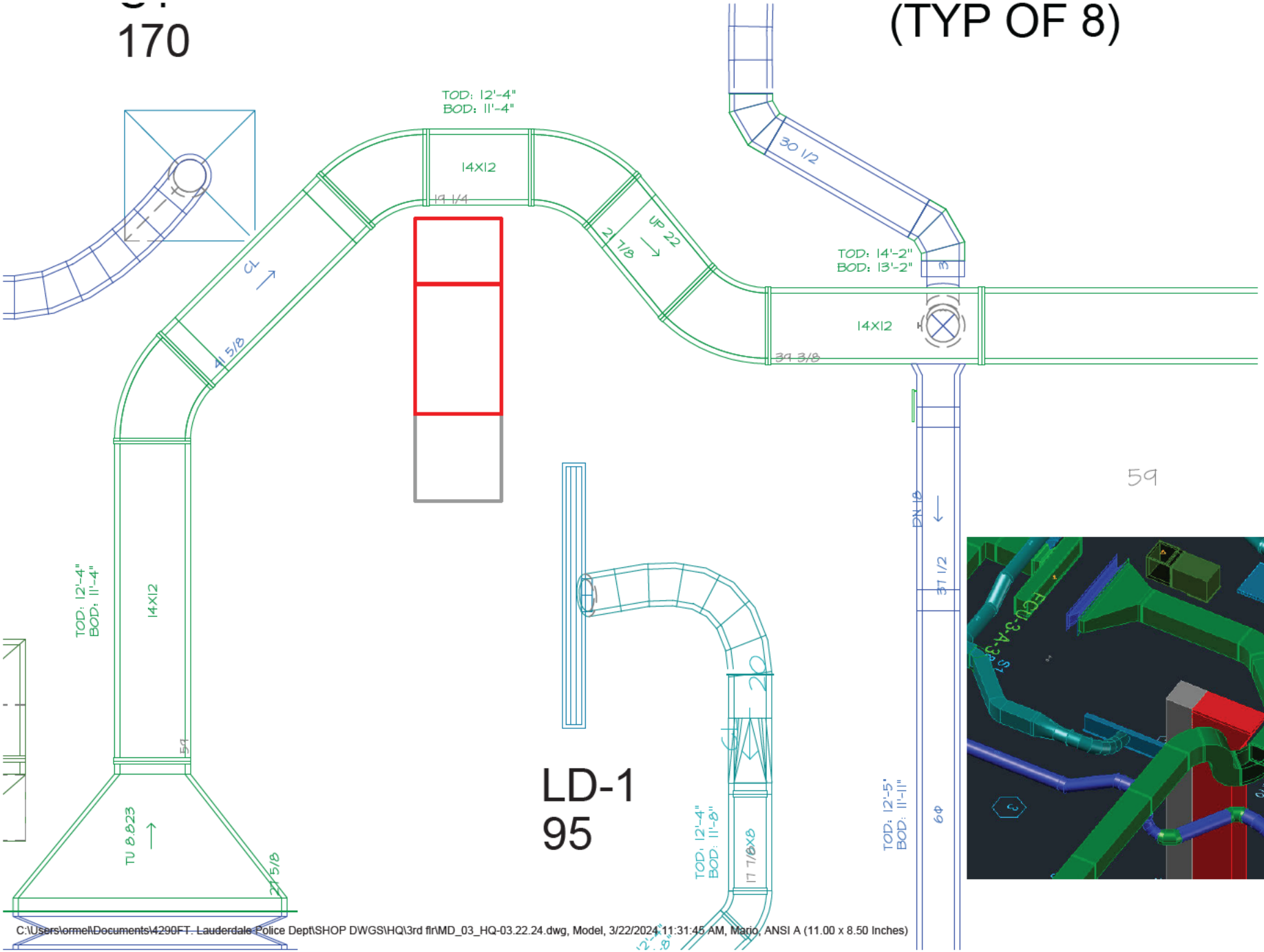

C:\Users\ormel\Documents\4290FT. Lauderdale Police Dept\SHOP DWGS\HQ\3rd flr\MD_03_HQ-03.22.24.dwg, Model, 3/22/2024 11:31:45 AM, Mario, ANSI A (11.00 x 8.50 Inches)

MOSS
SI #004
RECEIVED
11.20.23

Document Set-MECHANICAL-HQ-M2-1-10-HEADQUARTERS BLDG - HVAC DUCTWORK - FLOOR PLAN LEVEL 3 - AREA A
Project Management Initials: Designer: Designer Checked: SPS Approved: Approver ARCH D 24" x 36"

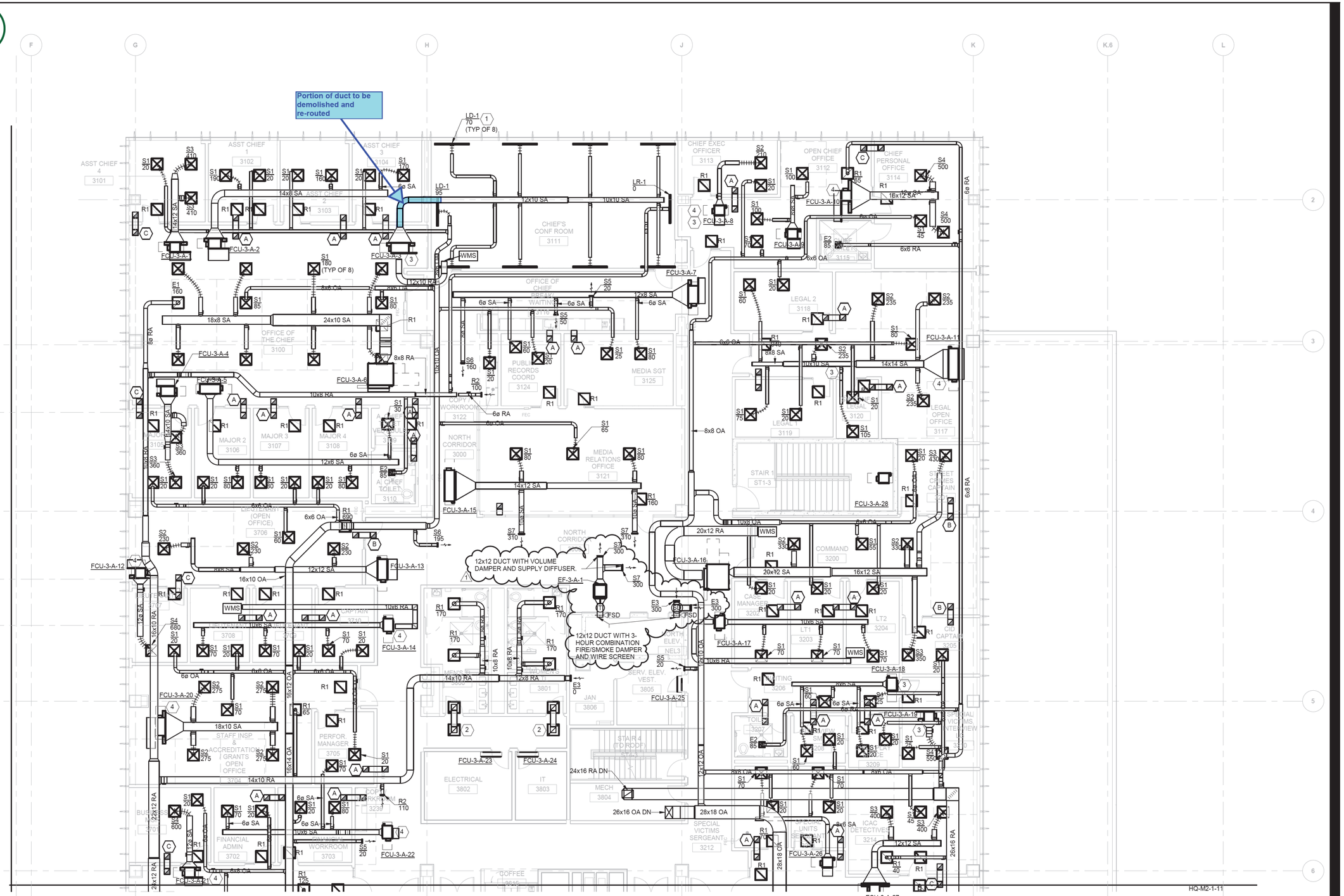

1 HQ BLDG - HVAC DUCTWORK - FLOOR PLAN LEVEL 3 - AREA A
HQ-M2-1-10 Scale: 1/8" = 1'-0"

SCALE: 1/8" = 1'-0" 0 2' 4' 8' 16' 24'

N

KEYNOTES

1 LINEAR SUPPLY DIFFUSER, TYPICAL OF 8. ACTIVE SECTIONS SHALL BE 6'-0" LONG. PROVIDE AND INSTALL INACTIVE LINEAR SLOT DIFFUSERS SO THAT A CONTINUOUS SLOT DIFUSER RUNS THE LENGTH OF THE ROOM. BALANCE ACTIVE SECTIONS TO AIRFLOW INDICATED.
2 12"x12" TRANSFER AIR DUCT. PROVIDE WITH 24"x24" EGGCRATE CEILING DIFFUSERS, TITUS 45F OR APPROVED EQUAL.
3 INSTALL DUCT SOUND LINER IN THE ENTIRE SUPPLY AND RETURN AIR DUCTS CONNECTED TO THE TERMINAL UNIT.
4 PROVIDE LITTLE GIANT VCCA-20ULS (OR APPROVED EQUAL) LOW PROFILE CONDENSATE REMOVAL PUMP. PUMP SHALL BE SECURED FROM EITHER THE SLAB ABOVE OR ATTACHED TO A NEARBY WALL. PROVIDE STAINLESS STEEL PLATE BELOW THE PUMP. SEE ELECTRICAL FOR A 120V/1PH/60 HZ CIRCUIT FOR EACH PUMP.

Last Plotted: 11/17/2023 10:27:51 AM
Filename: BIM 360:/BP-AMER (USA) 60639620-FLPH/60639620_FLPH_HQ_MECH_R20.rvt

Printed on ___% Post-Consumer Recycled Content Paper

©2016 AECOM Corporation

PLANS ARE EXEMPT FROM PUBLIC DISCLOSURE PURSUANT TO F.S. 119.071(3)(b)1

AECOM

PROJECT

FORT LAUDERDALE POLICE HEADQUARTERS

1300 W BROWARD BLVD, FT LAUDERDALE, FL 33312

CLIENT

CITY OF FORT LAUDERDALE DEPARTMENT OF PUBLIC WORKS

PRIME CONSULTANT

AECOM
2 ALHAMBRA PLAZA, SUITE 900
CORAL GABLES, FL 33134
305.444.4691 tel 305.675.3843 fax
http://www.aecom.com
ARCHITECTURE: LICENSE NO. AA26000687
ENGINEERING: CA LIC. NO. 8115

CONSULTANTS

STRUCTURAL
THORNTON TOMASETTI
101 NE THIRD AVENUE, SUITE 1170
FORT LAUDERDALE, FL 33301
954.903.9300 tel 954.903.9301 fax
www.thorntontomasetti.com/

PLUMBING & FIRE PROTECTION
HAMMOND & ASSOCIATES, INC
499 N.W. 70TH AVENUE, SUITE 201
PLANTATION, FL 33317
954.327.7111 tel 954.337.7154 fax
www.hammondengineers.com

CIVIL & TRAFFIC
KEITH
2312 S. ANDREWS AVE
FORT LAUDERDALE, FL 33316
954.788.3400 tel 000.000.0000 fax
www.keithteam.com

REGISTRATION

ANGEL A. FLORES LICENSE No. 77235 STATE OF FLORIDA PROFESSIONAL ENGINEER

THIS ITEM HAS BEEN DIGITALLY SIGNED AND SEALED BY ANGEL A. FLORES, PROFESSIONAL ENGINEER, STATE OF FLORIDA, LICENSE NO. 77235 ON THE DATE INDICATED HERE. PRINTED COPIES OF THIS DOCUMENT ARE NOT CONSIDERED SIGNED AND SEALED AND THE SIGNATURE MUST BE VERIFIED ON ANY ELECTRONIC COPIES

ISSUE/REVISION

I/R	DATE	DESCRIPTION
1	NOV 15, 2023	SI-004
	JUNE 10, 2022	PERMIT SET

KEY PLAN

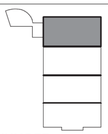

PROJECT NUMBER

60639620

SHEET TITLE

HEADQUARTERS BLDG - HVAC DUCTWORK - FLOOR PLAN LEVEL 3 - AREA A

SHEET NUMBER

HQ-M2-1-10

D'von Nottage

From: Kevin Brown <kbrown@gateprecast.com>
Sent: Thursday, April 18, 2024 9:44 AM
To: Matthew Kane
Cc: D'von Nottage; Andy McCright; Olenka Namuche; Jimmy Lorenzo; Noble Levesque
Subject: RE: 43245 FLPHQ: Replacement of Panel FLP088

CAUTION: This email originated from outside of Moss

Do not click links or open attachments unless you can confirm the sender and know the content is safe.

Be careful of any attachments or links that ask for your password.

Matt,

Here is the revised breakout from Artcrete. Formal CO coming your way.

	Unit	Rate	Cost
Labor	120	$ 85.00	$10,200.00
Supervision			$ 800.00
Boom Lift	2 Wk	$3,040.00	$ 3,040.00
Saw Cutter	Wear and Tear		$ 300.00
Diam Tooling			$ 902.00
Equipment Fuel	30 Gal	$ 3.95	$ 118.50
Total			**$15,360.50**

Notes from Artcrete's quote:

Note: The section of window installed on the end or on the start point of the cutting section have to be removed prior to ArtCrete mobilizes.

The work will take approximately 5 days with two men crew working from 7:00-5:30. A schedule will be provided once the quote is approved, and an ETA of the boom lift is determined.

Thank you,

Kevin Brown
Project Manager
810 Sawdust Trail
Kissimmee, FL 34744
941-809-9416 (Cell)
407-572-9036 (Office)

GATE PRECAST COMPANY
Check out our new website

From: Kevin Brown
Sent: Wednesday, April 17, 2024 2:00 PM

Moss & Associates, LLC
2101 N Andrews Avenue
Ft Lauderdale, FL 33311

June 10, 2024

David Lovern
City of Fort Lauderdale
100 N Andrews Ave
Ft. Lauderdale, FL 33301

RE: Potential Change Item (PCI) 0138 Notification
Fort Lauderdale Police Headquarters - B372302

Dear David Lovern,

This letter is to provide official notification of a potential change item (PCI) as follows:

PCI Number: 0138
Date: June 10, 2024
Description: Temporary Shoring of North Cantilever Beams
Days Requested:
Reason: Owner Directive - External
Scope Description: Cost associated with temporary shoring of the north side cantilever beams as directed by City of Fort Lauderdale via email on 6/3/24. Cost includes installation, dismantlement, engineering, inspections, and material rental for (1) month. Cost is based on engineered shoring drawings from RC Group dated 6/7/24. Additional cost for rental if temporary shoring to be in place for longer than (1) month to be reconciled via separate PCI.

This PCI is comprised of the following items:

Temporary Shoring of North Cantilever Beams	$ 92,430.00
01 Construction Contingency 2%	$ 1,849.00
02 Subcontract Default Insurance 1.25%	$ 1,178.00
03 Moss Insurance 1.75%	$ 1,670.00
04 Bond 1%	$ 971.00
05 Fee 4%	$ 3,924.00
Grand Total	$102,022.00

Per the terms and conditions of our contract, we have attached the appropriate back up documentation to substantiate the above referenced costs. This request only includes the items specifically identified in this change proposal. All other costs associated with this project shall be submitted under a separate change order cover.

We respectfully reserve our rights to request additional time should it become evident that this work will impact the overall completion of the project. The costs associated with this PCI will remain valid for fourteen (14) calendar days after submission.

Please indicate your formal approval for this additional work and cost by signing in the space provided below. Moss & Associates will then incorporate this change into the next Owner Change Order (OCO).

If you should have any questions, please contact the undersigned at 954-326-2727 as soon as possible.

Sincerely, **Moss & Associates, LLC** Date: 6/10/24 Matthew Kane Project Manager	Reviewed / Approved by: **City of Fort Lauderdale** **Approved:** _____ **Date:**_____ **(Owner)**

TEKTON CONSTRUCTION
9495 Sunset Dr. Suite B-180, Miami, FL 33173
P:(305) 631-2578 F:(786) 615-5741

PCO #014

PROPOSAL

Issue Date:	June 3, 2024
Project:	Fort Lauderdale Police Headquarters & Parking Garage
Project #:	126
Architect:	AECOM
Engineer:	Thornton Tomasetti
GC:	Moss & Associates
Ref:	Shoring North Deflection Beam

Description of Work: This proposal is for all additional costs associated with providing Labor and material to shore the underside of L3 structural Beam and L3 to main room beam on the Northside only. Moss has authorized Tekton to commence the work per City of Fort Lauderdale request. Please see next page for a complete breakdown of labor and material costs.

SUMMARY COST		
Item #	**Scope Description**	**Total Cost ($)**
	Police Headquarters Deflection Slab / Beam- Shoring Installation	$92,429.62
	Total	**$92,430**

Taxes (7%) ***for material only***	$	979.58
Sub-total.	$	80,373.58
Overhead & Profit	$	12,056.04
Total	**$**	**92,430**

Notes:

1	*Tekton Construction disclaims to the fullest extent authorized by law all warranties, whether expressed or implied, for the scope of work stated above.*
2	*This PCO is based on the Material and Labor required to shore the North Deflection Beam only. Any alternates required by the city and/or engineer may have additional costs associated with it.*

Disclaimer: *Tekton Construction reserves it's right to future claims in the event that is has omitted any work in relation to this proposal.*

Thank you,

Sean Aleman
900 SW 70th Avenue
Miami, Florida 33134
P:305-631-2578 F:786-615-5741

TEKTON CONSTRUCTION
9495 Sunset Dr. Suite B-180, Miami, FL 33173
P:(305) 631-2578 F:(786) 615-5741

PCO #014 - Shoring North Deflection Beam

Description	$ / Unit	Quantity	UOM	Price
Scope Description				
POLICE HEADQUARTERS				
Shoring Installation / Dismantlement Labor for Ground to Underside of L3 Beam Only				
Shoring Installation *(4-men x 10-hrs x 5-days)* Apprentices	$ 45.00	200.00	hrs	$ 9,000.00
Shoring installation *(4-men x 10-hrs x 5-days) C*arpenters	$ 65.00	200.00	hrs	$ 13,000.00
Shoring Dismantlement *(4-men x 10-hrs x 5-days)* Apprentices	$ 45.00	200.00	hrs	$ 9,000.00
Shoring Dismantlement *(4-men x 10-hrs x 5-days) C*arpenters	$ 65.00	200.00	hrs	$ 13,000.00
Brace back to building and cut 4x4's to Underside of L3 slab / Beam				
Carpenter - Cut 4x4 Material (2-men x 10-hrs x 1-day)	$ 45.00	20.00	hrs	$ 900.00
Apprentice - Install 4x4 Material (2-men x 10-hrs x 1-day)	$ 65.00	20.00	hrs	$ 1,300.00
Post Shoring Installation / Dismantlement Labor for L3 to Underside of Roof Beam Only				
Post Shoring Installment (3-men x 10-hrs x 1-day) Apprentices	$ 45.00	30.00	hrs	$ 1,350.00
Post Shoring Dismantlement (3-men x 10-hrs x 1-day) Apprentices	$ 45.00	30.00	hrs	$ 1,350.00
Supervision *(for all the work stated above)*	$ 130.00	100.00	hrs	$ 13,000.00
Shoring Euipment / Assecories Rental				
550 Post Shore	$ 8.00	100.00	ea	$ 800.00
4'W x 6' H SW Frame	$ 7.00	320.00	ea	$ 2,240.00
6'-6" Xbrace Blue	$ 3.00	320.00	ea	$ 960.00
Meter Screw Jack Assemble	$ 4.50	128.00	ea	$ 576.00
MSJ w/Uhead ASSY 8x8	$ 4.50	128.00	ea	$ 576.00
Coupling Pin	$ 0.50	512.00	ea	$ 256.00
7' Alum Stringers	$ 2.00	448.00	LF	$ 896.00
16' Alum Joist	$ 2.00	992.00	LF	$ 1,984.00
Mudsils (2'-0"x 2'-0")	$ 25.00	128.00	ea	$ 3,200.00
4x4x16's yel pine	$ 17.50	60.00	bundle	$ 1,050.00
2x4x16' yel pine (*for locking scaffold*)	$ 7.00	208.00	bundle	$ 1,456.00
RC Group Engineering (Shop Drawing)	$ 3,000.00	1.00	fee	$ 3,000.00
RC Group Engineer Inspections	$ 500.00	1.00	fee	$ 500.00
Taxes (7%) *(For Materials Only)*				$ 979.58
Sub-Total				$ 80,373.58
O.H. & Profit (15%)				$ 12,056.04
GRAND TOTAL				**$ 92,429.62**

Matthew Kane

From: David Lovern <DLovern@fortlauderdale.gov>
Sent: Monday, June 3, 2024 3:58 PM
To: Christopher Andrisani; D'von Nottage; Matthew Kane; Andy McCright
Cc: Robert Buscemi; Adam Solomon (FLPD); Anthony Fajardo; William Kraemer; John Travers; Luis Hernandez; Pravin Nanayakkara; Lakdas Nanayakkara
Subject: RE: FLPH - Roof Deck Findings Report
Attachments: FLPH Roof Deck Full Evaluation Report.pdf; Roof Deck Strength Chart.pdf

CAUTION: This email originated from outside of Moss
Do not click links or open attachments unless you can confirm the sender and know the content is safe.
Be careful of any attachments or links that ask for your password.

Chris / D'von,

Per the Roof Deck Evaluation report furnished on Friday by LY Engineering, please accept this email as a directive to implement the recommended temporary shoring as stated on page 7 of the report.

The next course of action will be determined upon review and approval by the building department.

Respectfully,

David Lovern
Senior Project Manager
954.828.6235 Office
305.491.1436 Direct
City of Fort Lauderdale, Florida

From: Anthony Fajardo <AFajardo@fortlauderdale.gov>
Sent: Monday, June 3, 2024 10:04 AM
To: David Lovern <DLovern@fortlauderdale.gov>; William Kraemer <WKraemer@fortlauderdale.gov>; John Travers <JTravers@fortlauderdale.gov>; Luis Hernandez <LHernandez@fortlauderdale.gov>
Cc: Robert Buscemi <RBuscemi@fortlauderdale.gov>; Adam Solomon (FLPD) <ASolomon@flpd.gov>
Subject: RE: FLPH - Roof Deck Findings Report

David,

Please confirm that Moss is working on the temp shoring that is recommended on page 7 as you referenced last week.

Thanks,

Anthony Greg Fajardo | Assistant City Manager
101 NE 3rd Ave, Suite 2100 | Fort Lauderdale FL 33301
City of Fort Lauderdale
P: (954) 828-5758 | E: afajardo@fortlauderdale.gov

CITY OF FORT LAUDERDALE

Under Florida law, most e-mail messages to or from City of Fort Lauderdale employees or officials are public records and may be subject to public disclosure. Please consider the environment before printing.

CODES:

1. FLORIDA BUILDING CODE, FBC 2023, 8TH EDITION.
2. AMERICAN CONCRETE INSTITUTE "BUILDING CODE REQUIREMENTS FOR STRUCTURAL CONCRETE" ACI 318–19 ("ACI").
3. AMERICAN FOREST AND PAPER ASSOCIATION "NATIONAL DESIGN SPECIFICATION FOR WOOD CONSTRUCTION", NDS–20 ("AF & PA").
4. AMERICAN CONCRETE INSTITUTE "BUILDING CODE REQUIREMENTS FOR MASONRY STRUCTURES" ACI 530–13 ("ACI 530").
5. AMERICAN CONCRETE INSTITUTE "GUIDE FOR SHORING/ RE–SHORING OF CONCRETE MULTISTORY BUILDINGS" ACI 347.2R–05.
6. AMERICAN SOCIETY OF CIVIL ENGINEERS "MINIMUM DESIGN LOADS FOR BUILDINGS AND OTHER STRUCTURES" ASCE 7–22
7. AMERICAN INSTITUTE OF STEEL CONSTRUCTION AISC 2017

GENERAL NOTES

THESE DRAWINGS SHOW THE APPLICATION OF SHORING PRODUCTS TO THIS SPECIFIC PROJECT, BUILDING OR STRUCTURE AND ARE BASED ON INFORMATION CONTAINED IN PROJECT CON–STRUCTION DRAWINGS SUPPLIED TO RC GROUP LLC BY THE CUSTOMER. THESE DRAWINGS DO NOT SHOW ALL SPECIFIC CONSTRUCTION SITE DETAILS. ENGINEERING SPECIFIC ON–SITE DESIGN DETAILS UNIQUE TO THIS APPLICATION ARE THE RESPONSIBILITY OF THE CUSTOMER.

1. ALL DIMENSIONS AND DETAILS SHOWN ON THIS LAYOUT MUST BE CHECKED AND VERIFIED BY THE CONTRACTOR BEFORE PROCEEDING WITH ANY WORK.
2. CONCRETE TO BE SUPPORTED BY THE SHORING SHOWN ON THIS LAYOUT IS ASSUMED TO WEIGH 150 PER CUBIC FOOT. 1st FLOOR SLAB 150 PER CUBIC FOOT. W/DROP PANELS
3. THE DESIGN OF THIS LAYOUT INCLUDES A LIVE LOAD (INCLUDING FORMS) OF 50 LBS. PER SQ. FT. WHICH DOES NOT INCLUDE PROVISIONS FOR MOTORIZED CONCRETE EQUIPMENT.
4. THE APPROXIMATE AMOUNT OF SCREW JACK EXTENSIONS HAVE BEEN SHOWN. THESE EXTENSIONS MAY HAVE TO BE ADJUSTED DUE TO FIELD CONDITIONS. HOWEVER, THE MAXIMUM SCREW JACK EXTENSION FOR THIS LAYOUT IS LIMITED TO 12 INCHES TOP AND 12 INCHES BOTTOM.
5. SUITABLE SILLS MUST BE PROVIDED TO PROPERLY DISTRIBUTE THE IMPOSED SHORING LOADS OVER THE GROUND OR SUPPORTING FOUNDATION TO ASSURE ADEQUATE STABILITY FOR ALL SHORING LEGS.
6. ALL STRINGERS, LEDGERS OR OTHER MEMBERS RESTING ON EQUIPMENT MUST BE CENTERED DIRECTLY OVER THE SHORING LEGS.
7. IN SETTING ELEVATIONS, ALLOW FOR COMPRESSION OF LUMBER.
8. THE FORMWORK DETAILS SHOWN ARE MERELY SUGGESTED SIZES AND ARE BASED ON THE FOLLOWING UNIT STRESSES:

   EXTREME FIBER STRESS IN BENDING 1250 PSI
   HORIZONTAL SHEAR 175 PSI

THE ABOVE STRESSES ARE FOR THE FOLLOWING GRADES OF LUMBER: No. 2 SOUTHERN PINE OR BETTER

IN THE DESIGN OF THIS PROJECT, THE ABOVE ALLOWABLE STRESSES HAVE BEEN INCREASED 25% (EXCEPT FOR MODULUS OF ELASTICITY) FOR SHORT DURATION LOADING CONDITIONS IN ACCORDANCE WITH NATIONAL FOREST PRODUCTS ASSOCIATION'S "NATIONAL DESIGN SPECIFICATION" FOR WOOD CONSTRUCTION –NDS 2005 EDITION TABLE 2.3.2 ALL WOOD MEMBERS SHALL BE CONTINUOUS OVER TWO SUPPORTS MINIMUM.

THE LUMBER PROPERTIES USED FOR THIS LAYOUT ARE BASED ON SOUTHERN PINE LUMBER.

9. PLYWOOD DESIGN IS BASED ON AMERICAN PLYWOOD ASSOCIATION'S TECHNICAL DATA HANDBOOK WITH THE FACE GRAIN OF THE PLYWOOD RUNNING AT RIGHT ANGLES TO ITS SUPPORT. EXTREME FIBER STRESS IN BENDING 1, 190 PSI HORIZONTAL SHEAR 155 PSI STRUCTURAL GRADE 1 (APA)
10. THE SHORING SYSTEM, AS SHOWN, IS DE–SIGNED ON THE ASSUMPTION THAT THE FORMWORK WILL BE RESTRAINED FROM LATERAL MOVEMENT BY THE CONTRACTOR. SUFFICIENT LATERAL SUPPORTS MUST BE PROVIDED WHERE NECESSARY TO PREVENT THE IMPOSITION OF LATERAL LOADS ON THE SHORING SYSTEM.
11. THE SHORING EQUIPMENT DEPICTED ON THIS AND THE ATTACHED DRAWINGS MUST BE ERECTED SO AS TO CONFORM TO ALL CURRENT RC GROUP LLC "SAFETY GUIDELINES" AND TO ALL FEDERAL, STATE AND LOCAL REGULATIONS.
12. ALL STEEL BEAM LEDGERS OR STRINGERS MUST BE SECURED TO U–HEADS BY ONE (1) JUNIOR BEAM CLAMP PER U–HEAD ON ALTERNATE SIDES (SEE DETAIL "A" ON THIS DRAWING). ALL ALUMINUM BEAM LEDGERS OR STRINGERS MUST BE SECURED TO U–HEADS BY ONE (1) ALUMINUM BEAM CLAMP
13. AT THE TIME THE LEDGER OR STRINGER IS PLACED IN THE U–HEAD, IT MUST BE IMMEDIATELY SECURED TO THE U–HEAD, WOOD LEDGERS OR STRINGERS ARE NAILED DIRECTLY TO THE U–HEAD (PREVIOUS NOTE FOR SECURING STEEL OR ALUMINUM BEAM LEDGERS OR STRINGERS).
14. ALL LOWER FRAMES OF A TOWER MUST BE PLUMB AND LEVEL BEFORE ERECTING THE REMAINDER OF THE TOWER.
15. THE RESHORING IS THE RESPONSIBILITY OF THE CONTRACTOR AND SHOULD BE THOROUGHLY CHECKED BY THE ARCHITECT/ENGINEER TO DETERMINE THAT IT IS PROPERLY PLACED AND THAT IT HAS THE LOAD CAPACITY TO SUPPORT THE AREAS THAT ARE BEING RESHORED.

TOWER LEG LOADING SHOULD BE AS UNIFORMLY DISTRIBUTED AS POSSIBLE. NEVER LOAD ONLY ONE LEG OF A FRAME OR ONE FRAME OF A TOWER.

17. ALL DRAWINGS THAT INCORPORATE HORIZONTAL SHORING BEAMS OTHER THAN SHORING COMPANY'S MUST BE INSTALLED ACCORDING TO THE MANUFAC–TURER'S ERECTION INSTRUCTIONS. THERE– FORE, THIS LAYOUT IS FOR ILLUSTRATIVE PURPOSES ONLY AND SHOULD BE CHECKED BY THE MANUFACTURER AND/OR SUPPLIER FOR CONFORMANCE WITH THEIR SPECIFICATIONS.
18. WHEN TOWERS ARE DIAGONALLY BRACED TO GRADE OR SOME OTHER POINT, BY GUYING OR OTHER MEANS, THE VERTICAL COMPONENT OF THE DIAGONAL LOAD MUST BE INCLUDED IN THE ALLOWABLE TOWER LEG LOAD.
19. DO NOT CLIMB ON LACING AND BRACING.
20. EACH POST SHORE ROW SHALL BE ADEQUATELY BRACED FOR STABILITY. DIAGONAL BRACES SHALL BE PROVIDED AT ENDS OF POST SHORE RUNS AND AT INTERVALS NOT EXCEEDING 50 FEET. BRACING SHALL BE INSTALLED AS THE POST SHORES ARE BEING ERECTED. ADDITIONAL BRACING MAY BE NECESSARY FOR UNUSUAL OR SPECIAL CONDITIONS.
21. SHORE FRAMES AND COMPONENTS WERE DESIGNED AS AN INTERVAL SYSTEM AND SHALL NOT BE INTERMIXED WITH OTHER MANUFACTURERS COMPONENTS.

SAFETY GUIDELINES:

SHORING FOR CONCRETE FORMWORK SHORING SAFETY IS EVERYONE'S RESPONSIBILITY!

EVERYONE'S SAFETY DEPENDS UPON THE PROPER ERECTION AND SAFE USE OF SHORING.
INSPECT YOUR SHORING BEFORE EACH USE TO SEE THAT THE ASSEMBLY HAS NOT BEEN ALTERED AND IS SAFE FOR YOUR USE.

POST THESE SHORING SAFETY RULES IN A CONSPICUOUS PLACE AND BE SURE THAT ALL PERSONS WHO ERECT, USE, OR DISMANTLE SHORING ARE AWARE OF THEM.

FOLLOW ALL STATE, LOCAL AND FEDERAL CODES, ORDINANCES AND REGULATIONS PERTAINING TO SHORING.

INSPECT ALL EQUIPMENT BEFORE USING. NEVER USE ANY EQUIPMENT THAT IS DAMAGED, SEVERELY RUSTED, OR IS MISSING LOCKING DEVICES. ANY COMPONENT WHICH CANNOT BE BROUGHT INTO PROPER ALIGNMENT OR CONTACT WITH THE COMPONENT INTO OR ONTO WHICH IT IS INTENDED TO FIT SHALL BE REMOVED AND REPLACED.

A SHORTING LAYOUT SHALL BE AVAILABLE AND USED ON THE JOB SITE AT ALL TIMES.

INSPECT ERECTED SHORING AND FORMING FOR CONFORMITY WITH LAYOUT AND SAFETY PRACTICES PRIOR TO POUR, DURING POUR, AND AFTER POUR UNTIL CONCRETE IS SET.

CONSULT YOUR SHORING COMPANY REPRESENTATIVE WHEN IN DOUBT. SHORING IS OUR BUSINESS. NEVER TAKE CHANCES.

!WARNING!
SERIOUS INJURY OR DEATH CAN RESULT FROM YOUR FAILURE TO FAMILIARIZE YOURSELF AND COMPLY WITH ALL APPLICABLE SAFETY REQUIREMENTS OF FEDERAL, STATE AND LOCAL REGULATIONS. UNDERSTAND THESE SAFETY GUIDELINES BEFORE ERECTING, USING, OR DISMANTLING THIS SHORING.

!.PRIOR TO THE POUR

A. GENERAL

1. USE SHORING COMPANY'S RECOMMENDED SAFE WORKING LOADS AND PROCEDURES FOR:
   A. SPAN, SPACING AND TYPES OF SHORING MEMBERS.
   B. TYPES, SIZES, HEIGHTS AND SPACING OF VERTICAL SHORING SUPPORTS.
2. USE LUMBER EQUIVALENT TO THE STRESS, SPECIES, GRAD AND SIZE SPECIFIED ON THE LAYOUT. USE ON LUMBER THAT IS IN GOOD CONDITION. DO NOT SPLICE TIMBER MEMBERS BETWEEN THEIR SUPPORTS.
3. PROVIDE PROPER FOUNDATION (SILLS, BEAMS, OR CRIBBING) BELOW BASE PLATES FOR THE DISTRIBUTION OF LET LOADS TO CONCRETE SLABS OR GROUND. EXISTING GROUND SHALL BE LEVEL AND THOROUGHLY COMPACT PRIOR TO ERECTION OF SHORING TO PREVENT SETTLEMENT. CONSIDERATION MUST BE GIVEN TO POTENTIAL ADVERSE WEATHER CONDITIONS THROUGHOUT THE POUR CYCLE SUCH AS WASHOUTS, FREEZING AND THAWING OF GROUND, ETC. CONSULT A QUALIFIED SOILS ENGINEER TO DETERMINE THE PROPER SIZE FOUNDATION REQUIRED FOR EXISTING GROUND CONDITIONS.
4. DO NOT MAKE UNAUTHORIZED CHANGES OR SUBSTITUTION OF EQUIPMENT; ALWAYS CONSULT YOUR SHORING COMPANY SUPPLIER PRIOR TO MAKING CHANGES NECESSITATED BY JOB SITE CONDITIONS.
5. PROVIDE GUARDRAIL SYSTEMS ON ALL OPEN SIDES AND OPENINGS IN FORMWORK AND SLABS.
6. ACCESS MUST BE PROVIDED TO ALL FORMING DECK LEVELS. IF IT IS NOT AVAILABLE FROM THE STRUCTURE, ACCESS LADDERS OR STAIR TOWERS MUST BE PROVIDED. ACCESS LADDERS MUST EXTEND AT LEAST THREE (3) FEET ABOVE FORMWORK.

!WARNING!

FALL ARREST EQUIPMENT ATTACHED TO SHORING MAY NOT PREVENT SERIOUS INJURY OR DEATH IF FALL OCCURS.

7. IF MOTORIZED CONCRETE PLACEMENT EQUIPMENT IS TO BE USED, BE SURE THAT LATERAL LOADS, VIBRATION, AND OTHER FORCES HAVE BEEN CONSIDERED AND ADEQUATE PRECAUTIONS TAKEN TO ASSURE STABILITY.
8. PLAN CONCRETE POURING METHODS AND SEQUENCES TO INSURE AGAINST UNBALANCED LOADING OF THE SHORING EQUIPMENT. TAKE ALL NECESSARY PRECAUTIONS TO AVOID UPLIFT OF SHORING COMPONENTS AND FORMWORK.
9. FASTEN ALL BRACES SECURELY.
10. CHECK TO SEE THAT ALL CLAMPS, SCREWS, PINS AND ALL OTHER COMPONENTS ARE IN A CLOSED OR ENGAGED POSITION.
11. MAKE CERTAIN THAT ALL BASE PLATES AND SHORE HEADS ARE IN FIRM CONTACT WITH THE FOUNDATION AND FORMING MATERIAL.
12. USE SPECIAL PRECAUTIONS WHEN SHORING TO OR FROM SLOPED SURFACES.
13. AVOID ECCENTRIC LOADS ON U–HEADS AND TOP PLACES BY CENTERING STRINGERS ON THESE MEMBERS.
14. AVOID SHOCK OR IMPACT LOADS FOR WHICH THE SHORING WAS NOT DESIGNED.
15. DO NOT PLACE ADDITIONAL TEMPORARY LOADS (SUCH AS REBAR BUNDLES) ON ERECTED FORMWORK OR POURED SLABS, WITHOUT CHECKING THE CAPACITY OF THE SHORING AND/OR STRUCTURE TO SAFELY SUPPORT SUCH ADDITIONAL LOADS.
16. THE COMPLETED SHORING SETUP SHALL HAVE THE SPECIFIED BRACING TO GIVE IT LATERAL STABILITY.
17. THE ERECTION OF SHORING SHOULD BE UNDER THE SUPERVISION OF AN EXPERIENCED AND COMPETENT PERSON.

B. FRAME SHORING

1. FOLLOW THE SHORING LAYOUT DRAWING AND DO NOT OMIT REQUIRED COMPONENTS.
2. DO NOT EXCEED THE SHORE FRAME SPACINGS OR TOWER HEIGHTS AS SHOWN ON THE SHORING LAYOUT.
3. SHORING LOAD MUST BE CARRIED ON ALL LEGS.
4. PLUMB AND LEVEL ALL SHORING FRAMES AS THE ERECTION PROCEEDS, AND CHECK PLUMB AND LEVEL OF SHORING TOWERS JUST PRIOR TO POURING.
5. DO NOT FORCE BRACES ON FRAMES TO FIT LEVEL THE SHORING TOWERS UNTIL PROPER FIT CAN BE MADE EASILY.
6. TIE HIGH TOWERS OF SHORING FRAMES TOGETHER WITH SUFFICIENT BRACES TO MAKE A RIGID, SOLID UNIT (CONSULT YOUR SHORING COMPANY REPRESENTATIVE FOR RECOMMEDATIONS). SHORING MUST ALWAYS BE SECURED WHEN THE HEIGHT OF THE SHORING TOWERS EXCEED FOUR (4) TIMES THE MINIMUM BASEWIDTH. SEE NOTE 1.
7. EXERCISE CAUTION IN ERECTING OR DISMANTELING FREE STANDING SHORING TOWERS TO PREVENT TIPPING.
8. DO NOT CLIMB CROSS BRACES.

C. SCREW JACKS

1. USE SCREW JACKS TO ADJUST FOR UNEVEN GRADE CONDITIONS, TO LEVEL AND ACCURATELY POSITION THE FALSEWORK AND FOR EASY STRIPPING.
2. DO NOT EXCEED SHORING COMPANY'S RECOMMENDED MAXIMUM EXTENSION OF SCREW JACKS. KEEP SCREW JACK EXETENSIONS TO A MINIMUM FOR MAXIMUM LOAD CARRYING CAPACITY.
3. MAKE CERTAIN THAT ALL SCREW JACKS ARE FIRMLY IN CONTACT WITH THE FOUNDATION AND FRAME LEGS.

D. POST SHORING

1. PLUMB ALL POST SHORES THE THE ERECTION PROCEEDS. CHECK PLUMB OF POST SHORES JUST PRIOR TO POUR.
2. POST SHORES MAY REQUIRE ADDITIONAL STABILITY BRACING. REFER TO MANUFACTURE'S INSTRUCTION. REQUIRED BRACING SHALL BE INSTALLED AS THE SHORE ARE BEING ERECTED.
3. DEVICES WHICH ATTACH THE EXTERNAL LATERAL STABILITY BRACING SHALL BE SECURELY FASTENED TO EACH POST SHORE.
4. POST SHORES MORE THAN ONE THIER HIGH SHOULD NOT BE USED. WHERE GREATER SHORE HEIGHTS ARE REQUIRED CONSULT YOUR SHORING COMPANY SUPPLIER.

E. HORIZONTAL SHORING

1. SPECIAL CONSIDERATION MUST BE GIVEN TO THE INSTALLATION OF HORIZONTAL SHORING;
   A. WHEN SLOPED OR SUPPORTED BY SLOPING LEDGERS (STRINGERS).
   B. WHEN LEDGER (STRINGER) HEIGHT/WIDTH RATIO EXCEEDS 2.5 TO 1.
   C. WHEN ECCENTRIC LOADING CONDITIONS EXIST.
   D. WHEN LEDGER (STRINGER) CONSISTS OF MULTIPLE MEMBERS (I.E., DOUBLE 2x6, 2x8, ETC.)
   E. WHEN HORIZONTAL SHORES ARE PLACED OTHER THAN AT RIGHT ANGLES TO THEIR SUPPORTS.
2. ASSURE THAT BEARING ENDS OF SHORING BEAMS ARE PROPERLY SUPPORTED AND THAT LOCKING DEVICES ARE PROPERLY ENGAGED BEFORE PLACING ANY LOADS ON BEAMS.
3. HORIZONTAL SHORING BEAMS SHOULD NOT BE SUPPORTED OTHER THAN AT THE BEARING PRONGS UNLESS RECOMMENDED BY YOUR SHORING COMPANY SUPPLIER. CANTILEVER "MALE END" OF SHORING COMPANY HORIZONTAL BEAMS ONLY. CANTILEVER SHALL NOT EXCEED 24".
4. DO NOT NAIL BEAM BEARING ENDS TO LEDGER.
5. PROVIDE AND MAINTAIN ADEQUATE SUPPORT TO PROPERLY DISTRIBUTE SHORING LOADS. WHEN SUPPORTING HORIZONTAL SHORING BEAMS ON:
   A. MASONRY WALL – INSURE THAT MASONRY UNITS HAVE ADEQUATE STRENGTH. BRACE WALLS AS NECESSARY.
   B. LEDGERS – SUPPORTED BY WALLS USING BOLTS, OR OTHER MEANS, SHOULD BE PROPERLY DESIGNED AN INSTALLED PER RECOMMENDATION OF SUPPLIER OR JOB ARCHITECT/ENGINEER.
   C. FORMWORK – SHORING BEAMS SHOULD BE DESIGNED FOR THE ADDITIONAL LOADS IMPOSED BY THE FORMWORK.
   D. STRUCTURAL STEEL FRAMEWORK – THE ABILITY OF THE STEEL TO SUPPORT ALL LOADING SHOULD BE CHECKED AND APPROVED BY THE RESPONSIBLE PROJECT ARCHITECT/ENGINEER.
   E. STEEL HANGERS – BE SURE THE BEARING ENDS FULLY ENGAGE ON THE HANGERS. THE HANGERS SHALL BE DESIGNED TO CONFORM TO THE BEARING END AND SHALL HAVE A RATED STRENGTH TO SAFELY SUPPORT THE SHORING LOADS IMPOSED. HANGERS MUST BE PLATE SADDLE RATHER THAN WIRE TYPE. CHECK WITH MANUFACTURER OF HANGERS FOR SPECIFIC APPLICATION. (FOLLOW HANGER MANUFACTURE'S RECOMMENDATIONS)

A. FINAL INSPECTION

BE SURE THAT:

1. THERE IS SOUND FOUNDATION UNDER EVERY LEG.
2. ALL BASE PLATES AND SCREW JACKS ARE IN FIRM CONTACT WITH FOUNDATION.
3. EVERY COMPONENT (INCLUDING EXTERIOR BRACING) AGREES WITH THE SHORING LAYOUTS AS TO TYPE, SPAN, NUMBER, LOCATION AND SIZE.
4. ALL SHORE PINS ARE PROPERLY INSTALLED AND FULLY SEATED.
5. ALL FRAMES ARE PLUMB AND BRACED TO FORM TOWERS AND/OR ALL POSTS ARE PLUMB AND BRACED AS REQUIRED BY USER INSTRUCTIONS.
6. ALL FORMWORK FOLLOWS FORMING LAYOUT AND HORIZONTAL BEAMS FULLY BEAR ON THEIR SUPPORTS.
7. ALL CLAMPS, SCREWS, PINS AND OTHER FASTENERS (INCLUDING LOCKING DEVICES ON ADJUSTABLE BEAMS) ARE CLOSED, TIGHTENED, OR ENGAGED.

II. DURING THE POUR

1. ADJUSTMENT OF SHORING AND/OR POST SHORES TO RAISE FORMWORK SHALL NOT BE MADE ONCE THE POUR BEGINS.
2. INSURE POUR SEQUENCE WILL NOT CAUSE AN UNBALANCED LOAD ON SHORING EQUIPMENT.
3. MONITOR POSSIBLE MOVEMENT OF SHORING COMPONENTS WHEN PLACING CONCRETE.
4. DO NOT POUR MORE THAN 6" OVER SLAB THICKNESS
5. POUR CONCRETE ONLY AT THE CENTER OF PANELS/PLYWOOD, DO NOT POUR THE CONCRETE IN ANY PANELS/PLYWOOD JOINTS OF EDGES.
6. IN HURRICANE SEASON (FROM JUNE 1 THRU 30 NOVEMEBER) IF A STORM HIT THE AREA OF WORK, RE–INSPECTIONS IS REQUIRE AT CONTRACTOR EXPENSES

!WARNING!
DO NOT POSITION WORKERS BELOW FORMWORK WHILE CONCRETE IS BEING PLACED.

III. REMOVAL

LOADED SHORING EQUIPMENT SHALL NOT BE RELEASED OR REMOVED, INCLUDING CROSS BRACES, UNTIL THE APPROVAL OF A QUALIFIED ENGINEER HAS BEEN RECEIVED. PREMATURE RELEASING OR STRIPPING OF FORMS CAN CAUSE FAILURE. A QUALIFIED ENGINEER MUST DECIDED WHEN AND HOW STRIPPING IS TO PROCEED. WEATHER CONDITIONS, VARIATIONS IN DIFFERENT PARTS OF THE STRUCTURE AN THE SETTING QUALITIES OF THE CONCRETE ALL AFFECT THE STRIPPING.

IV. RESHORING
DEFINITION: RESHORING MEANS THE CONSTRUCTION OPERATION IN WHICH SHORING EQUIPMENT IS PLACED, AS THE ORIGINAL FORMS AND SHORES ARE REMOVED, IN ORDER TO SUPPORT PARTIALLY CURED CONCRETE AND CONSTRUCTION LOADS.

1. RESHORING IS ONE OF THE MOST CRITICAL OPERATIONS IN FORMWORK; CONSEQUENTLY, RESHORING PROCEDURE MUST BE DESIGNED AND PLANNED IN ADVANCE BY A QUALIFIED STRUCTURAL ENGINEER AND APPROVED BY THE PROJECT ARCHITECT/ENGINEER.
2. SLABS OR BEAMS WHICH ARE TO BE RESHORED SHOULD BE ALLOWED TO TAKE THEIR PERMANENT DEFLECTION BEFORE FINAL ADJUSTMENT OF RESHORING EQUIPMENT IS MADE.
3. THE RESHORING SHALL BE THOROUGHLY CHECKED BY THE ARCHITECT/ENGINEER TO DETERMINE THAT IT IS PROPERLY PLACED AND THAT IT HAS THE ALLOWABLE LOAD CAPACITY TO SUPPORT THE AREAS THAT ARE BEING RESHORED.
4. EQUIPMENT TO BE LEFT IN POSITION FOR RESHORING SHOULD BE CHECKED THOROUGHLY BY A QUALIFIED ENGINEER. HORIZONTAL SHORING SHOULD NEVER BE USED AS A PART OF RESHORING SYSTEM. EXTREME CARE MUST BE TAKEN TO RELEASE THE ADJUSTMENT SCREWS TO A POINT WHERE THE SLAB TAKES ITS PERMANENT DEFLECTION. THE ADJUSTMENT SCREWS SHOULD THEN BE TIGHTENED UNTIL CONTACT IS AGAIN MADE WITH THE UNDERSIDE OF THE SLAB. IN THIS MANNER THE FRAME RESHORING BELOW WILL NOT BE CARRYING THE LOAD OF THE SLAB THAT IT HAD PREVIOUSLY SHORED.

NOTE 1:
HEIGHT–TO–MINIMUM BASE WIDTH RATIO OF THREE TO ONE (3:1). REFER TO THE GOVERNING CODES FOR YOUR JOB LOCATION.

SHORING EQUIPMENT SPECIFIED IN THESE DRAWINGS AND CALCULATIONS ARE DESIGNED, TESTED AND MANUFACTURED BY OTHERS. SHORING EQUIPMENT MANUFACTURERS ARE RESPONSIBLE FOR DEMONSTRATING THEIR PRODUCT CAPACITY TABLES ACCURACY AND COMPLIANCE TO F.B.C. AND OSHA REQUIREMENTS. SHORING EQUIPMENT MANUFACTURERS ARE RESPONSIBLE FOR RESPONDING TO ANY PROJECT AUTHORITY REQUESTS FOR FL. P.E. SIGNED AND SEALED SHORING EQUIPMENT COPIES OF ACTUAL TEST'S DATA AND CORROBORATING CALCULATIONS.

DWG INDEX:

S–1. GENERAL NOTES
S–2. SITE PLAN AND DETAILS
S–3. FLOOR PLAN
S–4. SECTIONS

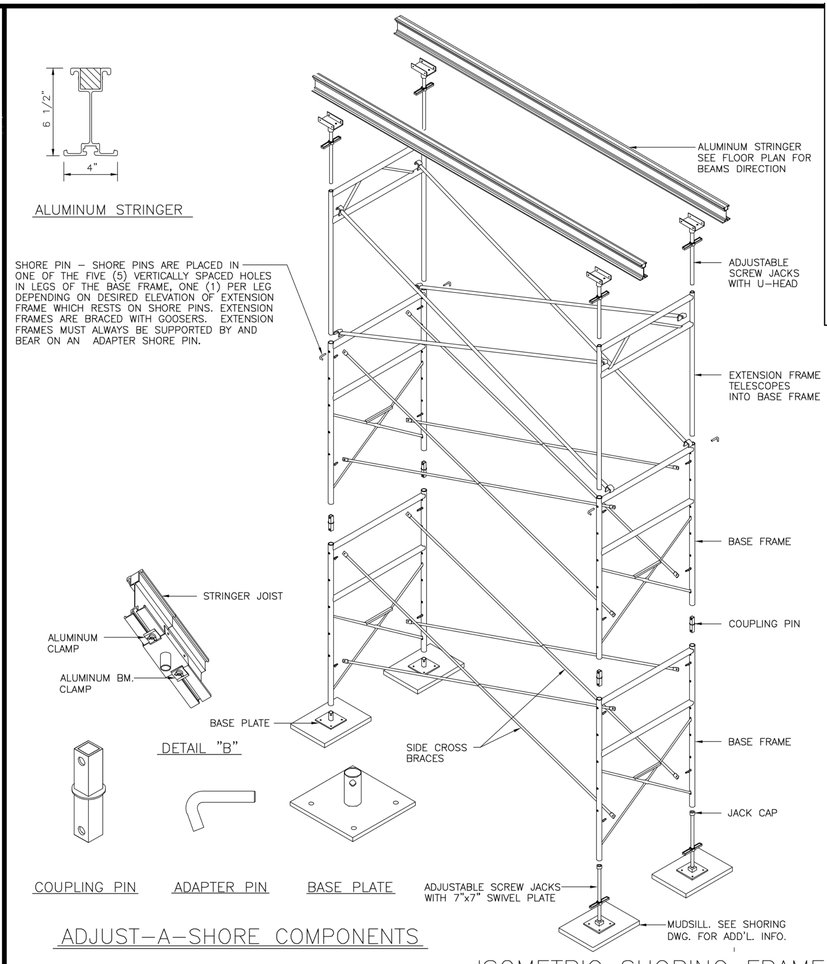

RESERVED FOR CITY STAMP AREA

NOTE:

1. FOR DIMENSIONS AND SCAFFOLD CONFIGURATION, REFER TO MANUFACTURER SPECIFICATION.
2. SEE SHORING AND RE–SHORING DWGS. FOR APPLICABLE EQUIPMENT.

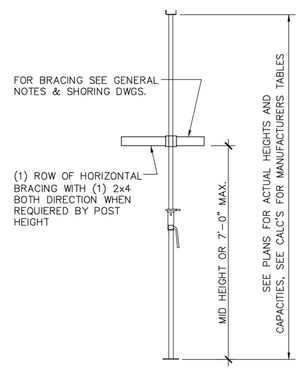

TYPICAL STEEL POST SHORES

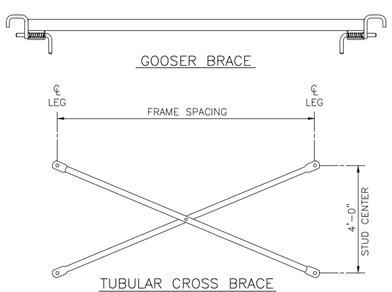

TUBULAR CROSS BRACE

FRAME SPACING	CROSS BRACE (lbs)	GOOSER BRACE (lbs)
4'	8.5	8.8
5'	10.0	10.0
6'	11.5	10.5
7'	12.5	11.0
8'	13.5	12.0
10'	16.5	14.0

This item has been electronically signed & sealed by Eduardo J. Canto, P.E., S.I. Dated: 06/10/2024, using a Digital Signature. Printed copies of this document are not considered signed & sealed and the signature must be verified on any electronic copies.

REVISIONS

TO THE BEST OF THE ENGINEERS KNOWLEDGE, THE PLANS AND SPECIFICATIONS BY THE ENGINEER FOR THIS BUILDING COMPLY WITH THE APPLICABLE MINIMUM BUILDING CODES

EDUARDO J. CANTO P.E.
STRUCTURAL ENGINEER
P.E. No. 56845

E.B. 26946

O.L. 600338–B

RC GROUP, LLC.
7500 N.W. 25th ST. UNIT 292
DORAL, FLORIDA 33122
(305) 477–8860

PROJECT: FORT LAUDERDALE POLICE HEADQUARTERS AREA A
1300W BROWARD BLVD.
FT LAUDERDALE, FL 33312

DWG. TITLE: TEMPORARY CANTILEVER RE–SHORING
GENERAL NOTES

DATE: 06.07.2024
SCALE: AS–SHOWN
DWN. BY: CHKD. BY: E.C.
PROJECT NO: 2406255
DRAWING: SH–00
Sheet 1 of 5

This item has been electronically signed & sealed by Eduardo J. Canto, P.E., S.I. Dated: 06/10/2024, using a Digital Signature. Printed copies of this document are not considered signed & sealed and the signature must be verified on any electronic copies.

RESERVED FOR CITY STAMP AREA

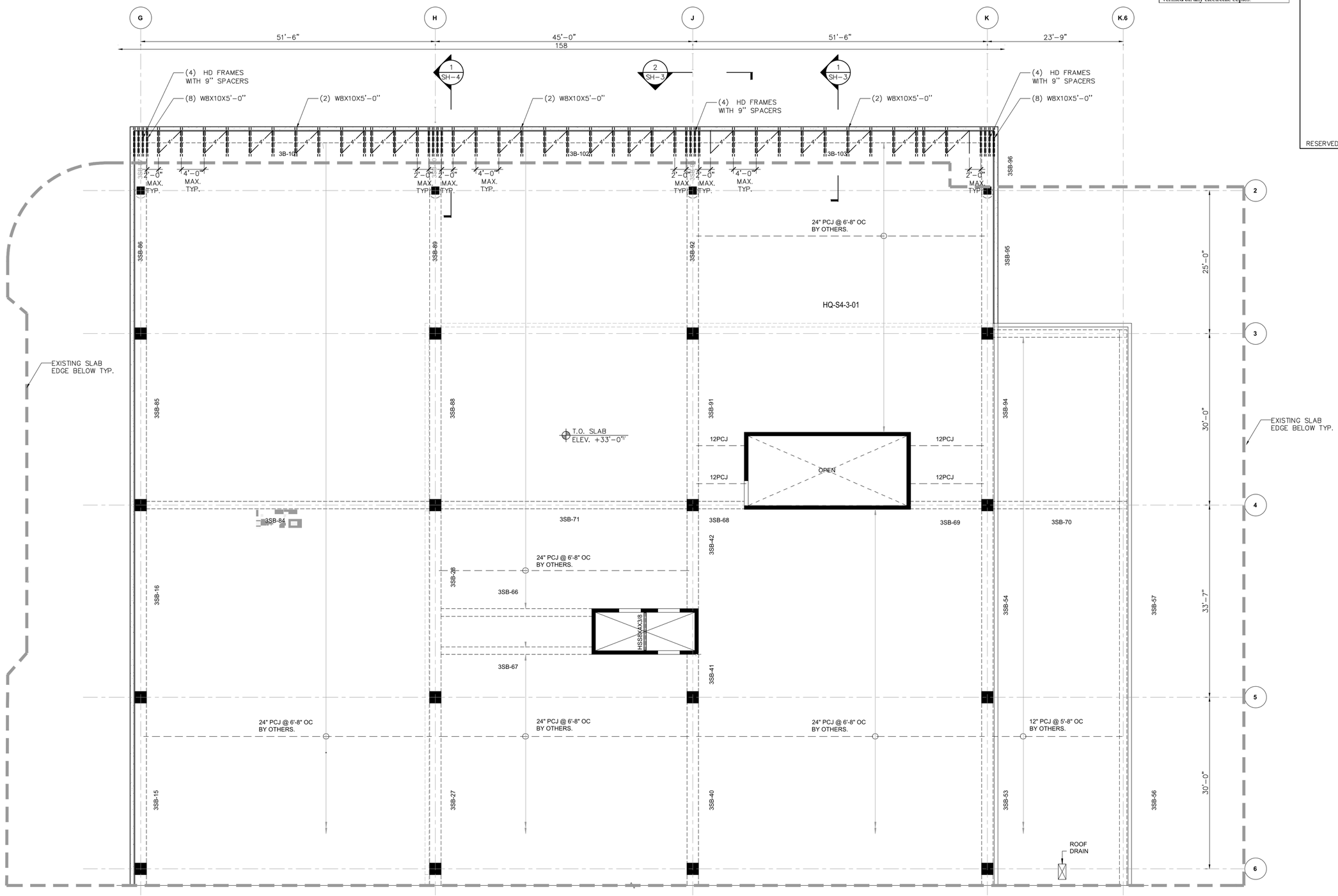

THIRD LEVEL–CANTILEVERS RE–SHORING FLOOR PLAN I ARA A

SCALE : 1/8"=1'-0"

REVISIONS

TO THE BEST OF THE ENGINEERS KNOWLEDGE, THE PLANS AND SPECIFICATIONS BY THE ENGINEER FOR THIS BUILDING COMPLY WITH THE APPLICABLE MINIMUM BUILDING CODES

EDUARDO J. CANTO P.E.
STRUCTURAL ENGINEER
P.E. No. 56845

E.B. 26946

O.L. 600338–8

RC GROUP, LLC.
7500 N.W. 25th ST. UNIT 292
DORAL, FLORIDA 33122
(305) 477–8860

PROJECT: FORT LAUDERDALE POLICE HEADQUARTERS AREA A
1300W BROWARD BLVD.
FT LAUDERDALE, FL 33312

DWG. TITLE: TEMPORARY CANTILEVER RE–SHORING FLOOR PLAN

DATE: 06.07.2024
SCALE: AS–SHOWN
DWN. BY:
CHKD. BY: E.C.
PROJECT NO: 2406255
DRAWING: SH–1
Sheet 2 of 5

This item has been electronically signed & sealed by Eduardo J. Canto, P.E., S.I. Dated: 06/10/2024, using a Digital Signature. Printed copies of this document are not considered signed & sealed and the signature must be verified on any electronic copies.

RESERVED FOR CITY STAMP AREA

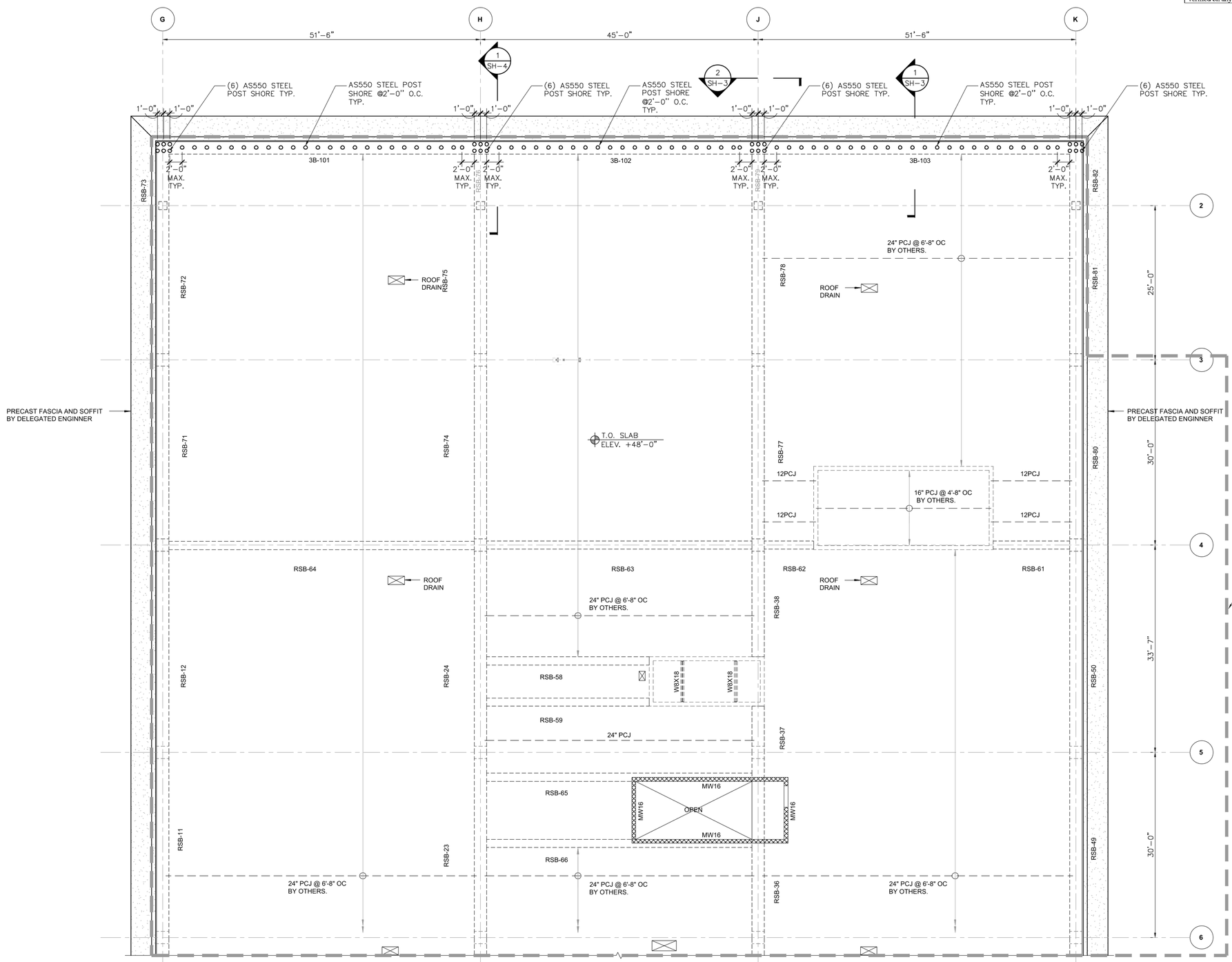

ROOF LEVEL–CANTILEVERS RE–SHORING FLOOR PLAN I ARA A

SCALE : 1/8"=1'–0"

REVISIONS

TO THE BEST OF THE ENGINEERS KNOWLEDGE, THE PLANS AND SPECIFICATIONS BY THE ENGINEER FOR THIS BUILDING COMPLY WITH THE APPLICABLE MINIMUM BUILDING CODES

EDUARDO J. CANTO P.E.
STRUCTURAL ENGINEER
P.E. No. 56845

E.B. 26946

O.L. 600338–8

RC GROUP, LLC.
7500 N.W. 25th ST. UNIT 292
DORAL, FLORIDA 33122
(305) 477–8860

PROJECT: FORT LAUDERDALE POLICE HEADQUARTERS AREA A
1300W BROWARD BLVD.
FT LAUDERDALE, FL 33312

DWG. TITLE: TEMPORARY CANTILEVER RE–SHORING FLOOR PLAN

DATE: 06.07.2024
SCALE: AS–SHOWN
DWN. BY:
CHKD. BY: E.C.
PROJECT NO: 2406255
DRAWING: SH–2
Sheet 3 of 5

This item has been electronically signed & sealed by Eduardo J. Canto, P.E., S.I. Dated: 06/10/2024, using a Digital Signature. Printed copies of this document are not considered signed & sealed and the signature must be verified on any electronic copies.

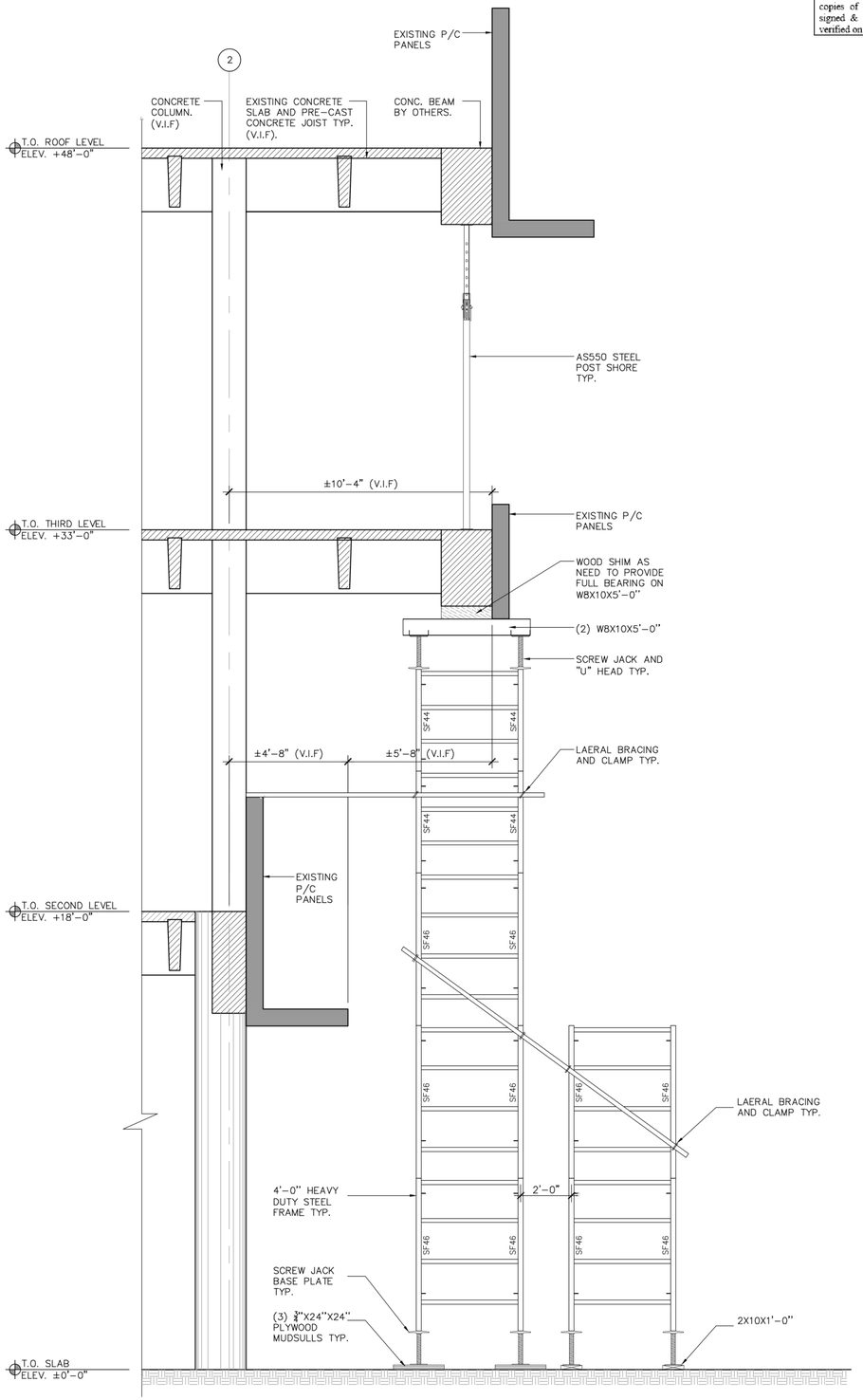

SECTION 1
SCALE : 3/8"=1'-0"
SH-3

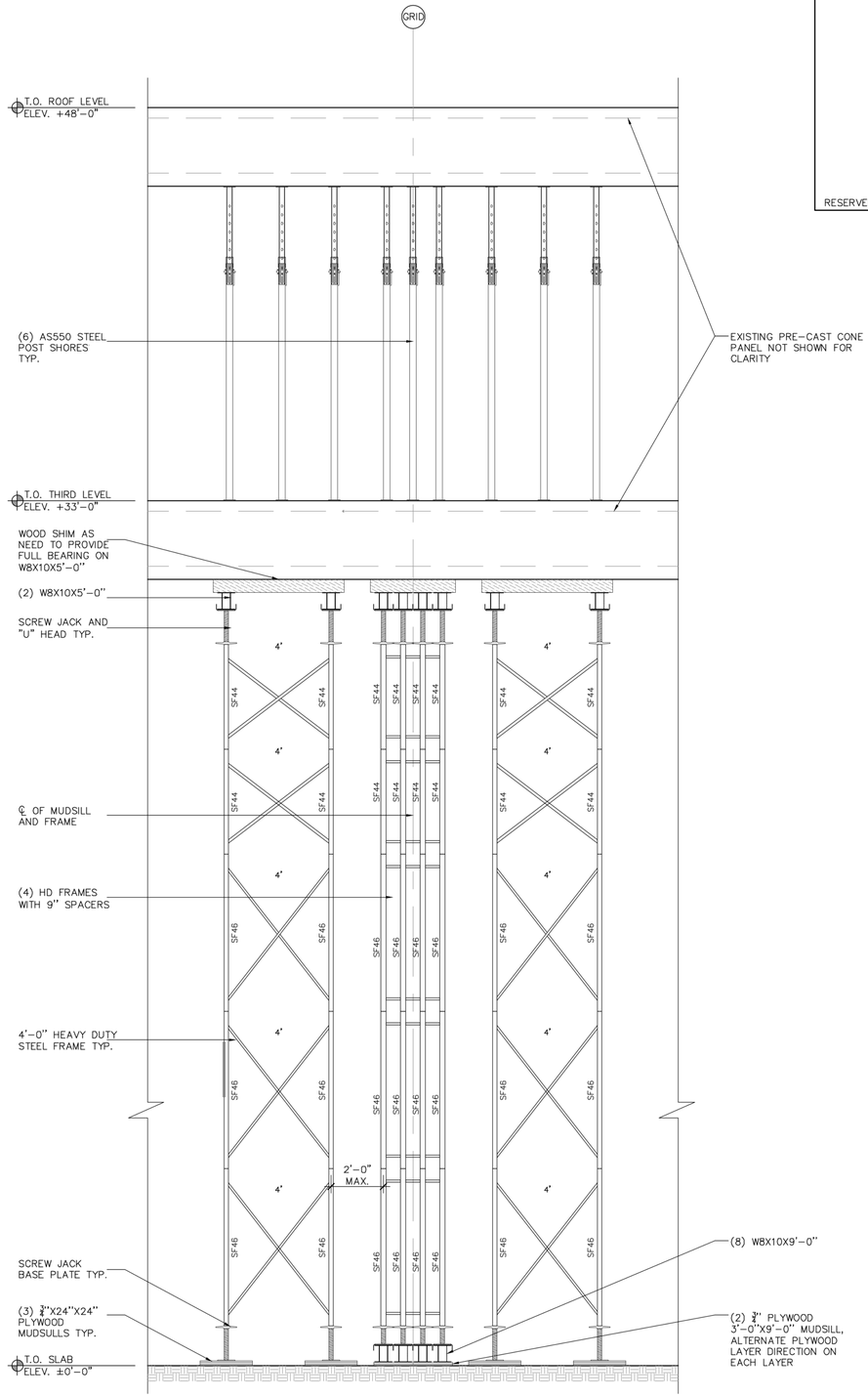

SECTION 2
SCALE : 3/8"=1'-0"
SH-3

RESERVED FOR CITY STAMP AREA

REVISIONS

TO THE BEST OF THE ENGINEERS KNOWLEDGE, THE PLANS AND SPECIFICATIONS BY THE ENGINEER FOR THIS BUILDING COMPLY WITH THE APPLICABLE MINIMUM BUILDING CODES

EDUARDO J. CANTO P.E.
STRUCTURAL ENGINEER
P.E. No. 56845

E.B. 26946

O.L. 600338-8

RC GROUP, LLC.
7500 N.W. 25th ST. UNIT 292
DORAL, FLORIDA 33122
(305) 477-8860

PROJECT: FORT LAUDERDALE POLICE HEADQUARTERS AREA A
1300W BROWARD BLVD.
FT LAUDERDALE, FL 33312

DWG. TITLE: TEMPORARY CANTILEVER RE-SHORING SECTIONS

DATE: 06.07.2024
SCALE: AS-SHOWN
DWN. BY:
CHKD. BY: E.C.
PROJECT NO: 2406255
DRAWING: SH-3
Sheet 4 of 5

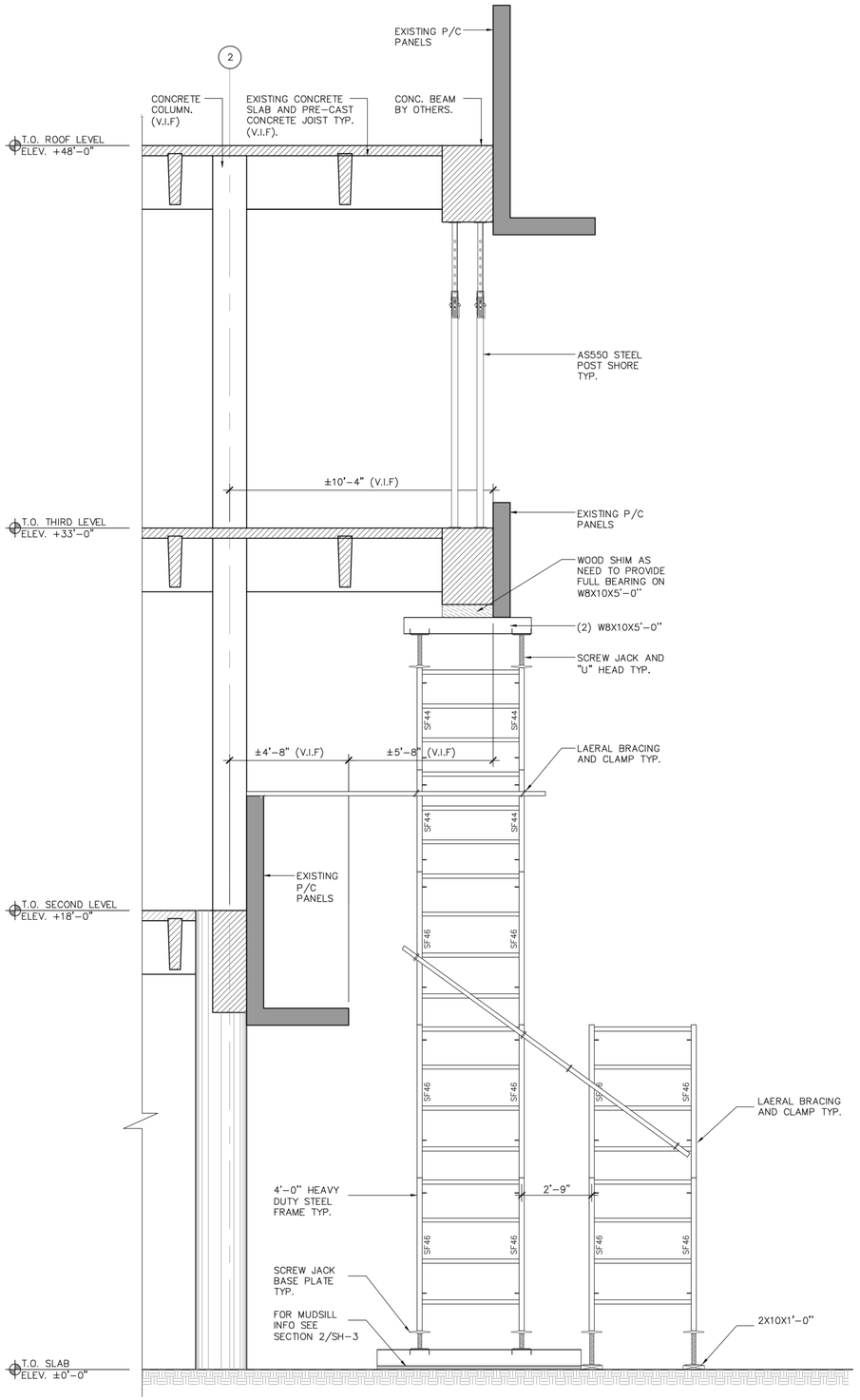

SECTION 1 / SH-4
SCALE : 3/8"=1'-0"

This item has been electronically signed & sealed by Eduardo J. Canto, P.E., S.I. Dated: 06/10/2024, using a Digital Signature. Printed copies of this document are not considered signed & sealed and the signature must be verified on any electronic copies.

RESERVED FOR CITY STAMP AREA

REVISIONS

TO THE BEST OF THE ENGINEERS KNOWLEDGE, THE PLANS AND SPECIFICATIONS BY THE ENGINEER FOR THIS BUILDING COMPLY WITH THE APPLICABLE MINIMUM BUILDING CODES

EDUARDO J. CANTO P.E.
STRUCTURAL ENGINEER
P.E. No. 56845

E.B. 26946

RC GROUP, LLC.
7500 N.W. 25th ST. UNIT 292
DORAL, FLORIDA 33122
(305) 477-8860

O.L. 600338-B

PROJECT: FORT LAUDERDALE POLICE HEADQUARTERS AREA A
1300W BROWARD BLVD.
FT LAUDERDALE, FL 33312

DWG. TITLE: TEMPORARY CANTILEVER RE-SHORING SECTIONS

DATE: 06.07.2024
SCALE: AS-SHOWN
DWN. BY:
CHKD. BY: E.C.
PROJECT NO: 2406255
DRAWING: SH-4
Sheet 5 of 5

Moss & Associates, LLC
2101 N Andrews Avenue
Ft Lauderdale, FL 33311

June 21, 2024

David Lovern
City of Fort Lauderdale
100 N Andrews Ave
Ft. Lauderdale, FL 33301

RE: Potential Change Item (PCI) 0149 Notification
Fort Lauderdale Police Headquarters - B372302

Dear David Lovern,

This letter is to provide official notification of a potential change item (PCI) as follows:

PCI Number: 0149
Date: June 21, 2024
Description: Supply Fume Hoods per RFI 468
Days Requested:
Reason: Owner Directive - External
Scope Description: Furnish fume hood originally to be provided by Owner. Installation cost included in base contract. Final pricing to may be revised pending Sequence of Operations from design team and adjustment to hood/cabinets based on added neutralization tank per RFI 498.

This PCI is comprised of the following items:

Supply Fume Hood	$ 52,275.00
01 Construction Contingency 2%	$ 1,046.00
02 Subcontract Default Insurance 1.25%	$ 667.00
03 Moss Insurance 1.75%	$ 945.00
04 Bond 1%	$ 549.00
05 Fee 4%	$ 2,219.00
Grand Total	$57,701.00

Per the terms and conditions of our contract, we have attached the appropriate back up documentation to substantiate the above referenced costs. This request only includes the items specifically identified in this change proposal. All other costs associated with this project shall be submitted under a separate change order cover.

We respectfully reserve our rights to request additional time should it become evident that this work will impact the overall completion of the project. The costs associated with this PCI will remain valid for fourteen (14) calendar days after submission.

Please indicate your formal approval for this additional work and cost by signing in the space provided below. Moss & Associates will then incorporate this change into the next Owner Change Order (OCO).

If you should have any questions, please contact the undersigned at 954-326-2727 as soon as possible.

Sincerely, **Moss & Associates, LLC** _____ Date: _____ Matthew Kane Project Manager	Reviewed / Approved by: **City of Fort Lauderdale** **Approved:** _____ **Date:**_____ **(Owner)**

H2I GROUP
430 Industrial Blvd., Minneapolis, MN 55413 || Ph: 612.331.4880 || Toll Free: 800.795.0696

CO1 PROPOSAL 86983

To: **Moss**
Attn: Angel Lopez
(408) 854-9042
Alopez@mosscm.com

Date: **04/24/2024**
Project: **Ft Lauderdale Police HQ**
Location: **Ft Lauderdale, FL**
Architect: **AECOM**

We propose to furnish the following using standard design, materials, construction sizes and colors. Based on Architectural Drawing, Specifications, modification, and classification via email to Patricia Hays on 3/5/24 through 04/25/2024. Per RFI 468 response H2I is to provide constant volume fume hoods in lieu of the specified VAV fume hoods.

Price includes a 2024 delivery. Escalation charges will incur if delivered after 2024. Current lead time for Fume Hood fabrication is 12-14 weeks (subject to change) from release of approved shop drawings.

Fume Hood

Material, freight, and installation **$52,275.00**

Pricing Includes:

1. (2) 6Ft XL fume hoods with
   a. panelized 304 SST Interior
   b. Left Service – (1) HW/CW gooseneck fixture and (1) GFCI duplex 115V
   c. Right Service – (1) GFCI duplex 115V
   d. Pre-pipe to top with copper tubing
   e. Constant Volume
   f. Sash handle: Coated extruded aluminum
   g. Airfoil: 304 Epoxy Coated SST
   h. Auto Return
   i. Sash stop safety decal
   j. Color: Glacier White (only)
   k. Digital alarm
2. (2) 304 SST worksurface with integral 3x6 cup sink (Left Rear)
3. (2) 36" Acid cabinet with vent kit and shelf
4. (2) 36" Solvent cabinet with self-closing doors and shelf
5. (2) 3-sided, 6' wide ceiling enclosure to extend 4" above ceiling grid. (10'-4" per Dylan. During site visit on 3/25/24)

Qualifications:

1. Installation is assumed to be include during the lab 1408 installation. If for reason beyond H2I control, additional trip charge will need to be approved via an additional change order.
2. Due to the unsettled nature of "Steel Tariffs" and "Freight Regulations," any such surcharges are not included in this proposal. Any steel or freight surcharges incurred will be passed along to the customer.
3. Due to the unsettled nature of "Epoxy Resin" materials and availability, any surcharges or product delivery disruptions which may occur are not included in this proposal. Any surcharges or delay costs will be passed along to the customer. It is highly recommended for you to review this situation with H2I for product options which currently are not affected.

4. We reserve our right to a schedule extension; change orders for additional costs (including but not limited to material escalation; labor rate increases; acceleration costs; shipping costs; storage costs; administration overhead; etc.) related to any occurrence of an event which is outside of our reasonable control and which prevents us from performing our obligations (Examples but not limited to: acts of God; strikes or other labor disturbances; delays in transportation; war; acts of terrorism; epidemics; pandemics; (such as COVID-19); etc.).
5. Fume Hood
    a. Factory ASHRAE tests are on file for standard hoods. If job-specific hood testing is required prior to shipment, please contact Labconco for an upcharge and increased lead time.
    b. As the Labconco Protector XL hood is the basis of design, hoods are quoted as standard as possible to keep the lead time and cost down and exclusions to the spec are taken as follows:
        i. Auxiliary Air is not provided by Labconco and is excluded from quotation.
        ii. Fume hood exterior is powder-coated steel in lieu of Fiberglass exterior.
        iii. Sash is vertical rising tempered safety glass in lieu of laminated.
        iv. Sash handle is coated extruded aluminum in lieu of 316 stainless steel.
        v. Sash system is chain and sprocket due to auto return feature.
        vi. Airfoil is quoted as 304 Epoxy Coated SST.
        vii. Light fixtures are LED in lieu of florescent.
    c. Airflow Indicator and alarm is excluded from quotation due to these hoods being on a VAV system.
    d. Labconco will factory prep. the fume hood for VAV components but is not responsible for providing sensors, monitors, installation, etc., as it will be provided by others.

Excludes:

1. Any Liquidated, Consequential and/or Actual Damages clauses.
2. Fume hoods –
    a. Exhaust fans, Duct, Controls, Airflow Indicators, and Auxiliary Air Plenum
    b. VAV prep – removed due to RFI 468
    c. Basic ASHREA110 fume hoods field testing
3. Acid/Flammable Cabinets
    a. Exclude – Seismic kit. If needed addition cost required
    b. Exclude – Silk-screen lettering. not included in specs. If needed addition cost required
4. Final Connections by MEP Trades.
5. Charges for vertical transportation, Mechanical utilities and connections, Electrical utilities and connections, Bonds, Removal of existing equipment, Traps, Ducts, Fume hood fan/blowers, Fume hood testing/balancing, Rubber/vinyl base, In-wall backing/blocking.
6. Note: Clean-up to be limited to removing all debris, dirt and rubbish accumulated as a result of our installation to a dumpster provided by others, leaving the premises broom clean and orderly.

SEE PAGE 3 for Terms & Conditions

This proposal is based upon usage of the AGC/ASA/ASC "Standard Form Construction Subcontract," 1996 Edition or a subcontract form otherwise acceptable to H2I Group, Inc.

TERMS: Net 30 Days

ACCEPTED: Company _____
Name _____
Date _____

RESPECTFULLY,
H2I Group, Inc.
By Patricia Hays
Patricia Hays
Senior Project Manager

H2I GROUP
430 Industrial Blvd., Minneapolis, MN 55413 || Ph: 612.331.4880 || Toll Free: 800.795.0696

(770) 756-2154
Phays@h2igroup.com

Note: This quotation is offered for acceptance within 15 days and is subject to revision beyond that time.

DIR# PW-LR-1000537618

Contractors Licenses: Arizona # 327293 | California # 1060739 | Nevada C3#0084853, C26#00845851

PROPOSAL 86983

H2I Group Inc. Terms and Conditions

General
These terms and conditions are a component part of the attached proposal and constitute the entire agreement between H2I Group Inc. (hereinafter H2I). By signing the proposal, Customer acknowledges that they understand and accept the proposal and the following terms and conditions. All work shall be done in accordance with the attached proposal unless otherwise provided for in writing and signed by H2I. Applicable sales, excise and use taxes are not included unless otherwise stated in the proposal. Tax exempt entities hereby agree to furnish tax exemption certificates when requested on non-taxable materials. Material Only Contracts: Responsibility for the unloading, handling, storage, and installation of material transfers to the Customer upon shipment from the factory. Customer is responsible for receiving, unloading, and inspecting materials and filing freight claim for any shortage or damage of materials. Delivery and freight charges are not included unless otherwise stated in the proposal.

Site Conditions
A smooth, level, and clean sub-floor shall be provided or as required by H2I. Maintain environment at proper temperature (55-80 degrees F.) and humidity (35-50%) before, during and 30 days following installation. Delays due to circumstances beyond the control of H2I shall entitle H2I to an equitable adjustment of time and contract price.

Acceptance
This proposal may be accepted within 30 days subject to credit approval. H2I reserves the right to revoke this offer prior to acceptance by customer. Customer agrees that, by signing, grant authority to credit bureaus to release credit history information for the purpose of establishing credit with H2I and its subsidiaries. H2I and its subsidiaries may, if payment for work performed by H2I will pass thru from a third party require a credit application, joint check agreement with the property owner/end user if the property owner/end user is a separate entity from the Customer, a copy of the Customer's payment bond, and/or a personal guarantee, as a condition of credit approval. Customer agrees that payments received from a third party for services performed by H2I shall be held in trust and first paid to H2I for material and labor costs paid by H2I.

Installation
This proposal assumes unloading and elevator use shall be conducted during normal business hours. This proposal is based on completing the work during normal business hours. Overtime, evening, and weekend work is available at additional charge. Customer agrees to provide H2I with sufficient and timely unloading facilities, dock and elevator access as needed at no additional cost to H2I. Customer shall provide temporary, secure storage for materials prior to installation. Customer shall provide adequate electrical power, lighting, water, and restroom facilities during installation. Customer shall provide area that is free and clear and prepared for installation.

Engineering
All engineering, proposal drawings, specifications shall represent H2I's investment in engineering skill and development and remain the property of H2I. Such are submitted with the understanding that the information will not be disclosed or used in any way detrimental to H2I's interests.

Changes
Any requests for changes to the scope of work shall be made in writing with signed acceptance by authorized personnel from H2I and Customer.

Liability
H2I shall not be liable for damages in any form or any other claim arising out of strikes, floods, fire, accidents, or any other causes beyond our control. H2I shall not be liable for liquidated, consequential or any other damages or penalties of any kind for delays in completion of work. H2I indemnity obligations to the Customer and owner are limited to the liability created by the gross negligence of Haldeman Homme Holdings, its employees, or subcontractors. In the event the terms of this agreement conflicts with the Customer's proposal or purchase order the parties acknowledge and agree the terms of this agreement shall control.

Payment
Payment in full will be due and payable thirty (30) days from invoice date. Customer agrees to pay progress-billing invoices during the course of the project reflecting partial shipment of material and/or partial completion of labor work performed. Where materials are stored or staged temporarily at the job site or in offsite or bonded warehouse, customer shall pay for materials and reasonable storage charges. The failure of the Customer to make payments within contract terms shall entitle H2I, in addition to all other rights, to suspend all work and shipments and shall further entitle H2I to an extension of time of performance of the work. No payments shall be withheld from, or penalties assessed against H2I due to causes for which H2I is not responsible.

Customer agrees that, if the billed amount is not paid within terms, a service charge will be charged on the overdue balance at a percentage rate of 1.5% (18% ANNUAL PERCENTAGE RATE) for all accounts. If the customer fails to pay the entire unpaid balance on the account when due H2I may without further notice or demand, exercise all rights and remedies available by law for the collection of the balance due on the account. H2I reserves the option to always exercise its lien rights in accordance with applicable law to secure collection of amounts due. Applicant will be liable for all expenses of collection with or without suit, including all court costs and reasonable attorney's fees to the extent under applicable state law. Venue shall be the State District Court of Minnesota.

Disputes
Customer and H2I hereby agree that disputes between the parties which cannot be settled amicably, shall be settled through the State District Court of Minnesota.

Cancellation
An officer of H2I must approve cancellation requests in writing. In order to compensate H2I for its investment in engineering, time, processing and administrative work, approved cancellations shall be subject to cancellation charge of 25% of the contract amount plus the cost of materials produced or in production, labor or other services performed, freight, taxes and any other out of pocket expenses incurred by H2I.

Warranty
THE MANUFACTURER EXPRESS WARRANTY IS PROVIDED IN LIEU OF ALL OTHER WARRANTIES, EXPRESS OR IMPLIED. THE WARRANTIES OF MERCHANTABILITY AND FITNESS FOR A PARTICULAR PURPOSE ARE HEREBY DISCLAIMED BY H2I.

Insurance

H2I maintains insurance and will provide certificates of insurance if requested on coverage and limits as provided by its insurance policy. No other insurance coverage is provided including waiver of subrogation or additional named insureds.

Codes

Customer, architect and/or contractor shall be responsible for all local, state, and federal agency code compliance, permits, fees, design, engineering, and testing. H2I does not provide professional liability or pollution insurance for any of these services. Costs for any and all such services are not included in this proposal.

Signature: _____ Name: _____ Date: _____
(Please Print)

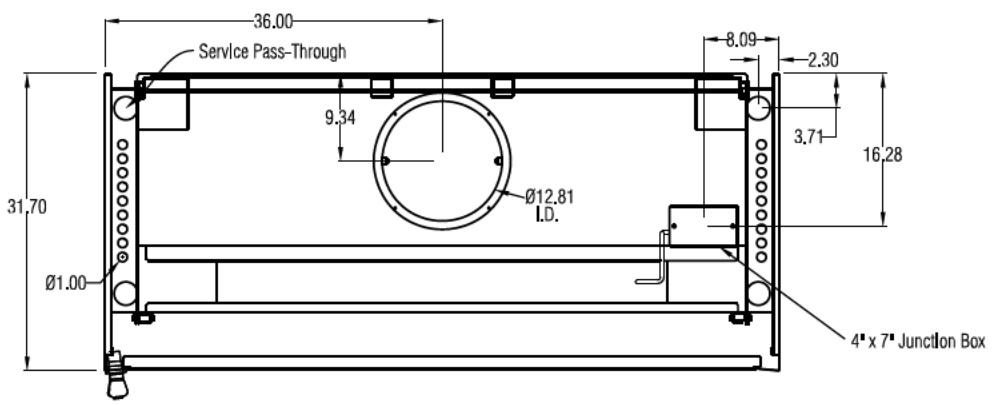

TOP VIEW

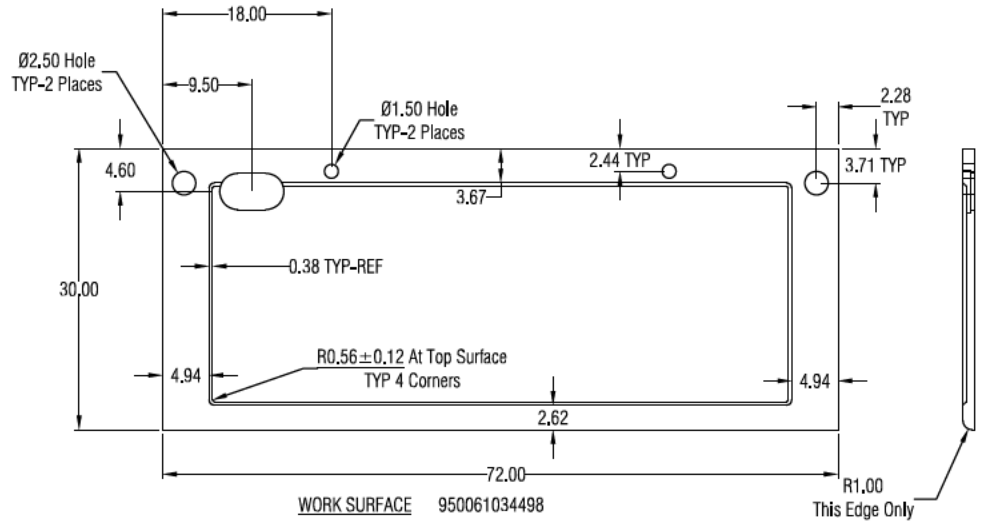

WORK SURFACE 950061034498

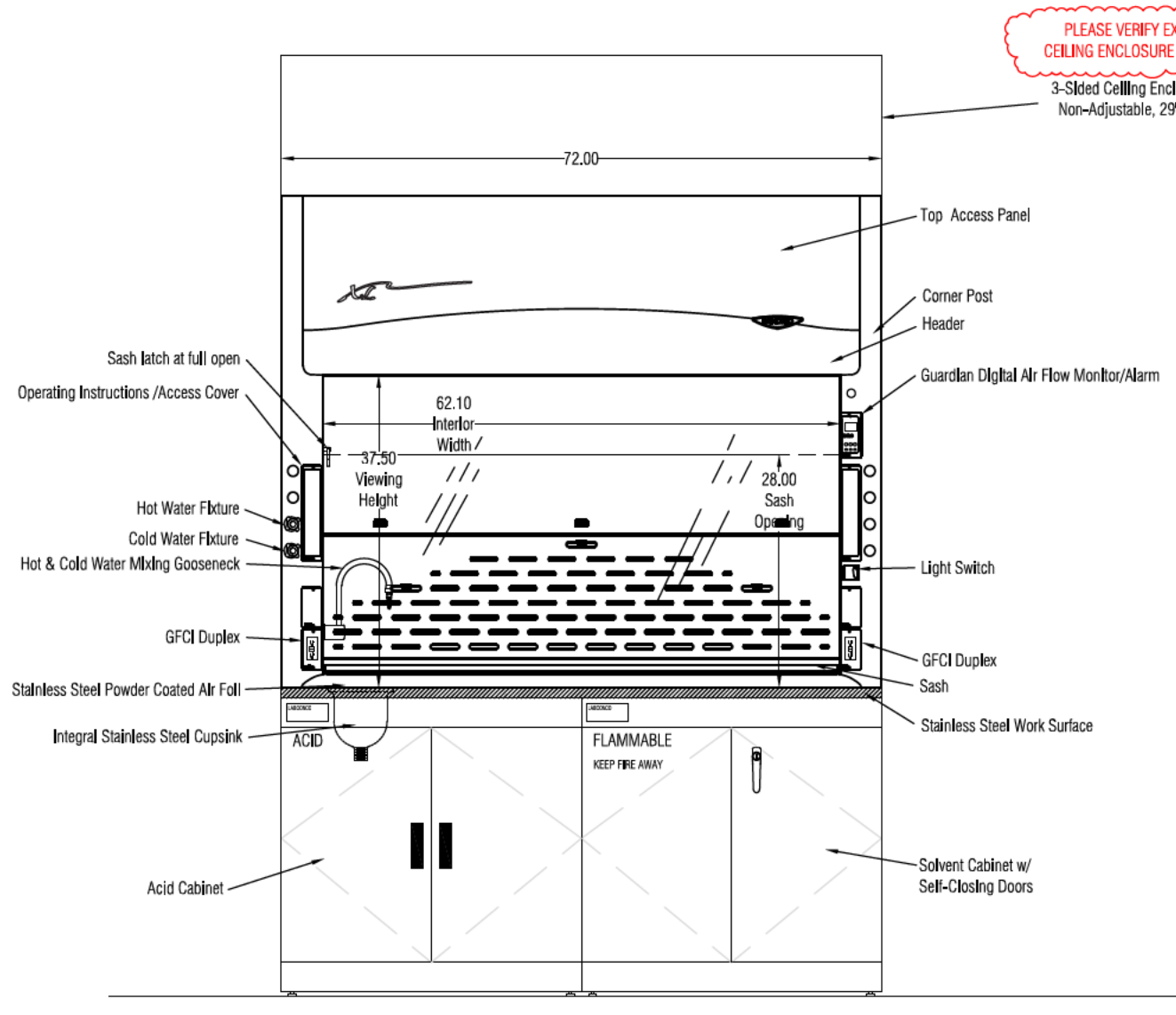

FRONT VIEW

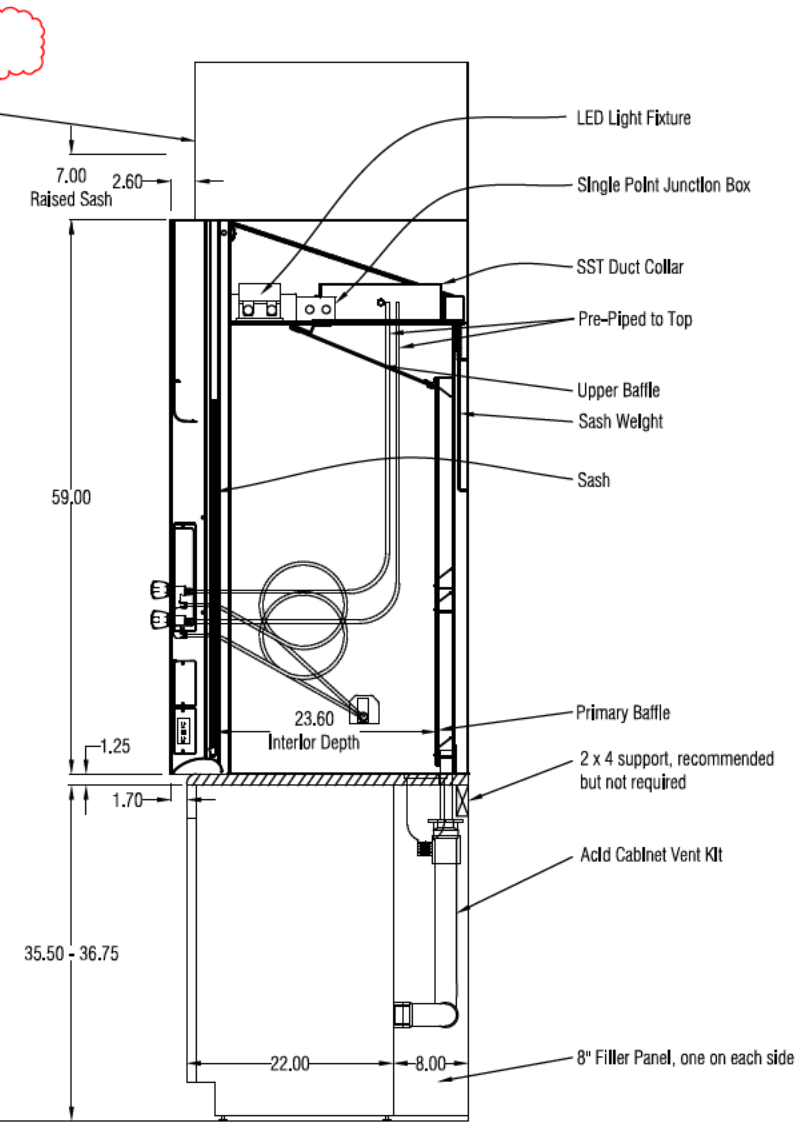

SIDE VIEW

GENERAL DESCRIPTION

6' Protector XL Laboratory Hood, 31.7" Exterior
Model: 11160020034498B Quantity: 2

Exterior Superstructure
* Double Wall Construction * Cold Rolled Steel

Interior Superstructure
* Galvanized Steel (standard)

Left / Right Facia:
* Powder Coated Steel * Color: Glacier White

Liner Material
* 304 Panelized Stainless Steel

Side Panels
* Both Sides * Removable * Color: Glacier White

Baffles
* 304 Panelized Stainless Steel

Interior Access Panels
* None Provided

Corner Post with Access Covers
* Right and Left Sides
* Cold Rolled Steel

Air Foil
* Stainless Steel * Powder Coat Finish

Sash
* Vertical Travel
* Tempered Safety Glass
* Counter Weighted and Balanced
* Chain and Sprocket
* Sash latch at full open
* AutoReturn to 18" (Sash returns to 18" when raised above 18")
* Sash height safety decal at 18"

Electrical Fixtures
* LED Light and Tubes w/ Switch
* Duplex, 115VAC / 60HZ / 20A/ GFCI
* Duplex, 115VAC / 60HZ / 20A/ GFCI

Alarm / Monitor
* None Provided by Labconco

Wiring
* Fume Hood Wired at Factory
* Electrical Connection made inside 4x7 Junction Box
* Guardian Digital Airflow Monitor/Alarm
* 100–115V, 50/60 Hz

VAV Preparations
* None Requested

Service Fixtures
* Labconco * Color–Coded Hooded Handle * Front Loading

Symbol	Service	Color
CW	Cold Water	Green
HW	Hot Water	Red

Plumbing
* Connections Made with Swagelock Compression Fittings
* Final connection by others
* Service Fixtures Pre–Piped to Top of Hood
* Hot & Cold Water Mixing Gooseneck is 1/4" Copper Tubing

Work Surface
* Dished 304 Stainless Steel Work Surface # 950061034498
  * Integral Stainless Steel Cup Sink, Left Rear Location

Cabinets
* 36" Acid Cabinet w/ Polyethylene Liner, Left # 9901100
* Acid Vent Kit # 3591100
* 36" Acid Cabinet Shelf Kit, # 9919001
  (Shipped loose for field installation)
* 36" Solvent Cabinet w/ Shelf, Right # 9903100
  Includes Self–Closing Doors
* Color: Glacier White
* 8" deep Filler Panel, one included with each cabinet

Accessories
* Ceiling enclosure, 3 sides, Non–Adjustable, 29" tall
  # 955060434498

	Airflow Volumetric Rate (CFM) @ Static Pressure (inches of water)	
Face Velocity (fpm)	100% open (28")	62.5% open (18")
100	1150 @ 0.44"	720 @ 0.17"
80	920 @ 0.28"	575 @ 0.11"
60	690 @ 0.16"	430 @ 0.06"

Assembly and Crating
* Pre–Assembled
* Palletized

SCALE: Scaled to fit

FUME HOODS for: Ft. Lauderdale Police Headquarters

CAM #24-0670
Exhibit 1
Page 62 of 288

LABCONCO CORPORATION • KANSAS CITY MO USA 64132
800-821-5525 / 816-333-8811 • labconco.com

LCC Order Number: XXXXXX

Rev	Date

Date: 04-05-2024
Drawing # 11160020034498B
Drawn By: E. Werth
Checked By:
Approved By:
Sheet No.

Log Number: XXX-XX

Moss & Associates, LLC
2101 N Andrews Avenue
Ft Lauderdale, FL 33311

June 21, 2024

David Lovern
City of Fort Lauderdale
100 N Andrews Ave
Ft. Lauderdale, FL 33301

RE: Potential Change Item (PCI) 0147 Notification
Fort Lauderdale Police Headquarters - B372302

Dear David Lovern,

This letter is to provide official notification of a potential change item (PCI) as follows:

PCI Number: 0147
Date: June 21, 2024
Description: ROM Additional Costs for Surveying and Concrete Repairs Not Included in PCI 86 (Incl. Markup)
Days Requested:
Reason: Owner Directive - External
Scope Description: Rough order of magnitude cost for additional surveying based on assumption of surveying continuing until 8/2/24. Projected cost of surveying through 5/31/24 submitted via PCI 86. Also includes ROM for concrete beam, deck, and column repairs per preliminary LYE report which Moss is pending final direction from City/EOR. Does not include foundation repair ROM as pending LYE/TT consensus as of 6/20/24 meeting.

This PCI is comprised of the following items:

Projected Additional Survey Costs Not Included in PCI 86 Assuming Through 8/2/24	$ 44,730.00
ROM Additional Concrete Repairs not Included in PCI 86. ROM for CIP Roof Beam and Carbon Fiber Repairs per Preliminary LYE Report pending review and consensus by EOR. Does not include ROM for potential foundation repairs still under review by LYE/TT as of 6/20/24.	$ 150,000.00
01 Construction Contingency 2%	$ 3,895.00
02 Subcontract Default Insurance 1.25%	$ 2,483.00
03 Moss Insurance 1.75%	$ 3,519.00
04 Bond 1%	$ 2,046.00
05 Fee 4%	$ 8,267.00
Grand Total	$214,940.00

Per the terms and conditions of our contract, we have attached the appropriate back up documentation to substantiate the above referenced costs. This request only includes the items specifically identified in this change proposal. All other costs associated with this project shall be submitted under a separate change order cover.

We respectfully reserve our rights to request additional time should it become evident that this work will impact the overall completion of the project. The costs associated with this PCI will remain valid for fourteen (14) calendar days after submission.

Please indicate your formal approval for this additional work and cost by signing in the space provided below. Moss & Associates will then incorporate this change into the next Owner Change Order (OCO).

If you should have any questions, please contact the undersigned at 954-326-2727 as soon as possible.

Sincerely, **Moss & Associates, LLC** _____ Date: _____	Reviewed / Approved by: **City of Fort Lauderdale**

Matthew Kane Project Manager	**Approved: _____ Date:_____** **(Owner)**

Matthew Kane

From: Paige Ioia <pioia@keithteam.com>
Sent: Tuesday, June 18, 2024 10:34 AM
To: Matthew Kane
Cc: Jimmy Lorenzo; Olenka Namuche; Sean Marshall; D'von Nottage; Christopher Andrisani; Donald Spicer
Subject: RE: Roof North Beam Deflection

CAUTION: This email originated from outside of Moss
Do not click links or open attachments unless you can confirm the sender and know the content is safe.
Be careful of any attachments or links that ask for your password.

Good Morning Matthew,

It looks like since we started this back in the beginning of April, we are at about a current total of about $35,400 just on the settlement effort.

Thank you

Paige Ioia, CST I
Project Surveyor
Office: 954.788.3400
Email: pioia@keithteam.com
www.KEITHteam.com

From: Matthew Kane <MKane@mosscm.com>
Sent: Tuesday, June 18, 2024 8:26 AM
To: Paige Ioia <pioia@keithteam.com>
Cc: Jimmy Lorenzo <JLorenzo@mosscm.com>; Olenka Namuche <ONamuche@mosscm.com>; Sean Marshall <SMarshall@keithteam.com>; D'von Nottage <DNottage@mosscm.com>; Christopher Andrisani <CAndrisani@mosscm.com>; Donald Spicer <dspicer@keithteam.com>
Subject: RE: Roof North Beam Deflection

Thank you. Could you please send updated invoice log?

Matthew Kane
Project Manager
CS Committee Member cserg@mosscm.com
Moss
Cell: 321.427.3500
mosscm.com

From: Paige Ioia <pioia@keithteam.com>
Sent: Tuesday, June 18, 2024 8:02 AM
To: Matthew Kane <MKane@mosscm.com>
Cc: Jimmy Lorenzo <JLorenzo@mosscm.com>; Olenka Namuche <ONamuche@mosscm.com>; Sean Marshall

Survey Cost as of 6/14/24	$	35,400.00
Survey Cost Projected through 5/31/24 Incl. in PCI 86	$	(15,450.00)
Survey Cost Projected through 8/2/24 (7 weeks at $3,540/week)	$	24,780.00
Projected Additional Survey Costs Not Included in PCI 86 Assuming Through 8/2/24	**$**	**44,730.00**
ROM CIP Beam Repairs - Pending Final Design/Direction	$	25,000.00
ROM Carbon Fiber Repairs - Pending Final Design/Direction	$	125,000.00
ROM Foundation Repairs - No Suggestions Provided	TBD	
ROM Additional Concrete Repairs Not Included in PCI 86	**$**	**150,000.00**
ROM Additional Costs Surveying and Concrete Repairs Not Included in PCI 86 (Incl. Markup)	**$**	**214,940.00**

Moss & Associates, LLC
2101 N Andrews Avenue
Ft Lauderdale, FL 33311

June 21, 2024

David Lovern
City of Fort Lauderdale
100 N Andrews Ave
Ft. Lauderdale, FL 33301

RE: Potential Change Item (PCI) 0135 Notification
Fort Lauderdale Police Headquarters - B372302

Dear David Lovern,

This letter is to provide official notification of a potential change item (PCI) as follows:

PCI Number: 0135
Date: June 09, 2024
Description: Rough Order of Magnitude (ROM) Pricing - Cafeteria Servicing 2002 Buildout ROM For All Trades: Cafeteria Subcontractor, Electrician, Etc.
Days Requested: TBD.
Reason: Owner Directive - External
Scope Description: Moss GMP Assumptions & Clarifications Item G-13 excludes the Cafeteria Kitchen Equipment & Future Kitchen Exhaust Fan System. The following PCI-135 is a one price line item with a Rough Order of Magnitude (ROM) Pricing for the buildout for the Cafeteria Servicing 2002. Final pricing cannot be provided until the City of Fort Lauderdale issues AECOM a task to provide a Cafeteria Kitchen Design, the Cafeteria Kitchen Design is issued by AECOM to Moss for final pricing and RFI-510 & RFI-515 are provided formal responses.

This PCI is comprised of the following items:

Electrical (Lighting Fixture Breakout: $1,734,180)	$ 400,000.00
01 Construction Contingency 2%	$ 8,000.00
02 Subcontract Default Insurance 1.25%	$ 5,100.00
03 Moss Insurance 1.75%	$ 7,229.00
04 Bond 1%	$ 4,203.00
05 Fee 4%	$ 16,981.00
Grand Total	$441,513.00

Per the terms and conditions of our contract, we have attached the appropriate back up documentation to substantiate the above referenced costs. This request only includes the items specifically identified in this change proposal. All other costs associated with this project shall be submitted under a separate change order cover.

We respectfully reserve our rights to request additional time should it become evident that this work will impact the overall completion of the project. The costs associated with this PCI will remain valid for fourteen (14) calendar days after submission.

Please indicate your formal approval for this additional work and cost by signing in the space provided below. Moss & Associates will then incorporate this change into the next Owner Change Order (OCO).

If you should have any questions, please contact the undersigned at 954-326-2727 as soon as possible.

Sincerely, **Moss & Associates, LLC** _____ Date: June 21, 2024 **Michael Perez-Gurri** **Project Manager I**	Reviewed / Approved by: **City of Fort Lauderdale** **Approved:** _____ **Date:** _____ **(Owner)**

GMP

Assumptions & Clarifications

G) The following items are to be paid or performed by the City, and are currently excluded from the GMP estimate. These items can be included upon request.

1) Building permits, trade permits, inspection costs, including overtime inspections, processing fees, impact fees, right of way permits. (Reinspection costs to be paid by Moss / trade contractors).
2) Utility fees and deposits, including costs for permanent meters
3) Water, Sewer, DERM, or processing fees associated with the civil work
4) Environmental / Geotechnical studies or investigations
5) Design fees
6) City soft cost and legal fees
7) Leasing/easements at adjacent properties
8) Property survey and description
9) Road or sidewalk usage fees
10) Furniture fixture & equipment (FF&E), including installation or unloading
11) Interior Fixed Screens Type B18 on HQ A-6-6-01 (B19 on HQ A-2-2-3B)
12) Roof Window Washing Anchors/ Roof Davits
13) Cafeteria Kitchen Equipment, Future Kitchen Exhaust Fan /Fitness Equipment
14) Residential Appliance (Microwave, Refrigerators, Coffee Makers, Free Standing Ice Makers, Washing Machine & Dryers,
15) Cold Storage Environmental Chamber
16) Drying Chambers New and Relocation
17) Scissor Lift / Recycle Container / Dumpster / Free Standing Ice Makers / Plotter
18) Free Standing Trophy Cases E8 & E9
19) High Density Shelving / Movable Storage / Metal Lockers L-4, L-5, L-9, L10 and L11
20) Furnishing Fume Hoods
21) Fume Hoods Base Steel Cabinets and Countertop
22) Cost to furnish and install transformers and associated feeders by FP&L for permanent power services.
23) 5G antenna pole to be relocated by AT&T. See SP101 for proposed pole location
24) CD-102 Communication lines to be relocated (Comcast/AT&T) these are overhead lines to be removed by Comcast & AT&T
25) CD-102 and CD-103 the existing Light poles on these sheets to be relocated by FPL
26) Low Voltage including Cameras, Access Controls/Card Readers, AV Speakers & TVs, Audio, Visual & Sound, etc.
27) Other Low Voltage Equipment (City Provided Equipment; Credentials-Cards; Electronic Access Control Servers & Software; Custom Display (Video walls, Smart boards, Monitor, Screens & Projectors), Servers & Equipment)
28) HQ-A7-1-03 detail 4A for Cove light at Skylight (Skylight was eliminated)

Cafeteria Vendors

QTY	Baring Equipment Material		Edward Equipment Material		QTY	Notes / COMMENTS
1	Exhaust Hood	$10,607.00	$8,397.92	Exhaust Hood	1	
1	Exhaust & Supply Fan	$11,134.00	14,934.11	Exhaust & Supply Fan	1	
1	Fire Suppression System	Included With Exhaust Hood	5,070.02	Fire Suppression System	1	
1	Charbroiler, Gas, Countertop	$7,763.00	$7,962.00	Charbroiler, Gas, Countertop	1	
1	60" Range; 6 Burners; 24" Griddle; 24" Space Saver Oven; 36" Oven	$18,884.00	$18,490.39	60" Range; 6 Burners; 24" Griddle; 24" Space Saver Oven; 36" Oven	1	
1	Dishwahser, Undercounter	$6,450.00	$6,717.27	Dishwahser, Undercounter	1	Plumbing Note: Water Softner On Both Hot & Cold Water Lines Recommended.
1	3-Compartment Pot Sink, Freestanding	$6,559.00	$1,616.08	Undermount Sink, 3 Compartment	1	
2	Ice Maker With Bin, Cube-Style	$7,344.00	$5,586.57	Ice Maker With Bin, Cube-Style	1	
1	Equipment Stand (36"; Wheels)	Included With Charbroiler	$0.00	Equipment Stand (36"; Wheels)	0	
1	Blue Hose Gas Connector Kit	$450.00	$0.00	Blue Hose Gas Connector Kit	0	
2	Blue Hose Gas Connector Kit	$900.00	$0.00	Blue Hose Gas Connector Kit	0	
1	Serving Counter (Custom ; 10SQFT)	$4,389.00	$0.00	Servicing Counter	0	
1	Serving Counter (Custom: 'L" Shape: 82" x 25", 145" x 25", 34" (H)	$26,858.00	$0.00	Servicing Counter	0	
1	Island Counter (190" x 50" x 34" H)	$48,155.00	$0.00	Island Counter	0	
1	Deck Mounted Faucet	$129.00	$0.00	Deck Mounted Faucet	0	
2	Wall / Splash Mount Facet	$468.00	$0.00	Wall / Splash Mount Facet	0	
2	Reach-In Dual Temp Cabinet (36" Freezer With Built In Ice Maker)	$37,916.00	$0.00	Reach-In Dual Temp Cabinet	0	
2	Water Filtration System (For Ice Machines)	$468.00	$0.00	Water Filtration System, Ice Machines	0	
0	Undermount Sink	$0.00	$455.69	Undermount Sink	1	
0	Reach-In Refrigerator	$0.00	$3,884.87	Reach-In Refrigerator	1	
0	Reach-In Freezer	$0.00	$4,653.00	Reach-In Freezer	1	
0	Undercounter Refrigerator	$0.00	$3,282.11	Undercounter Refrigerator	1	
0	Microwave	$0.00	$1,406.31	Microwave	1	
0	Walkin Cooler	$0.00	$18,861.70	Walkin Cooler	1	
Baring Material Subtotal		$188,474.00	$101,318.04	Edward Material Subtotal		
	Baring Equipment Installation		**Edward Equipment Installation**			
1	Fire Suppresssion System Installation	$11,175.00	$5,005.00	Fire Suppresssion System Installation	1	
1	Hood & Fan Installation	$77,423.00	$65,625.00	Hood & Fan Installation	1	
1	Cafeteria Equipment Installation	$14,412.00	Included With Line Items #34 & #35	Cafeteria Equipment Installation	0	
0	Walkin Installation	$0.00	$7,800.00	Walkin Installation	1	
0	Walkin Installation	$0.00	$9,600.00	Walkin Installation	1	
1	Freight, Warehousing & Delivery	$6,305.00	$1,650.00	Equipment Warhousing Only	1	
0	Exhaust Hood/Exhaust / Supply Freight	Included In Line Item #34 Above	1,203.84	Exhaust Hood/Exhaust / Supply Freight	1	
0	Exhaust Hood/Exhaust / Supply Tax	Included In Line Item #34 Above	7,016.51	Exhaust Hood/Exhaust / Supply Tax	1	
1	7% Tax (Equipment & Freight)	$11,637.00	$12,026.24	7% Tax (Equipment & Freight)	1	
Baring Installation Subtotal		$120,952.00	$109,926.59	Edward Installation Subtotal		
Baring Grand Total		**$309,426.00**	**$211,244.63**	**Edward Grand Total**		

3249 S.W. 42nd Street
Fort Lauderdale, FL 33312
Phone: (954) 327-6700
Fax: (954) 327-6781

BARING INDUSTRIES, INC.

March 15, 2024

Mr. Michael Perez-Gurri
MOSS & ASSOCIATES

RE: Fort Lauderdale Police Headquarters - Cafeteria Serving 2002
Section 114000 – Food Service Equipment

Dear Mr. Perez-Gurri,

Thank you for your consideration of Baring Industries and the opportunity to submit a proposal to be the **Food Service Equipment Contractor** for this project.

Our pricing is as follows:

Price For Equipment:	**$ 188,474.00**
Fire Suppression System(s):	**$ 11,175.00**
Freight, Warehousing & Delivery:	**$ 6,305.00**
Equipment Installation:	**$ 14,412.00**
Hood & fan package turnkey installation:	**$ 77,423.00**
7% Tax (Equipment & Freight):	**$ 11,637.00**
Total:	**$ 309,426.00**
Performance & Payment Bond (if required):	**$ 4,852.00**
VE Alternate Suggestions	**Savings**
All exposed stainless-steel counters in lieu of millwork fronts:	**$ (17,305.00)**

About our Pricing

Our proposal is based on Volume 3 of 3 permit set drawings titled "1C. FLPH - Headquarters_Permit Set_06.10.22 - COMBINED" dated 6/10/22 as prepared by AECOM.

There were no addenda to review during the bidding process.

Please note, if we are awarded the contract for this project, taxes cannot be shown as a separate cost in the contract, but will be incorporated into the itemized pricing in the schedule of values.

This price proposal is valid for ***30 days***, for shipment by ***Q2 2024***.

Baring Terms

25% mobilization and engineering submittal fees due upon signed contract or purchase order.

100% of factory deposits (Deposit amounts below do not include tax and is additional):

- Custom fabrication: 35% deposit ($30,087.00) due with purchase order.

70% of the equipment price is due net 30 from date of shipment from respective factories, partial shipments allowed.

5% of equipment retainage is due upon completion of installation, start-up, and sign-off.

70% of freight, warehousing, rigging, delivery, and installation services due in progress payments net 30 of invoice as work is completed, partial billing is allowed.

5% of freight, warehousing, rigging, delivery, and installation due upon completion of installation, start-up, and sign-off.

Notes / Clarifications

Please know that we cannot confirm the General Contractor / Construction Management Contract or Subcontract as requested. After submission of our initial proposal, if Baring is being considered further for the award, we will review the Contract(s) and reply with concerns for discussion and resolution.

Our proposal includes the L-shaped counter, island counter and foodservice related equipment within Cafeteria Serving 2002 area only.

Manufacturers and model numbers were not provided. We have included foodservice equipment based on our knowledge of the intent of what is required and/or desired. If not acceptable, please advise how to proceed.

Considering the state of the project, we are not responsible for any rough-ins, electrical, plumbing and drainage.

Scope of Work

Baring Industries will supply, warehouse, deliver to the jobsite when ready, uncrate, assemble, set in place, level, and secure to wall where applicable, all items listed to be by the kitchen equipment contractor. Equipment will be made ready for other trades. All final utility connections and interconnections are by other trades. Unless specifically noted all work, including deliveries will be performed during normal business hours, Monday through Friday.

Where required by code, work will be performed by a properly licensed company employed by Baring Industries.

We will warranty all items supplied by Baring Industries for one-year parts and labor, plus any extended warranties provided as standard by individual manufacturers. Refrigeration system warranty service will be performed by a local factory authorized service agency. Refrigeration compressors carry an additional four-year part only warranty. All warranty work to be performed during normal business hours. Any after hours or weekend work may require client pay for premium portion of labor charges. Our warranty does not cover the cost of food loss.

All warranties will commence upon start-up with intent of beneficial use.

Faucets and drain assemblies are shipped loose for installation by plumbing trades.

Any roof, wall, or floor penetrations are by others.

Our proposal **does not include** seismic mechanical engineering calculations and seismic installation of equipment.

Hoisting, crane, or elevator costs **are not** included. Our proposal is based on access to a loading dock on jobsite to unload equipment with reasonable access to the location of installation. Vertical hoisting and building access to all floors to be provided by the General Contractor / Owner. Additionally, we will provide equipment specified in nominal dimensions as per industry standards. Any need for rigging, hoisting, or specifically sized components may result in additional cost(s).

Any trash or debris from our work will be taken to a designated area on site for removal by others.

Our proposal includes any permits required to complete our scope of work.

We will be utilizing **non-union** labor for this project.

BIM / Revit Drawings – Not included in our bid

We have **NOT** included in our base bid to provide BIM/Revit type drawings as part of our submittals. Baring industries provides and installs “fixtures” not building utility systems. The utility systems that feed these points of rough-in are provided by the MEP trades, and should be 3D modeled by them. Baring Industries will assist with the coordination of these points of rough-in with the other trades, as is required by Division 114000.

Servery Counters

Our proposal includes supply and installation of the servery counters, as shown on the drawings and in details and elevations.

Our proposal includes standard grade Corian solid surface tops.

Our proposal includes laminates millwork finishes.

Our proposal includes electrical sub panels with all items pre-wired as specified and shown on food service equipment drawings.

All utility connections, final and interconnections, are by other trades.

Where required, Baring Industries will supply a **standard** color laminate by Wilsonart or Nevamar on equipment or counters we are providing that do not specifically state what finish is required. If special colors or finished laminates are chosen, an up-charge will be required.

Exhaust Hoods

Our proposal includes supply and hanging of the exhaust canopies, exhaust and supply fans, and ductwork, made ready for final connections by others.

Where required by code, this work will be performed by a properly licensed company employed by Baring Industries.

Structural support for hoods is by others. We will supply all hanging material to attach to the structure up to 20' AFF for our scope of work. Verification that the structure above was engineered to accept weight of the hoods is by others.

Our proposal **includes** closure panels – up to 18" – between the top of the hood and the finished ceiling.

Fire Protection System

Our proposal includes supply and installation of the fire protection system for the exhaust hoods as specified. All utility connections, final and interconnections, are by other trades.

Where required by code, this work will be performed by a properly licensed company employed by Baring Industries.

Our proposal **does not include** K-Class fire extinguishers.

We will supply the required mechanical or electrical gas valves up to 2" in diameter, installation is provided by others. Should larger gas valves be required, additional cost may apply.

The permit, shop drawing(s), one system pre-test, and one local fire department test is included in our pricing. Cost for overtime pre-testing and fire department test inspections are not included.

Our proposal includes **non-union** labor for this work.

Energy Management System

Baring will provide and install the control panel and hood sensors. We will provide, for installation by others, the grease sensor in the ducts and the variable frequency drives (VFDs).

Where required by code, this work will be performed by a properly licensed company employed by Baring Industries.

All utility connections, final and interconnections, are by other trades.

Any connections from the hood control panel to the building management system and fire suppression system are to be supplied and installed by others.

Water Filters

Our proposal **includes** water filters for items included in our scope of work. Water filters for vendor-supplied equipment is provided by others.

Closing

Michael, we are confident that we have met the intent of the drawings in this proposal.

We hope you find this proposal complete and competitive. Baring Industries looks forward to serving as the kitchen equipment contractor on your team for this exciting project.

Please feel free to call me to discuss any questions or concerns you may have.

Sincerely,

BARING INDUSTRIES, INC.



William Toledo | Project Manager
william.toledo@baring.com

BARING INDUSTRIES

03/15/2024 241055

Quote

Project: Fort Lauderdale Police HQ - Cafeteria
Serving 2002
Fort Lauderdale, FL

From: Baring Industries, Inc.
Adriana Marino
3249 SW 42nd St.
Ft. Lauderdale, FL 33312-6810
(954)327-6700
(954)327-6781 (Fax)
adriana.marino@baring.com

Item	Qty	Description	Sell	Sell Total
2.2.12	1 ea	**CHARBROILER, GAS, COUNTERTOP** Jade Range (Middleby) JB-24 Supreme™ Charbroiler, gas, countertop, 24", cast iron radiants & grates, infinite manual controls, built-in grease channels, stainless steel sides, front & plate shelf, adjustable legs, 60,000 BTU, CSAus, NSF	$7,763.00	$7,763.00
	1 ea	NOTE: All units are fully welded with heavy duty construction, stainless steel sides, front and top are standard		
	1 ea	One year part & labor warranty		
	1 ea	Gas type to be specified		
	1 ea	3/4" Rear connection, standard		
	1 ea	3/4" Gas regulator supplied with range		
	1 ea	ST-36 Equipment Stand, 36", open base with bottom shelf, 14 gauge stainless steel top & bottom shelf, NSF		
	1 ea	Set of four casters (2 with brakes)		
2.2.12.1	1 kt	**BLUE HOSE GAS CONNECTOR KIT** Dormont Manufacturing 1675KIT2S48PS Dormont Blue Hose™ Moveable Gas Connector Kit, 3/4" inside dia., 48" long, covered with stainless steel braid, coated with blue antimicrobial PVC, (1) SnapFast® QD, (2) Swivel MAX®, (1) full port valve, (1) pair Safety Set® with hardware mounting options, limited lifetime warranty	$450.00	$450.00
2.2.13	1 ea	**RANGE, 60", 6 BURNERS, 24" GRIDDLE W 24" SPACE SAVER OVEN & 36 OVEN** Jade Range (Middleby) JBR-6-24G-2436 Bistro™ Restaurant Range, gas, 60", (6) 30,000 BTU open burners left, (1) 24" griddle right, thermostatic controls, (1) 24" space saver oven, (1) 36" standard oven, (1) chrome plated rack per oven, stainless steel front, sides, tray bed & stub back, 6" adjustable legs, 288,000 BTU, CSAus, NSF	$18,884.00	$18,884.00
	1 ea	NOTE: All units are fully welded with heavy duty construction, stainless steel sides, front and top are standard		
	1 ea	One year part & labor warranty		
	1 ea	Natural gas, specify if elevation over 2000 ft.		
	2 ea	(2) 3/4" Rear connections, standard		
	2 ea	(2) 3/4" Gas regulator supplied with range		
	1 ea	S-60-BIST Bistro™ 60" Single Deck High Shelf, stainless steel		

BARING INDUSTRIES

Item	Qty	Description	Sell	Sell Total
	2 ea	Additional oven racks for a total of (2) racks per oven		
	1 ea	Set of six casters (3 with brakes)		
2.2.13.1	2 kt	**BLUE HOSE GAS CONNECTOR KIT** Dormont Manufacturing 1675KIT2S48PS Dormont Blue Hose™ Moveable Gas Connector Kit, 3/4" inside dia., 48" long, covered with stainless steel braid, coated with blue antimicrobial PVC, (1) SnapFast® QD, (2) Swivel MAX®, (1) full port valve, (1) pair Safety Set® with hardware mounting options, limited lifetime warranty	$450.00	$900.00
2.2.16	1 ea	**EXHAUST HOOD** Advanced Hood Systems, LLC Exhaust hood: 5424AH-ND-2-PSP-F - 11ft 0" Long Exhaust-Only Wall Canopy Hood with 14" Wide Front Perforated Supply Plenum with Built-in 3" Back Standoff - 430 SS Where Exposed - Insulation for the PSP Housing - Front - Fire Cabinet on the Left Side 12.00" Width x 54.00" Length x 24.00" Height (Additional charges may apply for cabinet if not sold with fire system) - FILTER - 20" tall x 16" wide Kleen-Gard Stainless Steel Baffle Filter with Handles and Bottom Hanging Hook, UL Classified - L55 Series E26 Canopy Light Fixture - High Temp Assembly, Includes Clear Thermal and Shock Resistant Globe (L55 Fixture), Bulbs By Others - Extra Fixtures- L55 Series E26 Canopy Light Fixture - High Temp Assembly, Includes Clear Thermal and Shock Resistant Globe (L55 Fixture) - EXHAUST RISER - Factory installed 12" X 12" X 4" - SUPPLY RISER - 12"x 20" Supply Riser with Volume Dampers - 1/2 Pint Grease Cup New Style, Flanged Slotted - FIELD WRAPPER 18.00" High Front, Left, Right - Electrical Package Installation in Utility Cabinet by Plant. - BACKSPLASH 122.00" High X 180.00" Long 430 SS Vertical (Includes End Caps & Divider Bars) - Parts required to mount riser sensor 6 inches beside riser. Sensor installed directly in line with the center of riser and in center of the plenum space front to back. - RIGHT WIDE VERTICAL END PANEL 42" Top Width, 36" Bottom Width, 80" High Insulated 430 SS - LEFT WIDE VERTICAL END PANEL 42" Top Width, 36" Bottom Width, 80" High Insulated 430 SS SC-311110MA 3 Phase w/ control for 1 Exhaust Fan, 1 Supply Fan, Exhaust on in Fire, Lights out in Fire, Relay On/Off with Supply Fan, Fan(s) On/Off Thermostatically Controlled. Room temperature sensor	$10,607.00	$10,607.00

BARING INDUSTRIES

Item	Qty	Description	Sell	Sell Total
		shipped loose for field installation. INVERTER DUTY 3 PHASE MOTOR REQUIRED FOR USE WITH VFD. Includes 1 Duct Thermostat kit. - ESV112N02YXB571 - Variable Frequency Drive - 1-1/2 HP Max., 200/240 V, Single or Three Phase Input, 6.0 A Max., NEMA 1 Enclosure, with 2RJ-45 FOR MODBUS - ESV152N02YXB571 - Variable Frequency Drive - 2 HP Max., 200/240 V, Single or Three Phase Input, 7.0 A Max., NEMA 1 Enclosure, with 2RJ-45 FOR MODBUS - PSP thermostat kit, includes 1x duct thermostat, quick seal, and j-box for monitoring of PSP discharge temperature. - VERIZON CELLULAR KIT, WIRED ANTENNA AND VERIZON DATA FOR 1 YEARS. - Digital Prewire Lighting Relay Kit. Includes hood lighting relay & terminal blocks. Allows for up to 1400W of lighting each. - Thermistor CABLE - 18/2 AWG GREEN WHITE, plenum rated. USED for thermistor duct stat. Per Foot Price.		
2.2.16.1	1 ea	**EXHAUST & SUPPLY FANS** Advanced Hood Systems, LLC Exhaust & supply fans Exhaust fan: AH-DU180HFA High Speed Direct Drive Centrifugal Upblast Exhaust Fan with, disconnect switch and 18-3/4" wheel. Exhaust Fan handles 2200 CFM @ -1.200" wc ESP, Fan runs at 1092 RPM. Exhaust Motor: 2.000 HP, 3 Phs, 208 V, 60 Hz, 6.1 FLA, ODP, Premium (E-Plus3) Eff. - Grease Cup for kitchen-duty centrifugal exhaust fans, Box Dimensions 17-1/8 L X 5-1/16 W X 3-3/4 H (20 Gauge) (Includes Down Spout) - Miami Dade Impact and Wind Load Certification +150 / -150 PSF - Miami Dade County Product Control Approved. Florida Building Code approval. Roof & Wall Mount Exhaust Curbs up to 20" high must be 20 gauge Aluminized. Roof & Wall Mount Exhaust Curbs above 20" high up to 42" high must be 18 Gauge Aluminized. - KEF-1 Curb CRB26.5x20E On Fan #1 Flat Curb - Hinged Base for Curb. Standard Hinge attached to curb. Used on Fans with wheels 20 inches or smaller. 12 GA Galvanized. - Vented Base for Curb Supply fan: AH-A1-15D-MPU Supply Unit with 15" Mixed Flow Direct Drive Fan in Size #1 Housing Supply Fan handles 1760 CFM @ 0.500" wc ESP, Fan runs at 1739 RPM. Supply Motor: 1.500 HP, 3 Phs, 208 V, 60 Hz, 4.4 FLA, ODP, Premium (E-Plus3) Eff. Down Discharge - Air Flow Right -> Left - Sloped Filtered Intake for Size #1 Modular Untempered Supply Unit.	$11,134.00	$11,134.00

Item	Qty	Description	Sell	Sell Total
		21.813" Wide x 44.375" Long x 23.375" High. Includes 2" MV EZ Kleen Metal Mesh Filters. - Down Discharge Construction for Size 1 Untempered Direct Drive AHUs - Miami Dade Impact and Wind Load Certification +30 / -130 PSF - Miami Dade County Product Control Approved. Florida Building Code approval. Roof Mount Exhaust Curbs up to 20" high must be 18 gauge Aluminized. - Support shell for Size 1 Modular Package Unit. Includes control vestibule. Includes condenser supports. Does not include return air or inlet air damper. - 3 Ton, Single Circuit Modular Packaged Cooling Option for Size 1 Modular Packaged Unit. Includes Condenser, DX Coil, Filter/Dryer Kit, Thermal Expansion Valve, R410A Refrigerant, and Refrigerant Piping. (1,100 to 1,800 cfm) When ordered with opposite airflow condensers access and coil piping will remain in standard position. Drain and sleds will move to the opposite side. Any other change will require CLI. CONDENSERS REQUIRE SEPARATE 208V, 3 PHASE POWER SUPPLY UNLESS ORDERED WITH SINGLE POINT CONNECTION. Coil = 2EZ1001N - Insulated Blower Housing Sizes 1-2 Commercial Modular - Control Package for Mod Package Unit Cooling Only Unit. Includes airflow proving switch, RTUlink-ACHP board and terminal blocks. - Separate 120VAC Wiring Package for Make-Up Air Units. Option must be selected when mounting VFD in prewire panel or with DCV package. Provides separate 120VAC input to supply fan. This 120V signal must be run by electrician from DCV to mua switch. - KSF-1 Curb CRB21X113X20INS Insulated On Fan #2 Flat Curb - Full Bottom Curb Corner. Base flange corners fully welded or staked by factory. - Steel Clip for Miami Dade MPU Curb Mounts		
2.2.16.2	1 ea	**FIRE SUPPRESSION SYSTEM** Ansul Fire Protection INCLUDED IN INSTALLATION Fire suppression system: TANK-SP-2 Tank Fire Suppression 8 gallon Fire System in Utility Cabinet (includes pre-piped hood(s) with electric detection, tank(s), 24 VDC release mechanism, fire system agent, pressurized tanks, and electric pull station). (Formerly CAS-EWC). Includes piping for hood: 1. - Tank-based Fire Protection System equipped with Electronic Detection utilizing CORE board as a Listed Release Mechanism. Installed in Hood Utility Cabinet with integral hood prewire panel. - Pressure Switch - Monitors Tank Pressure, Supervised Signal, TANK		<Included>

BARING INDUSTRIES

Item	Qty	Description	Sell	Sell Total
		FIRE SUPPRESSION - SC-EGVA2 GAS VALVE - 2" Electrical Shutoff Valve for use with HMI reset, 110V, 60Hz (#8214280). Includes upstream strainer assembly.		
CS-1	1 ea	**SERVING COUNTER** Custom Fabricator CUSTOM Solid surface counter top on wall mounted brackets: 1/2" x 4" Back Splash ~STANDARD GRADE CORIAN Options Included: (1) Standard Grade Corian (10 SqFt) (1) 3/4" Exterior Grade Plywood Sub Top (5 LnFt) (3) Rakks Brackets, EH-1818 (1) Set & Seam	$4,389.00	$4,389.00
CS-3	1 ea	**SERVING COUNTER** Custom Fabricator CUSTOM Counter, 'L'-Shaped, 82" x 25", 145" x 25", 34" High, 1/2" x 4" Back Splash ~STANDARD GRADE CORIAN, STANDARD GRADE LAMINATE Specifications: (unless otherwise noted in options below) #16 Ga. Sub-Top, Coved Corner Construction, with #18 Ga. S/S Semi-Enclosed Body, #18 Ga. S/S Bottom & Intermediate Shelves (where applicable), Galv. Channel & Angle Reinforcement, 1-5/8" O.D. S/S Legs with S/S Adjustable Bullet Feet. Options Included: (1) Standard Grade Corian (34 SqFt) (4) Custom Drawers (4) Soft Close Drawer Slides (8) Laminated Hinged Doors (Millwork) (12) Outwater Plastics Pull 20096-SS (4) Undershelf Adjustable, in Cabinet (1) Cabinet Galv. Base/Curb (18.9 LnFt) (1) Field Joint, Mechanical (bolted) (1) Set & Seam	$26,858.00	$26,858.00
CS-4	1 ea	**ISLAND COUNTER** Custom Fabricator CUSTOM Island Counter, 190" x 50" x 34" High ~STANDARD GRADE CORIAN, STANDARD GRADE LAMINATE Specifications: (unless otherwise noted in options below) #14 Ga. S/S Top, Coved Corner Construction, with #18 Ga. S/S Semi-Enclosed Body, #18 Ga. S/S Bottom & Intermediate Shelves (where applicable), Galv. Channel & Angle Reinforcement, 1-5/8" O.D. S/S Legs with S/S Adjustable Bullet Feet. Options Included:	$48,155.00	$48,155.00

BARING INDUSTRIES

Item	Qty	Description	Sell	Sell Total
		(1) Standard Grade Corian (66 SqFt) (2) Double Bowl Drop-in Sink (2) Drain, Basket Waste (1) FAUCET BY OTHERS (10) Custom Drawers (10) Soft Close Drawer Slides (22) Laminated Hinged Doors (Millwork) (32) Outwater Plastics Pull 20096-SS (10) Undershelf Adjustable, in Cabinet (1) Cabinet Galv. Base/Curb (16 LnFt) (1) Set & Seam (6) Electrical, 120V/20A Receptacle, Cover, J-Box		
CS-4.1	1 ea	**DECK MOUNT FAUCET** T&S Brass B-1141 Faucet, gooseneck nozzle, deck mount, quarter-turn Eterna cartridges, lever handles, low lead, ADA Compliant	$129.00	$129.00
2.2.18	1 ea	**DISHWASHER, UNDERCOUNTER** Hobart CUL-1 Centerline Dishwasher, undercounter, 22-11/16"W x 24"D x 32-5/16"H, (24) racks/hr, low temperature chemical sanitizing, fresh water rinse, .84 gal/rack, delime notification and cycle, service diagnostics with error notifications, soft start, detergent, rinse aid, & sanitizer pumps, (1) chemical sensing indicator for sanitizer, 120v/60/1-ph, 17.5 amps, ships with (1) peg rack and 1 combo rack, cULus, NSF (Pricing options available, please contact your local rep for more information) (NET price shown)	$6,450.00	$6,450.00
	1 ea	Standard warranty - 1-Year parts, labor & travel time during normal working hours within the USA		
	1 ea	CORD-PWRKIT-CHLX Power Cord Kit -LXEC, 1-ph, NEMA 5-20P, plug included		
	1 ea	NOTE: Hobart suggests adding a water softener. Hobart recommends a total of 2 water softeners (one for the incoming hot water line, one for the incoming cold water line) for all Centerline dishwashers.		
	1 ea	DWT-CUH Drain water tempering kit for Centerline CUH (net)		
2.2.41	1 ea	**3-COMPARTMENT POT SINK** Custom Fabricator CUSTOM 3 Compartment Pot Sink: 68" x 30" x 34" High, with Backsplash, 7" Left Drainboard, 7" Right Drainboard, Crossbracing; Bowls: 18"L x 14"D Specifications: (unless otherwise noted in options below) #14 Ga. S/S Coved Corner Construction, with S/S Reinforcement, 3" High Raised Roll Rim, 1-5/8" O.D. S/S Legs with S/S Adjustable Bullet Feet, Crossbracing: 1-1/4" O.D. S/S Tubing Options Included:	$6,559.00	$6,559.00

BARING INDUSTRIES

Item	Qty	Description	Sell	Sell Total
		(2) FAUCET BY OTHERS (3) Drain, Rotary Waste with Connected Overflow (3) Rotary Handle Support Bracket		
2.2.41.1	2 ea	**WALL / SPLASH MOUNT FAUCET** T&S Brass B-0231 Sink Mixing Faucet, wall mount, 8" centers, 12" swing nozzle, lever handles, quarter-turn Eterna cartridges, 1/2" NPT female inlets, low lead, ADA Compliant	$234.00	$468.00
	2 ea	B-WH4H-NS Wrist Action Handle, 4" long, hot index & screw		
	2 kt	B-0230-K Installation Kit, (2) 1/2" NPT nipples, lock nuts & washers, (2) short "Ell" 1/2" NPT female x male		
EQ-3	2 ea	**REACH-IN DUAL TEMP CABINET** True Mfg. – Residential TR-36FRZ-L-SS-IM-C Upright Freezer Column with built in Ice Maker, one-section 36"W, self-contained, left hinged stainless steel solid door, LED interior lighting, stainless steel interior & exterior, R-600A Refrigerant, 115v/60/1-ph, 2 amps, NEMA 5-15P, cULus, Made in USA	$18,958.00	$37,916.00
	2 ea	3 year parts and labor warranty, standard		
	2 ea	6 year sealed system parts and labor warranty, standard		
	2 ea	Stainless Steel Standard Hardware handles, hinges, and logo		
	2 ea	Side and Back finish: Galvanized steel, standard		
	2 ea	Stainless Steel interior, standard		
	2 ea	Leg levelers (front) and Castors (rear), standard		
	2 ea	30, 36, 42 or 48 End Panel Kit With Left and Right Stainless Panels		
	2 ea	90 Degree Door Stop – RIGHT		
EQ-3.1	2 ea	**WATER FILTRATION SYSTEM, FOR ICE MACHINES** Everpure EV932401 Insurice® Water Filtration System, Insurice® Single-i2000², Single, (1) i2000² Micro-Pure® II Precoat primary filtration cartridge, reduces chlorine, taste & odor, inhibits scale, outlet pressure gauge, flushing valve, 9,000 gallons, 1.67 gpm, 0.5 micron, 3/8" inlet, 3/8" outlet, NSF 42 & 53 (EV932401)	$234.00	$468.00
EQ-7	2 ea	**ICE MAKER WITH BIN, CUBE-STYLE** Ice-O-Matic ICEU220HA ICE Series™ Cube Ice Maker, cube-style, undercounter, air-cooled, self-contained condenser, approximately 238 lb/108 kg production/24 hours, 70 lb. built-in bin, half-size cube, cULus, NSF, CE	$3,672.00	$7,344.00
	2 ea	3 yr. parts & labor warranty, standard		
	2 ea	5 yr. parts on the compressor warranty, standard		
	2 ea	5 yr. evaporator warranty, standard		
	2 ea	115v/60/1-ph, 11.6 amps, standard		
	2 ea	IFI4C In-line Water Filter Cartridge, single, designed for use with ice		

BARING INDUSTRIES

Item	Qty	Description	Sell	Sell Total
		makers, with IsoNet® scale inhibitor, 1/4" compression, for max. cube capacity 600 lb/day, 1.0 gpm, 10 micron (volume pricing available 40+ cartridges), NSF		
		SUBTOTAL		$188,474.00
	1 ea	**FREIGHT** FREIGHT CHARGES Freight, warehousing & delivery	$6,305.00	$6,305.00
	1 ea	**INSTALLATION** INSTALLATION Equipment installation	$25,587.00	$25,587.00
	1 ea	**INSTALLATION** INSTALLATION Hood & fan package turnkey installation	$77,423.00	$77,423.00
	1 ea	**TAX** TAX 7% tax (Equipment & freight) • If tax exempt, please provide tax exemption certificate.	$11,637.00	$11,637.00
	1 ea	**P&P** Performance & Payment Bond Performance & payment bond, add if required	$4,852.00	<Optional>
		Total		$309,426.00

BARING INDUSTRIES

Project:
Fort Lauderdale Police HQ
- Cafeteria Serving 2002
Fort Lauderdale, FL

From:

Baring Industries, Inc.
Adriana Marino
3249 SW 42nd St.
Ft. Lauderdale, FL 33312-6810
(954)327-6700
(954)327-6781 (Fax)
adriana.marino@baring.com

To:

BARING INDUSTRIES

Submittal Sheet

ITEM# 2.2.12 - CHARBROILER, GAS, COUNTERTOP (1 EA REQ'D)

Jade (Middleby) JB-24

Supreme™ Charbroiler, gas, countertop, 24", cast iron radiants & grates, infinite manual controls, built-in grease channels, stainless steel sides, front & plate shelf, adjustable legs, 60,000 BTU, CSAus, NSF

ACCESSORIES

Mfr	Qty	Model	Spec
Jade (Middleby)	1		NOTE: All units are fully welded with heavy duty construction, stainless steel sides, front and top are standard
Jade (Middleby)	1		One year part & labor warranty
Jade (Middleby)	1		Gas type to be specified
Jade (Middleby)	1		3/4" Rear connection, standard
Jade (Middleby)	1		3/4" Gas regulator supplied with range
Jade (Middleby)	1	ST-36	Equipment Stand, 36", open base with bottom shelf, 14 gauge stainless steel top & bottom shelf, NSF
Jade (Middleby)	1		Set of four casters (2 with brakes)

JADE SUPREME™ RESTAURANT SERIES

RADIANT CHAR BROILERS

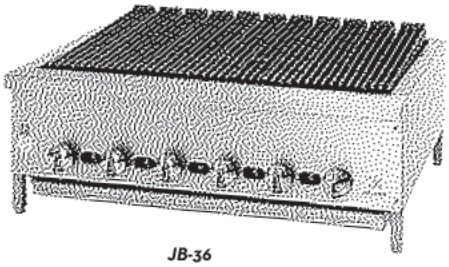

JB-36

MODEL NO.	DESCRIPTION
❑ JB-12	12" WIDE CHAR BROILER
❑ JB-18	18" WIDE CHAR BROILER
❑ JB-24	24" WIDE CHAR BROILER
❑ JB-30	30" WIDE CHAR BROILER
❑ JB-36	36" WIDE CHAR BROILER
❑ JB-42	42" WIDE CHAR BROILER
❑ JB-48	48" WIDE CHAR BROILER
❑ JB-54	54" WIDE CHAR BROILER
❑ JB-60	60" WIDE CHAR BROILER
❑ JB-72	72" WIDE CHAR BROILER

❑ FLOOR MODEL	ADD "-F" TO END OF MODEL NUMBER

Example: JB-36-F Floor model, 36" wide

DESCRIPTION

Radiant Char broiler to be Model # JB-_____ manufactured by Jade Range. Provide heavy duty cast iron grates with built in grease guides. One 15,000 BTU/hr burner every 6" of broiler width controlled by infinite gas valves. Heavy duty cast iron burner radiants. Furnish 12 gauge all welded firebox. Provide two separate 14 gauge steel drip pans. To be of 14 gauge all welded construction with stainless steel front, plate shelf, gas tubing throughout and legs with adjustable feet. Each burner to be furnished with one stainless steel pilot. Provide 14 gauge welded drip tray. Unit to be provided with 3/4" gas regulator.

SPECIFY TYPE OF GAS WHEN ORDERING.

SPECIFY ALTITUDE WHEN ABOVE 2,000 FT.

STANDARD FEATURES

- Stainless steel sides, front, plate shelf
- Heavy duty 4 bar cast iron top grates with built in grease guides that channel away excess fat and reduce flaring
- One 15,000 BTU/hr burner every 6" broiler
- Infinite control manual gas valves at each burner for precise heat control
- Heavy duty cast iron burner radiants
- 12 gauge all welded firebox construction
- 2 separate 14 gauge steel drip pans to control flare ups
- Stainless steel gas tubing throughout
- Stainless steel pilot tips resist corrosion
- Stainless steel legs with adjustable feet welded to body
- 3/4" gas regulator (shipped loose, MUST be installed for proper operation.)

OPTIONS & ACCESSORIES

❑ Stainless steel wrap around splash 3" high ❑ 6" high ❑
❑ Stainless steel 8" extended plate shelf
❑ 8" deep cutting board, ❑ Poly
❑ Fish grate
❑ 6" casters, front two locking (floor models only)
❑ 36" flex hose with quick disconnect & restraining device
❑ 48" flex hose with quick disconnect & restraining device

WWW.JADERANGE.COM

JADE RANGE, LLC., A MIDDLEBY COMPANY • 2650 Orbiter Street • Brea, CA 92821 • PHONE: 800-884-5233 FAX: 714-961-2550

Note: In line with their policy to continually improve products, Jade reserves the right to change materials and specifications without notice. PRINTED IN USA

FORM #JSO319 ©2008 JADE RANGE, LLC

RADIANT CHAR BROILERS

JADE SUPREME™ RESTAURANT SERIES

RADIANT CHAR BROILERS

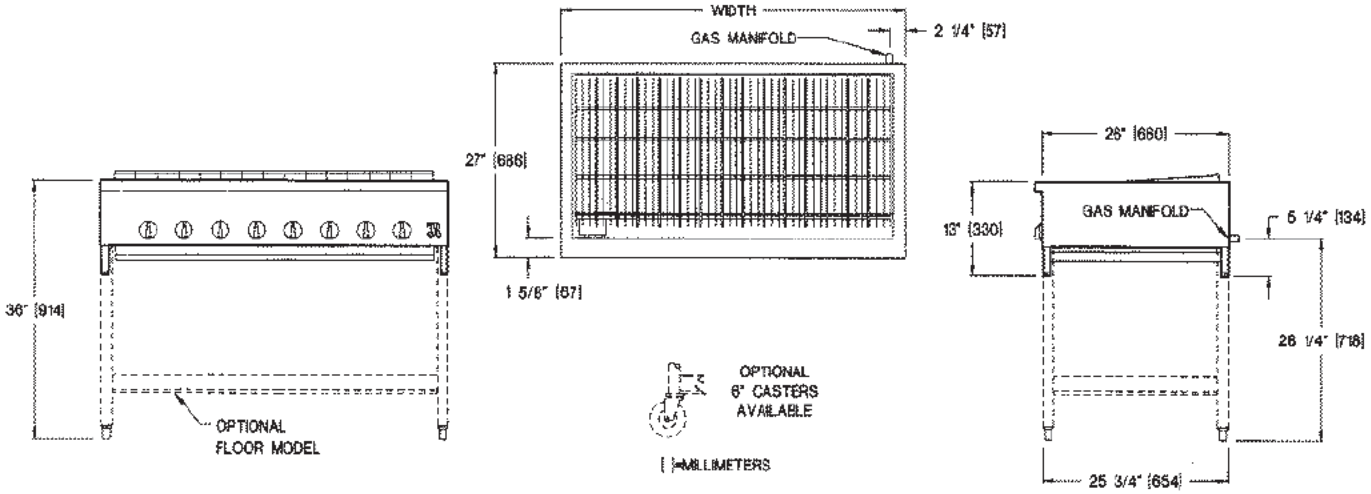

MODEL	BURNERS	BTUS	WIDTH	DEPTH	HEIGHT	APPX. SHP. WT.	APPX. CUBE COUNTER/FLOOR
JB-12	2	30,000	12"	27"	SEE DRAWING	150 LBS.	9/16
JB-18	3	45,000	18"	27"	SEE DRAWING	200 LBS.	11/20
JB-24	4	60,000	24"	27"	SEE DRAWING	250 LBS.	13/24
JB-30	5	75,000	30"	27"	SEE DRAWING	300 LBS.	17/31
JB-36	6	90,000	36"	27"	SEE DRAWING	350 LBS.	19/38
JB-42	7	105,000	42"	27"	SEE DRAWING	400 LBS.	24/43
JB-48	8	120,000	48"	27"	SEE DRAWING	570 LBS.	27/49
JB-54	9	135,000	54"	27"	SEE DRAWING	585 LBS.	30/45
JB-60	10	150,000	60"	27"	SEE DRAWING	600 LBS.	33/62
JB-72	12	180,000	72"	27"	SEE DRAWING	700 LBS.	39/72

* For floor model add "-F" to end of Model #.

NOTE: SPECIFY TYPE OF GAS WHEN ORDERING.

UTILITY INFORMATION:

- 3/4" Connection
- Required operating pressure:
  Natural Gas 5" W.C. minimum
  Propane Gas 10" W.C. minimum
  14" W.C. maximum

Note: This unit must be connected with the gas appliance regulator supplied.

WWW.JADERANGE.COM

JADE RANGE, LLC., A MIDDLEBY COMPANY • 2650 Orbiter Street • Brea, CA 92821 • PHONE: 800-884-5233 FAX: 714-961-2550

Note: In line with their policy to continually improve products, Jade reserves the right to change materials and specifications without notice. PRINTED IN USA

FORM #JSO319 ©2008 JADE RANGE, LLC

JADE SUPREME™ RESTAURANT SERIES

STAINLESS STEEL EQUIPMENT STANDS

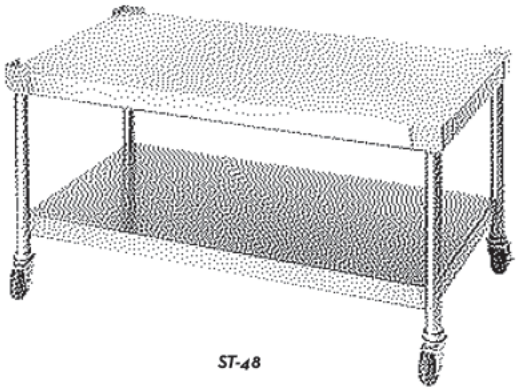

ST-48

DESCRIPTION

Equipment Stand to be Model # ST-_____ manufactured by Jade Range. To have all welded construction, 14 gauge stainless steel top and bottom shelf, heavy gauge round tube legs with adjustable feet.

MODEL NO.	DESCRIPTION
❑ ST-12	12" WIDE STAINLESS STEEL EQUIPMENT STAND
❑ ST-18	18" WIDE STAINLESS STEEL EQUIPMENT STAND
❑ ST-24	24" WIDE STAINLESS STEEL EQUIPMENT STAND
❑ ST-30	30" WIDE STAINLESS STEEL EQUIPMENT STAND
❑ ST-36	36" WIDE STAINLESS STEEL EQUIPMENT STAND
❑ ST-42	42" WIDE STAINLESS STEEL EQUIPMENT STAND
❑ ST-48	48" WIDE STAINLESS STEEL EQUIPMENT STAND
❑ ST-60	60" WIDE STAINLESS STEEL EQUIPMENT STAND
❑ ST-72	72" WIDE STAINLESS STEEL EQUIPMENT STAND
❑ ST-84	84" WIDE STAINLESS STEEL EQUIPMENT STAND
❑ ST-96	96" WIDE STAINLESS STEEL EQUIPMENT STAND

STANDARD FEATURES

- 14 gauge stainless steel all welded construction
- Stainless steel top and bottom shelves
- Heavy gauge stainless steel round tube legs with adjustable feet
- 14 gauge corner stops

OPTIONS & ACCESSORIES

❑ 6" Casters, front two locking

Note: Model # of equipment to mounted on above stand(s) must be specified when stand is ordered.

NSF

WWW.JADERANGE.COM

JADE RANGE, LLC., A MIDDLEBY COMPANY • 2650 Orbiter Street • Brea, CA 92821 • PHONE: 800-884-5233 FAX: 714-961-2550

Note: In line with their policy to continually improve products, Jade reserves the right to change materials and specifications without notice. PRINTED IN USA

FORM #JSO322 ©2008 JADE RANGE, LLC

JADE

STAINLESS STEEL EQUIPMENT STANDS

JADE SUPREME™ RESTAURANT SERIES

STAINLESS STEEL EQUIPMENT STANDS

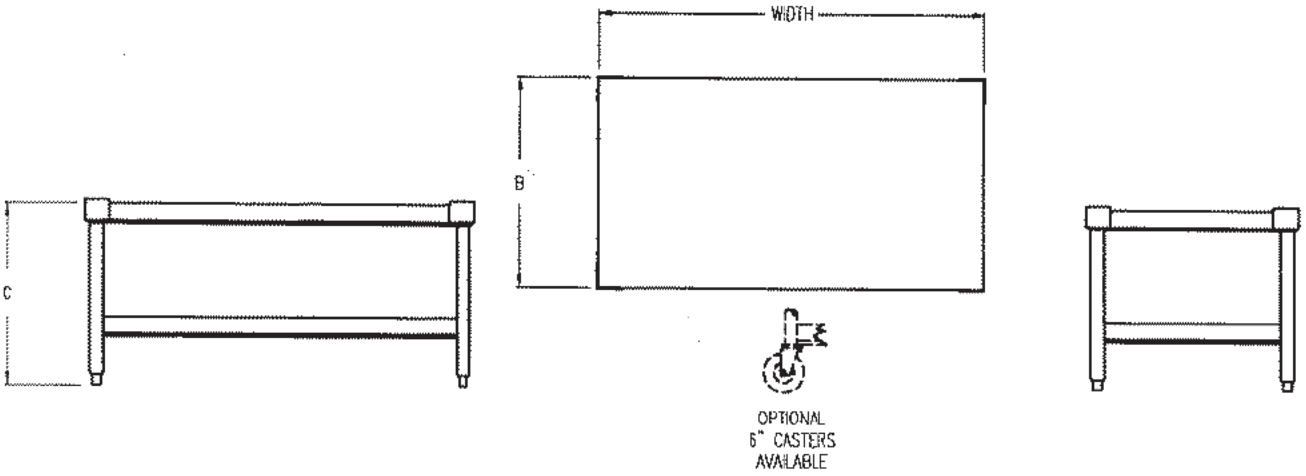

MODEL	WIDTH	APPX. SHP. WT.	APPX. CUBE
ST-12	12"	30 LBS.	13
ST-18	18"	50 LBS.	16
ST-24	24"	60 LBS.	21
ST-30	30"	70 LBS.	23
ST-36	36"	80 LBS.	27
ST-42	42"	90 LBS.	31
ST-48	48"	100 LBS.	35
ST-60	60"	120 LBS.	43
ST-72	72"	140 LBS.	52
ST-84	84"	160 LBS.	60
ST-96	96"	180 LBS.	68

STAND DEPTH AND HEIGHT FOR RESPECTIVE MODEL TYPES

MODEL	DEPTH "B"	HEIGHT "C"
JGT/JGGT	28"	24"
JGM	26"	24"
JHP	26"	24"
JHPE	29"	24"
JB	26"	22"

WWW.JADERANGE.COM

JADE RANGE, LLC., A MIDDLEBY COMPANY • 2650 Orbiter Street • Brea, CA 92821 • PHONE: 800-884-5233 FAX: 714-961-2550
Note: In line with their policy to continually improve products, Jade reserves the right to change materials and specifications without notice. PRINTED IN USA

BARING INDUSTRIES

Submittal Sheet

ITEM# 2.2.12.1 - BLUE HOSE GAS CONNECTOR KIT (1 KT REQ'D)

Dormont 1675KIT2S48PS

Dormont Blue Hose™ Moveable Gas Connector Kit, 3/4" inside dia., 48" long, covered with stainless steel braid, coated with blue antimicrobial PVC, (1) SnapFast® QD, (2) Swivel MAX®, (1) full port valve, (1) pair Safety Set® with hardware mounting options, limited lifetime warranty

Item #2.2.12.1
1675KIT2S48PS
Dormont
CAM #24-0670
Exhibit 1
Page 90 of 288
Baring Industries, Inc.
Fort Lauderdale Police HQ - Cafeteria Serving

Dormont®

Foodservice Moveable Equipment Installation Products

The Dormont Blue Hose™ is the heart of the Safety System, specifically engineered for caster-mounted commercial cooking equipment. The Blue Hose includes an antimicrobial protective PVC coating, and our Stress Guard® technology that makes the hose easier to install and dramatically reduces stress on the hose ends.

The fuel gas codes require the use of an ANSI Z21.69/CSA 6.16 moveable gas connector with all appliances that may or may not utilize casters and, under normal use, are moved on a regular basis for service, positioning or area cleanliness.



STRESS GUARD TECHNOLOGY

Rotation technology reduces stress on both ends of the hose

Stainless Steel Construction
Heavy-duty, flexible, corrugated 304 stainless steel tubing

Stainless Steel Braid
Tight-weave braid prevents corrugations from stretching as equipment is moved

Antimicrobial PVC Coating
Inhibits growth of bacteria, mold and mildew on the gas connector





A Watts Water Technologies Company USA: 6015 Enterprise Drive, Export, PA 15632 • 1-800-DORMONT • Dormont.com

The Dormont Safety System™ is the first and only complete gas equipment connection system specifically engineered for the commercial kitchen. It is a complete system of connection products designed with the safety of your kitchen, the food you serve, your employees, and your business in mind.

The Safety System includes the famous Dormont Blue Hose and our exclusive safety-based fittings - the SnapFast quick-disconnect, the Safety Quik quick-disconnect valve, and the Swivel MAX. Safe, unique, and affordable, the Dormont Safety System provides peace of mind for the gas connections in your commercial kitchen.

Safety Quik
- Prevents user from turning on gas while appliance is disconnected
- Thermal shut-off when internal temperature exceeds 350°F (177°C)

SnapFast
- One-handed quick-disconnect fitting
- Thermal shut-off when internal temperature exceeds 350°F (177°C)

SwivelMAX
- Reduces stress on connector
- Increases kitchen aisle space by allowing connector to be positioned closer to the wall

Restraining Cable
- Prevents transmission of strain to connector
- Provided 1' shorter than the gas connector

Safety-Set
- Ensures cooking equipment is always positioned in design-specified location
- Fast installation with choice of adhesive foam tape or thumbscrews

11/6/14 11:07 AM

Dormont Moveable Commercial Equipment Kits

KIT SOLUTIONS	50 = ½" ID 75 = ¾" ID 100 = 1" ID 125 = 1-¼" ID PART NUMBER	BTU/hr Minimum Flow Capacity*	THE BLUE HOSE™	SnapFast® QUICK-DISCONNECT	Swivel MAX® 1st SWIVEL	Swivel MAX® 2nd SWIVEL	Safety Quik® VALVE	RESTRAINING CABLE
Standard Kit (KIT)[1] The Dormont Blue Hose™ SnapFast Quick-Disconnect Restraining Cable	1650KIT36	77K	√	√				√
	1650KIT48	68K	√	√				√
	1650KIT60	60K	√	√				√
	1675KIT36	218K	√	√				√
	1675KIT48	180K	√	√				√
	1675KIT60	158K	√	√				√
	16100KIT36	379K	√	√				√
	16100KIT48	334K	√	√				√
	16100KIT60	294K	√	√				√
Single Swivel MAX Kit (KITS)[2] The Dormont Blue Hose™ SnapFast Quick-Disconnect One Swivel MAX Swivel Restraining Cable	1650KITS36	72K	√	√	√			√
	1650KITS48	63K	√	√	√			√
	1650KITS60	56K	√	√	√			√
	1675KITS36	203K	√	√	√			√
	1675KITS48	167K	√	√	√			√
	1675KITS60	147K	√	√	√			√
	16100KITS36	353K	√	√	√			√
	16100KITS48	310K	√	√	√			√
	16100KITS60	274K	√	√	√			√
Double Swivel MAX Kit (KIT2S)[3] The Dormont Blue Hose™ SnapFast Quick-Disconnect Two Swivel MAX Swivels Restraining Cable	1650KIT2S36	69K	√	√	√	√		√
	1650KIT2S48	60K	√	√	√	√		√
	1650KIT2S60	54K	√	√	√	√		√
	1675KIT2S36	193K	√	√	√	√		√
	1675KIT2S48	160K	√	√	√	√		√
	1675KIT2S60	140K	√	√	√	√		√
	16100KIT2S36	336K	√	√	√	√		√
	16100KIT2S48	295K	√	√	√	√		√
	16100KIT2S60	261K	√	√	√	√		√
Safety Quik Kit (KITCF)[4] The Dormont Blue Hose™ Safety Quik Quick-Disconnect Restraining Cable	1650KITCF36	77K	√				√	√
	1650KITCF48	68K	√				√	√
	1650KITCF60	60K	√				√	√
	1675KITCF36	218K	√				√	√
	1675KITCF48	180K	√				√	√
	1675KITCF60	158K	√				√	√
	16100KITCF36	379K	√				√	√
	16100KITCF48	334K	√				√	√
	16100KITCF60	294K	√				√	√
Safety Quik Single Swivel MAX Kit (KitCFS)[5]	1650KITCFS36	72K	√		√		√	√
	1650KITCFS48	63K	√		√		√	√
	1650KITCFS60	56K	√		√		√	√
	1675KITCFS36	203K	√		√		√	√
	1675KITCFS48	161K	√		√		√	√
	1675KITCFS60	147K	√		√		√	√
	16100KITCFS36	353K	√		√		√	√
	16100KITCFS48	310K	√		√		√	√
	16100KITCFS60	274K	√		√		√	√

[1] Includes Full Port Gas Valve and (2) 90° Street Elbows
[2] Includes Full Port Gas Valve and (1) 90° Street Elbow
[3] Includes Full Port Gas Valve
[4] Includes (2) 90° Street Elbows
[5] Includes (1) 90° Street Elbow

Indicates most commonly stocked item

*BTU/hr Minimum Flow Capacity (0.64 Sp.Gr., 1000 BTU/ft^3 Natural Gas at 0.5" wc pressure drop)

ADDITIONAL CONFIGURATIONS ARE AVAILABLE IN OUR CATALOG.

Add PS to the end of any part number to include the Safety-Set® wheel placement system

We guarantee our commercial gas connectors for the life of the original appliance to which it is connected.

S-D-BUYGUIDE 1508

© Dormont 2015

BARING INDUSTRIES

Submittal Sheet

ITEM# 2.2.13 - RANGE, 60", 6 BURNERS, 24" GRIDDLE W 24" SPACE SAVER OVEN & 36 OVEN (1 EA REQ'D)

Jade (Middleby) JBR-6-24G-2436

Bistro™ Restaurant Range, gas, 60", (6) 30,000 BTU open burners left, (1) 24" griddle right, thermostatic controls, (1) 24" space saver oven, (1) 36" standard oven, (1) chrome plated rack per oven, stainless steel front, sides, tray bed & stub back, 6" adjustable legs, 288,000 BTU, CSAus, NSF

ACCESSORIES

Mfr	Qty	Model	Spec
Jade (Middleby)	1		NOTE: All units are fully welded with heavy duty construction, stainless steel sides, front and top are standard
Jade (Middleby)	1		One year part & labor warranty
Jade (Middleby)	1		Natural gas, specify if elevation over 2000 ft.
Jade (Middleby)	2		(2) 3/4" Rear connections, standard
Jade (Middleby)	2		(2) 3/4" Gas regulator supplied with range
Jade (Middleby)	1	S-60-BIST	Bistro™ 60" Single Deck High Shelf, stainless steel
Jade (Middleby)	2		Additional oven racks for a total of (2) racks per oven
Jade (Middleby)	1		Set of six casters (3 with brakes)

60" SHALLOW DEPTH HEAVY-DUTY

Bistro

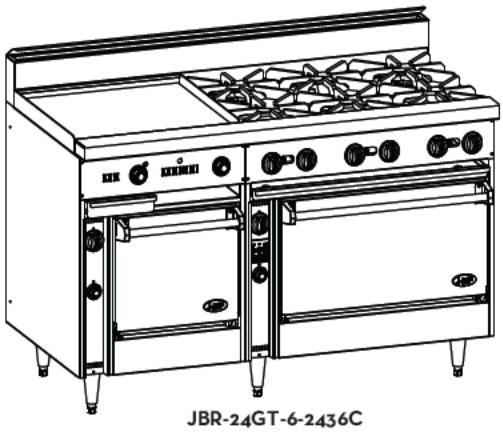

JBR-24GT-6-2436C
shown with stub back

DESCRIPTION:
To be model #JBR _____ manufactured by Jade. Open top sections are to have cast iron 30,000 BTU burners with 12" x 12" steel grate per burner. Griddles are to have polished 1" steel plate with 24,000 BTU burner every 12". Unit to be provided with (2) 3/4" gas regulators.

SPECIFY BASE:

❑ STANDARD OVEN
To have (1) or (2) conventional oven base with stainless steel lining. Oven sides and bottom to be removable without tools. Provide with one oven rack, with wires curled around main frame and chrome plated. Thermostat to adjust from 150°F to 500°F to have 30,000 BTU/hr burner per oven. Oven interior (20" W x 14" H x 24" D)(28" W x 14" H x 24" D).

❑ CONVECTION OVEN
To have (1) or (2) convection oven base with 14 gauge stainless steel interior. Provide with one oven rack, with wires curled around main frame and chrome plated. Thermostat to adjust from 150°F to 500°F to have 30,000 BTU/hr burner. Provide with 1/3 HP 115/60/1 blower motor. Oven interior (19-3/4" W x 13-1/2" H x 20-1/2" D)(27-3/4" W x 13-1/2" H x 20-1/2" D).

❑ CABINET BASE
To have open cabinet base constructed of 14 gauge all welded steel.

SPECIFY TYPE OF GAS WHEN ORDERING.

SPECIFY ALTITUDE WHEN ABOVE 2,000 FT.

MODEL NO.	DESCRIPTION
❑ JBR-10-2436	10 OPEN BURNERS W/ 2 OVENS
❑ JBR-10-36	10 OPEN BURNERS W/ OVEN AND CABINET BASE
❑ JBR-10	10 OPEN BURNERS W/ CABINET BASE
❑ JBR-24G-6-2436	24" GRIDDLE, 6 OPEN BURNERS W/ 2 OVENS
❑ JBR-24G-6-36	24" GRIDDLE, 6 OPEN BURNERS, OVEN CABINET BASE
❑ JBR-24G-6	24" GRIDDLE, 6 OPEN BURNERS W/CABINET BASE
❑ JBR-36G-4-2436	36" GRIDDLE, 4 OPEN BURNERS W/ 2 OVENS
❑ JBR-36G-4-36	36" GRIDDLE, 4 OPEN BURNERS, OVEN, CABINET BASE
❑ JBR-36G	36" GRIDDLE, 4 OPEN BURNERS W/CABINET BASE
❑ JBR-48G-2-2436	48" GRIDDLE, 2 OPEN BURNERS W/ 2 OVENS
❑ JBR-48G-2-36	48" GRIDDLE, 2 OPEN BURNERS,OVEN, CABINET BASE
❑ JBR-48G-2	48" GIRDDLE, 2 OPEN BURNERS W/CABINET BASE
❑ JBR-6-24G-2436	6 OPEN BURNERS, 24" GRIDDLE W/ 2 OVENS
❑ JBR-6-24G-36	6 OPEN BURNERS, 24" GRIDDLE, OVEN,CABINET BASE
❑ JBR-6-24G	6 OPEN BURNERS, 24" GRIDDLE W/ CABINET BASE
❑ JBR-4-36G-2436	6 OPEN BURNERS, 36" GRIDDLE W/ 2 OVENS
❑ JBR-4-36G-36	6 OPEN BURNERS, 36" GRIDDLE, OVEN, CABINET BASE
❑ JBR-4-36G	6 OPEN BURNERS, 36" GRIDDLE W/CABINET BASE
❑ JBR-2-48G-2436	2 OPEN BURNERS, 48" GRIDDLE W/ 2 OVENS
❑ JBR-2-48G-36	2 OPEN BURNERS, 48" GRIDDLE, OVEN, CABINET BASE
❑ JBR-2-48G	2 OPEN BURNERS, 48" GRIDDLE W/ CABINET BASE
❑ JBR-60G-2436	60" GRIDDLE W/ 2 OVENS
❑ JBR-60G-36	60" GRIDDLE, OVEN, CABINET BASE
❑ JBR-60G	60" GRIDDLE W/CABINET BASE

Note: For all models available with a single convection oven base (add a "C" to the end of the model number, which will default to the larger oven on the right - this applies to "-36" & "-2436" models only). All models with a double convection oven base (add a "CC" to the end of the model number - this applies to "2436" models only)

Note: For hot top section in lieu of 2 open burners, add 1HT and delete 2 open burners from model number.

STANDARD FEATURES
- Stainless steel front, sides, tray bed and stub back
- 14 gauge stainless steel all welded construction
- Stainless steel removable oven interior
- One chrome plated oven rack per oven (wires curled and welded around main frame with no sharp ends)
- Oven control located in cool zone
- Stainless steel gas tubing throughout
- Stainless steel pilot tips
- (2) 3/4" gas regulators
- Stainless steel stub back

WWW.JADERANGE.COM

JADE RANGE, LLC., A MIDDLEBY COMPANY • 2650 Orbiter Street • Brea, CA 92821 • PHONE: 800-884-5233 FAX: 714-961-2550

Note: In line with their policy to continually improve products, Jade reserves the right to change materials and specifications without notice. PRINTED IN USA

60" SHALLOW DEPTH HEAVY-DUTY

60" SHALLOW DEPTH HEAVY-DUTY

MODEL	BTUS	WIDTH	DEPTH	HEIGHT	APPX. SHP. WT.
JBR-10-2436*	360,000	60"	SEE DRAWING	SEE DRAWING	820 LBS.
JBR-10-36*	330,000	60"	SEE DRAWING	SEE DRAWING	735 LBS.
JBR-10	300,000	60"	SEE DRAWING	SEE DRAWING	655 LBS.
JBR-24G-6-2436*	288,000	60"	SEE DRAWING	SEE DRAWING	865 LBS.
JBR-24G-6-36*	258,000	60"	SEE DRAWING	SEE DRAWING	780 LBS.
JBR-24G-6	228,000	60"	SEE DRAWING	SEE DRAWING	700 LBS.
JBR-36G-4-2436	252,000	60"	SEE DRAWING	SEE DRAWING	895 LBS.
JBR-36G-4-36	222,000	60"	SEE DRAWING	SEE DRAWING	810 LBS.
JBR-36G-4	192,000	60"	SEE DRAWING	SEE DRAWING	730 LBS.
JBR-48G-2-2436	216,000	60"	SEE DRAWING	SEE DRAWING	905 LBS.
JBR-48G-2-36	186,000	60"	SEE DRAWING	SEE DRAWING	820 LBS.
JBR-48G-2	156,000	60"	SEE DRAWING	SEE DRAWING	740 LBS.
JBR-6-24G-2436*	284,000	60"	SEE DRAWING	SEE DRAWING	865 LBS.
JBR-6-24G-36	254,000	60"	SEE DRAWING	SEE DRAWING	780 LBS.
JBR-6-24G	224,000	60"	SEE DRAWING	SEE DRAWING	700 LBS.
JBR-4-36G-2436	252,000	60"	SEE DRAWING	SEE DRAWING	895 LBS.
JBR-4-36G-36	222,000	60"	SEE DRAWING	SEE DRAWING	810 LBS.
JBR-4-36G	192,000	60"	SEE DRAWING	SEE DRAWING	730 LBS.
JBR-2-48G-2436	216,000	60"	SEE DRAWING	SEE DRAWING	905 LBS.
JBR-2-48G-36	186,000	60"	SEE DRAWING	SEE DRAWING	820 LBS.
JBR-2-48G	156,000	60"	SEE DRAWING	SEE DRAWING	740 LBS.
JBR-60G-2436	180,000	60"	SEE DRAWING	SEE DRAWING	925 LBS.
JBR-60G-36	150,000	60"	SEE DRAWING	SEE DRAWING	840 LBS.
JBR-60G	120,000	60"	SEE DRAWING	SEE DRAWING	760 LBS.

AVAILABLE OPTIONS

- ❑ Stainless steel high shelf
- ❑ Stainless steel high riser
- ❑ Thermostatic griddle control (add T to Model #)
- ❑ Grooved griddle surface (add G to Model #)
- ❑ Casters

GRIDDLE

- 1" thick highly polished steel plate
- One 24,000 BTU burner ever 12"

OPEN BURNERS

- 30,000 BTU easy-clean cast iron open burner
- 12" x 12" lift-off steel grates

ACESSORIES

- ❑ 6" Casters, front two locking (5" diameter wheel)
- ❑ 36" flex hose with quick disconnect & restraining device
- ❑ 48" flex hose with quick disconnect & restraining device
- ❑ Additional oven rack (one supplied per oven)

ELECTRIC CONVECTION OVEN ONLY:

- Power Supply: 115/60/1 - 6 foot cord with 3 prong plug
- Total maximum amps 4.0/oven
- Electronic Spark Ignitor: activated by power switch, ignites standing pilot
- Fan Switch: three positions, on for normal operation, on for quick cool down, off.

NOTE: SPECIFY TYPE OF GAS WHEN ORDERING.

UTILITY INFORMATION:

- (2) 3/4" Connections - see drawing for location
- Required operating pressure:

Natural Gas 5" W.C. minimum
Propane Gas 10" W.C. minimum
14" W.C. maximum

Note: This unit must be connected with the gas appliance regulator supplied.

WWW.JADERANGE.COM

JADE RANGE, LLC., A MIDDLEBY COMPANY • 2650 Orbiter Street • Brea, CA 92821 • PHONE: 800-884-5233 FAX: 714-961-2550

Note: In line with their policy to continually improve products, Jade reserves the right to change materials and specifications without notice. PRINTED IN USA

60" SHALLOW DEPTH HEAVY-DUTY

60" SHALLOW DEPTH HEAVY-DUTY

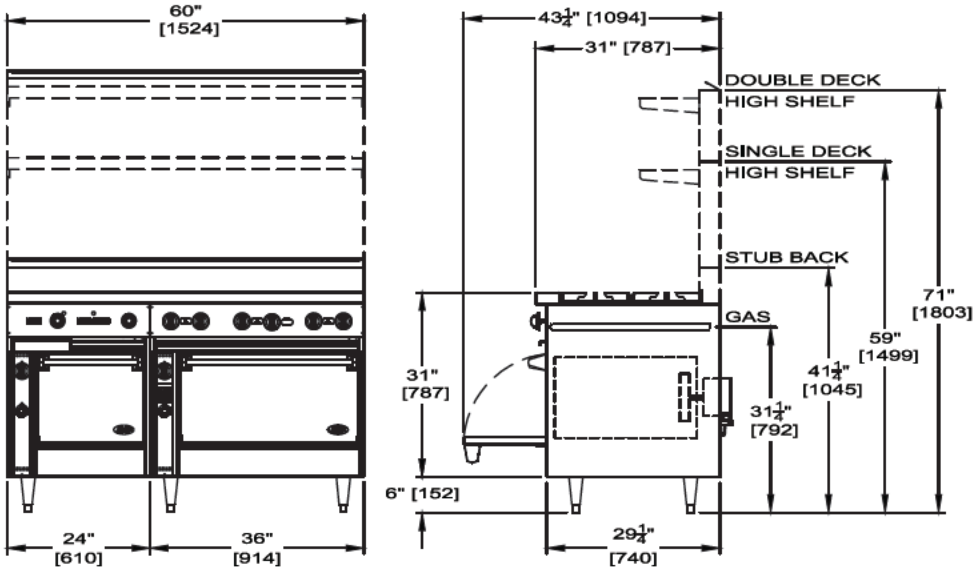

[ ] = MILLIMETERS

BISTRO HIGH RISERS AND HIGH SHELVES

All Back Shelves are reinforced

STAINLESS STEEL SHORT BACK RISER, 12" HIGH

MODEL	WIDTH	WT. (LBS.)	LIST PRICE
SR-12-BIST	12" Wide	15	$496
SR-24-BIST	24" Wide	40	$881
SR-36-BIST	36" Wide	55	$988
SR-48-BIST	48" Wide	80	$1,210
SR-60-BIST	60" Wide	95	$1,329
SR-72-BIST	72" Wide	105	$1,467

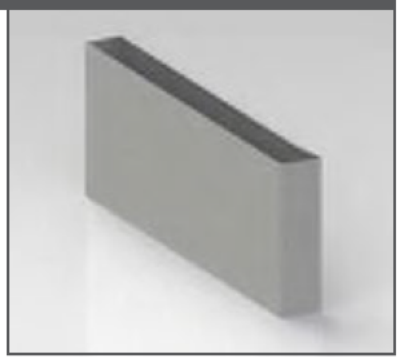

STAINLESS STEEL HIGH BACK RISER 24.5" HIGH

MODEL	WIDTH	WT. (LBS.)	LIST PRICE
R-12-BIST	12" Wide	20	$615
R-24-BIST	24" Wide	45	$948
R-36-BIST	36" Wide	60	$1,163
R-48-BIST	48" Wide	85	$1,350
R-60-BIST	60" Wide	110	$1,615
R-72-BIST	72" Wide	125	$1,815

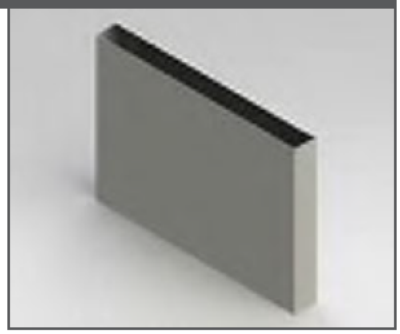

SINGLE DECK STAINLESS STEEL HIGH SHELF

MODEL	WIDTH	WT. (LBS.)	LIST PRICE
S-12-BIST	12" Wide	25	$861
S-24-BIST	24" Wide	50	$1,190
S-36-BIST	36" Wide	70	$1,573
S-48-BIST	48" Wide	90	$1,768
S-60-BIST	60" Wide	115	$2,126
S-72-BIST	72" Wide	145	$2,353

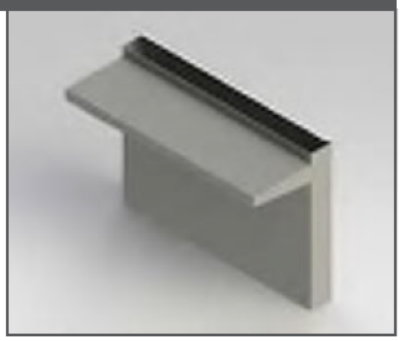

SINGLE DECK STAINLESS STEEL TUBULAR HIGH SHELF

MODEL	WIDTH	WT. (LBS.)	LIST PRICE
TS-12-BIST	12" Wide	25	$878
TS-24-BIST	24" Wide	50	$1,522
TS-36-BIST	36" Wide	70	$2,171
TS-48-BIST	48" Wide	90	$2,495
TS-60-BIST	60" Wide	115	$3,441
TS-72-BIST	72" Wide	145	$4,059

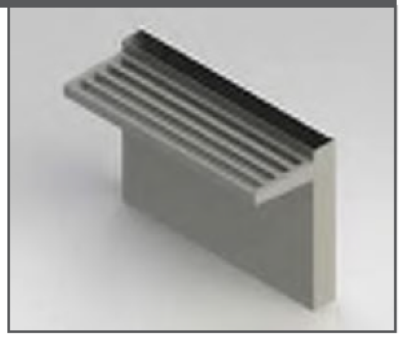

DOUBLE HIGH STAINLESS STEEL BACK RISER, 36" HIGH

MODEL	WIDTH	WT. (LBS.)	LIST PRICE
DR-12-BIST	12" Wide	30	$941
DR-24-BIST	24" Wide	50	$1,411
DR-36-BIST	36" Wide	70	$1,865
DR-48-BIST	48" Wide	90	$2,109
DR-60-BIST	60" Wide	120	$2,601
DR-72-BIST	72" Wide	145	$2,851

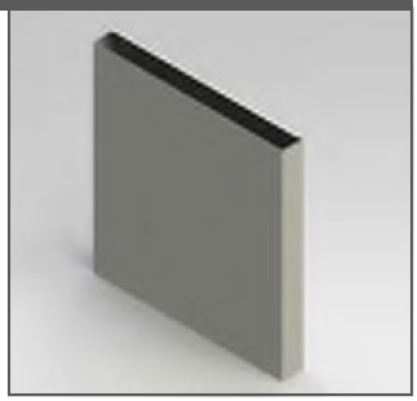

DOUBLE DECK STAINLESS STEEL HIGH SHELF

MODEL	WIDTH	WT. (LBS.)	LIST PRICE
DS-12	12" Wide	35	$1,198
DS-24	24" Wide	60	$1,797
DS-36	36" Wide	90	$2,376
DS-48	48" Wide	110	$2,705
DS-60	60" Wide	130	$3,334
DS-72	72" Wide	150	$3,497

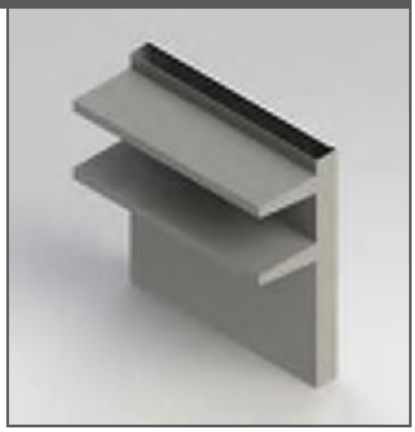

DOUBLE DECK STAINLESS STEEL TUBULAR HIGH SHELF

MODEL	WIDTH	WT. (LBS.)	LIST PRICE
DTS-12-BIST	12" Wide	35	$1,236
DTS-24-BIST	24" Wide	60	$1,818
DTS-36-BIST	36" Wide	90	$2,468
DTS-48-BIST	48" Wide	110	$2,893
DTS-60-BIST	60" Wide	130	$3,449
DTS-72-BIST	72" Wide	150	$3,658

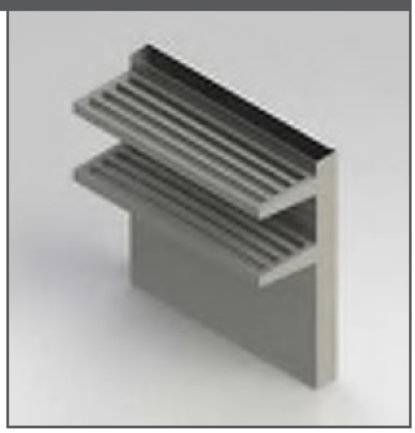

ALL BACKGUARDS AND SHELVES ARE SHIPPED ASSEMBLED ON EQUIPMENT
(must specif if ack-guards and shelves to e shipped loose)

Options: For additional options refer to the "Accessories and Options" information on pages 5-9.

BARING INDUSTRIES

Submittal Sheet

ITEM# 2.2.13.1 - BLUE HOSE GAS CONNECTOR KIT (2 KT REQ'D)

Dormont 1675KIT2S48PS

Dormont Blue Hose™ Moveable Gas Connector Kit, 3/4" inside dia., 48" long, covered with stainless steel braid, coated with blue antimicrobial PVC, (1) SnapFast® QD, (2) Swivel MAX®, (1) full port valve, (1) pair Safety Set® with hardware mounting options, limited lifetime warranty

Item #2.2.13.1
1675KIT2S48PS
Dormont
CAM #24-0670
Exhibit 1
Page 99 of 288
Baring Industries, Inc.
Fort Lauderdale Police HQ - Cafeteria Serving

Dormont®

Foodservice Moveable Equipment Installation Products

The Dormont Blue Hose™ is the heart of the Safety System, specifically engineered for caster-mounted commercial cooking equipment. The Blue Hose includes an antimicrobial protective PVC coating, and our Stress Guard® technology that makes the hose easier to install and dramatically reduces stress on the hose ends.

The fuel gas codes require the use of an ANSI Z21.69/CSA 6.16 moveable gas connector with all appliances that may or may not utilize casters and, under normal use, are moved on a regular basis for service, positioning or area cleanliness.



STRESS GUARD TECHNOLOGY

Rotation technology reduces stress on both ends of the hose

Stainless Steel Construction
Heavy-duty, flexible, corrugated 304 stainless steel tubing

Stainless Steel Braid
Tight-weave braid prevents corrugations from stretching as equipment is moved

Antimicrobial PVC Coating
Inhibits growth of bacteria, mold and mildew on the gas connector





A Watts Water Technologies Company USA: 6015 Enterprise Drive, Export, PA 15632 • 1-800-DORMONT • Dormont.com

The Dormont Safety System™ is the first and only complete gas equipment connection system specifically engineered for the commercial kitchen. It is a complete system of connection products designed with the safety of your kitchen, the food you serve, your employees, and your business in mind.

The Safety System includes the famous Dormont Blue Hose and our exclusive safety-based fittings - the SnapFast quick-disconnect, the Safety Quik quick-disconnect valve, and the Swivel MAX. Safe, unique, and affordable, the Dormont Safety System provides peace of mind for the gas connections in your commercial kitchen.

Safety Quik
- Prevents user from turning on gas while appliance is disconnected
- Thermal shut-off when internal temperature exceeds 350°F (177°C)

SnapFast
- One-handed quick-disconnect fitting
- Thermal shut-off when internal temperature exceeds 350°F (177°C)

SwivelMAX
- Reduces stress on connector
- Increases kitchen aisle space by allowing connector to be positioned closer to the wall

Restraining Cable
- Prevents transmission of strain to connector
- Provided 1' shorter than the gas connector

Safety-Set
- Ensures cooking equipment is always positioned in design-specified location
- Fast installation with choice of adhesive foam tape or thumbscrews

11/6/14 11:07 AM

Dormont Moveable Commercial Equipment Kits

KIT SOLUTIONS	50 = ½" ID 75 = ¾" ID 100 = 1" ID 125 = 1-¼" ID PART NUMBER	BTU/hr Minimum Flow Capacity*	THE BLUE HOSE™	SnapFast® QUICK-DISCONNECT	Swivel MAX® 1st SWIVEL	Swivel MAX® 2nd SWIVEL	Safety Quik® VALVE	RESTRAINING CABLE
Standard Kit (KIT)[1] The Dormont Blue Hose™ SnapFast Quick-Disconnect Restraining Cable	1650KIT36	77K	√	√				√
	1650KIT48	68K	√	√				√
	1650KIT60	60K	√	√				√
	1675KIT36	218K	√	√				√
	1675KIT48	180K	√	√				√
	1675KIT60	158K	√	√				√
	16100KIT36	379K	√	√				√
	16100KIT48	334K	√	√				√
	16100KIT60	294K	√	√				√
Single Swivel MAX Kit (KITS)[2] The Dormont Blue Hose™ SnapFast Quick-Disconnect One Swivel MAX Swivel Restraining Cable	1650KITS36	72K	√	√	√			√
	1650KITS48	63K	√	√	√			√
	1650KITS60	56K	√	√	√			√
	1675KITS36	203K	√	√	√			√
	1675KITS48	167K	√	√	√			√
	1675KITS60	147K	√	√	√			√
	16100KITS36	353K	√	√	√			√
	16100KITS48	310K	√	√	√			√
	16100KITS60	274K	√	√	√			√
Double Swivel MAX Kit (KIT2S)[3] The Dormont Blue Hose™ SnapFast Quick-Disconnect Two Swivel MAX Swivels Restraining Cable	1650KIT2S36	69K	√	√	√	√		√
	1650KIT2S48	60K	√	√	√	√		√
	1650KIT2S60	54K	√	√	√	√		√
	1675KIT2S36	193K	√	√	√	√		√
	1675KIT2S48	160K	√	√	√	√		√
	1675KIT2S60	140K	√	√	√	√		√
	16100KIT2S36	336K	√	√	√	√		√
	16100KIT2S48	295K	√	√	√	√		√
	16100KIT2S60	261K	√	√	√	√		√
Safety Quik Kit (KITCF)[4] The Dormont Blue Hose™ Safety Quik Quick-Disconnect Restraining Cable	1650KITCF36	77K	√				√	√
	1650KITCF48	68K	√				√	√
	1650KITCF60	60K	√				√	√
	1675KITCF36	218K	√				√	√
	1675KITCF48	180K	√				√	√
	1675KITCF60	158K	√				√	√
	16100KITCF36	379K	√				√	√
	16100KITCF48	334K	√				√	√
	16100KITCF60	294K	√				√	√
Safety Quik Single Swivel MAX Kit (KitCFS)[5]	1650KITCFS36	72K	√		√		√	√
	1650KITCFS48	63K	√		√		√	√
	1650KITCFS60	56K	√		√		√	√
	1675KITCFS36	203K	√		√		√	√
	1675KITCFS48	161K	√		√		√	√
	1675KITCFS60	147K	√		√		√	√
	16100KITCFS36	353K	√		√		√	√
	16100KITCFS48	310K	√		√		√	√
	16100KITCFS60	274K	√		√		√	√

[1] Includes Full Port Gas Valve and (2) 90° Street Elbows
[2] Includes Full Port Gas Valve and (1) 90° Street Elbow
[3] Includes Full Port Gas Valve
[4] Includes (2) 90° Street Elbows
[5] Includes (1) 90° Street Elbow

Indicates most commonly stocked item

*BTU/hr Minimum Flow Capacity (0.64 Sp.Gr., 1000 BTU/ft^3 Natural Gas at 0.5" wc pressure drop)

ADDITIONAL CONFIGURATIONS ARE AVAILABLE IN OUR CATALOG.

Add PS to the end of any part number to include the Safety-Set® wheel placement system

We guarantee our commercial gas connectors for the life of the original appliance to which it is connected.

S-D-BUYGUIDE 1508

© Dormont 2015

BARING INDUSTRIES

Submittal Sheet

ITEM# 2.2.16 - EXHAUST HOOD (1 EA REQ'D)

Captive-Aire

Exhaust hood:

5424AH-ND-2-PSP-F - 11ft 0" Long Exhaust-Only Wall Canopy Hood with 14" Wide Front Perforated Supply Plenum with Built-in 3" Back Standoff
- 430 SS Where Exposed
- Insulation for the PSP Housing - Front
- Fire Cabinet on the Left Side 12.00" Width x 54.00" Length x 24.00" Height (Additional charges may apply for cabinet if not sold with fire system)
- FILTER - 20" tall x 16" wide Kleen-Gard Stainless Steel Baffle Filter with Handles and Bottom Hanging Hook, UL Classified
- L55 Series E26 Canopy Light Fixture - High Temp Assembly, Includes Clear Thermal and Shock Resistant Globe (L55 Fixture), Bulbs By Others
- Extra Fixtures- L55 Series E26 Canopy Light Fixture - High Temp Assembly, Includes Clear Thermal and Shock Resistant Globe (L55 Fixture)
- EXHAUST RISER - Factory installed 12" X 12" X 4"
- SUPPLY RISER - 12"x 20" Supply Riser with Volume Dampers
- 1/2 Pint Grease Cup New Style, Flanged Slotted
- FIELD WRAPPER 18.00" High Front, Left, Right
- Electrical Package Installation in Utility Cabinet by Plant.
- BACKSPLASH 122.00" High X 180.00" Long 430 SS Vertical (Includes End Caps & Divider Bars)
- Parts required to mount riser sensor 6 inches beside riser. Sensor installed directly in line with the center of riser and in center of the plenum space front to back.
- RIGHT WIDE VERTICAL END PANEL 42" Top Width, 36" Bottom Width, 80" High Insulated 430 SS
- LEFT WIDE VERTICAL END PANEL 42" Top Width, 36" Bottom Width, 80" High Insulated 430 SS

SC-311110MA 3 Phase w/ control for 1 Exhaust Fan, 1 Supply Fan, Exhaust on in Fire, Lights out in Fire, Relay On/Off with Supply Fan, Fan(s) On/Off Thermostatically Controlled. Room temperature sensor shipped loose for field installation. INVERTER DUTY 3 PHASE MOTOR REQUIRED FOR USE WITH VFD. Includes 1 Duct Thermostat kit.
- ESV112N02YXB571 - Variable Frequency Drive - 1-1/2 HP Max., 200/240 V, Single or Three Phase Input, 6.0 A Max., NEMA 1 Enclosure, with 2RJ-45 FOR MODBUS
- ESV152N02YXB571 - Variable Frequency Drive - 2 HP Max., 200/240 V, Single or Three Phase Input, 7.0 A Max., NEMA 1 Enclosure, with 2RJ-45 FOR MODBUS
- PSP thermostat kit, includes 1x duct thermostat, quick seal, and j-box for monitoring of PSP discharge temperature.
- VERIZON CELLULAR KIT, WIRED ANTENNA AND VERIZON DATA FOR 1 YEARS.
- Digital Prewire Lighting Relay Kit. Includes hood lighting relay & terminal blocks. Allows for up to 1400W of lighting each.
- Thermistor CABLE - 18/2 AWG GREEN WHITE, plenum rated. USED for thermistor duct stat. Per Foot Price.

BARING INDUSTRIES

Submittal Sheet

ITEM# 2.2.16.1 - EXHAUST & SUPPLY FANS (1 EA REQ'D)

Captive-Aire

Exhaust & supply fans

Exhaust fan:
AH-DU180HFA High Speed Direct Drive Centrifugal Upblast Exhaust Fan with, disconnect switch and 18-3/4" wheel.
Exhaust Fan handles 2200 CFM @ -1.200" wc ESP, Fan runs at 1092 RPM.
Exhaust Motor: 2.000 HP, 3 Phs, 208 V, 60 Hz, 6.1 FLA, ODP, Premium (E-Plus3) Eff.
- Grease Cup for kitchen-duty centrifugal exhaust fans,
Box Dimensions 17-1/8 L X 5-1/16 W X 3-3/4 H (20 Gauge) (Includes Down Spout)
- Miami Dade Impact and Wind Load Certification +150 / -150 PSF - Miami Dade County Product Control Approved. Florida Building Code approval. Roof & Wall Mount Exhaust Curbs up to 20" high must be 20 gauge Aluminized. Roof & Wall Mount Exhaust Curbs above 20" high up to 42" high must be 18 Gauge Aluminized.
- KEF-1 Curb CRB26.5x20E On Fan #1 Flat Curb
- Hinged Base for Curb. Standard Hinge attached to curb. Used on Fans with wheels 20 inches or smaller. 12 GA Galvanized.
- Vented Base for Curb

Supply fan:
AH-A1-15D-MPU Supply Unit with 15" Mixed Flow Direct Drive Fan in Size #1 Housing Supply Fan handles 1760 CFM @ 0.500" wc ESP, Fan runs at 1739 RPM. Supply Motor: 1.500 HP, 3 Phs, 208 V, 60 Hz, 4.4 FLA, ODP, Premium (E-Plus3) Eff.
Down Discharge - Air Flow Right -> Left
- Sloped Filtered Intake for Size #1 Modular Untempered Supply Unit.
21.813" Wide x 44.375" Long x 23.375" High.
Includes 2" MV EZ Kleen Metal Mesh Filters.
- Down Discharge Construction for Size 1 Untempered Direct Drive AHUs
- Miami Dade Impact and Wind Load Certification +30 / -130 PSF - Miami Dade County Product Control Approved. Florida Building Code approval. Roof Mount Exhaust Curbs up to 20" high must be 18 gauge Aluminized.
- Support shell for Size 1 Modular Package Unit. Includes control vestibule. Includes condenser supports. Does not include return air or inlet air damper.
- 3 Ton, Single Circuit Modular Packaged Cooling Option for Size 1 Modular Packaged Unit. Includes Condenser, DX Coil, Filter/Dryer Kit, Thermal Expansion Valve, R410A Refrigerant, and Refrigerant Piping. (1,100 to 1,800 cfm) When ordered with opposite airflow condensers access and coil piping will remain in standard position. Drain and sleds will move to the opposite side. Any other change will require CLI. CONDENSERS REQUIRE SEPARATE 208V, 3 PHASE POWER SUPPLY UNLESS ORDERED WITH SINGLE POINT CONNECTION. Coil = 2EZ1001N
- Insulated Blower Housing Sizes 1-2 Commercial Modular
- Control Package for Mod Package Unit Cooling Only Unit. Includes airflow proving switch, RTUlink-ACHP board and terminal blocks.
- Separate 120VAC Wiring Package for Make-Up Air Units. Option must be selected when mounting VFD in prewire panel or with DCV package. Provides separate 120VAC input to supply fan. This 120V signal must be run by electrician from DCV to mua switch.
- KSF-1 Curb CRB21X113X20INS Insulated On Fan #2 Flat Curb
- Full Bottom Curb Corner. Base flange corners fully welded or staked by factory.
- Steel Clip for Miami Dade MPU Curb Mounts

BARING INDUSTRIES

Submittal Sheet

ITEM# 2.2.16.2 - FIRE SUPPRESSION SYSTEM (1 EA REQ'D)

Ansul INCLUDED IN INSTALLATION

Fire suppression system:

TANK-SP-2 Tank Fire Suppression 8 gallon Fire System in Utility Cabinet (includes pre-piped hood(s) with electric detection, tank(s), 24 VDC release mechanism, fire system agent, pressurized tanks, and electric pull station). (Formerly CAS-EWC).
Includes piping for hood: 1.
- Tank-based Fire Protection System equipped with Electronic Detection utilizing CORE board as a Listed Release Mechanism. Installed in Hood Utility Cabinet with integral hood prewire panel.
- Pressure Switch - Monitors Tank Pressure, Supervised Signal, TANK FIRE SUPPRESSION
- SC-EGVA2 GAS VALVE - 2" Electrical Shutoff Valve for use with HMI reset, 110V, 60Hz (#8214280). Includes upstream strainer assembly.

<Included>

BARING INDUSTRIES

Submittal Sheet

ITEM# CS-1 - SERVING COUNTER (1 EA REQ'D)

CFE CUSTOM

Solid surface counter top on wall mounted brackets:
1/2" x 4" Back Splash
~STANDARD GRADE CORIAN
Options Included:
(1) Standard Grade Corian (10 SqFt)
(1) 3/4" Exterior Grade Plywood Sub Top (5 LnFt)
(3) Rakks Brackets, EH-1818
(1) Set & Seam

BARING INDUSTRIES

Submittal Sheet

ITEM# CS-3 - SERVING COUNTER (1 EA REQ'D)

CFE CUSTOM

Counter, 'L'-Shaped, 82" x 25", 145" x 25", 34" High, 1/2"
x 4" Back Splash
~STANDARD GRADE CORIAN, STANDARD GRADE
LAMINATE
Specifications: (unless otherwise noted in options below)
#16 Ga. Sub-Top, Coved Corner Construction, with #18 Ga. S/S
Semi-Enclosed Body, #18 Ga. S/S Bottom & Intermediate Shelves
(where applicable), Galv. Channel & Angle Reinforcement, 1-5/8"
O.D. S/S Legs with S/S Adjustable Bullet Feet.
Options Included:
(1) Standard Grade Corian (34 SqFt)
(4) Custom Drawers
(4) Soft Close Drawer Slides
(8) Laminated Hinged Doors (Millwork)
(12) Outwater Plastics Pull 20096-SS
(4) Undershelf Adjustable, in Cabinet
(1) Cabinet Galv. Base/Curb (18.9 LnFt)
(1) Field Joint, Mechanical (bolted)
(1) Set & Seam

BARING INDUSTRIES

Submittal Sheet

ITEM# CS-4 - ISLAND COUNTER (1 EA REQ'D)

CFE CUSTOM

Island Counter, 190" x 50" x 34" High
~STANDARD GRADE CORIAN, STANDARD GRADE LAMINATE
Specifications: (unless otherwise noted in options below)
#14 Ga. S/S Top, Coved Corner Construction, with #18 Ga. S/S Semi-Enclosed Body, #18 Ga. S/S Bottom & Intermediate Shelves (where applicable), Galv. Channel & Angle Reinforcement, 1-5/8" O.D. S/S Legs with S/S Adjustable Bullet Feet.
Options Included:
(1) Standard Grade Corian (66 SqFt)
(2) Double Bowl Drop-in Sink
(2) Drain, Basket Waste
(1) FAUCET BY OTHERS
(10) Custom Drawers
(10) Soft Close Drawer Slides
(22) Laminated Hinged Doors (Millwork)
(32) Outwater Plastics Pull 20096-SS
(10) Undershelf Adjustable, in Cabinet
(1) Cabinet Galv. Base/Curb (16 LnFt)
(1) Set & Seam
(6) Electrical, 120V/20A Receptacle, Cover, J-Box

BARING INDUSTRIES

Submittal Sheet

ITEM# CS-4.1 - DECK MOUNT FAUCET (1 EA REQ'D)

T&S Brass B-1141

Faucet, gooseneck nozzle, deck mount, quarter-turn Eterna cartridges, lever handles, low lead, ADA Compliant

T&S BRASS AND BRONZE WORKS, INC.
2 Saddleback Cove / P.O. Box 1088
Travelers Rest, SC 29690

Travelers Rest, SC: 800-476-4103 • Simi Valley, CA: 800-423-0150 • Fax: 864-834-3518 • www.tsbrass.com

Model No. **B-1141**

Item No.

ADA Compliant

This Space for Architect/Engineer Approval

Job Name_____ Date_____

Model Specified_____ Quantity_____

Customer/Wholesaler_____

Contractor_____

Architect/Engineer_____

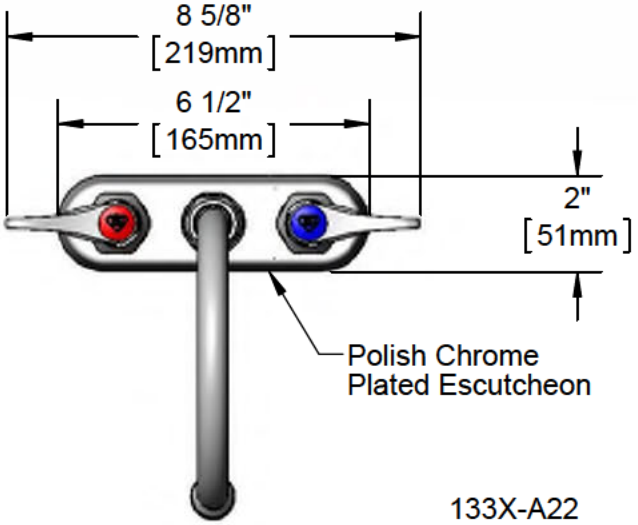



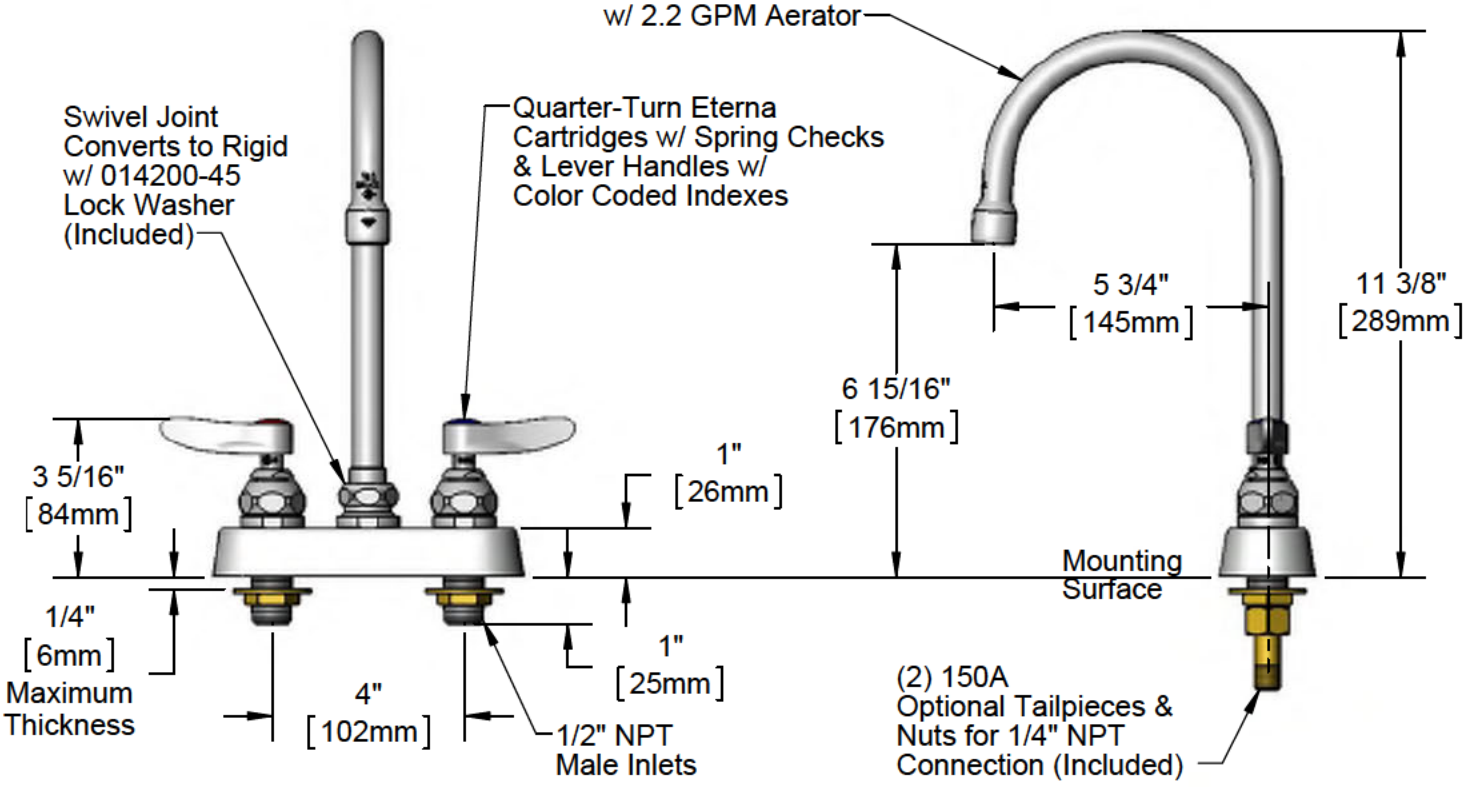

Rough-In Requirement:
(2) ∅ 1" [25mm] Mounting Holes

Product Specifications:
4" Deck Mount Workboard Faucet, Quarter-Turn Eterna Cartridges w/ Spring Checks, Lever Handles, 6" Swivel Gooseneck, 2.2 GPM Aerator & 1/2" NPT Male Inlets

Product Compliance:
ASME A112.18.1 / CSA B125.1
NSF 61 - Section 9
NSF 372 (Low Lead Content)
ANSI A117.1 (ADA)

Drawn:	DMH	Checked:	JRM	Approved:	JHB	Date:	06/01/16	Scale:	1:4	Sheet:	1 of 2

CAM #24-0670
Exhibit 1

T&S BRASS AND BRONZE WORKS, INC.
2 Saddleback Cove / P.O. Box 1088
Travelers Rest, SC 29690

Travelers Rest, SC: 800-476-4103 • Simi Valley, CA: 800-423-0150 • Fax: 864-834-3518 • www.tsbrass.com

Model No. **B-1141**

Item No.

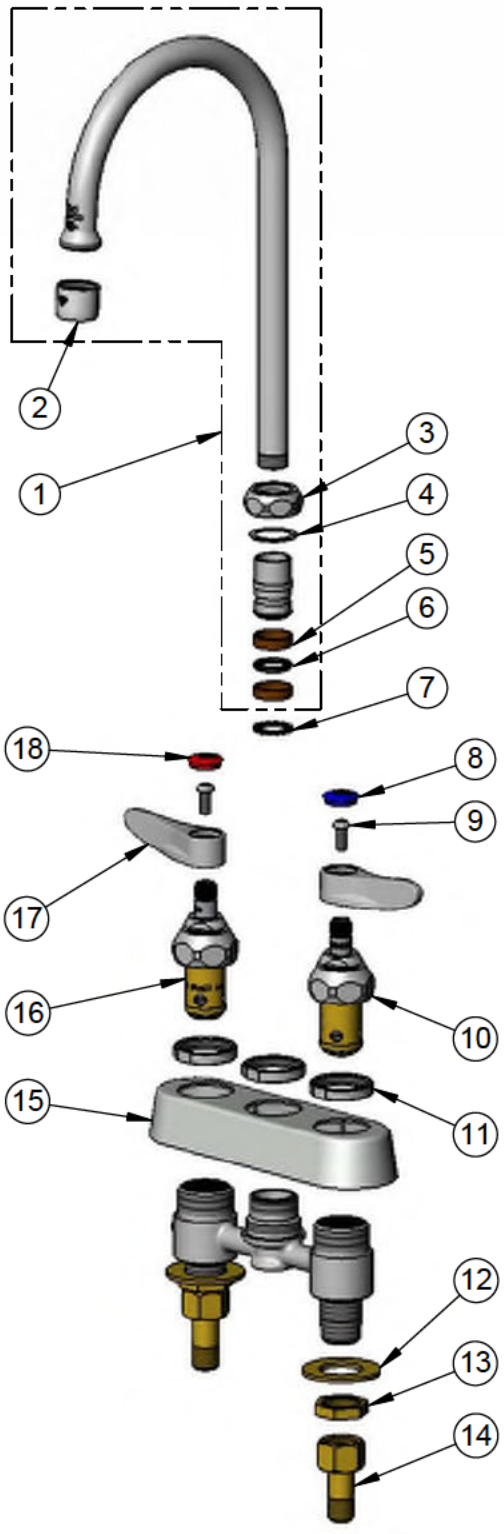

ITEM NO.	SALES NO.	DESCRIPTION
1	133X-A22	6" Swivel Gooseneck w/ 2.2 GPM Aerator
2	B-0199-01	2.2 GPM Aerator, 55/64"-27 UN Female
3	019360-40	Swivel Nut (New Style)
4	009538-45	Swivel Washer
5	011429-45	Swivel Sleeves (2)
6	001074-45	O-Ring
7	014200-45	Star Washer, Anti-Rotation
8	019363-45	Blue Button Index, Press-in
9	000925-45	Lab Handle Screw
10	019382-40	Quarter-Turn New Style Eterna Cartridge w/ Spring Check, LTC
11	019376-40	Escutcheon Lock Nut
12	000999-45	Brass Lock Washer
13	002954-45	Shank Lock Nut
14	150A	1/4" NPT Tailpiece & Nut
15	019374-40	B-1110 Eterna Workboard Escutcheon
16	019383-40	Quarter-Turn New Style Eterna Cartridge w/ Spring Check, RTC
17	019362-45	Lever Handle (New Style)
18	019364-45	Red Button Index, Press-in

Product Specifications:
4" Deck Mount Workboard Faucet, Quarter-Turn Eterna Cartridges w/ Spring Checks, Lever Handles, 6" Swivel Gooseneck, 2.2 GPM Aerator & 1/2" NPT Male Inlets

Product Compliance:
ASME A112.18.1 / CSA B125.1
NSF 61 - Section 9
NSF 372 (Low Lead Content)
ANSI A117.1 (ADA)

Drawn:	DMH	Checked:	JRM	Approved:	JHB	Date:	06/01/16	Scale:	NTS	Sheet:	2 of 2

CAM #24.0670
Exhibit F

BARING INDUSTRIES

Submittal Sheet

ITEM# 2.2.18 - DISHWASHER, UNDERCOUNTER (1 EA REQ'D)

Hobart CUL-1

Centerline Dishwasher, undercounter, 22-11/16"W x 24"D x 32-5/16"H, (24) racks/hr, low temperature chemical sanitizing, fresh water rinse, .84 gal/rack, delime notification and cycle, service diagnostics with error notifications, soft start, detergent, rinse aid, & sanitizer pumps, (1) chemical sensing indicator for sanitizer, 120v/60/1-ph, 17.5 amps, ships with (1) peg rack and 1 combo rack, cULus, NSF (Pricing options available, please contact your local rep for more information) (NET price shown)

ACCESSORIES

Mfr	Qty	Model	Spec
Hobart	1		Standard warranty - 1-Year parts, labor & travel time during normal working hours within the USA
Hobart	1	CORD-PWRKIT-CHLX	Power Cord Kit -LXEC, 1-ph, NEMA 5-20P, plug included
Hobart	1		NOTE: Hobart suggests adding a water softener. Hobart recommends a total of 2 water softeners (one for the incoming hot water line, one for the incoming cold water line) for all Centerline dishwashers.
Hobart	1	DWT-CUH	Drain water tempering kit for Centerline CUH (net)

centerline by HOBART

Project _____

AIA # _____ SIS # _____

Item # _____ Quantity _____ C.S.I. Section 114000

CUL CHEMICAL SANITIZING
Undercounter



MODELS

❑ **CUL** Chemical sanitizing rinse

STANDARD FEATURES

+ 24 racks per hour
+ .84 gallons of water per rack
+ Chemical sanitizing
+ Top-mounted user interface with digital temperature display
+ 2-minute cycle with optional extended cycle
+ 14.46" door opening
+ Snap-in, revolving upper and lower anti-clogging wash & rinse arm; low-profile, single-arm design
+ Removable, 3-part stainless steel scrap screen
+ Soft start
+ Automatic pumped drain
+ Automatic fill
+ Service diagnostics with error notifications
+ Delime notification and cycle
+ Chemical pumps standard
+ Sanitizer sensing indicator standard
+ Electric tank heat
+ Two dishracks – one peg and one combination type

OPTIONS & ACCESSORIES (Available at extra cost)

❑ Upper/lower stainless steel wash and rinse arm kit
❑ Chemical sensing indicators (low chemical alert)
❑ Stainless steel stand with rack storage and telescoping legs (legs in provide 15 5/16" of additional height; legs out provide 17 7/8" of additional height)
❑ Peg rack
❑ Combination rack
❑ Power cord kits

SPECIFIER STATEMENT

Specified unit will be NSF rated, **Centerline™ by Hobart** chemical sanitizing undercounter dishwasher. Features soft start, two selectable cycles, one standard 2-minute cycle with optional extended cycle (factory set at 240 seconds); .84 gallons per rack, LED temperature and operator display, service diagnostics, detergent, rinse aid and sanitizer pumps. Constructed of stainless steel.

1 year parts and labor warranty.

STANDARD VOLTAGE

+ 120/60/1

CUL CHEMICAL SANITIZNG

Approved by _____ Date _____ Approved by _____ Date _____

centerline by HOBART

CUL CHEMICAL SANITIZING
Undercounter

LEGEND

Electrical Connections	
E1	Electrical connection: 1-3/8" dia. hole for 1" trade size conduit; 1-5/8" AFF.
Plumbing Connections	
P1	Single fill and rinse connection: 3/4" female garden hose fitting on 6' long hose supplied with machine; 120°F water minimum for CUL 140°F recommended.
P2	Drain connection: 19mm barb fitting with 6' long hose supplied with machine.
P3	Chemical supply: Detergent, sanitizer and rinse aid; approximately 1-5/8" AFF. 5-1/4" long tubing supplied with machine.

WARNING: Electrical and grounding connections must comply with the applicable portion of the National Electrical Code and/or other local electrical codes.

Plumbing connections must comply with applicable sanitary, safety, and plumbing codes.

SPECIFICATIONS

Capacities
- Cycle Time (seconds) 120
- Racks per Hour 24
- Tank Capacity – Gallons 5.3

Motor Horsepower
- Wash 0.62
- Rinse 0.20

Water Consumption
- U.S. Gallons per Hour (maximum use) 20.2
- U.S. Gallons per Rack (maximum use) 0.84
- Peak Drain Flow – U.S. Gallons (gallons per minute) 2.8

Temperatures °F
- Incoming Water Temperature (minimum recommended) . . . . . 120°F

Heating
- Tank Heat, electric (kW) 2.0

Standard 20" x 20" (508 x 508) Rack Complement
- Flat 1
- Peg 1

Shipping Weight (approximate) . . . . . 148 lbs.

Crated Dimensions . . . . . 27¼"W x 26½"L x 38¾"H

Heat Output, BTU/Hour		
Volts	Latent	Sensible
120	1,200	500

(E1) STANDARD ELECTRICAL OPTIONS

Voltage	Rated Amps	Minimum Supply Circuit Ampacity	Maximum Protective Device
120/60/1	17.5	20	20

NOTE: For supply connections, use copper wire only rated at 90°C minimum.

Accessory cord kit available for all models.

Dishmachine not provided with internal GFCI protection.

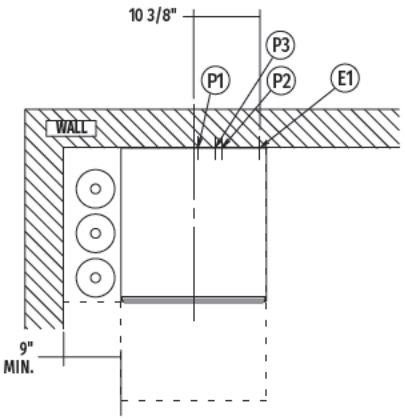

Top View

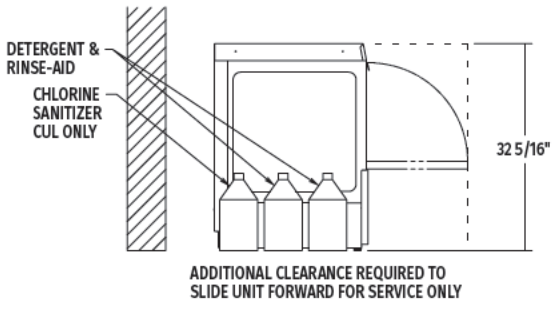

Left Side View

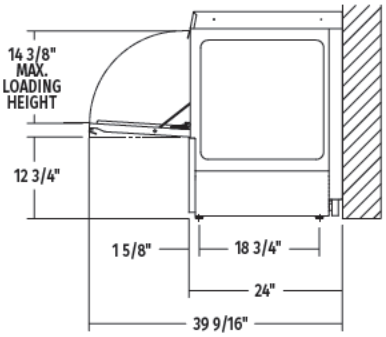

Right Side View

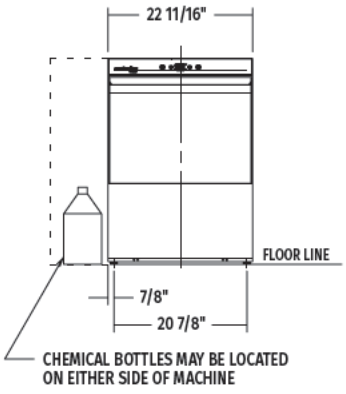

Front View

MODEL:
CUL
00-562543
REV E

As continued product improvement is a policy of Hobart, specifications are subject to change without notice.

CAD and/or Revit Files Available

BARING INDUSTRIES

Submittal Sheet

ITEM# 2.2.41 - 3-COMPARTMENT POT SINK (1 EA REQ'D)

CFE CUSTOM

3 Compartment Pot Sink: 68" x 30" x 34" High, with Backsplash, 7" Left Drainboard, 7" Right Drainboard, Crossbracing;
Bowls: 18"L x 14"D
Specifications: (unless otherwise noted in options below)
#14 Ga. S/S Coved Corner Construction, with S/S Reinforcement, 3" High Raised Roll Rim, 1-5/8" O.D. S/S Legs with S/S Adjustable Bullet Feet, Crossbracing: 1-1/4" O.D. S/S Tubing
Options Included:
(2) FAUCET BY OTHERS
(3) Drain, Rotary Waste with Connected Overflow
(3) Rotary Handle Support Bracket

BARING INDUSTRIES

Submittal Sheet

ITEM# 2.2.41.1 - WALL / SPLASH MOUNT FAUCET (2 EA REQ'D)

T&S Brass B-0231

Sink Mixing Faucet, wall mount, 8" centers, 12" swing nozzle, lever handles, quarter-turn Eterna cartridges, 1/2" NPT female inlets, low lead, ADA Compliant

ACCESSORIES

Mfr	Qty	Model	Spec
T&S Brass	2	B-WH4H-NS	Wrist Action Handle, 4" long, hot index & screw
T&S Brass	2	B-0230-K	Installation Kit, (2) 1/2" NPT nipples, lock nuts & washers, (2) short "Ell" 1/2" NPT female x male

T&S BRASS AND BRONZE WORKS, INC.
2 Saddleback Cove / P.O. Box 1088
Travelers Rest, SC 29690

Travelers Rest, SC: 800-476-4103 • Simi Valley, CA: 800-423-0150 • Fax: 864-834-3518 • www.tsbrass.com

Model No. **B-0231**

Item No.

ADA Compliant

This Space for Architect/Engineer Approval

Job Name_____ Date_____

Model Specified_____ Quantity_____

Customer/Wholesaler_____

Contractor_____

Architect/Engineer_____

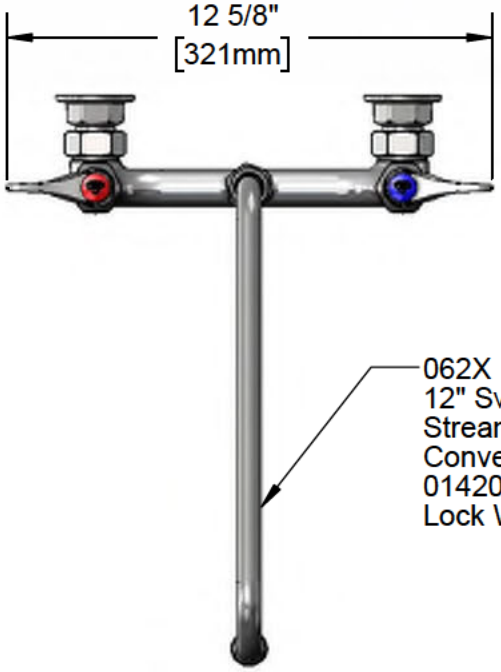



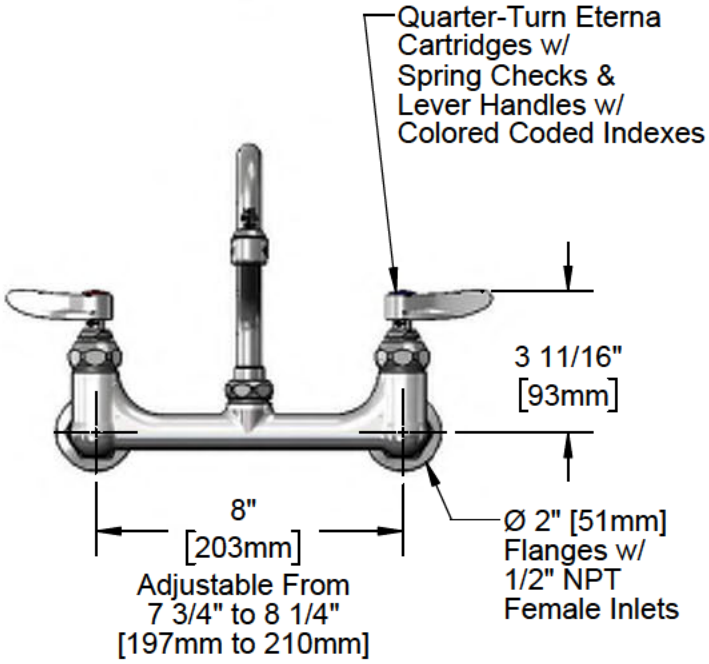

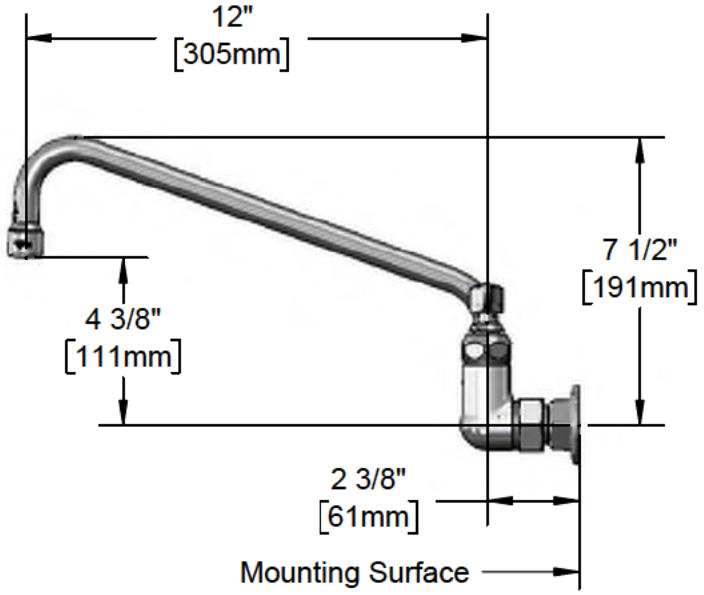

Product Specifications:
8" Wall Mount Mixing Faucet w/ Quarter-Turn Eterna Cartridges w/ Spring Checks, Lever Handles, 12" Swing Nozzle & 1/2" NPT Female Inlets

Product Compliance:
ASME A112.18.1 / CSA B125.1
NSF 61 - Section 9
NSF 372 (Low Lead Content)
ANSI A117.1 (ADA)

Drawn:	MRC	Checked:	JRM	Approved:	JHB	Date:	01/22/18	Scale:	1:5	Sheet:	1 of 2

CAM #24-0670
Exhibit 1

T&S BRASS AND BRONZE WORKS, INC.
2 Saddleback Cove / P.O. Box 1088
Travelers Rest, SC 29690

Travelers Rest, SC: 800-476-4103 • Simi Valley, CA: 800-423-0150 • Fax: 864-834-3518 • www.tsbrass.com

Model No. **B-0231**

Item No.

ITEM NO.	SALES NO.	DESCRIPTION
1	B-PT	Full Flow Stream Regulator, 55/64-27
2	062X	12" Swing Nozzle
3	009538-45	Swivel Washer
4	011429-45	Swivel Sleeves (2)
5	001074-45	O-Ring
6	014200-45	Star Washer, Anti-Rotation
7	002711-40NS	Quarter-Turn Eterna Cartridge w/ Spring Check, Handle, Blue Index & Screw, LTC
8	001019-45	Coupling Nut Washer
9	00AA	1/2" NPT Female Eccentric Flange
10	012442-40NS	Quarter-Turn Eterna Cartridge w/ Spring Check, LTC
11	001638-45NS	Lever Handle (New Style)
12	000925-45	Lab Handle Screw
13	018506-19NS	Blue Button Index, Press-in
14	002712-40NS	Quarter-Turn Eterna Cartridge w/ Spring Check, Handle, Red Index & Screw, RTC
15	012443-40NS	Quarter-Turn Eterna Cartridge w/ Spring Check, RTC
16	001193-19NS	Red Button Index, Press-in

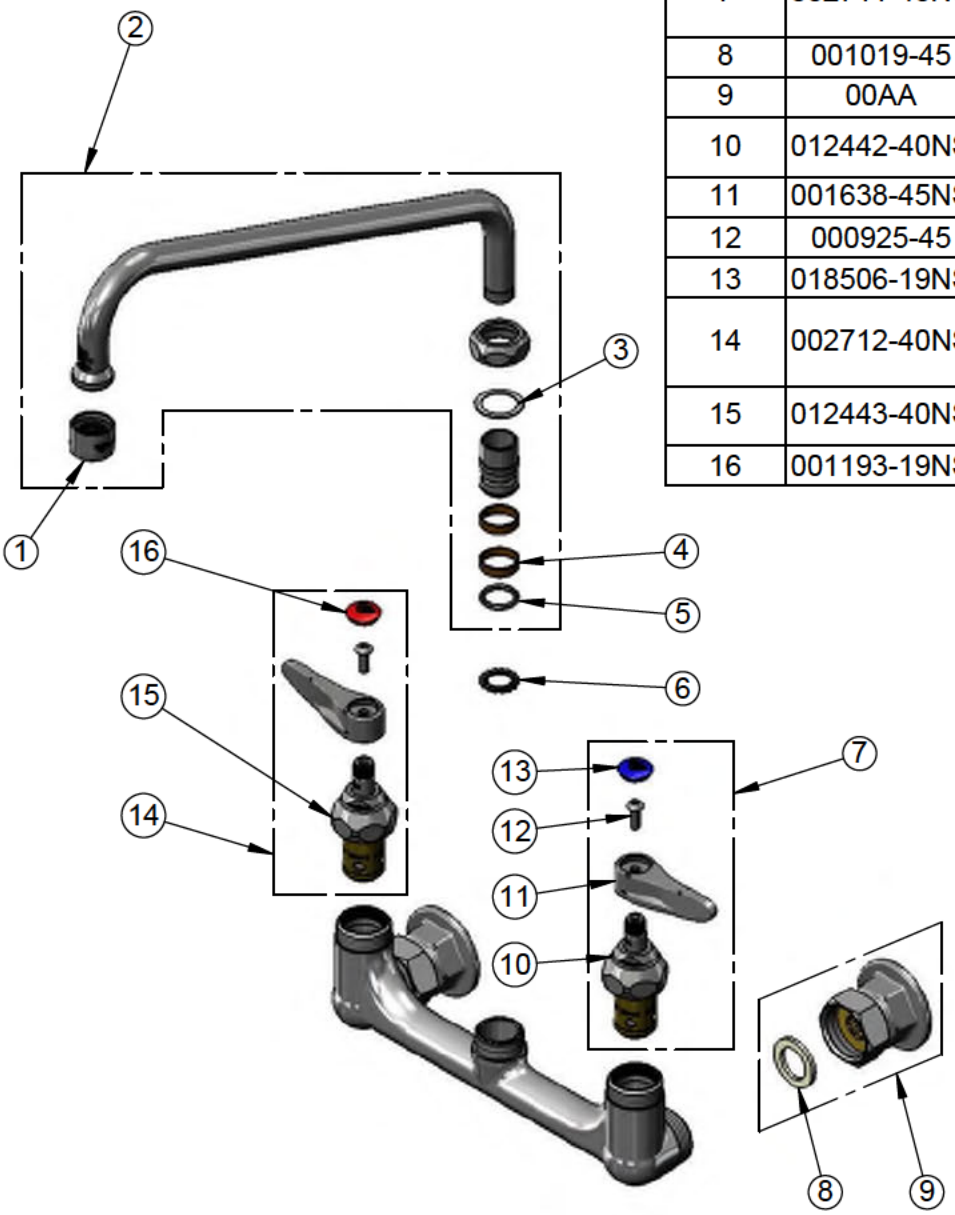

Product Specifications:
8" Wall Mount Mixing Faucet w/ Quarter-Turn Eterna Cartridges w/ Spring Checks, Lever Handles, 12" Swing Nozzle & 1/2" NPT Female Inlets

Product Compliance:
ASME A112.18.1 / CSA B125.1
NSF 61 - Section 9
NSF 372 (Low Lead Content)
ANSI A117.1 (ADA)

Drawn:	Checked:	Approved:	Date:	Scale:	Sheet:
MRC	JRM	JHB	01/22/18	NTS	2 of 2

CAM #24.0670
Exhibit F

T&S BRASS AND BRONZE WORKS, INC.
2 Saddleback Cove / P.O. Box 1088
Travelers Rest, SC 29690

Travelers Rest, SC: 800-476-4103 • Simi Valley, CA: 800-423-0150 • Fax: 864-834-3518 • www.tsbrass.com

Model No.
B-WH4H-NS

Item No.

This Space for Architect/Engineer Approval

Job Name_____ Date_____

Model Specified_____ Quantity_____

Customer/Wholesaler_____

Contractor_____

Architect/Engineer_____

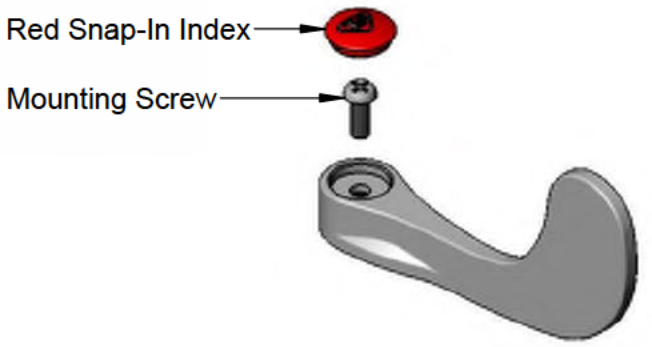

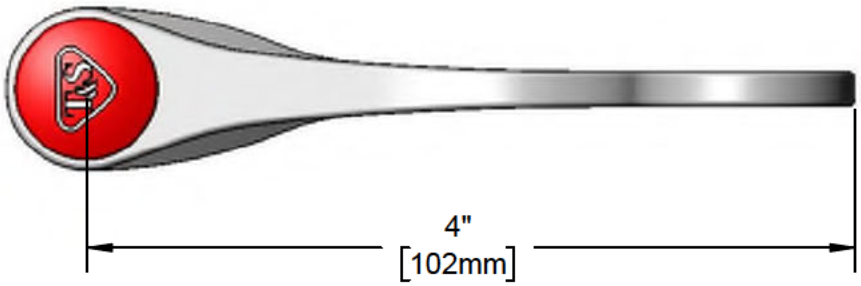

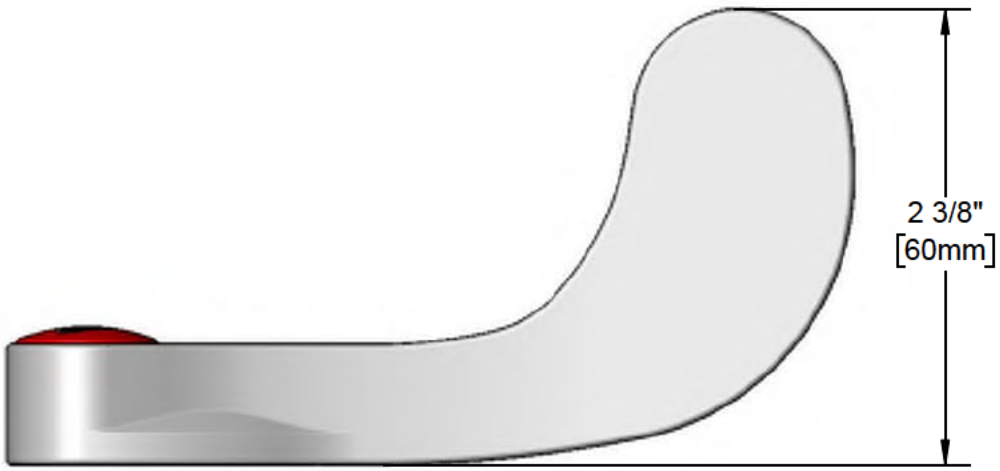



Product Specifications:
4" Wrist Action Handle w/ Red Index & Screw

Product Compliance:

Drawn:	KJG	Checked:	JRM	Approved:	JHB	Date:	03/15/17	Scale:	1:1	Sheet:	1 of 1

CAM #24-0670
Exhibit 1

T&S BRASS AND BRONZE WORKS, INC.
2 Saddleback Cove / P.O. Box 1088
Travelers Rest, SC 29690

Travelers Rest, SC: 800-476-4103 • Simi Valley, CA: 800-423-0150 • Fax: 864-834-3518 • www.tsbrass.com

Model No.
B-0230-K

Item No.

This Space for Architect/Engineer Approval

Job Name_____ Date_____

Model Specified_____ Quantity_____

Customer/Wholesaler_____

Contractor_____

Architect/Engineer_____

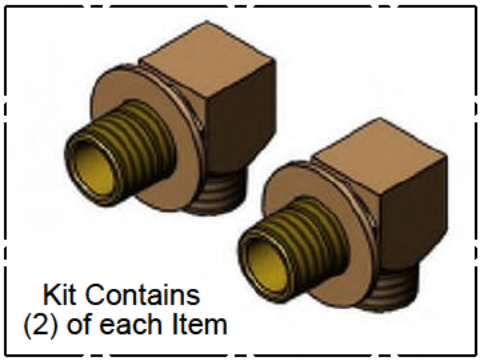

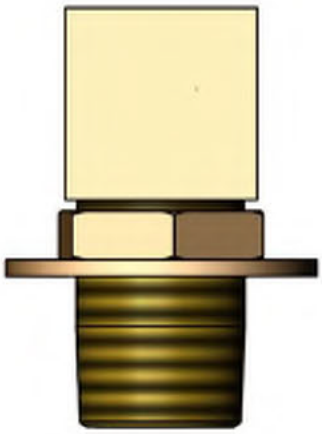

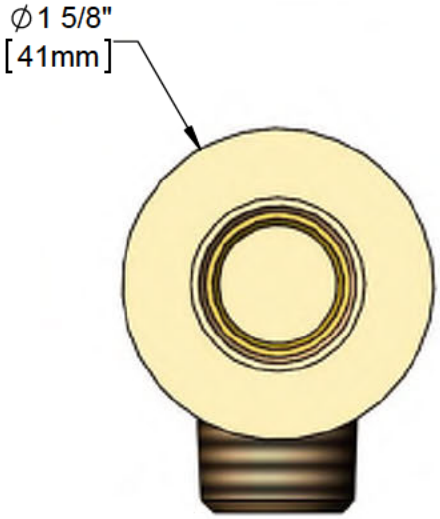

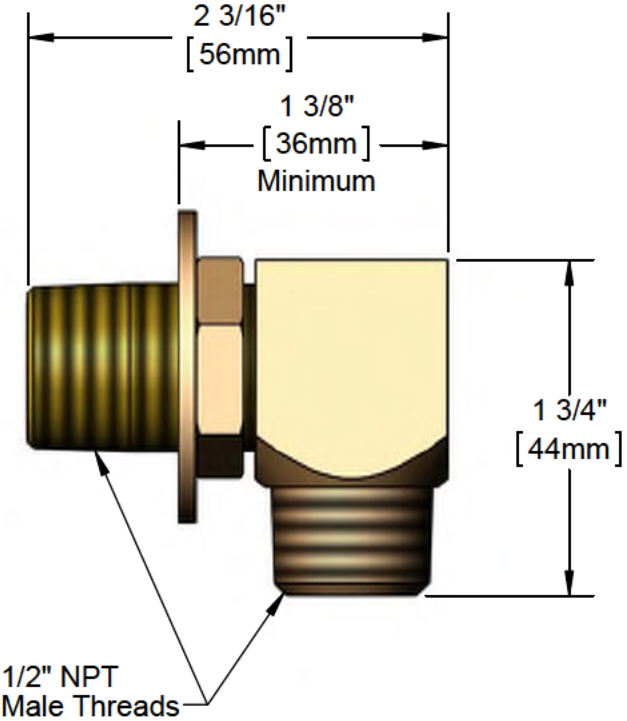

Product Specifications:
1/2" NPT Male Elbow Kit w/ Lock Nut & Washer

Product Compliance:
ASME A112.18.1 / CSA B125.1
NSF 61 - Section 9
NSF 372 (Low Lead Content)

Drawn:	DHL	Checked:	JRM	Approved:	JHB	Date:	03/13/14	Scale:	1:1	Sheet:	1 of 2

CAM #24-0670
Exhibit 1

T&S BRASS AND BRONZE WORKS, INC.
2 Saddleback Cove / P.O. Box 1088
Travelers Rest, SC 29690

Travelers Rest, SC: 800-476-4103 • Simi Valley, CA: 800-423-0150 • Fax: 864-834-3518 • www.tsbrass.com

Model No. **B-0230-K**

Item No.

ITEM NO.	SALES NO.	DESCRIPTION
1	000999-45	Brass Lock Washer
2	002954-45	Shank Lock Nut
3	013357-20	1/2" NPT x 1-5/8" Lg. Close Nipple

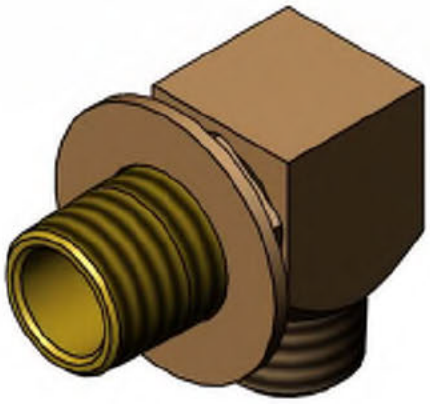

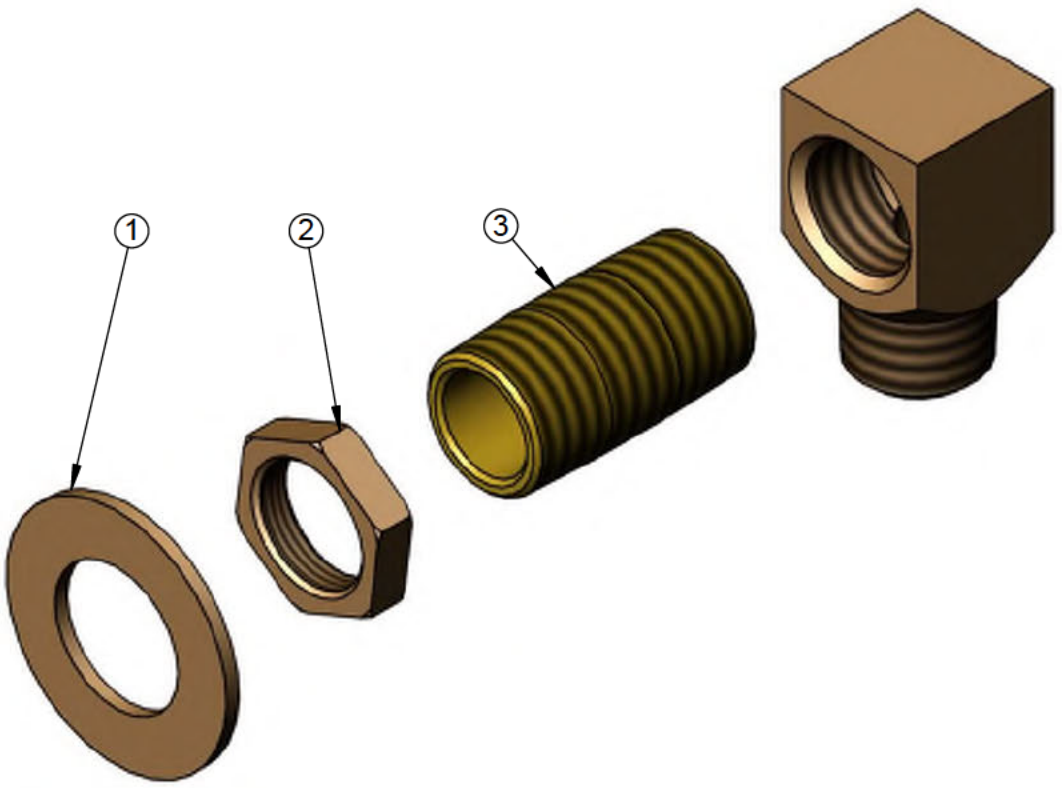

Product Specifications:
1/2" NPT Male Elbow Kit w/ Lock Nut & Washer

Product Compliance:
ASME A112.18.1 / CSA B125.1
NSF 61 - Section 9
NSF 372 (Low Lead Content)

Drawn:	Checked:	Approved:	Date:	Scale:	Sheet:
DHL	JRM	JHB	03/13/14	NTS	2 of 2

CAM #24-0670
Exhibit 2

BARING INDUSTRIES

Submittal Sheet

ITEM# EQ-3 - REACH-IN DUAL TEMP CABINET (2 EA REQ'D)

True Mfg. – Residential TR-36FRZ-L-SS-IM-C

Upright Freezer Column with built in Ice Maker, one-section 36"W, self-contained, left hinged stainless steel solid door, LED interior lighting, stainless steel interior & exterior, R-600A Refrigerant, 115v/60/1-ph, 2 amps, NEMA 5-15P, cULus, Made in USA

ACCESSORIES

Mfr	Qty	Model	Spec
True Mfg. – Residential	2		3 year parts and labor warranty, standard
True Mfg. – Residential	2		6 year sealed system parts and labor warranty, standard
True Mfg. – Residential	2		Stainless Steel Standard Hardware handles, hinges, and logo
True Mfg. – Residential	2		Side and Back finish: Galvanized steel, standard
True Mfg. – Residential	2		Stainless Steel interior, standard
True Mfg. – Residential	2		Leg levelers (front) and Castors (rear), standard
True Mfg. – Residential	2		30, 36, 42 or 48 End Panel Kit With Left and Right Stainless Panels
True Mfg. – Residential	2		90 Degree Door Stop – RIGHT

36" FREEZER COLUMN WITH INTEGRATED ICE MAKER

TR-36FRZ-R/L-SS-IM-C

TR-36FRZ-R-SS-IM-C (Right hinged, integrated ice maker)

TR-36FRZ-L-SS-IM-C (Left hinged, integrated ice maker)



FEATURES

- Environmentally friendly R600a refrigerant
- Balanced, forced-air refrigeration system enables proper airflow and even temperature throughout to keep food fresh.
- Industry exclusive, 300-series stainless steel interior and exterior.
- All stainless steel, beautifully crafted proud hinges pass True's rigorous one million door opening test.
- Beautifully crafted solid stainless steel door with 120˚ stay-open feature and ergonomically designed, robust, tubular handle.
- Built-in Ice Maker produces up to 3lbs./day of prism shaped ice with 5 lbs. storage capacity.
- Ramp-up, showcase interior LED lighting provides amazing illumination throughout.
- Intuitive True Precision® Control and readout provides digital accuracy and easy operation.
- Temperature as low as -4˚F.

ORGANIZATION

- 3 adjustable/removable electropolished stainless steel wire shelves.
- 1 fixed electropolished stainless steel wire shelves.
- 3 full-extension, soft-close wire bins.

BUILD YOUR TRUE

Customize your True with a variety of finish and hardware options at true-residential.com/custom.

SPECIFICATIONS

Dimensions (w x h x d)	36" x 84" x 24"
Cutout Dimensions (w x h x d)	
Flush Opening	36¼" x 84¼" x 26"
Standard Opening	35¾" x 84" x 24"
Capacity (cu. ft.)	19.1
Temperature Range	-4˚F – 4˚F
Water Supply	¼" O.D. braided stainless steel or PEX tubing (¼" O.D. lines and fittings not included). **Note:** Copper line is not recommended.
Flow Rate (gpm/lpm)	0.5 / 1.89
Operating Pressure psi (kPa)	30 (207) – 100 (689)
Incoming Water Temperature	33 – 100˚F (0.6 – 38˚C)
Weight (lbs.)	615
Voltage	115/60/1 115/60/1 NEMA-5-15R
Amps	2
Annual Energy Consumption (kwh)	466
Power Cord Length (ft.)	9
Energy Star Rated	Yes

2001 East Terra Lane I O'Fallon, MO 63366-4434 I p 636.240.2400 I f 636.272.7546 I true-residential.com I info@true-residential.com

36" FREEZER COLUMN WITH INTEGRATED ICE MAKER

TR-36FRZ-R/L-SS-IM-C

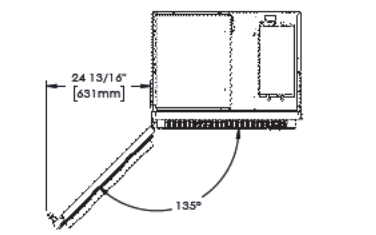

TOP

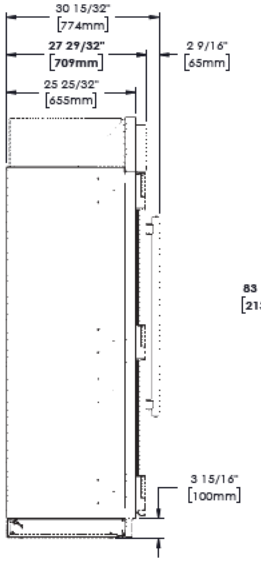

SIDE

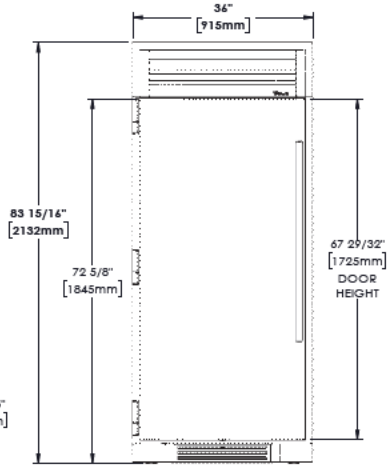

FRONT

OPENING DIMENSIONS

FLUSH OPENING

WIDTH	HEIGHT	DEPTH
36¼"	84¼"	26"

STANDARD OPENING

WIDTH	HEIGHT	DEPTH
35¾"	84"	24"

TOP

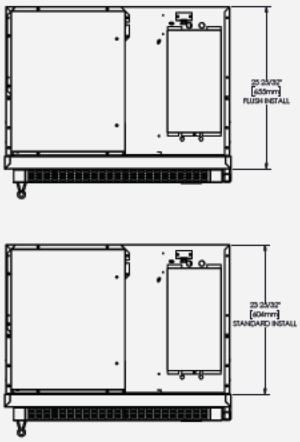

BACK

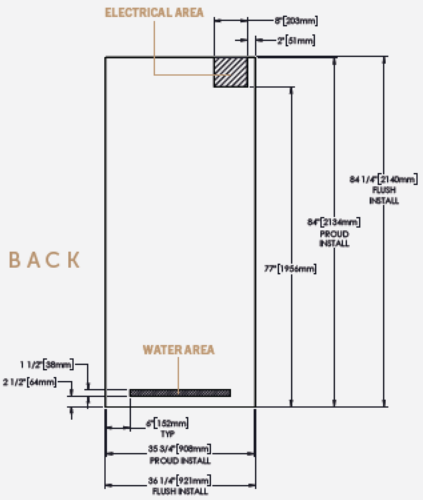

MODEL OPTIONS

MODEL	FINISH
TR-36FRZ-R-SS-IM-C	Stainless solid door, right-hinged, integrated ice maker
TR-36FRZ-L-SS-IM-C	Stainless solid door, left-hinged, integrated ice maker

ACCESSORIES (OPTIONAL)

- Joining kit
- Side panel(s)
- Full size anti-condensation pad

WARRANTY

3 year full (parts & labor)
6 year sealed system (parts & labor)
7–12 year (parts only – sealed system on registered products)

BARING INDUSTRIES

Submittal Sheet

ITEM# EQ-3.1 - WATER FILTRATION SYSTEM, FOR ICE MACHINES (2 EA REQ'D)

Everpure EV932401

Insurice® Water Filtration System, Insurice® Single-i2000², Single, (1) i2000² Micro-Pure® II Precoat primary filtration cartridge, reduces chlorine, taste & odor, inhibits scale, outlet pressure gauge, flushing valve, 9,000 gallons, 1.67 gpm, 0.5 micron, 3/8" inlet, 3/8" outlet, NSF 42 & 53 (EV932401)

EVERPURE® INSURICE® SINGLE - i2000² SYSTEM

DELIVERS PREMIUM QUALITY WATER FOR ICE APPLICATIONS

Insurice Single - i2000² System: EV9324-01
i2000² Replacement Cartridge: EV9612-22



APPLICATIONS

Ice Machines

- Cubers 500 lbs/day
- Flakers 1,500 lbs/day
- Capacity: 9,000 gals

FEATURES • BENEFITS

Reduces water-related ice machine problems caused by scale buildup from dirt and dissolved minerals

Sanitary cartridge replacement is simple, quick and clean. Internal filter parts are never exposed to handling or contamination

Reduces maintenance and service costs by reducing scale and clogging of distribution lines, evaporator plate and pump

Exclusive precoat filtration provides superior chlorine taste & odor reduction and micro-filters dirt and particles as small as 0.5 micron in size by mechanical means

Proprietary Micro-Pure® II filtration media effectively inhibits the growth of bacteria on the filter media that can decrease product life

Reduces chlorine taste & odor and other offensive contaminants

Self-contained scale inhibitor feed keeps ice machines functioning at full capacity

NSF/ANSI Standard 53 certified to reduce cysts such as *Cryptosporidium* and *Giardia* by mechanical means

INSTALLATION TIPS

Choose a mounting location suitable to support the full weight of the system when operating.

Never use saddle valve for connection.

Use 3/8" water line.

Do not connect system to water-cooled condenser.

Install vertically with cartridges hanging down and allow 2½" (6.35 cm) clearance below the cartridge for easy cartridge replacement.

Flush cartridges by running water through system for five (5) minutes at full flow.

OPERATION TIPS

Change cartridges on a regular six (6) month preventative maintenance program.

Change cartridges when capacity is reached or when flow becomes too slow.

Service flow rate must not exceed 1.67 gpm (6.3 Lpm).

Always flush the filter cartridge at time of installation and cartridge change.

SIZING

Service Flow Rate: Maximum 1.67 gpm (6.3 Lpm)

EVERPURE® INSURICE® SINGLE - i2000² SYSTEM

EV9324-01

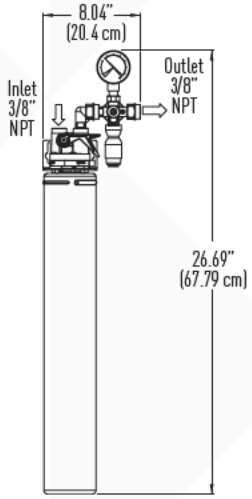

SPECIFICATIONS

Service Flow Rate
Maximum 1.67 gpm (6.3 Lpm)

Pressure Requirements
10 – 125 psi (0.7 – 8.6 bar), non-shock

Temperature
35 – 100°F (2 – 38°C)

Overall Dimensions
26.69" H x 8.04" W x 5.25" D
(67.79 cm x 20.4 cm x 13.3 cm)

Inlet Connection
3/8"

Outlet Connection
3/8"

Electrical Connection
None required

Shipping Weight
6 lbs (2.7 kgs)

Operating Weight
9 lbs (4 kgs)

System Tested and Certified by NSF International against NSF/ANSI Standards 42 and 53 for the reduction of:

STANDARD NO. 42 — AESTHETIC EFFECTS

Chemical Reduction
Taste & Odor
Chlorine

Mechanical Filtration
Nominal Particulate Class I

STANDARD NO. 53 – HEALTH EFFECTS

Mechanical Filtration
Cyst

EPA No. 002623-IL-002

The contaminants or other substances removed or reduced by this drinking water system are not necessarily in your water. Do not use with water that is microbiologically unsafe or of unknown quality without adequate disinfection before or after the system. Systems certified for cyst reduction may be used with disinfected water that may contain filterable cysts.

WARRANTY

Everpure water treatment systems by Pentair® (excluding replaceable elements) are covered by a limited warranty against defects in material and workmanship for a period of five years after date of purchase. Everpure replaceable elements (filter cartridges and water treatment cartridges) are covered by a limited warranty against defects in material and workmanship for a period of one year after date of purchase. See printed warranty for details. Pentair will provide a copy of the warranty upon request.

PENTAIR

WATER QUALITY SYSTEMS

EVERPURE-SHURFLO WORLD HEADQUARTERS, 1040 MUIRFIELD DRIVE, HANOVER PARK, IL 60133 USA • FOODSERVICE.PENTAIR.COM
800.942.1153 (US ONLY) • 630.307.3000 MAIN • 630.307.3030 FAX • CSEVERPURE@PENTAIR.COM EMAIL

EVERPURE-SHURFLO AUSTRALIA, 1-21 MONASH DRIVE, DANDENONG SOUTH, VIC 3175 AUSTRALIA
011.1300 576 190 TEL • 011.61.39.562.7237 FAX • AU.EVERPURE@PENTAIR.COM EMAIL

EVERPURE-SHURFLO CHINA, 21F CLOUD 9 PLAZA, NO 1118, SHANGHAI, 200052, CHINA
86.21.3211.4588 TEL • 86.21.3211.4580 FAX • CHINA.WATER@PENTAIR.COM EMAIL

EVERPURE-SHURFLO INDIA, GREEN BOULEVARD, B-9/A, 7TH FLOOR - TOWER B SECTOR 62, NOIDA - 201301
91.120.419.9444 TEL • 91.120.419.9400 FAX • INDIACUSTOMER@PENTAIR.COM EMAIL

EVERPURE-SHURFLO EUROPE, PENTAIR WATER BELGIUM BVBA, INDUSTRIEPARK WOLFSTEE, TOEKOMSTLAAN 30, B-2200 HERENTALS, BELGIUM
+32.(0).14.283.504 TEL • +32.(0).14.283.505 FAX • SALES@EVERPURE-EUROPE.COM EMAIL

EVERPURE-SHURFLO JAPAN INC., HASHIMOTO MN BLDG. 7F, 3-25-1 HASHIMOTO, MIDORI-KU, SAGAMIHARA-SHI KANAGAWA 252-0143, JAPAN
81.(0)42.775.3011 TEL • 81.(0)42.775.3015 FAX • INFO@EVERPURE.CO.JP EMAIL

EVERPURE-SHURFLO SOUTHEAST ASIA, 390 HAVELOCK ROAD, #04-01 KING'S CENTRE, SINGAPORE 169662
65.6768.5800 TEL • 65.6737.5149 FAX • CSEVERPURE@PENTAIR.COM EMAIL

All Pentair trademarks and logos are owned by Pentair, Inc. or its affiliates. All other registered and unregistered trademarks and logos are the property of their respective owners. Because we are continuously improving our products and services, Pentair reserves the right to change specifications without prior notice. Pentair is an equal opportunity employer.

© 2016 Pentair Filtration Solutions, LLC. All Rights Reserved.

BARING INDUSTRIES

Submittal Sheet

ITEM# EQ-7 - ICE MAKER WITH BIN, CUBE-STYLE (2 EA REQ'D)

Ice-O-Matic ICEU220HA

ICE Series™ Cube Ice Maker, cube-style, undercounter, air-cooled, self-contained condenser, approximately 238 lb/108 kg production/24 hours, 70 lb. built-in bin, half-size cube, cULus, NSF, CE

ACCESSORIES

Mfr	Qty	Model	Spec
Ice-O-Matic	2		3 yr. parts & labor warranty, standard
Ice-O-Matic	2		5 yr. parts on the compressor warranty, standard
Ice-O-Matic	2		5 yr. evaporator warranty, standard
Ice-O-Matic	2		115v/60/1-ph, 11.6 amps, standard
Ice-O-Matic	2	IFI4C	In-line Water Filter Cartridge, single, designed for use with ice makers, with IsoNet® scale inhibitor, 1/4" compression, for max. cube capacity 600 lb/day, 1.0 gpm, 10 micron (volume pricing available 40+ cartridges), NSF

ICEU220/226/225 - SELF CONTAINED CUBE ICE MAKER

Ice-O-Matic
Ice. Pure and Simple



ICEU220

Features

- Space-saving 24" (623 mm) wide undercounter design.
- Produces up to 251 lbs (114 kg) of ice per day.
- *Harvest Assist* provides consistent ice production for the life of the ice maker while reducing energy consumption and increasing capacity.
- *Pure Ice®* exclusively by Ice-O-Matic. Built-in antimicrobial protection for the life of the ice maker inhibits bacteria growth on ice maker surfaces. Ice-O-Matic's optional water filtration system provides protection against unpleasant tastes, odors and scale formation.
- Durable, electroless nickel plating on all evaporator plates ensures reliability.
- *Longest warranty in the industry.* Purchase an Ice-O-Matic water filter with your cube ice maker, replace the filter every six months, and the evaporator warranty is extended to 7 years parts and labor *(available in the U.S. and Canada only).*
- Constructed from corrosion-resistant stainless steel and fingerprint-proof plastic.

Options & Accessories

WATER FILTERS			
Ice Machine Model	Manifold		Inline
	System	Replacement	System
ICEU220	IFQ1	IOMQ (1)	IFI4C / IFI8C
ICEU226			
ICEU225			

Ice Maker Warranty

Every Ice-O-Matic ice maker is backed by a warranty that provides both parts and labor coverage.

- Three years **Parts** and **Labor**.
- Five years **Parts** coverage on the evaporator and compressor.
- Seven years **Parts** and **Labor** on the evaporator when you purchase an Ice-O-Matic water filter with your cube ice maker and replace the filter every six months *(available in the U.S. and Canada only).*

Ice Form



CUBE

FULL CUBE DIMENSIONS	
W x D x H (in.)	7/8 x 7/8 x 7/8
W x D x H (mm)	22 x 22 x 22
HALF CUBE DIMENSIONS	
W x D x H (in.)	3/8 x 7/8 x 7/8
W x D x H (mm)	10 x 22 x 22

Space-Saving Solutions

- Front air discharge design for compact spaces.
- Low profile top saves counter space.
- Stores up to 74 lbs (33.5 kg) of ice.
- Easy front access to ice.
- Available with an air-cooled or water-cooled condenser.

ICEU220/226/225 SELF CONTAINED CUBE ICE MAKER

ICEU220/226/225 - SELF CONTAINED CUBE ICE MAKER

Ice-O-Matic
Ice. Pure and Simple

ICEU220/226/225 SELF CONTAINED CUBE ICE MAKER

Air and Water Cooled

A. Ice maker water in 3/8" FPT.
B. Bin and ice maker drain, 3/4" FPT.
C. Hole for electrical connections, 7/8" (Cord on 115V).
D. Condenser water in, 3/8" FPT (water cooled units only).
E. Condenser water out, 1/2" FPT (water cooled units only).

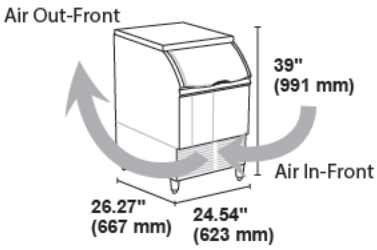

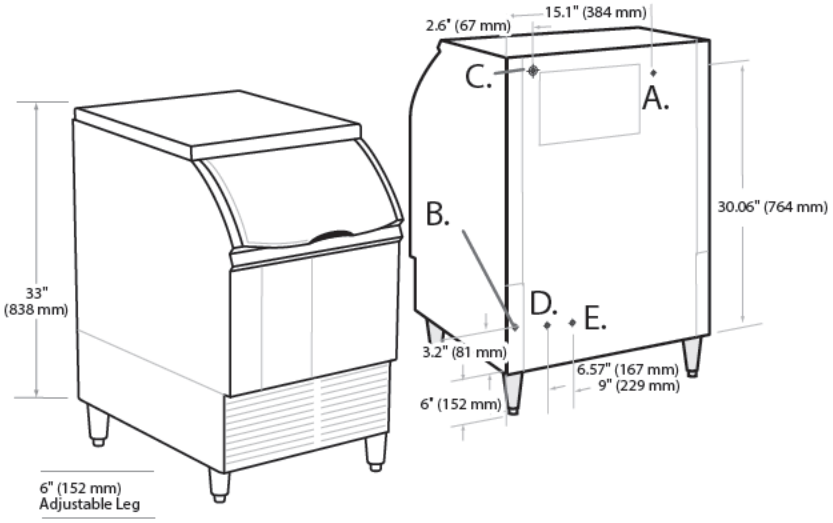

Front & Rear View

Operating Requirements

	MINIMUM	MAXIMUM	
		60 Hz	50 Hz
Ambient Temp. Range Air	50°F (10°C)	100°F (38°C)	110°F (43°C)
Water Temp.	40°F (4.4°C)		
Water Pressure	20 PSIG (1.4 BAR)	60 PSIG (4.1 BAR)	

Dimensions

ALL MODELS	
W x D x H (in.)	24.54 x 26.27 x 39
W x D x H (mm)	623 x 667 x 991

Specifications

Model Number	Cond. Unit	Ice Production per 24hrs 70°F air/ 50°F water lbs (kg)	Ice Production per 24hrs 90°F air/ 70°F water lbs (kg)	Water Usage gallons per 100 lbs of Ice 90°F air/70°F water Potable	Water Usage gallons per 100 lbs of Ice 90°F air/70°F water Condenser	kWH Used per 100 lbs of ice @ 90°F air/ 70°F water	Voltage Characteristics	Min. Circuit Ampacity	Max Breaker Size	Approx. BTUs per hour**
ICEU220A*	Air	238 (108)	165 (74)	25.0	N/A	7.4	115/60/1	11.9	15	5,000
ICEU220W*	Water	251 (114)	193 (88)		193	5.6		8.9		
ICEU226A	Air	241 (109)	166 (75)		N/A	8.0	208-230/60/1	6.0	15	
ICEU226W	Water	232 (105)	159 (72)		179	6.1		4.1		
ICEU225A	Air	211 (96)	143 (65)		N/A	8.8	208-230/60/1	4.9	16	4,000
ICEU225W	Water	210 (95)	174 (79)		156	6.3		4.4		

***BTUH is calculated 0°F Evaporator, 100°F Condensing, and 33 PSIG.*

NOTES:
Number of Wires: 3 (including ground)
Approx. Shipping Weight lbs (kg): ICEU220A 160 (73) • ICEU220W 160 (73) • ICEU226A 160 (73) • ICEU226W 160 (73) • ICEU225A 160 (73) • ICEU225W 160 (73)
Refrigerant Type: ICEU225A = R404A
*Cordset included with 115V units.

11100 E. 45th Avenue • Denver, CO 80239 • Phone: 1. 866. PURE. ICE • Fax: 303. 371. 6296 • www.iceomatic.com

Rev: 05/21

WATER FILTERS

Ice-O-Matic
Ice. Pure and Simple

IFQ1-S SYSTEM



10.4" H x 6" W x 4" D
(264 mm x 152 mm x 102 mm)

Single Cartridge with a Quick Disconnect

IFQ1 SYSTEM



15" H x 6" W x 4" D
(381 mm x 152 mm x 102 mm)

Single Cartridge with a Quick Disconnect

IFQ2 SYSTEM



16" H x 10" W x 7.125" D
(406 mm x 254 mm x 181 mm

Dual Cartridge with a Quick Disconnect

IFQ1-XL SYSTEM



21" H x 6" W x 4" D
(533 mm x 152 mm x 102 mm)

Single Cartridge with a Quick Disconnect

IFQ2-XL SYSTEM



23.21" H x 13" W x 4.65" D
(590 mm x 330 mm x 118 mm

Dual Cartridge with a Quick Disconnect

IF14C & IF18C SYSTEMS



11.75" H x 2.75" W
(279 mm x 57 mm)

Filter supplied with 1/4" or 3/8" (6 or 8 mm) compression

ICE MAKING CAPACITY: Up to 600 lbs. (272 kg)
Ideal for limited-space and undercounter applications

REPLACEMENT FILTER CARTRIDGES



IOMQ-S IOMQ-XL

IOMQ

Snapshot

IFQ Series water treatment systems reduce sediment down to 1/2 micron and reduce chlorine, taste and odor at a flow rate of up to 3.0. The systems include IsoNet®, which delivers consistent protection against the precipitation and accumulation of scale and provides a protective barrier to help guard against corrosion.

Features and Benefits

- Reduces maintenance frequency and cost, and extends equipment life.
- Improves equipment operating efficiency
- Incorporates IsoNet – patented scale-inhibiting technology.
- Gradient-density depth filtration reduces dirt, rust and other debris as small as 1/2 micron to ensure clean, clear ice and protect solenoids, valves and other fittings against wear and plugging.
- High-capacity activated carbon filtration reduces taste and odor and protects equipment against corrosive chlorine.
- 1/4 turn QT "Quick-Twist" cartridge makes changing the filter quick, easy and sanitary.
- Wall-mount bracket and full-flow inlet shut-off valve make installation simple.
- Certifies to NSF Standard 42

All filter systems include:

Filter cartridge with FDA approved scale inhibitor, inlet shut-off valve, gauge and quick-connect fittings.

IOMQ replacement cartridges for use with IFQ1 & IFQ2 manifold filter systems. IOMQ1XL replacement cartridge for use with IFQ1-XL manifold filter system.

WATER FILTERS

Ice-O-Matic
Ice. Pure and Simple

WATER FILTERS

IFQ SERIES FILTER SYSTEM							
Model Number	Description	Service Flow Rate Max. gpm (lpm)	Capacity Gal (L)	Operating Pressure Range Psi (bar)	Inlet Water Temp Range °F (°C)	Micron Rating	Approx. Shipping Weight lbs (kg)
IFQ1-S	Single Filter	.75 (2.84)	6,000 (22,712)	10 - 125 (0.7 - 8.6)	35 - 100 (1.7 - 38)	.5	2 (.91)
IFQ1	Single Filter	1.5 (5.68)	15,000 (56,775)				3 (1.3)
IFQ1-XL	Single Filter	2.25 (8.5)	22,500 (85,162)				5 (2.3)
IFQ2	Dual Filter	3.0 (11.4)	30,000 (113,550)				7 (3.2)
IFQ2-XL	Dual Filter	4.5 (17)	45,000 (170,344)				9 (4.1)

SINGLE INLINE FILTER CARTRIDGES						
Model Number	Description	Service Flow Rate Max. gpm (lpm)	Operating Pressure Range Psi (bar)	Inlet Water Temp Range °F (°C)	Micron Rating	Approx. Shipping Weight lbs (kg)
IFI4C	Single Inline Cartridge 1/4" (6.35mm) compression	1.0 (3.79)	10 - 100 (.07 - 6.9)	35 - 100 (2 - 38)	10	2 (1)
IFI8C	Single Inline Cartridge 3/8" (9.53mm) compression					

WATER FILTERS							
		IFQ1-S	IFQ1	IFQ1-XL	IFQ2	IFQ2-XL	IF14C IF18C
CUBE ICE	ICEU070	X					X
	ICEU150 - ICEU220 - ICEU300	X					X
	CIM0320 - CIM0430		X				
	CIM0520 - CIM0630			X			
	CIM0826 - CIM1136				X		
	CIM1446 - CIM1545				X		
	CIM1845 - CIM2046					X	
	ICE1506 - MODULAR				X		
	UCG080 - UCG130*	X					
FLAKE ICE	MFI0500	X					X
	MFI0800 - MFI1256			X			
	MFI1506				X		
	MFI2306					X	
PEARL ICE	GEMU090	X					X
	GEM0450 – GEM0650		X				
	GEM0956			X			
	GEM1306				X		
	GEM2006					X	

* Gourmet Ice

Installation Tips

Feed-water connection to system should be COLD only.

Do not exceed system specifications for temperature and pressure.

Allow 3" clearance below system for cartridge removal and replacement.

Connect filtered water line to ice connections only. Do not use for condenser water.

No activation procedure or flushing is required for system to perform as specified.

Extended Warranty Program

- Buy a new Ice-O-Matic Water Filter System with a new CIM Series™ Cube ice maker, replace the filter cartridge every 6 months, and Ice-O-Matic will extend the limited cuber evaporator warranty to 7 years parts and labor (U.S. and Canada only).
- New ice maker and filter must be installed at the same time.
- Ice maker and water filter must be registered with Ice-O-Matic within 10 days of installation. Register ice maker and filter at **Iceomatic.com/warranty**.
- Water filters must be changed every 180 days (6 months), at a minimum. All changes must be registered with Ice-O-Matic and include the water filter's model and serial numbers. Register water filter changes at www.iceomatic.com.
- Program is available with all Ice-O-Matic IFQ1-S, IFQ1, IFQ1-XL, IFQ2, IFQ2-XL, IFI4C or IFI8C water filter systems.
- Replacement filter must be Ice-O-Matic models.

11100 E. 45th Avenue • Denver, CO 80239 • Phone: 1. 866. PURE. ICE • Fax: 303. 371. 6296 • www.iceomatic.com

Edward Don & Company

03/18/2024

Quotation

To: Moss and Associates
Michael Perez

From: Edward Don & Co. - Miramar
Richard Snook
11500 Miramar Parkway, Suite 600
Miramar, FL 33025
954-378-7088
330-417-3287 (Contact)

Project: Copy of FORT LAUDERDALE POLICE STATION 03/2024
1300 W Broward Blvd
Michael Perez-Gurri
Fort Lauderdale, FL 33312

Edward Don & Company is pleased to offer the following proposal.
We are bidding Section 11400-Food Service Equipment, deliver and set in place as per plans and specs of this project with no exception taken.
Mechanical, plumbing and/or electrical rough-ins and final connections are not included.
It is the Clients (CUSTOMER) responsibility to check each item on quotation to determine correct items are quoted.
Project Manager will go over each items with Client before order is place to insure accuracy.
Project Manager will meet with General contractor to review schedule
Project Manager will visit site to field measure for rough ins
All shop drawings need to be signed off on by Client/General Contractor
Nothing is included that is NOT on quotation.

Item	Qty	Description	Net	Net Total
1	1 ea	**EXHAUST SYSTEM** ADVANCED HOOD SYSTEMS 6544961 Hood #1 - H-1 - Job #6544961 5424AH-ND-2-PSP-F - 11ft 0" Long Exhaust-Only Wall Canopy Hood with 14" Wide Front Perforated Supply Plenum with Built-in 3" Back Standoff x1 - 430 SS Where Exposed x1 - Insulation for the PSP Housing - Front x1 - Fire Cabinet on the Left Side 12.00" Width x 54.00" Length x 24.00" Height (Additional charges may apply for cabinet if not sold with fire system) x1 - FILTER - 20" tall x 16" wide Kleen-Gard Stainless Steel Baffle Filter with Handles and Bottom Hanging Hook, UL Classified x8 - L55 Series E26 Canopy Light Fixture - High Temp Assembly, Includes Clear Thermal and Shock Resistant Globe (L55 Fixture), Bulbs By Others x4 - Extra Fixtures- L55 Series E26 Canopy Light Fixture - High Temp	8,397.92	8,397.92

Exhaust System Line Item
To Furnish & Install Totaling
$107,252.40 Supersedes The
Exhaust System Line Item On
The Edward Don & Company Proposal
Dated 03/12/24.

Moss / MPG / 03/20/24

Item	Qty	Description	Net	Net Total
		Assembly, Includes Clear Thermal and Shock Resistant Globe (L55 Fixture) x3 - EXHAUST RISER - Factory installed 12" X 12" X 4" x1 - SUPPLY RISER - 12"x 20" Supply Riser with Volume Dampers x3 - 1/2 Pint Grease Cup New Style, Flanged Slotted x2 - FIELD WRAPPER 18.00" High Front, Left, Right x1 - Electrical Package Installation in Utility Cabinet by Plant. x1 - BACKSPLASH 122.00" High X 180.00" Long 430 SS Vertical (Includes End Caps & Divider Bars) x1 - Parts required to mount riser sensor 6 inches beside riser. Sensor installed directly in line with the center of riser and in center of the plenum space front to back. x1 - RIGHT WIDE VERTICAL END PANEL 42" Top Width, 36" Bottom Width, 80" High Insulated 430 SS x1 - LEFT WIDE VERTICAL END PANEL 42" Top Width, 36" Bottom Width, 80" High Insulated 430 SS x1 Hood #1		
1 ea		6544961 Fire System #1 - FS - Job #6544961 – See Hookup Price below TANK-SP-2 Tank Fire Suppression 8 gallon Fire System in Utility Cabinet (includes pre-piped hood(s) with electric detection, tank(s), 24 VDC release mechanism, fire system agent, pressurized tanks, and electric pull station). (Formerly CAS-EWC). Includes piping for hood: 1. x1 - Tank-based Fire Protection System equipped with Electronic Detection utilizing CORE board as a Listed Release Mechanism. Installed in Hood Utility Cabinet with integral hood prewire panel. x1 - Pressure Switch - Monitors Tank Pressure, Supervised Signal, TANK FIRE SUPPRESSION x1 - SC-EGVA2 GAS VALVE - 2" Electrical Shutoff Valve for use with HMI reset, 110V, 60Hz (#8214280). Includes upstream strainer assembly. x1 Fire System #1	5,070.02	5,070.02
1 ea		6544961 Fan #1 AH-DU180HFA - Exhaust Fan (KEF-1) - Job #6544961 AH-DU180HFA High Speed Direct Drive Centrifugal Upblast Exhaust Fan with, disconnect switch and 18-3/4" wheel. Exhaust Fan handles 2200 CFM @ -1.200" wc ESP, Fan runs at 1092 RPM. Exhaust Motor: 2.000 HP, 3 Phs, 208 V, 60 Hz, 6.1 FLA, ODP, Premium (E-Plus3) Eff. x1 - Grease Cup for kitchen-duty centrifugal exhaust fans, Box Dimensions 17-1/8 L X 5-1/16 W X 3-3/4 H (20 Gauge) (Includes Down Spout) x1 - Miami Dade Impact and Wind Load Certification +150 / -150 PSF - Miami Dade County Product Control Approved. Florida Building Code approval. Roof & Wall Mount Exhaust Curbs up to 20" high must be 20 gauge Aluminized. Roof & Wall Mount Exhaust Curbs above 20" high up to 42" high must be 18 Gauge Aluminized. x1 - KEF-1 Curb CRB26.5x20E On Fan #1 Flat Curb x1 - Hinged Base for Curb. Standard Hinge attached to curb. Used on Fans with wheels 20 inches or smaller. 12 GA Galvanized. x1 - Vented Base for Curb x1 Fan	1,657.17	1,657.17
1 ea		6544961 Fan #2 AH-A1-15D-MPU - Supply Fan (KSF-1) - Job #6544961	9,751.02	9,751.02

Exhaust System Line Item
To Furnish & Install Totaling
$107,252.40 Supersedes The
Exhaust System Line Item On
The Edward Don & Company Proposal
Dated 03/12/24.

Moss / MPG / 03/20/24

Item	Qty	Description	Net	Net Total
		AH-A1-15D-MPU Supply Unit with 15" Mixed Flow Direct Drive Fan in Size #1 Housing Supply Fan handles 1760 CFM @ 0.500" wc ESP, Fan runs at 1739 RPM. Supply Motor: 1.500 HP, 3 Phs, 208 V, 60 Hz, 4.4 FLA, ODP, Premium (E-Plus3) Eff. Down Discharge - Air Flow Right -> Left x1 - Sloped Filtered Intake for Size #1 Modular Untempered Supply Unit. 21.813" Wide x 44.375" Long x 23.375" High. Includes 2" MV EZ Kleen Metal Mesh Filters. x1 - Down Discharge Construction for Size 1 Untempered Direct Drive AHUs x1 - Miami Dade Impact and Wind Load Certification +30 / -130 PSF - Miami Dade County Product Control Approved. Florida Building Code approval. Roof Mount Exhaust Curbs up to 20" high must be 18 gauge Aluminized. x1 - Support shell for Size 1 Modular Package Unit. Includes control vestibule. Includes condenser supports. Does not include return air or inlet air damper. x1 - 3 Ton, Single Circuit Modular Packaged Cooling Option for Size 1 Modular Packaged Unit. Includes Condenser, DX Coil, Filter/Dryer Kit, Thermal Expansion Valve, R410A Refrigerant, and Refrigerant Piping. (1,100 to 1,800 cfm) When ordered with opposite airflow condensers access and coil piping will remain in standard position. Drain and sleds will move to the opposite side. Any other change will require CLI. CONDENSERS REQUIRE SEPARATE 208V, 3 PHASE POWER SUPPLY UNLESS ORDERED WITH SINGLE POINT CONNECTION. Coil = 2EZ1001N x1 - Insulated Blower Housing Sizes 1-2 Commercial Modular x1 - Control Package for Mod Package Unit Cooling Only Unit. Includes airflow proving switch, RTUlink-ACHP board and terminal blocks. x1 - Separate 120VAC Wiring Package for Make-Up Air Units. Option must be selected when mounting VFD in prewire panel or with DCV package. Provides separate 120VAC input to supply fan. This 120V signal must be run by electrician from DCV to mua switch. x1 - KSF-1 Curb CRB21X113X20INS Insulated On Fan #2 Flat Curb x1 - Full Bottom Curb Corner. Base flange corners fully welded or staked by factory. x1 - Steel Clip for Miami Dade MPU Curb Mounts x28 Fan		
		Exhaust System Line Item To Furnish & Install Totaling $107,252.40 Supersedes The Exhaust System Line Item On The Edward Don & Company Proposal Dated 03/12/24. Moss / MPG / 03/20/24		
1	ea	6544961 Electrical System #1 - Job #6544961 SC-311110MA 3 Phase w/ control for 1 Exhaust Fan, 1 Supply Fan, Exhaust on in Fire, Lights out in Fire, Relay On/Off with Supply Fan, Fan(s) On/Off Thermostatically Controlled. Room temperature sensor shipped loose for field installation. INVERTER DUTY 3 PHASE MOTOR REQUIRED FOR USE WITH VFD. Includes 1 Duct Thermostat kit. x1 - ESV112N02YXB571 - Variable Frequency Drive - 1-1/2 HP Max., 200/240 V, Single or Three Phase Input, 6.0 A Max., NEMA 1 Enclosure, with 2RJ-45 FOR MODBUS x1 - ESV152N02YXB571 - Variable Frequency Drive - 2 HP Max., 200/240 V, Single or Three Phase Input, 7.0 A Max., NEMA 1 Enclosure, with 2RJ-45 FOR MODBUS x1 - PSP thermostat kit, includes 1x duct thermostat, quick seal, and j-box for monitoring of PSP discharge temperature. x1	2,469.83	2,469.83

Item	Qty	Description	Net	Net Total
		- VERIZON CELLULAR KIT, WIRED ANTENNA AND VERIZON DATA FOR 1 YEARS. x1 - Digital Prewire Lighting Relay Kit. Includes hood lighting relay & terminal blocks. Allows for up to 1400W of lighting each. x1 - Thermistor CABLE - 18/2 AWG GREEN WHITE, plenum rated. USED for thermistor duct stat. Per Foot Price. x125 Electrical System		
	1 ea	6544961 CASLink Monitoring CASLink Monitoring x1 CASLink Monitoring	504.22	504.22
	1 ea	6544961 Factory Services Service Design Verification for CASLink. x1 Service Design Verification for Exhaust Fan x1 Service Design Verification for Hood x1 Service Design Verification for Modular Package Unit x1 Service Design Verification for Standard Electrical Control Package x1 Service Design Verification for TANK Fire Suppression x1 Service Design Verification for Untempered Supply Fan x1	551.87	551.87
	1 ea	6544961 FIRE SYSTEM FINAL HOOKUP	5,005.00	5,005.00
	1 ea	INSTALL INCLUDES THE FOLLOWING: • INSTALLATION OF HOOD(s) • INSTALLATION OF FAN(s) • FABRICATION AND INSTALL OF GREASE DUCT • FABRICATION AND INSTALL OF MUA DUCT W-R-6 INSULATION • DUCT FIRE WRAP • CRANE TO LIFT FANS TO ROOF • INSTALL OF STAINLESS-STEEL BACK SPLASH • INSTALL OF CEILING ENCLOSURES • MECHANICAL INSPECTIONS • AIR BALANCE • ENGINEERED PLANS, PERMIT & PERMIT FEE INSTALL DOES NOT INCLUDE THE FOLLOWING: • ELECTRICAL WORK • SEALED DRAWINGS • FURNISH AND INSTALL CONDENSATE DRAIN AT ROOF FOR MUA UNIT (IF APPLICABLE) • MECHANICAL PERMIT • INSTALL OF DOAS AND DIFFUSERS (IF APPLICABLE) • CUTTING OR PATCHING OF ROOF • STRUCTURAL ENGINEERING OR ALTERATIONS • FIRE RATING OF WALLS OR CEILING • PERMITS OTHER THAN FIRE AND MECHANICAL • FAN HANDRAIL (REQUIRED FOR PITCHED ROOF) • PERMANENT LADDER (REQUIRED FOR ROOF ABOVE 16FT • LAY IN CEILING GRID WORK OR HARD CEILING DRY WALL WORK • SHUT DOWN OF AC SYSTEM (WILL BE REQUIRED IF USED FOR ALL OR PART OF HOOD MAKE UP AIR) • GENERAL CONTRACTING SERVICES (MAY BE REQUIRED TO INSTALL A HOOD IN SOME COUNTIES)	65,625.00	65,625.00

Exhaust System Line Item To Furnish & Install Totaling $107,252.40 Supersedes The Exhaust System Line Item On The Edward Don & Company Proposal Dated 03/12/24.

Moss / MPG / 03/20/24

Item	Qty	Description	Net	Net Total
		BY OTHERS: • K SERIES FIRE EXTINGUISHER • HORN STROBE (BY ELECTRICIAN) • DISMANTLING OR REPLACEMENT OF EXISTING CEILING GRID OR SHEET ROCK • FRAMING OUT OF PENETRATIONS (IF REQUIRED) • REMOVAL AND REPLACEMENT OF EXISTING OBSTRUCTIONS SUCH AS A/C DUCTS, PLUMBING LINES AND ELECTRICAL CONDUITS IF REQUIRED BY OTHERS X-RAY OF SLAB IF REQUIRED		

Exhaust System Line Item To Furnish & Install Totaling $107,252.40 Supersedes The Exhaust System Line Item On The Edward Don & Company Proposal Dated 03/12/24.

Moss / MPG / 03/20/24

Extended Total:	**99,032.05**
Merchandise	$99,032.05
Freight	$1,203.84
Subtotal	100,235.89
Tax 7%	7,016.51
Total	$107,252.40

NOTE:

Prices are valid for 30 days from date of proposal.

Prices include shipping charges (freight) to Don warehouse

Consolidation (warehousing) charges (if indicated) are for receiving, cataloging and storing equipment then subsequently picking and truck loading inventory for delivery. Storage is allowed for a maximum of 60 days and there after will incur an additional charge for storage of goods.

Delivery charges if added, are based upon non-union driver during normal working hours, delivery includes off loading truck and conveying items inside building.

Installation labor charges for setup if listed are quoted based upon normal working hours using non-union labor.

Cartons and other trash will be removed from equipment and left in owner's / General Contractor's trash receptacle/dumpster.

All disconnections & connections of equipment including HVAC, electrical, plumbing are to be performed by owner's / General Contractor's trades people.

No plumbing, electrical or HVAC work has been included in this proposal.

Customer is responsible for proper access to the building and the work area including if necessary removal of doors, windows or partitions to gain access to work area.

Prices do not include costs for fees, permits, or licenses unless noted

Sales tax is included.

IMPORTANT NOTICE: Never trust wiring instructions or ACH or other banking information sent via email. Cyber criminals are hacking email accounts and sending emails with fake wiring instructions and bank information. These emails are convincing and sophisticated. Always independently confirm wiring instructions and ACH or other banking information in person or via a telephone call to a trusted and verified phone number. Never wire or transfer money without double-checking that the wiring instructions and ACH or other banking information are correct.

Acceptance: _____ Date: _____

Printed Name: _____

Exhaust System Line Item To Furnish & Install Totaling $107,252.40 Supersedes The Exhaust System Line Item On The Edward Don & Company Proposal Dated 03/12/24.

Moss / MPG / 03/20/24

Edward Don & Company

Quote

03/12/2024

To:
Moss and Associates
Michael Perez

Project:
FORT LAUDERDALE POLICE STATION 03/2024
1300 W Broward Blvd
Fort Lauderdale, FL 33312

From:
Edward Don & Co. - Miramar
Richard Snook
11500 Miramar Parkway, Suite 600
Miramar, FL 33025
M: 330-417-3287
O: 954-378-7088

Edward Don & Company is pleased to offer the following proposal.
We are bidding Section 11400-Food Service Equipment, deliver and set in place as per plans and specs of this project with no exception taken.
Mechanical, plumbing and/or electrical rough-ins and final connections are not included.
It is the Clients (CUSTOMER) responsibility to check each item on quotation to determine correct items are quoted.
Project Manager will go over each items with Client before order is place to insure accuracy.
Project Manager will meet with General contractor to review schedule
Project Manager will visit site to field measure for rough ins
All shop drawings need to be signed off on by Client/General Contractor
Nothing is included that is NOT on quotation.

Item	Qty	Description	Sell	Sell Total
1	1 ea	**EXHAUST SYSTEM** ADVANCED HOOD SYSTEMS Model No. 6544961 Hood #1 - H-1 - Job #6544961 5424AH-ND-2-PSP-F - 11ft 0" Long Exhaust-Only Wall Canopy Hood with 14" Wide Front Perforated Supply Plenum with Built-in 3" Back Standoff x1 - 430 SS Where Exposed x1 - Insulation for the PSP Housing - Front x1 - Fire Cabinet on the Left Side 12.00" Width x 54.00" Length x 24.00" Height (Additional charges may apply for cabinet if not sold with fire system) x1 - FILTER - 20" tall x 16" wide Kleen-Gard Stainless Steel Baffle Filter with Handles and Bottom Hanging Hook, UL Classified x8 - L55 Series E26 Canopy Light Fixture - High Temp Assembly, Includes Clear Thermal and Shock Resistant Globe (L55 Fixture), Bulbs By Others x4 - Extra Fixtures- L55 Series E26 Canopy Light Fixture - High Temp Assembly, Includes Clear Thermal and Shock Resistant Globe (L55 Fixture) x3	$33,407.05	$33,407.05

Exhaust System Line Item Totaling $33,407.05 Is Voided. Line Item Excludes Installation. Exhaust System Line Item To Be Re-quoted To Include Installation.

Moss / MPG / 03/20/24

Initial: _____

Item	Qty	Description	Sell	Sell Total
		- EXHAUST RISER - Factory installed 12" X 12" X 4" x1 - SUPPLY RISER - 12"x 20" Supply Riser with Volume Dampers x3 - 1/2 Pint Grease Cup New Style, Flanged Slotted x2 - FIELD WRAPPER 18.00" High Front, Left, Right x1 - Electrical Package Installation in Utility Cabinet by Plant. x1 - BACKSPLASH 122.00" High X 180.00" Long 430 SS Vertical (Includes End Caps & Divider Bars) x1 - Parts required to mount riser sensor 6 inches beside riser. Sensor installed directly in line with the center of riser and in center of the plenum space front to back. x1 - RIGHT WIDE VERTICAL END PANEL 42" Top Width, 36" Bottom Width, 80" High Insulated 430 SS x1 - LEFT WIDE VERTICAL END PANEL 42" Top Width, 36" Bottom Width, 80" High Insulated 430 SS x1		
1 ea		6544961 Fire System #1 - FS - Job #6544961 TANK-SP-2 Tank Fire Suppression 8 gallon Fire System in Utility Cabinet (includes pre-piped hood(s) with electric detection, tank(s), 24 VDC release mechanism, fire system agent, pressurized tanks, and electric pull station). (Formerly CAS-EWC). Includes piping for hood: 1. x1 - Tank-based Fire Protection System equipped with Electronic Detection utilizing CORE board as a Listed Release Mechanism. Installed in Hood Utility Cabinet with integral hood prewire panel. x1 - Pressure Switch - Monitors Tank Pressure, Supervised Signal, TANK FIRE SUPPRESSION x1 - SC-EGVA2 GAS VALVE - 2" Electrical Shutoff Valve for use with HMI reset, 110V, 60Hz (#8214280). Includes upstream strainer assembly. x1		
1 ea		6544961 Fan #1 AH-DU180HFA - Exhaust Fan (KEF-1) - Job #6544961 AH-DU180HFA High Speed Direct Drive Centrifugal Upblast Exhaust Fan with, disconnect switch and 18-3/4" wheel. Exhaust Fan handles 2200 CFM @ -1.200" wc ESP, Fan runs at 1092 RPM. Exhaust Motor: 2.000 HP, 3 Phs, 208 V, 60 Hz, 6.1 FLA, ODP, Premium (E-Plus3) Eff. x1 - Grease Cup for kitchen-duty centrifugal exhaust fans, Box Dimensions 17-1/8 L X 5-1/16 W X 3-3/4 H (20 Gauge) (Includes Down Spout) x1 - Miami Dade Impact and Wind Load Certification +150 / -150 PSF - Miami Dade County Product Control Approved. Florida Building Code approval. Roof & Wall Mount Exhaust Curbs up to 20" high must be 20 gauge Aluminized. Roof & Wall Mount Exhaust Curbs above 20" high up to 42" high must be 18 Gauge Aluminized. x1 - KEF-1 Curb CRB26.5x20E On Fan #1 Flat Curb x1 - Hinged Base for Curb. Standard Hinge attached to curb. Used on Fans with wheels 20 inches or smaller. 12 GA Galvanized. x1 - Vented Base for Curb x1		
1 ea		6544961 Fan #2 AH-A1-15D-MPU - Supply Fan (KSF-1) - Job #6544961		

Exhaust System Line Item Totaling $33,407.05 Is Voided. Line Item Excludes Installation. Exhaust System Line Item To Be Re-quoted To Include Installation.

Moss / MPG / 03/20/24

Item	Qty	Description	Sell	Sell Total
		AH-A1-15D-MPU Supply Unit with 15" Mixed Flow Direct Drive Fan in Size #1 Housing Supply Fan handles 1760 CFM @ 0.500" wc ESP, Fan runs at 1739 RPM. Supply Motor: 1.500 HP, 3 Phs, 208 V, 60 Hz, 4.4 FLA, ODP, Premium (E-Plus3) Eff. Down Discharge - Air Flow Right -> Left x1 - Sloped Filtered Intake for Size #1 Modular Untempered Supply Unit. 21.813" Wide x 44.375" Long x 23.375" High. Includes 2" MV EZ Kleen Metal Mesh Filters. x1 - Down Discharge Construction for Size 1 Untempered Direct Drive AHUs x1 - Miami Dade Impact and Wind Load Certification +30 / -130 PSF - Miami Dade County Product Control Approved. Florida Building Code approval. Roof Mount Exhaust Curbs up to 20" high must be 18 gauge Aluminized. x1 - Support shell for Size 1 Modular Package Unit. Includes control vestibule. Includes condenser supports. Does not include return air or inlet air damper. x1 - 3 Ton, Single Circuit Modular Packaged Cooling Option for Size 1 Modular Packaged Unit. Includes Condenser, DX Coil, Filter/Dryer Kit, Thermal Expansion Valve, R410A Refrigerant, and Refrigerant Piping. (1,100 to 1,800 cfm) When ordered with opposite airflow condensers access and coil piping will remain in standard position. Drain and sleds will move to the opposite side. Any other change will require CLI. CONDENSERS REQUIRE SEPARATE 208V, 3 PHASE POWER SUPPLY UNLESS ORDERED WITH SINGLE POINT CONNECTION. Coil = 2EZ1001N x1 - Insulated Blower Housing Sizes 1-2 Commercial Modular x1 - Control Package for Mod Package Unit Cooling Only Unit. Includes airflow proving switch, RTUlink-ACHP board and terminal blocks. x1 - Separate 120VAC Wiring Package for Make-Up Air Units. Option must be selected when mounting VFD in prewire panel or with DCV package. Provides separate 120VAC input to supply fan. This 120V signal must be run by electrician from DCV to mua switch. x1 - KSF-1 Curb CRB21X113X20INS Insulated On Fan #2 Flat Curb x1 - Full Bottom Curb Corner. Base flange corners fully welded or staked by factory. x1 - Steel Clip for Miami Dade MPU Curb Mounts x28		
1	ea	6544961 Electrical System #1 - Job #6544961 SC-311110MA 3 Phase w/ control for 1 Exhaust Fan, 1 Supply Fan, Exhaust on in Fire, Lights out in Fire, Relay On/Off with Supply Fan, Fan(s) On/Off Thermostatically Controlled. Room temperature sensor shipped loose for field installation. INVERTER DUTY 3 PHASE MOTOR REQUIRED FOR USE WITH VFD. Includes 1 Duct Thermostat kit. x1 - ESV112N02YXB571 - Variable Frequency Drive - 1-1/2 HP Max., 200/240 V, Single or Three Phase Input, 6.0 A Max., NEMA 1 Enclosure, with 2RJ-45 FOR MODBUS x1		

Exhaust System Line Item Totaling $33,407.05 Is Voided. Line Item Excludes Installation. Exhaust System Line Item To Be Re-quoted To Include Installation.

Moss / MPG / 03/20/24

Item	Qty	Description	Sell	Sell Total

- ESV152N02YXB571 - Variable Frequency Drive - 2 HP Max., 200/240 V, Single or Three Phase Input, 7.0 A Max., NEMA 1 Enclosure, with 2RJ-45 FOR MODBUS x1
- PSP thermostat kit, includes 1x duct thermostat, quick seal, and j-box for monitoring of PSP discharge temperature. x1
- VERIZON CELLULAR KIT, WIRED ANTENNA AND VERIZON DATA FOR 1 YEARS. x1
- Digital Prewire Lighting Relay Kit. Includes hood lighting relay & terminal blocks. Allows for up to 1400W of lighting each. x1
- Thermistor CABLE - 18/2 AWG GREEN WHITE, plenum rated. USED for thermistor duct stat. Per Foot Price. x125

Exhaust System Line Item Totaling $33,407.05 Is Voided. Line Item Excludes Installation. Exhaust System Line Item To Be Re-quoted To Include Installation.

Moss / MPG / 03/20/24

1 ea 6544961 CASLink Monitoring

1 ea 6544961 Factory Services
Service Design Verification for CASLink. x1
Service Design Verification for Exhaust Fan x1
Service Design Verification for Hood x1
Service Design Verification for Modular Package Unit x1
Service Design Verification for Standard Electrical Control Package x1
Service Design Verification for TANK Fire Suppression x1
Service Design Verification for Untempered Supply Fan x1

1 ea 6544961 Fire System Final Hookup

1 ea SERVICE DESIGN VERIFICATION DISCLAIMER

Field Service Technician is responsible for one trip to site to ensure the above equipment is operating within design specifications. All equipment must be operational. Fire suppression system should be hooked-up and armed. Additional trips will result in charges to be covered by others.

INSTALLATION BY OTHERS

By Others:
Installation, ductwork, patching, all electrical field wiring, start-up & balance, gas or electric shutdown for fire system hook-up. Condenser, filter / dryer kit, refrigerant, condenser disconnect and expansion valve, for use with DX coil module, will all be provided, installed, started and warranted by others.

Note:
Customer is responsible for additional labor charges as a result of cooking equipment layout changes after the release of the order, union labor or prevailing wage charges, or additional trips by fire system distributor caused by jobsite delays, permits, fees or test required by local authority. Submittal will specify applicable testing and approval agencies.

Item	Qty	Description	Sell	Sell Total

Hook up for the fire system must be performed in accordance with the product manual by a Factory Trained Distributor. Failure to utilize a factory trained distributor voids the product warranty. Advanced Hood Systems, LLC requirement for all field hook ups:
All fire system installation materials and methods must be in accordance with the product manual, which includes but not limited to: fire system piping, gas shut-off valves, low-voltage wiring and conduit, verification of appliance coverage, and start-up and inspection procedures.

Advanced Hood Systems, LLC product must be installed in accordance with installation instructions provided with equipment or available on our web site at www.advancedhoodsystems.com.

Ductwork must be designed and installed in accordance with AMCA and ASHRAE standards as presented in Advanced Hood Systems, LLC "Guide to Designing Air Flow Systems", available here.

Hood and Ductwork hanging brackets and angles must be supported with 1/2" - 13 TPI grade 5 (minimum) all-thread. Sandwich hanging angles and ceiling anchor points with 1/2" grade 5 (minimum) steel flat washers and 1/2" - 13 TPI grade 5 (minimum) hex nuts. A doubled hex nut configuration must be used beneath hood and duct hanging brackets and above ceiling anchors (single hex nut beneath hanging angle is only acceptable for full length and supply plenum hanging angle types). Maintain 1/4" of exposed threads beneath bottom hex nut. Torque all hex nuts to 57 ft-lbs. Reference the installation manual for additional details and limitations of all structural supports.

```
Exhaust System Line Item
Totaling $33,407.05
Is Voided. Line Item
Excludes Installation.
Exhaust System Line Item
To Be Re-quoted To Include
Installation.

Moss / MPG / 03/20/24
```

ITEM TOTAL: **$33,407.05**

2	1 ea	**RANGE, 60", 6 BURNERS, 24" GRIDDLE**	$18,490.39	$18,490.39



Vulcan Model No. 60SC-6B24GT
Endurance™ Restaurant Range, gas, 60", (6) 30,000 BTU burners with lift-off burner heads, (1) 24" thermostatic griddle, 3/4" thick, 4" wide front grease trough, (1) standard oven base (left), (1) convection oven base (right), stainless steel front, sides, backriser & high shelf, fully MIG welded frame, 6" adjustable legs, 278,000 BTU, CSA Flame, CSA Star, NSF

1 ea 1 year limited parts & labor warranty, standard
1 ea Gas type to be specified
1 ea 115v/60/1-ph, cord & plug, standard
1 ea Griddle on right side, standard
1 ea Note: The griddle being placed on the right will automatically move the 26" oven to the right
1 ea Stainless steel backriser & lift-off high shelf, standard

Item	Qty	Description	Sell	Sell Total
	2 st	CASTERS-RR4 Casters, 5" (set of 4) (2 with locks) (quantity of 2 required)		
	1 kt	T&S Brass HG-2D-48SK-PS Safe-T-Link Gas Connector Kit, 3/4" connection, 48" hose, stainless steel braiding with extruded coating, (2) SwiveLink fittings, 360° rotatable hex nut, with 90° elbow & installation kit (includes restraining cable & ball valve), Posi-Set, 215,000 BTU/ hr minium flow capacity		
			ITEM TOTAL:	**$18,490.39**
3	1 ea	**CHARBROILER, GAS, COUNTERTOP** Vulcan Model No. VTEC25 IRX™ Infrared Charbroiler, gas, countertop, 25-1/2", (2) 22,000 BTU burner, manual control, piezo ignition, crumb tray, stainless steel cooking grids, sides, control panel, top trim, removable heat shield & backsplash, 4" adjustable legs, 44,000 BTU, CSA, NSF	$7,962.00	$7,962.00
	1 ea	1 year limited parts & labor warranty, standard		
	1 ea	Gas type to be specified		
	1 ea	PLTRAIL-VTEC25 Plate Rail, 25" wide x 10" deep, stainless steel		
	1 ea	STAND/C-24 Equipment Stand, universal, 26" W x 24" H, 1/2" marine edge, undershelf, stainless steel, 5" casters		
	1 kt	T&S Brass HG-2D-48SK-PS Safe-T-Link Gas Connector Kit, 3/4" connection, 48" hose, stainless steel braiding with extruded coating, (2) SwiveLink fittings, 360° rotatable hex nut, with 90° elbow & installation kit (includes restraining cable & ball valve), Posi-Set, 215,000 BTU/ hr minium flow capacity		
			ITEM TOTAL:	**$7,962.00**
4	1 ea	**MICROWAVE OVEN** ACP Model No. RFS12TS Amana® Commercial Microwave Oven, 1.2 cu. ft., 1200 watts, medium volume, 4-stage cooking, (5) power levels, (100) memory settings, 60-minute max cooking time, LED display, touch control, ADA-compliant Braille touch pads, audible end of cycle signal, side hinged door with tempered glass, lighted interior, sealed-in ceramic shelf, stainless steel exterior & interior, 120v/60/1-ph, 16.0 amps, 20 MCA, 2000 watts (total), NEMA 5-20P, cETLus, ETL-Sanitation	$1,406.31	$1,406.31
	1 ea	3 year full warranty, standard		
	1 bx	SB10 Basket, 6" x 12" x 1", non-stick, Teflon, aids in crisping & browning food, (2 per box), suitable for all ACP, Inc. ovens		
	1 bx	TB10 Basket, non-stick, 10" x 12" x 1", mesh bottom, aids in crisping & browning food, (2 per box), suitable for all ACP Inc. ovens		
			ITEM TOTAL:	**$1,406.31**
5	1 ea	**ICE MAKER, CUBE-STYLE**	$5,586.57	$5,586.57

Item	Qty	Description	Sell	Sell Total
		Hoshizaki Model No. KM-520MAJ Ice Maker, Cube-Style, 22"W, air-cooled, self-contained condenser, production capacity up to 556 lb/24 hours at 70°/50° (480 lb AHRI certified at 90°/70°), stainless steel finish, crescent cube style, R-404A refrigerant, 115v/60/1-ph, 10.6 amps, NSF, UL, ENERGY STAR®		
	1 ea	Warranty: 3-Year parts & labor on entire machine		
	1 ea	Warranty: 5-Year parts & labor on evaporator		
	1 ea	Warranty: 5-Year parts on compressor & air-cooled condenser		
	1 ea	B-300SF Ice Bin, 22"W, top-hinged front-opening door, 300-lb ice storage capacity, for top-mounted ice maker, stainless steel exterior, 6" painted flange legs included, protected with H-GUARD Plus Antimicrobial Agent, ETL, ETL-Sanitation		
	1 ea	Warranty: 3-Year parts & labor for bin		
	1 ea	H9320-51 Water Filtration System, single configuration, 18.4" H (manifold & cartridge)		
	1 ea	Warranty: 1-Year on entire water filtration system & replaceable elements, standard		
			ITEM TOTAL:	**$5,586.57**
6	1 ea	**UNDERCOUNTER REFRIGERATOR**	$3,282.11	$3,282.11
		Hoshizaki Model No. UR27B-GLP01 Steelheart Series Undercounter Refrigerator, reach-in, one-section, 27"W, 7.21 cu. ft., self-contained rear mounted refrigeration system, (1) hinged glass door, cylinder door lock, (1) adjustable shelf, LED interior lighting, stainless steel interior, stainless steel exterior front, sides & top, (4) 2.25" stem casters (2 with brakes), R290 Hydrocarbon refrigerant, 1/6 HP, NEMA 5-15P, ETL-Sanitation, cETLus, ADA Compliant, ENERGY STAR® (Special Order)		
	1 ea	Warranty: 5-Year labor on entire machine		
	1 ea	Warranty: 6-Year parts on entire machine		
	1 ea	Warranty: 7-Year parts on compressor		
	1 ea	115v/60/1-ph, 2.9 amps, standard		
	1 pk	HS-5058 Shelf, epoxy coated wire, (1) pack, for ALL 27" & 72" Undercounters, Worktops & Prep Tables		
			ITEM TOTAL:	**$3,282.11**
8	1 ea	**REACH-IN REFRIGERATOR**	$3,884.87	$3,884.87
		Hoshizaki Model No. R1A-FS Steelheart Series Refrigerator, reach-in, one-section, 23.1 cu. ft., top mounted self-contained refrigeration system, (3) epoxy coated wire shelves, (1) full-height solid right hinged door, digital temperature display/controls, LED interior lighting, stainless steel exterior front & sides, stainless steel interior, (4) 4" heavy duty casters (2 with brakes), R290 Hydrocarbon refrigerant, 1/4 HP, NEMA 5-15P, cETLus, ETL-Sanitation, ENERGY STAR®		
	1 ea	Warranty: 5-Year labor on entire machine		

Item	Qty	Description	Sell	Sell Total
	1 ea	Warranty: 6-Year parts on entire machine		
	1 ea	Warranty: 7-Year parts on compressor		
	1 ea	115v/60/1-ph, 5 amps, standard		
	1 ea	Casters, 4" (set of 4), field installed, standard		
			ITEM TOTAL:	**$3,884.87**
9	1 ea	**REACH-IN FREEZER**	$4,653.02	$4,653.02
		 Hoshizaki Model No. F1A-FSL Steelheart Series Freezer, reach-in, one-section, 23.1 cu. ft., top mounted self-contained refrigeration system, (3) epoxy-coated wire shelves, (1) full-height solid left hinged door, digital temperature display/controls, audible & visual alarms, LED interior lighting, stainless steel exterior front & sides, stainless steel interior, (4) 4" casters (2 with brakes), R290 Hydrocarbon refrigerant, 3/4 HP, cord, NEMA 5-15P, cETLus, ETL-Sanitation		
	1 ea	Warranty: 5-Year labor on entire machine		
	1 ea	Warranty: 6-Year parts on entire machine		
	1 ea	Warranty: 7-Year parts on compressor		
	1 ea	115v/60/1-ph, 8.46 amps, standard		
	1 ea	Casters, 4" (set of 4), field installed, standard		
			ITEM TOTAL:	**$4,653.02**
10	1 ea	**DISHWASHER, UNDERCOUNTER**	$6,717.27	$6,717.27
		 CMA Dishmachines Model No. 180UC W/DISPENSERS Dishwasher, undercounter, 24"W x 25"D x 33-1/4"H, high temperature sanitizing with built-in booster heater, factory installed detergent & rinse pump, (30) racks/hour, deliming system, external Poly Pro™ scrap accumulator, 14-1/2" door opening, pumped drain, upper & lower stainless steel rotating wash & rinse arms, LED temp display, stainless steel construction, for use with 20" x 20" dishracks, includes (1) open & (1) peg rack, 1 HP wash pump, NSF, cULus		
	1 ea	208v/60/1-ph, 33.0 amps, with 5.3 kW booster heater		
	1 ea	Safe-T-Temp feature assures 180 degree sanitizing rinse once the booster thermostat has been satisfied. Cycle time will vary due to incoming water temperature.		
	1 ea	Drain Water Tempering Kit – fits 180 UC/181 GW (factory installed only)		
	1 st	Legs, 4", stainless steel (set of 4)		
			ITEM TOTAL:	**$6,717.27**
11	1 ea	**UNDERMOUNT SINK**	$1,616.08	$1,616.08
		 Advance Tabco Model No. 1416-312-BAD Smart Series™ Sink, undermount, 3-compartment, 14" wide x 16” front-to-back x 12" deep, 3-1/2" drain opening, 49-1/2” x 18-1/2" O.D. trim size, 18 gauge 304 stainless steel, (NOT FOR USE WITH STANDARD TABLES) (can be used as undermount on non-stainless tops)		

Item	Qty	Description	Sell	Sell Total
			ITEM TOTAL:	**$1,616.08**
12	1 ea	**UNDERMOUNT SINK** Advance Tabco Model No. 1620A-10 Smart Series™ Sink, undermount, 1-compartment, 16" wide x 20" front-to-back x 10" deep, 3-1/2" drain opening, 18-1/2" x 22-1/2" O.D. trim size, 18 gauge 304 stainless steel (NOT FOR USE WITH STANDARD TABLES) (can be used as undermount on non-stainless tops)	$455.69	$455.69
			ITEM TOTAL:	**$455.69**
13	1 ea	**WALK-IN COOLER** AmeriKooler Model No. CUSTOM Walk-in Cooler, 7'-10" W x 7'-10 1/8" L x 7'-7" H, With Aluminum Floor, 4” thick AK-XPS4 insulation providing R-29 for coolers and R-32 for freezers, 26 gauge stucco embossed corrosion resistant Acrylume on all interior & exterior surfaces, flush self-closing door with keyed heavy-duty deadbolt handle, digital LED thermometer with pilot light switch, 2 super cam-lift spring assisted hinges & door closer, prewired LED light fixture, Bohn remote R-448A refrigeration, 35°F, 1/2 HP, BCH0005MBACZA0000-BEL0060AS6AMAB0402 with EC motor, sized at 95°F ambient temperature, subject to terms & conditions, UL, Made in USA.	$18,861.70	$18,861.70
			ITEM TOTAL:	**$18,861.70**
Z001	1 ea	**EQUIPMENT WAREHOUSING** WAREHOUSE Model No. STORAGE Receive Equipment at Local Warehouse Inspect equipment Store equipment up to 30 day Deliver equipment to job site (1-2 trips) Help unload trucks with installers.	$1,650.00	$1,650.00
			ITEM TOTAL:	**$1,650.00**
Z100	1 ea	**INSTALL WALK IN UNITS** INSTALL Model No. EQUIPMENT INSTALL Installation of new kitchen equipment on this proposal GENERAL INSTALLATION: TO RECEIVE, UNLOAD, UNCRATE, SET IN PLACE, LEVEL, ANCHOR AND/OR SILICONE TO WALL FOR FINAL CONNECTIONS BY OTHERS. ALL HOLES WILL BE CUT OUT AS NEEDED IF ALL HOLES ARE SPECIFIED AND/OR MARKED BY OTHERS, TRADES ETC. (I.E. SIZE AND LOCATION). *NOT TO INCLUDE* WALK-IN COOLERS, VENTILATOR HOODS, RACK OVENS, FLIGHT TYPE DISHMACHINES, ANY INTERCONNECTIONS OF EQUIPMENT OR COUNTERS WHERE ALL WIRES AND/OR FITTINGS HAVE NOT ALREADY BEEN SUPPLIED & PRE-ASSEMBLED. ATTACHING OF ANY AND ALL PLUMBING FIXTURES TO SINKS, COUNTERS, WALLS ETC. PROTECTION AND/OR REPAIRS TO ANY MATERIALS, COUNTERS, EQUIPMENT, ETC. WITH DAMAGE CAUSED BY	$7,800.00	$7,800.00

Item	Qty	Description	Sell	Sell Total
		OTHERS. *TRASH DUMPSITE (WITHIN 100 FEET) SUPPLIED BY OTHERS. *ALL WORK WILL BE COMPLETED IN A TIMELY MANNER *(NOTE: PERMITS SUPPLIED BY OTHERS) ONE PUNCH LIST IN WRITING WILL BE PERFORMED AT COMPLETION OF THIS PROJECT AND IT'S SCOPE OF WORK. *ALL ADDITIONAL COSTS SUCH AS NEEDED TRIM, INSTALLATION OF NEEDED TRIM, MATERIALS ETC. WILL REQUIRE AN ADDITIONAL PURCHASE ODER BEFORE WORK IS DONE.		
			ITEM TOTAL:	**$7,800.00**
Z200	1 ea	**INSTALL WALK IN UNITS** INSTALL Model No. WALK-IN INSTALL Receive Walk In units at job site. Unload truck Uncrate Erect walk in units per plan Mount Refrigeration. install stands Run Copper Drain lines RUN refrigeration lines. FINAL ELECTRICAL BY OTHERS. Start up Walk In and balance Place Packaging in Customer supplied dumpster PERMITS EXTRA	$9,600.00	$9,600.00
			ITEM TOTAL:	**$9,600.00**
Z300	1 ea	**INSTALL HOODS** BY OTHERS Model No. INSTALL HOODS INSTALLATION BY OTHERS -BY MECHANICAL By Others: Installation, ductwork, patching, all electrical field wiring, start-up & balance, gas or electric shutdown for fire system hook-up. Note: Customer is responsible for additional labor charges as a result of cooking equipment layout changes after the release of the order, union labor or prevailing wage charges, or additional trips by fire system distributor caused by jobsite delays, permits, fees or test required by local authority. Submittal will specify applicable testing and approval agencies. CaptiveAire Systems requirement for all field hook ups: All fire system detection conduit must be half inch EMT. All conduit fittings must be compression type and fully tightened. All conduit ends must be reamed and deburred and blown clear of debris prior to assembly. All		<By Other>

Item	Qty	Description	Sell	Sell Total

conduit must be fully and robustly supported to avoid accidental fire system discharge.

CaptiveAire Systems product must be installed in accordance with installation instructions provided with equipment or available on our web site at www.captiveaire.com.

Ductwork must be designed and installed in accordance with AMCA and ASHRAE standards as presented in CaptiveAire Systems "Guide to Designing Air Flow Systems", available at: http://www.captiveaire.com/MANUALS/AIRSYSTEMDESIGN/DESIGNAIRSYSTEMS.HTM

Merchandise	$125,373.06
Freight	$3,037.50
Tax 7%	$8,988.74
Total	$137,399.30

Prices Good Until: 04/15/2024

NOTE:

Prices are valid for 30 days from date of proposal.

Prices include shipping charges (freight) to Don warehouse

Consolidation (warehousing) charges (if indicated) are for receiving, cataloging and storing equipment then subsequently picking and truck loading inventory for delivery. Storage is allowed for a maximum of 60 days and there after will incur an additional charge for storage of goods.

Delivery charges if added, are based upon non-union driver during normal working hours, delivery includes off loading truck and conveying items inside building.

Installation labor charges for setup if listed are quoted based upon normal working hours using non-union labor.

Cartons and other trash will be removed from equipment and left in owner's / General Contractor's trash receptacle/dumpster.

All disconnections & connections of equipment including HVAC, electrical, plumbing are to be performed by owner's / General Contractor's trades people.

No plumbing, electrical or HVAC work has been included in this proposal.

Customer is responsible for proper access to the building and the work area including if necessary removal of doors, windows or partitions to gain access to work area.

Prices do not include costs for fees, permits, or licenses unless noted

Sales tax is included.

IMPORTANT NOTICE: Never trust wiring instructions or ACH or other banking information sent via email. Cyber criminals are hacking email accounts and sending emails with fake wiring instructions and bank information. These emails are convincing and sophisticated. Always independently confirm wiring instructions and ACH or other banking information in person or via a telephone call to a trusted and verified phone number. Never wire or transfer money without double-checking that the wiring instructions and ACH or other banking information are correct.

Acceptance: _____ Date: _____

Printed Name: _____

Project Grand Total: $137,399.30

Item # _____ C.S.I. Section 11420

RESTAURANT RANGES

ENDURANCE GAS RESTAURANT RANGE
6 OPEN BURNERS / 24" GRIDDLE
60" WIDE GAS RANGE



Model 60SS-6B24GN
(shown with optional casters)

- ☐ **60SS-6B24GN** 2 Standard Ovens / Natural Gas
- ☐ **60SS-6B24GP** 2 Standard Ovens / Propane
- ☐ **60SC-6B24GN** 1 Standard Oven / 1 Convection Oven Natural Gas
- ☐ **60SC-6B24GP** 1 Standard Oven / 1 Convection Oven Propane

STANDARD FEATURES

- Fully MIG welded frame
- Stainless steel front, sides, backriser, lift-off high shelf
- 6" stainless steel adjustable legs
- Six open top burners, each burner is 30,000 BTU/hr. with lift-off burner heads
- Shrouded flash tube pilot system (one pilot per two burners)
- Heavy duty cast grates, easy lift-off 12" x 12½" in front and 12" x 14½" in the rear
- 24" manual griddle, ⅞" thick, 4" wide front grease trough
- Extra deep pull out crumb tray with welded corners
- 23,000 BTU/hr. baker's depth oven cavity, full size sheet pans (18" x 26") fit front to back
- Oven thermostat adjusts from 250°F to 500°F
- Two oven racks and four rack positions for each oven
- Right oven: 35,000 BTU/hr. convection oven in place of standard oven 24"d x 26⅜"w x 13⅞"h (115v - 1 phase blower motor, 4 amp, 6' cord and plug, includes three oven racks. Full size sheet pans only fit side-to-side in convection oven. Convection oven motor requires field attachment.
- 1" rear gas connection and pressure regulator
- One year limited parts and labor warranty

SPECIFICATIONS

60" wide gas restaurant range, Vulcan Model No. 60SS-6B24GN. Fully MIG welded aluminized steel frame for added durability. Stainless steel front, sides, backriser, highshelf and 6" adjustable legs. Extra deep crumb tray with welded corners. Six 30,000 BTU/hr. open top burners with lift-off burner heads. Energy saving flashtube open burner ignition system (one pilot for every two burners) shrouded for reliability. Heavy duty cast grates, easy lift-off 12" x 12½" in the front and 12" x 14½" in the back to better accommodate stock pots or large pans. Grates have a built in aeration bowl for greater efficiency. 24" manual griddle, ⅞" thick, 4" wide front grease trough. Burner knobs are cool to the touch, high temperature material. Two ovens: left oven is 23,000 BTU/hr. bakers depth oven, measures 26¼"d x 20¼"w x 14"h. Right oven is 35,000 BTU/hr. bakers depth oven, measures 27"d x 26⅜"w x 14"h. Oven thermostat adjusts from 250°F to 500°F with a low setting. Each oven is supplied with two racks, two rack guide sets, and four rack positions. Oven doors are heavy duty with an integrated door hinge/spring mechanism requiring no adjustment. 1" rear gas connections with rear manifold and pressure regulator. Total input 278,000 BTU/hr.

Exterior Dimensions:
34"d x 60"w x 58"h on 6" adjustable legs

ACCESSORIES (Packaged & Sold Separately)

- ☐ Extra oven rack with rack guides
- ☐ Casters (set of eight)
- ☐ Leveling casters (set of eight)
- ☐ Flanged feet (set of eight)
- ☐ 10" stainless steel stub back
- ☐ Reinforced high shelf for mounting salamander broiler

OPTIONS (Factory Installed)

- ☐ Thermostatically controlled griddle (snap action)

a division of ITW Food Equipment Group LLC
P.O. Box 696 ■ Louisville, KY 40201 ■ Toll-free: 1-800-814-2028 ■ Local: 502-778-2791 ■ Quote & Order Fax: 1-800-444-0602

RESTAURANT RANGES

ENDURANCE GAS RESTAURANT RANGE
6 OPEN BURNERS / 24" GRIDDLE
60" WIDE GAS RANGE

INSTALLATION INSTRUCTIONS

1. A pressure regulator sized for this unit is included. Natural gas 5.0" W.C., propane gas 10.0" W.C.
2. Gas line connecting to range must be 1" or larger. If flexible connectors are used, the inside diameter must be 1" or larger.
3. An adequate ventilation system is required for commercial cooking equipment. Information may be obtained by writing to the National Fire Protection Association, 1 Batterymarch Park, Quincy, MA 02269, www.NFPA.org. When writing, refer to NFPA No. 96.
4. These units are manufactured for installation in accordance with ANSZ223.1A (latest edition), National Fuel Gas Code. Copies may be obtained from The American Gas Association, 400 N Capitol St. NW, Washington, DC 20001, www.AGA.org.
5. **Clearances**

	Rear	Sides
Combustible	6"	10"
Standard Oven Non-combustible	0"	0"
Convection Oven Non-combustible	Min. 4"	0"

6. For proper combustion, install equipment on adjustable legs or casters provided with unit.

NOTE: In line with its policy to continually improve its product, Vulcan reserves the right to change materials and specifications without notice.

Specify type of gas when ordering.
Specify altitude when above 2,000 feet.

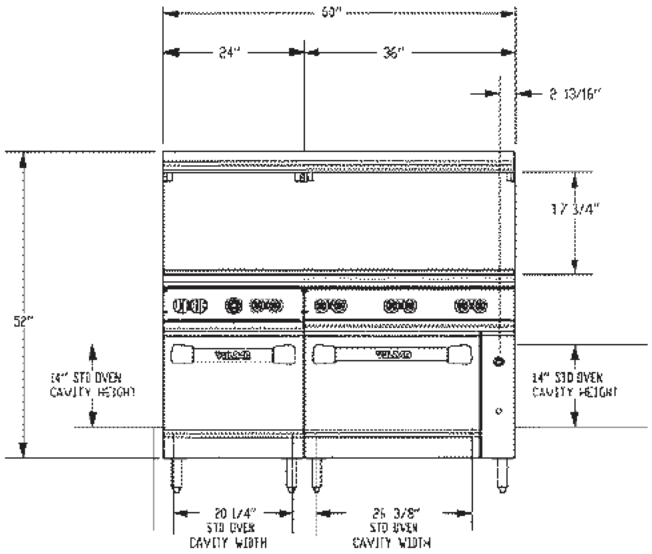

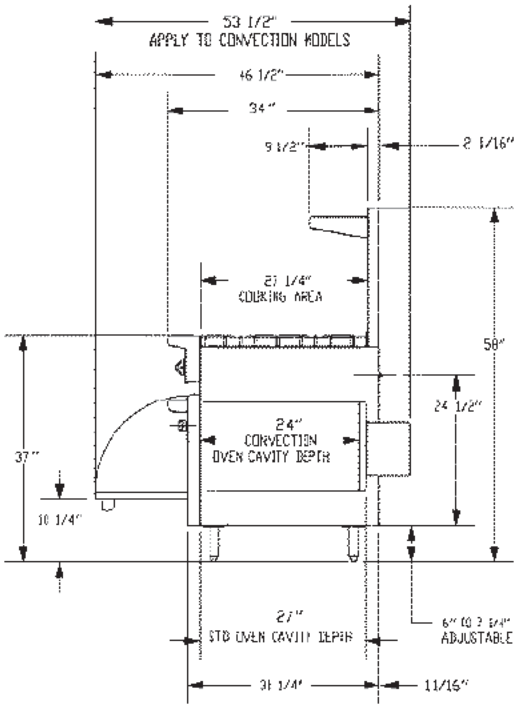

TOP CONFIGURATION	MODEL NUMBER	DESCRIPTION	TOTAL INPUT BTU / HR	SHIPPING WEIGHT LBS / KG
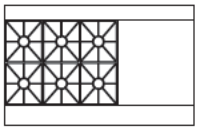	**60SS-6B24GN**	2 Standard Ovens / 6 Burners / 24" Griddle / Natural Gas	278,000	890 / 404
	60SS-6B24GP	2 Standard Ovens / 6 Burners / 24" Griddle / Propane	278,000	890 / 404
	60SC-6B24GP	1 Standard Oven / 1 Convection Oven / 6 Burners / 24" Griddle Natural Gas	278,000	950 / 431
	60SC-6B24GP	1 Standard Oven / 1 Convection Oven / 6 Burners / 24" Griddle Propane	278,000	950 / 431

This appliance is manufactured for commercial use only and is not intended for home use.

VULCAN
a division of ITW Food Equipment Group LLC
P.O. Box 696 ■ Louisville, KY 40201 ■ Toll-free: 1-800-814-2028 ■ Local: 502-778-2791 ■ Quote & Order Fax: 1-800-444-0602

NOTE: In line with its policy to continually improve its products, Vulcan reserves the right to change materials and specifications without notice.

T&S BRASS AND BRONZE WORKS, INC.
2 SADDLEBACK COVE / P.O. BOX 1088 / TRAVELERS REST, SC 29690
PHONE 800-476-4103 FAX 864- 834-3518

REG.#A2601
ISO #9002

Model No.: HG-2D-48SK-PS
Item No.:

Job Name:

Architect/Engineer Approval:

SAFE-T-LINK
A.G.A. DESIGN CERTIFIED GAS APPLIANCE CONNECTORS

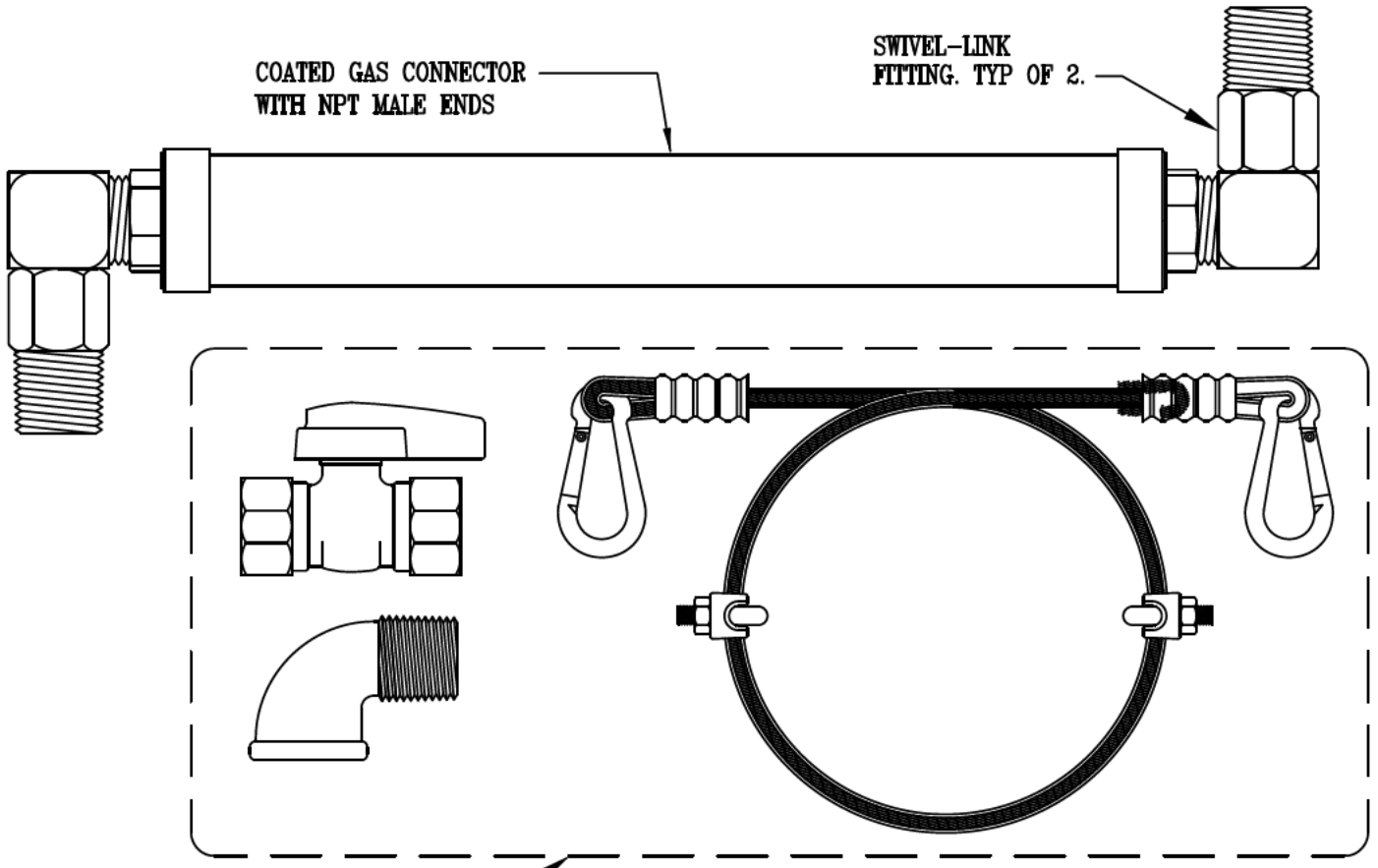

Product Description:
SAFE-T-LINK GAS APPLIANCE CONNECTOR: COATED HOSE FURNISHED w/ SWIVEL LINKS, INSTALLATION KIT & POSI-SET APPLIANCE LOCATING SYSTEM

Drawn:	Checked	Scale:
DMH	KJG	NTS
Approved		Date:
JHB		11/05/10

CAM #24-0670
Exhibit 1
Page 151 of 288

Item # _____ C.S.I. Section 11420

GRIDDLES & BROILERS

VTEC SERIES
COUNTER MODEL GAS INFRARED CHARBROILER



Model VTEC36

- ☐ **VTEC14** 14½" wide
- ☐ **VTEC25** 25½" wide
- ☐ **VTEC36** 36½" wide
- ☐ **VTEC48** 47½" wide
- ☐ **VTEC60** 58½" wide

STANDARD FEATURES

- Stainless steel sides, control panel, top trim and backsplash
- Full width, stainless steel front crumb tray
- Heavy duty steel infrared emitter panels
- 11" x 25" stainless steel cooking grids (providing 275 square inches of cooking area in each burner zone)
- Energy efficient 22,000 BTU/hr., patented infrared burner system in each cooking zone
- Direct ignition piezo spark igniters
- One high range heat control valve for each burner
- Chrome burner control knobs
- Removable, stainless steel heat shield and splash guard
- 4" adjustable legs
- ¾" NPT rear gas connection and gas pressure regulator provided
- 1 replacement emitter panel standard with VTEC14, 2 replacement emitter panels standard for VTEC25 and larger
- One year limited parts and labor warranty

SPECIFICATIONS

High efficiency gas infrared charbroiler, Vulcan Model No. _____. Stainless steel front, sides and top trim. Full width, stainless steel front crumb tray. Heavy duty, steel infrared emitter panels. 11" x 25" stainless steel cooking grids. One 22,000 BTU/hr. patented infrared burner system for each cooking grid. Direct ignition piezo spark igniters. One high range heat control valve for each burner. Chrome burner knobs. 4" adjustable legs. ¾" NPT rear gas connection and gas pressure regulator.

Exterior Dimensions:
_____" wide x 35⅛" deep x 12½" working height.

CSA design certified. NSF listed.

SPECIFY TYPE OF GAS WHEN ORDERING.
SPECIFY ALTITUDE WHEN ABOVE 2,999 FT.

ACCESSORIES

Ordered separately and field installed

- ☐ Stainless steel "Fish Grates" with smaller, ¼" rib spacing.
- ☐ Stainless steel stand with undershelf and casters.

a division of ITW Food Equipment Group LLC
P.O. Box 696 ■ Louisville, KY 40201 ■ Toll-free: 1-800-814-2028 ■ Local: 502-778-2791 ■ Quote & Order Fax: 1-800-444-0602

GRIDDLES & BROILERS

VTEC SERIES
COUNTER MODEL GAS INFRARED CHARBROILER

INSTALLATION REQUIREMENTS:

1. A gas pressure regulator supplied with the unit must be installed:
   Natural Gas 4.0" (102 mm) W.C.
   Propane Gas 10.0" (254 mm) W.C.
2. An adequate ventilation system is required for commercial cooking equipment. Information may be obtained by writing to the National Fire Protection Association, Batterymarch Park, Quincy, MA 02269. When writing refer to NFPA No. 96.
3. These units are manufactured for installation in accordance with National Fuel Gas Code, ANSI-Z223.1/NFPA #54 (latest edition). Copies may be obtained from The American Gas Association, Accredited Standards Committee Z223 @ 400 N. Capital St. NW, Washington, DC 20001, or the Secretary Standards Council, NFPA, 1 Batterymarch Park, Quincy, MA 02169-7471.
   NOTE: In The Commonwealth of Massachusetts
   All gas appliances vented through a ventilation hood or exhaust system equipped with a damper or with a power means of exhaust shall comply with 248 CMR.
4. CLEARANCES

	Non-Combustible
Rear	0"
Sides	0"

5. This appliance is manufactured for commercial installation only and is not intended for home use.

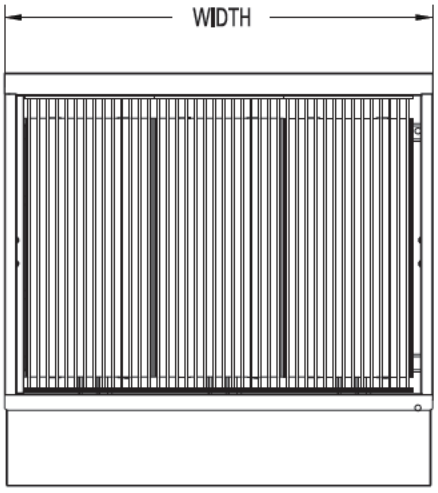

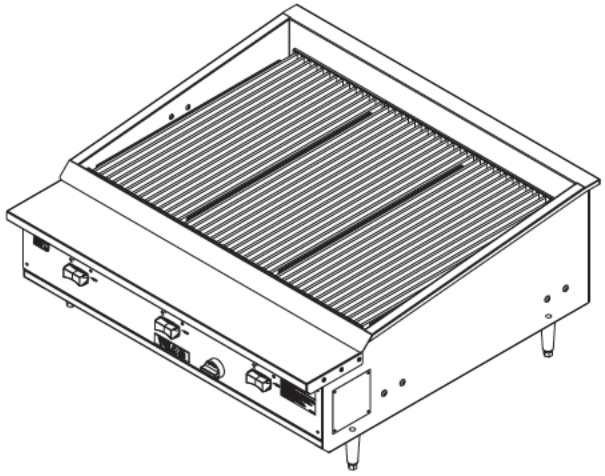

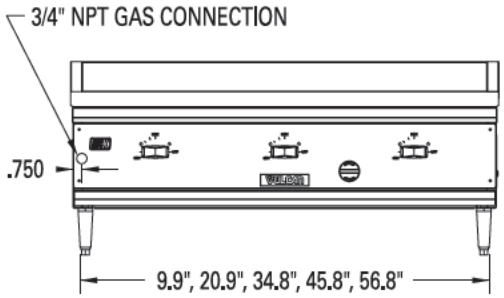

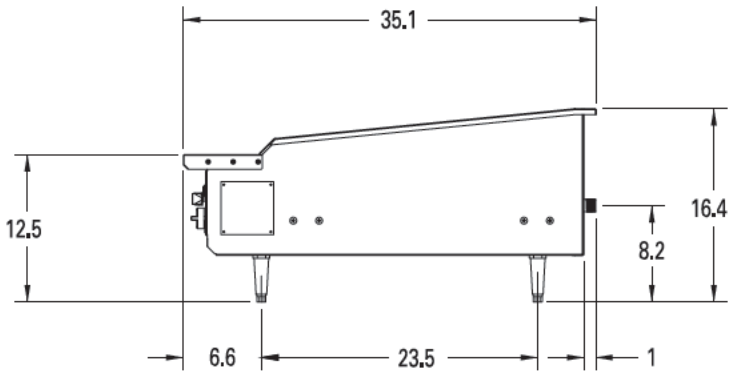

MODEL	WIDTH	DEPTH	OVERALL HEIGHT	WORKING HEIGHT*	BROILING AREA	# BURNERS	TOTAL BTU/HR	APPROX SHIP WT (LB/KG)
VTEC14	14.4"	35.1"	16.4"	12.5"	11" x 25.25"	1	22,000	97/44
VTEC25	25.4"				22" x 25.25"	2	44,000	151/68
VTEC36	36.4"				33" x 25.25"	3	66,000	210/95
VTEC48	47.4"				44" x 25.25"	4	88,000	264/120
VTEC60	58.4"				55" x 25.25"	5	110,000	309/140

VULCAN
a division of ITW Food Equipment Group LLC
P.O. Box 696 ■ Louisville, KY 40201 ■ Toll-free: 1-800-814-2028 ■ Local: 502-778-2791 ■ Quote & Order Fax: 1-800-444-0602

NOTE: In line with its policy to continually improve its products, Vulcan reserves the right to change materials and specifications without notice.

Item # _____ C.S.I. Section 11420

GRIDDLES & BROILERS

VTEC SERIES
COUNTER MODEL GAS INFRARED CHARBROILER

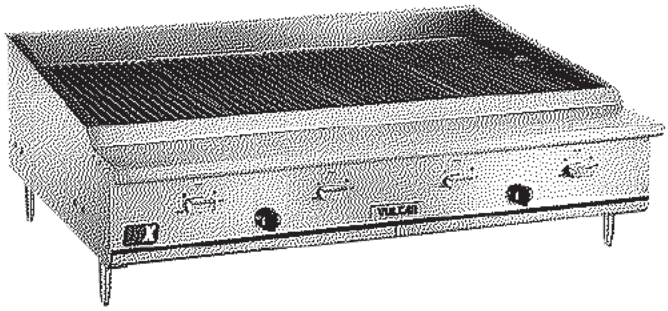

Model VTEC48

- ☐ **VTEC14** 14½" wide
- ☐ **VTEC25** 25½" wide
- ☐ **VTEC36** 36½" wide
- ☐ **VTEC48** 47½" wide
- ☐ **VTEC60** 58½" wide

STANDARD FEATURES

- Stainless steel sides, control panel, top trim and backsplash
- Full width, stainless steel front crumb tray
- Heavy duty steel infrared emitter panels
- 11" x 25" stainless steel cooking grids (providing 275 square inches of cooking area in each burner zone)
- Energy efficient 22,000 BTU/hr., patented infrared burner system in each cooking zone
- Direct ignition piezo spark igniters
- One high range heat control valve for each burner
- Chrome burner control knobs
- Removable, stainless steel heat shield and splash guard
- 4" adjustable legs
- ¾" NPT rear gas connection and gas pressure regulator provided
- One year limited parts and labor warranty

SPECIFICATIONS

High efficiency gas infrared charbroiler, Vulcan Model No. _____. Stainless steel front, sides and top trim. Full width, stainless steel front crumb tray. Heavy duty, steel infrared emitter panels. 11" x 25" stainless steel cooking grids. One 22,000 BTU/hr. patented infrared burner system for each cooking grid. Direct ignition piezo spark igniters. One high range heat control valve for each burner. Chrome burner knobs. 4" adjustable legs. ¾" NPT rear gas connection and gas pressure regulator.

Exterior Dimensions:
_____" wide x 35⅛" deep x 12½" working height.

CSA design certified. NSF listed.

SPECIFY TYPE OF GAS WHEN ORDERING.
SPECIFY ALTITUDE WHEN ABOVE 2,999 FT.

ACCESSORIES

Ordered separately and field installed

- ☐ Stainless steel "Fish Grates" with smaller, ¼" rib spacing.
- ☐ Stainless steel stand with undershelf and casters.

VULCAN
a division of ITW Food Equipment Group LLC
P.O. Box 696 ■ Louisville, KY 40201 ■ Toll-free: 1-800-814-2028 ■ Local: 502-778-2791 ■ Quote & Order Fax: 1-800-444-0602

GRIDDLES & BROILERS

VTEC SERIES
COUNTER MODEL GAS INFRARED CHARBROILER

INSTALLATION REQUIREMENTS:

1. A gas pressure regulator supplied with the unit must be installed:
   Natural Gas 4.0" (102 mm) W.C.
   Propane Gas 10.0" (254 mm) W.C.
2. An adequate ventilation system is required for commercial cooking equipment. Information may be obtained by writing to the National Fire Protection Association, Batterymarch Park, Quincy, MA 02269. When writing refer to NFPA No. 96.
3. These units are manufactured for installation in accordance with National Fuel Gas Code, ANSI-Z223.1/NFPA #54 (latest edition). Copies may be obtained from The American Gas Association, Accredited Standards Committee Z223 @ 400 N. Capital St. NW, Washington, DC 20001, or the Secretary Standards Council, NFPA, 1 Batterymarch Park, Quincy, MA 02169-7471.
   NOTE: In The Commonwealth of Massachusetts
   All gas appliances vented through a ventilation hood or exhaust system equipped with a damper or with a power means of exhaust shall comply with 248 CMR.
4. CLEARANCES

	Non-Combustible
Rear	0"
Sides	0"

5. This appliance is manufactured for commercial installation only and is not intended for home use.

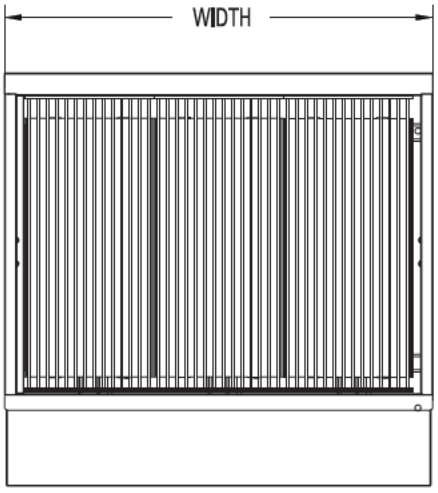

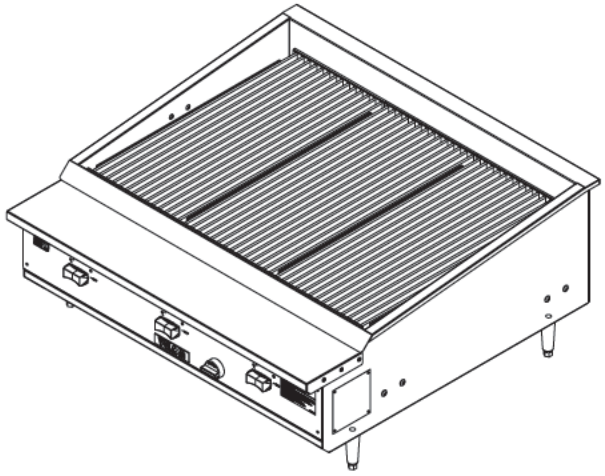

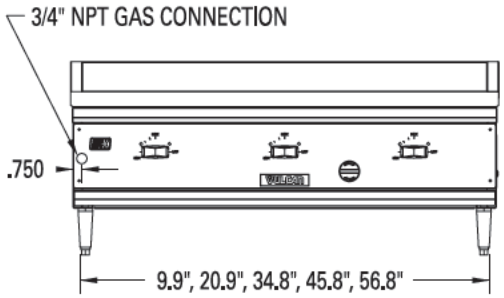

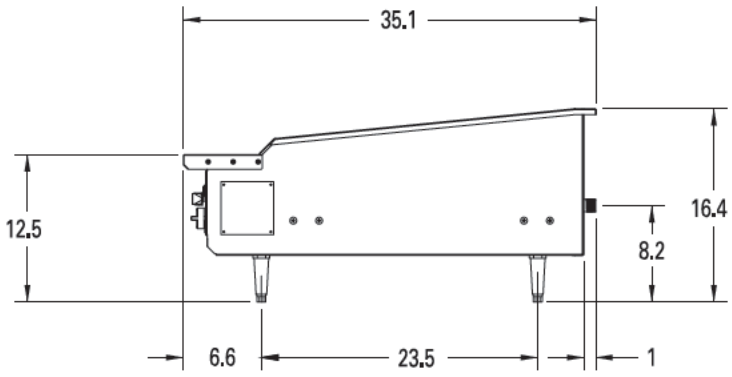

MODEL	WIDTH	DEPTH	OVERALL HEIGHT	WORKING HEIGHT*	BROILING AREA	# BURNERS	TOTAL BTU/HR	APPROX SHIP WT (LB/KG)
VTEC14	14.4"	35.1"	16.4"	12.5"	11" x 25.25"	1	22,000	97/44
VTEC25	25.4"				22" x 25.25"	2	44,000	151/68
VTEC36	36.4"				33" x 25.25"	3	66,000	210/95
VTEC48	47.4"				44" x 25.25"	4	88,000	264/120
VTEC60	58.4"				55" x 25.25"	5	110,000	309/140

VULCAN
a division of ITW Food Equipment Group LLC
P.O. Box 696 ■ Louisville, KY 40201 ■ Toll-free: 1-800-814-2028 ■ Local: 502-778-2791 ■ Quote & Order Fax: 1-800-444-0602

NOTE: In line with its policy to continually improve its products, Vulcan reserves the right to change materials and specifications without notice.

Item # _____ C.S.I. Section 11420

GRIDDLES & BROILERS

COUNTER MODEL
STAINLESS STEEL STANDS

☐ STAND/C
☐ STAND/C-VACB

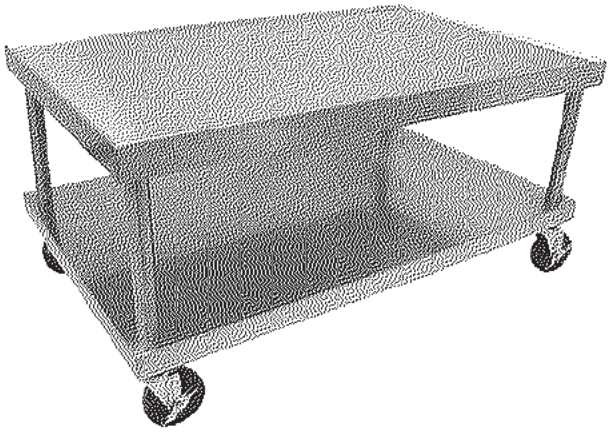

Model STAND/C-48

STANDARD FEATURES

- Stainless steel construction
- Welded and smooth blended edges
- STAND/C models have ½" wide marine edges
- All models have 5" casters with 2 or 3 locking brakes
- All models have an undershelf
- One year limited parts and labor warranty

OPTIONAL FEATURES (Factory Installed)

☐ Product variations, including flanged feet, available. See your sales representative for product variance requests.

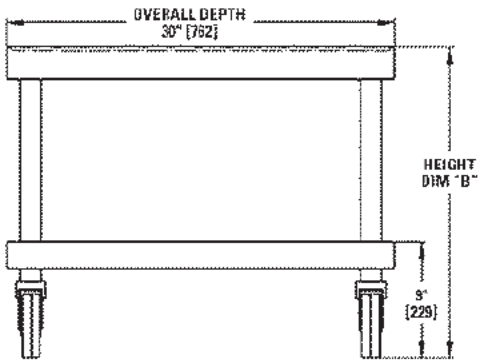

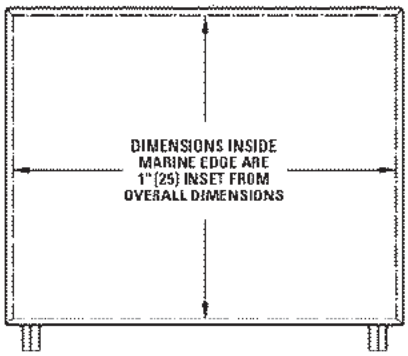

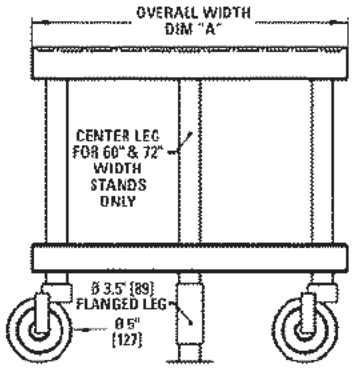

PRODUCT FAMILY	ACCESSORY CODE CASTERS	DIM "A"	DIM "B"
VCCG 900RX MSA RRE HEG VTEC VACB VCCB VHP	STAND/C-24	26" [660]	
	STAND/C-36	37" [940]	
	STAND/C-48	49" [1245]	
	STAND/C-60	61" [1550]	
	STAND/C-72	73" [1854]	
CTSMOKER-VCCB SMOKER-VACB	STAND/C-VACB25	26" [660]	17½" [445]
	STAND/C-VACB36	37" [940]	
	STAND/C-VACB47	49" [1245]	
	STAND/C-VACB60	61" [1550]	

VULCAN
a division of ITW Food Equipment Group LLC
P.O. Box 696 ■ Louisville, KY 40201 ■ Toll-free: 1-800-814-2028 ■ Local: 502-778-2791 ■ Quote & Order Fax: 1-800-444-0602

NOTE: In line with its policy to continually improve its products, Vulcan reserves the right to change materials and specifications without notice.

T&S BRASS AND BRONZE WORKS, INC.
2 SADDLEBACK COVE / P.O. BOX 1088 / TRAVELERS REST, SC 29690
PHONE 800-476-4103 FAX 864- 834-3518

REG.#A2601
ISO #9002

Model No.: HG-2D-48SK-PS
Item No.:

Job Name:

Architect/Engineer Approval:

SAFE-T-LINK
A.G.A. DESIGN CERTIFIED GAS APPLIANCE CONNECTORS

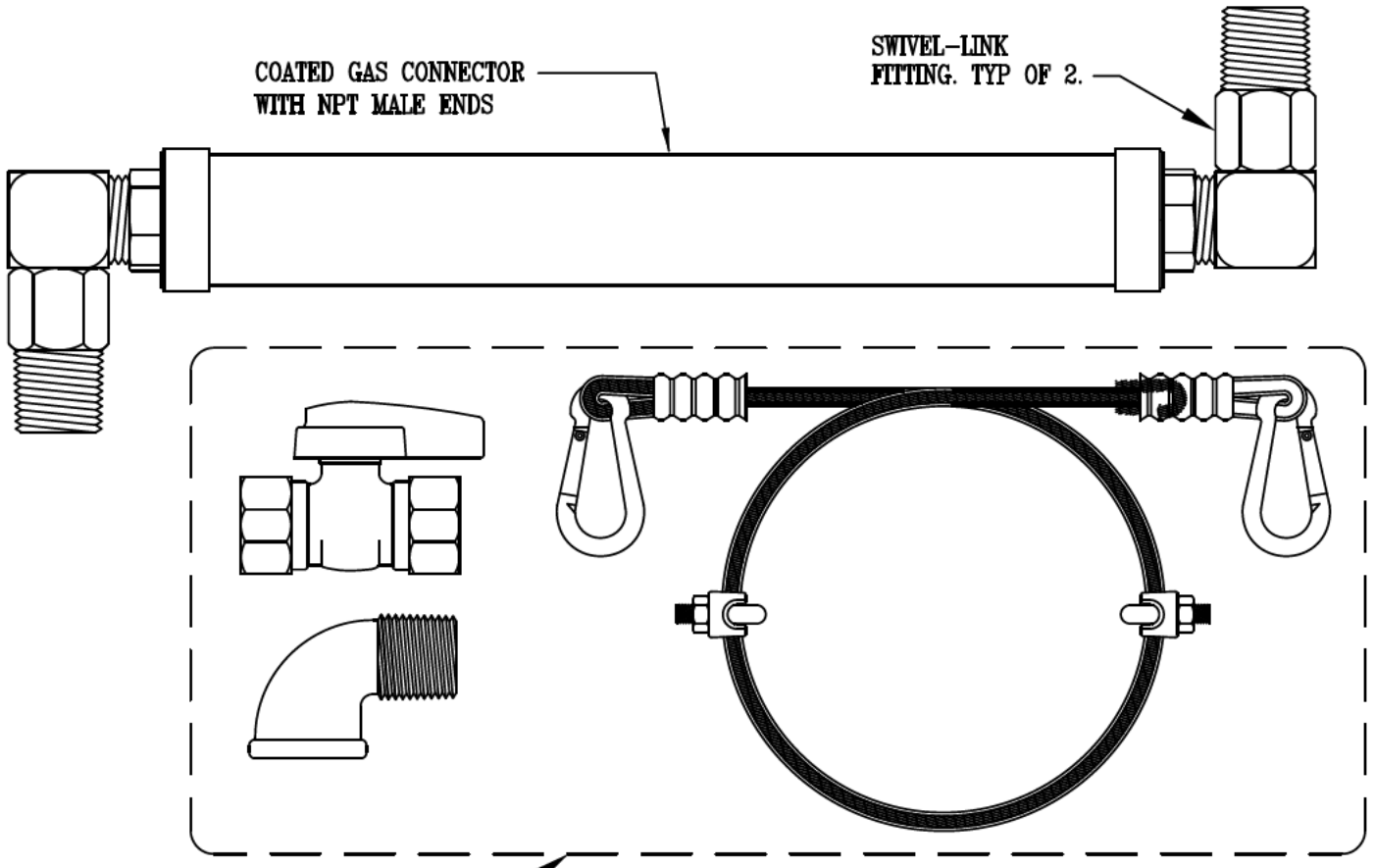

Product Description:
SAFE-T-LINK GAS APPLIANCE CONNECTOR: COATED HOSE FURNISHED w/ SWIVEL LINKS, INSTALLATION KIT & POSI-SET APPLIANCE LOCATING SYSTEM

Drawn:	Checked	Scale:
DMH	KJG	NTS
Approved		Date:
JHB		11/05/10

CAM #24-0670
Exhibit 1
Page 157 of 288

Amana® Commercial

Project #: _____

Item #: _____



Medium & Heavy Volume

Amana® Commercial **RFS** Series

Power Output

- 1200-2100 Watts of power
- Five power levels for consistent, delicious results for frozen, refrigerated and fresh foods - from the freezer to table in minutes.

Easy to Use

- Up to 100 programmable menu items simplifies cooking and ensures consistent results.
- Four stage cooking option with one-touch programming. Reduces prep time, labor and food waste while providing consistent results.
- Multiple quantity pad calculates the proper cooking times for multiple portions.
- User friendly touch controls are easy to use.
- Time entry option for added flexibility.
- Digital display with countdown timer for simple operation and "at-a-glance" monitoring.
- Braille touch pads.
- See-through door and lighted interior for monitoring without opening the door.
- 1.2 cubic ft. (34 Liter) capacity accommodates a 14" (356 mm) platter, prepackaged foods and single servings.
- Stackable to save valuable counter space.

Easy to Maintain

- Stainless steel exterior and interior for easy cleaning and a professional look.
- Removable air filter protects oven components.
- Constructed to withstand the foodservice environment.
- ETL Listed.

AIA File #:

Specification #:

Optional Accessories

- Cavity shelf (SE10)
- Stainless cart/equipment stands: (CA24, CA30)
- Non-stick baskets (NB10, TB10/S, SB10/S, MB10/S)
- Oven Cleaner and Shield Protectant (CL10*, SH10*)

Service

All products are backed by the ACP, Inc.
24/7 ComServ Support Center

ComServ Commercial Service
866-811-8559

Warranty

Warranty Certificate for this product can be found on the ACP, Inc. website at www.acpsolutions.com/warranty

Safety and Sanitation

This ACP, Inc. product meets and exceeds safety and sanitation standards set for commercial microwave ovens by UL, ETL, NSF, CSA, and FDA

Restaurant Line | Medium & Heavy Volume
This category of microwave oven is ideal for…

Applications

- Fast casual restaurants
- Prep stations
- Pubs
- Family restaurants

Through put potential by oven wattage (items per hour)

Food item	1200W	1800W	2100W
Mac 'n cheese (pre-cooked) (2lbs (907g))	15	21	25
Steamed Shrimp (1lb (454g))	21	29*	34*
Baked potato (10oz (283g))	18	21	26
Fresh Asparagus (8oz (227g))	21	28*	33*
Chicken Noodle Soup (16oz (480ml))	19	28	33
Cinnamon Roll (pre-baked) (6oz (171g))	120	144	164

**For best steaming results, use 1800-2100W*

All ACP, Inc. commercial ovens are supported by our Culinary Center. Do not hesitate to contact us for any questions regarding food preparation, menu development and cooking times: testkitchen@acpsolutions.com

Culinary Center ACP

**Only shipped in U.S.A.*

© 2020 ACP, Inc.
Cedar Rapids, Iowa 52404

225 49th Ave. Dr. SW Cedar Rapids, IA 52404 U.S.A. | 800-233-2366 | 319-368-8120 | Fax: 319-368-8198 | www.acpsolutions.com

Amana is a trademark of Maytag Properties, LLC or its related companies. Manufactured under license by ACP, Inc. Limited warranty provided by manufacturer. © 2020 ACP, Inc.

Amana® Commercial Microwave **RFS** Series | Medium & Heavy Volume

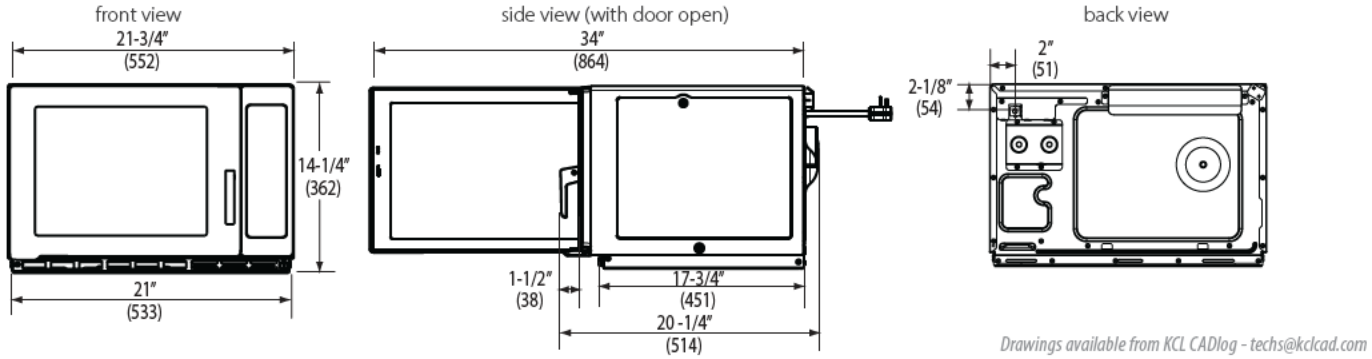

Drawings available from KCL CADlog - techs@kclcad.com

Dimensions

Exterior	H 14 ⅜" (365)	W 21 ¾" (551)	D† 21" (533)
Cavity	H 8 ⅞" (226)	W 14 ⅛" (359)	D 16 ¼" (413)
Usable Cavity Space	1.2 cubic ft. (34 liter)		
Door Depth	34" (864), 90°+ door open		
Installation Clearance	Top: 2" (51)	Sides: 1" (25)	Back: None
Shipping Carton	H 18 ½" (467)	W 26 ⅛" (663)	D 22 ⅞" (581)

Weight

Model Type	Product Weight	Ship weight (approx.)	UPS Shippable
1200W	66 lbs (30 kg)	71 lbs (32 kg)	Yes
1800W or 2100W	70 lbs (32 kg)	77 lbs (35 kg)	Yes

Measurements are US Standard. Measurements in ( ) are in millimeters
** IEC 60705 Tested*
† Includes handle

Features

Configuration	Countertop
Stackable	Yes
Display	LED
USB Port	No
Control System	Touchpad
Programmable Control	Yes, 10 pads
Braille	Yes
Settings Programmable	100
Max. Cooking Time	60:00
Microwave Distribution	Rotating antennas, top & bottom
Power Levels	5
Defrost	Yes
Time Entry Option	Yes
Multiple Portion Setting	Yes, X2
Stage Cooking	Yes, 4 stages
Interior Light	Yes
Automatic Voltage Sensor	Yes *(North America only >1200W)*
Air Filter	Yes, 1 removable with cleaning reminder
Signal	End of cycle, adjustable
Door Handle	Lift & Pull
Exterior Finish	Stainless steel
Interior Finish	Stainless steel

Electrical Configuration

Region	Model #/ UPC	Automatic Voltage Sensor	Power Consumption	Power Output (microwave)	Power Source	Plug Configuration		Cord Length	Frequency	Magnetron
North America *single phase*	**RFS12TS** 728028020878	No	2000 W, 16A	1200W*	120V, 60Hz, 20A, single phase	NEMA 5-20		5 ft. (1.5m)	2450MHz	2
North America *single phase*	**RFS18TS** 728028020885	Yes	2800 W, 13.5A	1800W*	208/240V, 60Hz, 20A, single phase	NEMA 6-20		5 ft. (1.5m)	2450MHz	2
North America *single phase*	**RFS21TS** 728028471250	Yes	3200 W, 15.5A	2100W*	208/240V, 60Hz, 20A, single phase	NEMA 6-20		5 ft. (1.5m)	2450MHz	2

Specification #:

AIA File #:

225 49th Ave. Dr. SW, Cedar Rapids, IA 52404 U.S.A.
800-233-2366 • 319-368-8120 • Fax: 319-368-8198
www.acpsolutions.com

Part No. 20155301
Updated 12/2/2020
© 2020 ACP, Inc., Cedar Rapids, Iowa 52404

an Ali Group Company

The Spirit of Excellence

For future reference, please write the Model Number and Serial Number here.

Model Number_____

Serial Number_____

Commercial Microwave Oven Warranty

ACP warrants this product only when the original purchaser uses the oven for commercial food service preparation.

Warranty

ACP, Inc. reserves the right, at its sole discretion, to repair or replace failed product covered by this warranty with new or factory recertified product of the same or similar model.

First through Third Year

ACP will repair or replace any part (f.o.b. Cedar Rapids, IA U.S.A.) that has failed due to workmanship or materials, including related labor and travel, except as provided in this warranty.

OWNER RESPONSIBILITIES:

- To obtain warranty service in the USA, you must contact ACP, Inc. ComServ Customer Service to request service at: Phone 866.426.2621 or email: commercialservice@acpsolutions.com. Outside the USA contact your local authorized distributor.
- Provide proof of purchase.
- Provide normal care and maintenance, including cleaning as instructed in owner's manual or product safety guide.
- Replace owner replaceable items where directions appear in the owner's manual.
- Make product accessible for service.
- Pay for premium service costs for service outside servicer's normal business hours and service area.
- Pay for service calls related to product installation and customer education.
- Pay for service calls and or freight charges for items not covered as listed below.

ITEMS NOT COVERED:

- Failures caused by:
  - Abuse or misuse.
  - Accident, fire, flood or acts of nature.
  - Any modification, alteration, adjustment or repair service not authorized by ACP.
  - Grease or other material buildup due to improper cleaning or maintenance.
  - Connection to an improper power supply.
  - Operating an empty oven.
  - Use of improper pans, containers, or accessories that cause damage to the product.
- Normal product maintenance and cleaning, including light bulbs.
- Lost or broken air filters or antenna shields.
- Replacement of oven liners.
- Damages which occur in shipment.
- Broken ceramic tray, stirrer covers.
- General rebuilding or refurbishing.

WARRANTY LIMITATIONS:

- Begins at date of original purchase.
- Applies to product used for NORMAL commercial food preparation.
- Service must be performed by an authorized ACP servicer.
- Replaced equipment warranty coverage will be for the remainder of the original equipment warranty.

WARRANTY IS VOID IF:

- Serial plate is defaced.
- Product is altered by user.
- Product is not installed or used according to manufacturer's instructions.
- Product is installed in a prison or correctional facility.

For answers to questions regarding the above, contact equipment supplier or:

ACP Accelerated Cooking Products

ACP, Inc.
225 49th Avenue Drive SW
Cedar Rapids, Iowa 52404 U.S.A.
1-866-426-2621 (inside U.S.A. & Canada)
1-319-368-8120 (outside U.S.A. & Canada)

ANY IMPLIED WARRANTY OF MERCHANTABILITY AND/OR IMPLIED WARRANTY OF FITNESS FOR A PARTICULAR PURPOSE IS HEREBY EXCLUDED. IN NO EVENT SHALL ACP BE LIABLE FOR INCIDENTAL OR CONSEQUENTIAL DAMAGES.

Part No. 20098401
Printed 9/13

ACP Inc. • **www.acpsolutions.com**

© 2013 ACP, Inc.
Cedar Rapids, IA 52404

Como fuente de consulta para el futuro, anote aquí el Número de modelo y el Número de serie.

Número de modelo _____

Número de serie _____

Garantía de Horno Microondas Comercial

ACP garantiza este producto sólo si el comprador original usa el horno para preparación de alimentos con fines comerciales.

Garantía

A su discreción única, ACP, Inc. se reserva el derecho de reparar o reemplazar un producto cubierto bajo esta garantía que haya fallado por un producto nuevo o reconstruido de un modelo igual o similar.

Del primer al tercer año

ACP se compromete a reparar o reemplazar cualquier pieza, porte por cobrar, que haya fallado como consecuencia de la fabricación o los materiales, incluida la correspondiente mano de obra y transporte, con excepción de lo dispuesto en esta garantía.

DEBERES DEL PROPIETARIO:

- Para obtener el servicio de garantía en EE.UU., deberá comunicarse con Apoyo al Servicio ComServ de ACP, Inc. para solicitar servicio al: teléfono 866.426.2621 o por correo electrónico: commercialservice@acpsolutions.com. Fuera de EE.UU, comuníquese con su distribuidor local autorizado.
- Proporcionar prueba de compra.
- Prestar el cuidado y mantenimiento normal, incluida la limpieza de acuerdo con las instrucciones del manual del propietario o la guía de seguridad del producto.
- Reemplazar los elementos reemplazables por el propietario para lo cual se incluyan las instrucciones en el manual del propietario.
- Permitir el acceso al producto para fines de reparación.
- Pagar un precio de reparación más elevado por concepto de servicios fuera del horario y zona de trabajo normales de la empresa de servicio técnico.
- Pagar llamadas de servicio técnico relacionadas con la instalación del producto y la formación del cliente.
- Pagar llamadas de servicio técnico y/o cargos de transporte por los elementos no amparados según se indica a continuación.

ELEMENTOS NO AMPARADOS:

- Fallos ocasionados por:
  - Abuso o mal uso.
  - Accidentes, incendio, inundación o casos fortuitos.
  - Toda modificación, alteración, ajuste o servicio de reparación no autorizados por ACP.
  - Acumulación de grasa u otras substancias debida a limpieza o mantenimiento incorrectos.
  - Conexión a una fuente de alimentación inadecuada.
  - Usar el horno estando vacío.
  - Uso de cacerolas, recipientes o accesorios inadecuados que dañen el producto.
- Mantenimiento y limpieza normal del producto, incluidas las bombillas eléctricas.
- Perdidos o rotos los filtros de aire o escudos de antena.
- Sustitución de revestimientos de horno.
- Daños ocurridos durante el envío.
- Ruptura de repisas de porcelana.
- Reconstrucción o modernización generales.

LIMITACIONES DE LA GARANTÍA:

- Empieza a partir de la fecha original de compra.
- Se aplica a productos utilizados para la preparación NORMAL de alimentos con fines comerciales.
- El servicio debe ser prestado por un servicio técnico ACP autorizado.
- La cubierta en garantía del equipo reemplazado estará avalada por el resto del periodo de garantía del equipo original.

LA GARANTÍA SE ANULA SI:

- Se borra el número de serie de la chapa correspondiente.
- El usuario modifica el producto.
- No se instala o utiliza el producto de acuerdo con las instrucciones del fabricante.
- El producto se instala en una prisión o institución correccional.

Si tiene preguntas acerca de la información suministrada, puede ponerse en contacto con el proveedor del equipo o con:

ACP
Accelerated Cooking Products

ACP, Inc.
225 49th Avenue Drive SW
Cedar Rapids, Iowa 52404 U.S.A.
1-866-426-2621 (en EE.UU. y Canadá)
1-319-368-8120 (fuera de EE.UU. y Canadá)

CUALQUIER GARANTÍA IMPLÍCITA DE COMERCIALIZACIÓN Y/O GARANTÍA IMPLÍCITA DE ADECUACIÓN PARA UN PROPÓSITO EN PARTICULAR QUEDA POR LA PRESENTE EXCLUIDA. BAJO NINGUNA CIRCUNSTANCIA SERÁ ACP RESPONSABLE DE DAÑOS INCIDENTALES O EMERGENTES.

Nro. de pieza 20098401
Impreso 9/13

***ACP Inc.*• www.acpsolutions.com**

© 2013 ACP, Inc.
Cedar Rapids, IA 52404

Pour référence ultérieure, inscrire le numéro de modèle et de série ici.

Numéro de modèle _____

Numéro de série _____

Garantie pour four à micro-ondes commercial

ACP garantit ce produit seulement lorsque l'acheteur d'origine utilise le four dans la préparation commerciale d'aliments de restauration.

Garantie

ACP, Inc. se réserve le droit, à sa seule discrétion, de réparer ou de remplacer le produit défaillant couvert par la présente garantie par un nouveau produit ou un produit remis à neuf du même modèle ou d'un modèle similaire.

De la première à la troisième année

ACP réparera ou remplacera toute pièce, fret payable à destination, en cas de défaillance résultant de la qualité d'exécution ou des matériaux, y compris une défaillance associée à la main-d'œuvre et au transport, sauf stipulation de la présente garantie.

RESPONSABILITÉS DU PROPRIÉTAIRE :

- Pour bénéficier du service de garantie aux États-Unis, contacter le service clientèle d'ACP, Inc. ComServ pour demander ledit service, par téléphone au : 866.426.2621 ou par courriel à l'adresse : commercialservice@acpsolutions.com. À l'extérieur des États-Unis, contacter le distributeur local agréé.
- Fournir une preuve d'achat.
- Assurer une maintenance et un entretien réguliers, y compris un nettoyage conformément aux instructions du manuel de l'utilisateur ou du guide sur la sécurité des produits.
- Remplacer les articles remplaçables par le propriétaire, conformément aux directives du manuel de l'utilisateur.
- Rendre le produit accessible pour l'entretien.
- Payer des primes de service pour tout service fourni en dehors des heures ouvrées normales et à l'extérieur de la zone de service.
- Payer pour les appels de service associées à l'installation du produit et à la formation du client.
- Payer pour les appels de service et/ou les frais de transport pour les éléments non couverts listés ci-dessous :

ÉLÉMENTS NON COUVERTS :

- Défaillances causées par :
  - Abus ou mésusage.
  - Accident, incendie, inondation ou calamités naturelles.
  - Toute modification, toute altération, tout réglage ou toute réparation non autorisé(e) par ACP.
  - Accumulation de graisse ou d'autre matière résultant d'un nettoyage ou d'un entretien inadéquat.
  - Connexion à une source d'alimentation électrique inadéquate.
  - Fonctionnement du four à vide.
  - Utilisation de récipients, de conteneurs ou d'accessoires inadéquats qui endommagent le produit.
- Entretien et nettoyage normal du produit, y compris les ampoules.
- Filtres à air perdus ou brisés, bouclier antenne.
- Remplacement des revêtements de fours.
- Dommages survenus pendant l'expédition.
- Étagères en céramique brisées.
- Réfection ou remise à neuf générale.

LIMITATIONS DE GARANTIE :

- Commence à partir de la date d'achat d'origine.
- S'applique au produit pour la préparation commerciale NORMALE d'aliments.
- L'entretien doit être effectué par un préposé à l'entretien agréé par ACP.
- La couverture de la garantie pour l'équipement de remplacement s'étend pendant le reste de la durée de la garantie de l'équipement d'origine.

LA GARANTIE EST NULLE SI :

- La plaque du numéro de série est défigurée.
- Le produit est modifié par l'utilisateur.
- Le produit n'est pas installé ou utilisé conformément aux instructions du fabricant.
- Le produit est installé dans un établissement pénitentiaire ou correctionnel..

Pour obtenir toute information complémentaire portant sur les éléments ci-dessus, contacter le fournisseur de l'équipement ou :

ACP Accelerated Cooking Products

ACP, Inc.
225 49th Avenue Drive SW
Cedar Rapids, Iowa 52404 U.S.A.
1-866-426-2621 (pour les États-Unis et le Canada)
1-319-368-8120 (en dehors des États-Unis et du Canada)

TOUTE GARANTIE IMPLICITE DE QUALITÉ MARCHANDE ET/OU TOUTE GARANTIE IMPLICITE D'ADÉQUATION À USAGE PARTICULIER EST EXCLUE PAR LA PRÉSENTE. EN AUCUN CAS ACP NE POURRA ÊTRE TENUE RESPONSABLE POUR DES DOMMAGES INDIRECTS OU CONSÉCUTIFS.

N° de pièce 20098401
Imprimé 9/13

© 2013 ACP, Inc.
Cedar Rapids, IA 52404

CAM #24-0079
Exhibit 1
Page 162 of 288

Notieren Sie die Modell- und Seriennummer für spätere Bezugnahme bitte hier.

Modellnummer _____

Seriennummer _____

Garantie für das gewerbliche Mikrowellengerät

ACP bietet nur dann Garantieleistungen für dieses Produkt, wenn der ursprüngliche Käufer das Gerät für die gewerbliche Essenszubereitung verwendet.

Garantie

ACP, Inc. behält sich das Recht vor, ein fehlerhaftes, unter dieser Garantie stehendes Produkt zu reparieren oder mit einem neuen bzw. generalüberholten Produkt desselben bzw. eines ähnlichen Modells zu ersetzen.

Erstes bis drittes Jahr

ACP repariert oder ersetzt mit Ausnahme der in dieser Garantie aufgeführten Bedingungen jedes Teil, Unfrei Haus, einschließlich damit verbundener Arbeits- und Reisekosten, welches aufgrund von Verarbeitungs- oder Materialmängeln versagt.

PFLICHTEN DES EIGENTÜMERS:

- Für Leistung im Gewährleistungsfall in den USA setzen Sie sich mit dem ComServ-Kundendienst von ACP, Inc. folgendermaßen in Verbindung: Telefonisch: 866.426.2621 oder E-Mail: commercialservice@acpsolutions.com. Außerhalb der USA setzen Sie sich mit Ihrem autorisierten Vertriebshändler vor Ort in Verbindung.
- Vorlage des Kaufnachweises.
- Vornahme normaler Pflege und Wartung. Dazu zählt die Reinigung nach den Instruktionen im Benutzer- oder Produktsicherheitshandbuch.
- Austausch von durch den Eigentümer austauschbaren Teilen gemäß den im Benutzerhandbuch angegebenen Anweisungen.
- Bereitstellung des Produkts für Wartungsarbeiten.
- Zahlung eines Aufschlags für Wartungsarbeiten, die außerhalb der normalen Öffnungszeiten und des normalen Wartungsbereichs vorgenommen werden.
- Zahlung für Wartungsarbeiten, die mit der Installation des Produkts und der Schulung des Kunden zusammenhängen.
- Zahlung für Wartungsarbeiten und/oder Frachtkosten für nachstehende, nicht von der Garantie abgedeckte Punkte.

NICHT VON DER GARANTIE ABGEDECKTE PUNKTE:

- Versagen aus folgenden Ursachen:
  - Missbrauch bzw. Fehlgebrauch.
  - Unfall, Brand, Überschwemmung und höhere Gewalt.
  - Alle Modifikationen, Änderungen, Anpassungen oder Reparaturen, die nicht von ACP genehmigt wurden.
  - Ansammlung von Fett oder anderen Stoffen aufgrund unsachgemäßer Reinigung bzw. Wartung.
  - Anschluss an eine ungeeignete Stromversorgung.
  - Betrieb eines leeren Geräts.
  - Gebrauch ungeeigneter Pfannen, Behälter oder Zubehörteile, die das Produkt beschädigen.
- Normale Wartung und Reinigung des Produktes, darunter Glühbirnen.
- Verlorene oder defekte Luftfilter oder Antenne abschirmt.
- Ersatz Backofenauskleidungen.
- Versandschäden.
- Zerbrochene Keramikabstellflächen.
- Allgemeine Überholungs- bzw. Instandsetzungsarbeiten.

GARANTIEEINSCHRÄNKUNGEN:

- Beginnen ab Datum des Originalkaufs.
- Gelten für Produkte, die für die NORMALE gewerbliche Essenszubereitung verwendet werden.
- Die Wartung muss von einem von ACP befugten Wartungstechniker vorgenommen werden.
- Die Garantie für ein ersetztes Gerät gilt für die restliche Zeit der ursprünglichen Gerätegarantie.

DIE GARANTIE ERLISCHT IN DEN FOLGENDEN FÄLLEN:

- Serienschild wurde unkenntlich gemacht.
- Vom Benutzer wurden Änderungen am Produkt vorgenommen.
- Das Produkt wurde nicht gemäß den Anweisungen des Herstellers installiert oder verwendet.
- Das Produkt wird in einer Justizvollzugsanstalt installiert.

Setzen Sie sich in Bezug auf Fragen zu den oben angeführten Punkten mit dem Lieferanten des Geräts in Verbindung oder wenden Sie sich an:

ACP Inc.
Accelerated Cooking Products

ACP, Inc.
225 49th Avenue Drive SW
Cedar Rapids, Iowa 52404 U.S.A.
1-866-426-2621 (von innerhalb der USA und Kanada)
1-319-368-8120 (von außerhalb der USA und Kanada)

JEGLICHE KONKLUDENTE GEWÄHRLEISTUNG DER TAUGLICHKEIT UND/ODER EIGNUNG FÜR EINEN BESTIMMTEN ZWECK IST HIERMIT AUSGESCHLOSSEN. IN KEINEM FALL HAFTET ACP FÜR BEGLEIT- ODER FOLGESCHÄDEN.

Teile-Nr. 20098401
Gedruckt 9/13

© 2013 ACP, Inc.
Cedar Rapids, IA 52404

KM-350/520/660M_J(Z)

SLIM-LINE MODULAR CRESCENT CUBER

KM-350/520/660M_J(Z)
12/06/22
Item # 13260

Item #: _____
Project: _____
Qty: _____
AIA#: _____

KM EDGE X ICE MACHINE SERIES

W x D x H
22" x 27 3/8" x 28"

Air-Cooled
KM-350MAJ ★
KM-520MAJ ★
KM-660MAJ
Air-cooled model shown on optional bin: B-300

Water-Cooled
KM-350MWJ
KM-520MWJ
KM-660MWJ

Remote Air-Cooled
KM-520MRJZ★
KM-660MRJZ★



Features

- Individual crescent cube
- Factory-installed ultrasonic bin control can be adjusted on site
- Simple, one-hour cleaning process CLEANASSIST

- Durable construction with fewer parts
- Self-diagnostic programming automatically adjusts to changing conditions
- Snap fit parts for easy cleaning
- Stainless steel double-sided evaporator
- CycleSaver™ design
- Protected by H-GUARD Plus Antimicrobial Agent
- EverCheck™ alert system
- Removable air filters (air-cooled model only)
- R-404A Refrigerant

Available on Bins/Dispensers:

B-250SF	B-500SF	B-800SF	B-1150SS	DB-130H
B-300SF	B-700SF	B-900SF	B-1300SS	DB-200H
				DM-200B

Top kit may be required. See Bin Spec Sheets.

Warranty:
3 Year Parts & Labor on entire machine 5 Year Parts & Labor on evaporator
5 Year Parts on Compressor; air-cooled condenser coil
Valid in United States, Canada, Puerto Rico and U.S. Territories. Contact factory for warranty in other countries.
Shipping: (LxWxH) 33.5" x 25.88" X 34.6" Volume: 17.36ft³

		ICE PRODUCTION		WATER USAGE		ELECTRICAL							
Condenser	Model	Air / Water Temp Lbs. per 24 hours 70°/ 50°F	90°/ 70°F	Potable Gal. per 100 lbs. 90°/ 70°F	Condenser Gal. per 100 lbs. 90°/ 70°F	kWh Used per 100 lbs. 90°/ 70°F	Min. Circuit Amp - Max. Fuse/Breaker	Amperage	Voltage	Circuit Wires (including ground)	Heat Rejection BTU/hr.	Refrigerant Charge Amount	Net / Ship Weight (lbs.)
Air	KM-350MAJ ★	489	393	14.5	N/A	5.42	15A	9.05A	115V/60/1	3	5,700	1 lb. 3.4 oz.	125 / 175
Water	KM-350MWJ	414	383	15.5	109	4.90	15A	7.5A	115V/60/1	3	6,600	11.6 oz.	126 / 175
Air	KM-520MAJ ★	556	480	14.7	N/A	4.68	20A	10.6A	115V/60/1	3	6,600	1 lb. 10.8 oz.	145 / 175
Water	KM-520MWJ	474	444	14.8	75	4.65	20A	8.45A	115V/60/1	3	6,300	12.7 oz.	127 / 175
Remote	KM-520MRJZ ★	547	495	13.6	N/A	4.80	20A	12.05A	115V/60/1	3	6,200	2 lb. 4.7 oz. 4 lb. 2.7 oz.†	145 / 175
Air	KM-660MAJ	650	560	14.8	N/A	5.3	20A	15.2A	115V/60/1	3	8,000	1 lb. 9.8 oz.	150 / 180
Water	KM-660MWJ	647	630	16.1	152	4.28	20A	12.35A	115V/60/1	3	8,900	15.2 oz.	130 / 180
Remote	KM-660MRJZ ★	642	570	15.0	N/A	5.25	20A	16.1A	115V/60/1	3	8,100	2 lb. 4.7 oz. 4 lb. 2.7 oz.†	150 / 180

†(with condenser)

Power cord not included. Must be hard-wired at site.

Hoshizaki reserves the right to change specifications without notice.

CAM #24-0670
Exhibit 1
Page 164 of 288

KM-350/520/660M_J(Z)

KM-350/520/660M_J(Z)
12/06/22
Item # 13260

SLIM-LINE MODULAR CRESCENT CUBER

KM Edge Cube Dimensions†

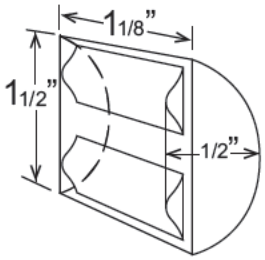

† approximate size in inches, image not to scale

Operating Limits

- Ambient Temp Range 45 - 100°F
- Water Temp Range 45 - 90°F
- Water Pressure 10 - 113 PSIG
- Voltage Range 104 - 127V

Service

- Panels easily removed and all components accessible for service.
- Removable/cleanable air filters. (Air-cooled model only)
- Allow 6" (15 cm) clearance at rear, sides, and top for proper air circulation and ease of maintenance/service.

Plumbing

- Icemaker water supply line: minimum 1/4" nominal ID copper water tubing or equivalent
- Icemaker drain line: minimum 3/4" nominal ID hard pipe or equivalent

Water-Cooled Model (Lines Must Be Independent of Icemaker)

- Condenser water supply line: minimum 1/4" nominal ID copper water tubing or equivalent
- Condenser drain/return line: minimum 1/4" nominal ID hard pipe (open drain system) or copper water tubing (closed loop system) or equivalent

Water Filter

Please refer to water filter specification sheet for recommendations.

FRONT VIEW

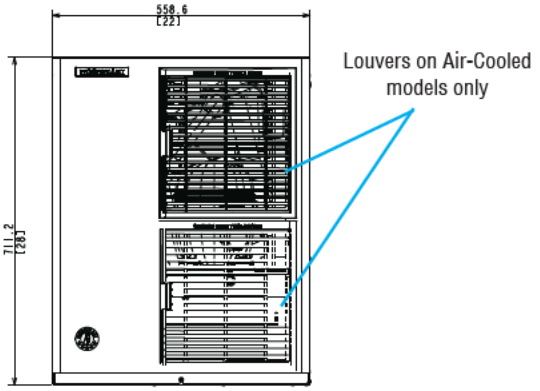

SIDE VIEW

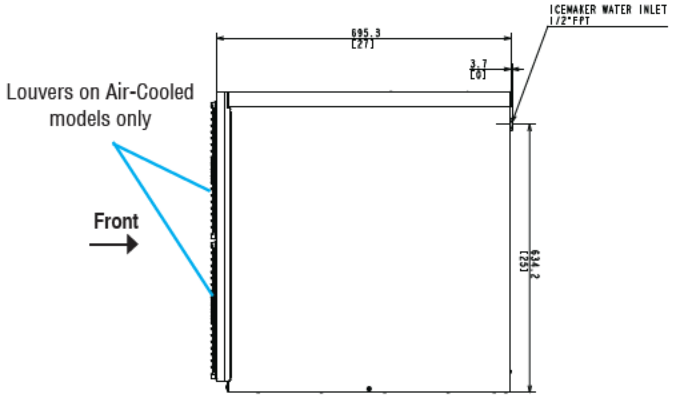

REAR VIEW

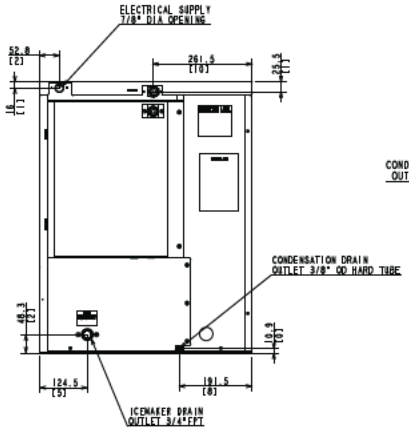

AIR-COOLED

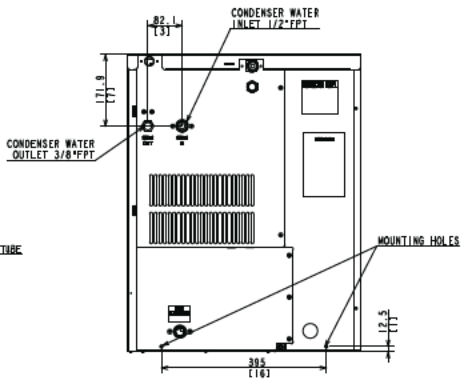

WATER-COOLED

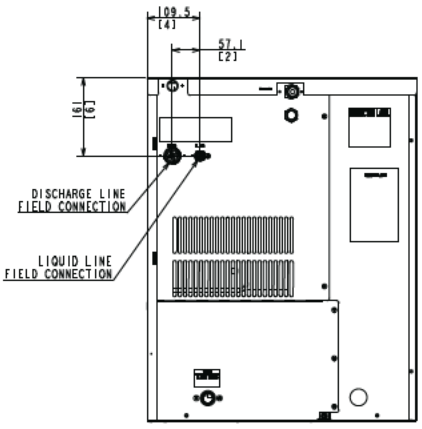

REMOTE AIR-COOLED

BOTTOM VIEW

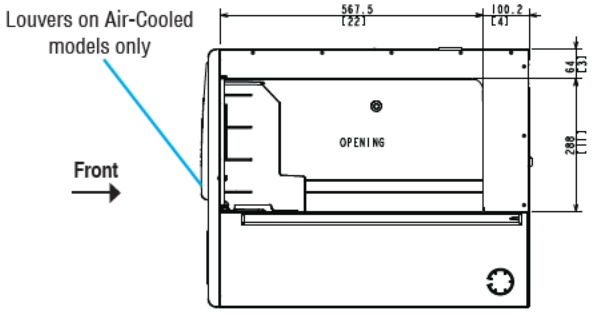

URC-5FZ Remote Condenser (Sold Separately)

(W x D x H) 21 13/16 x 14 1/16 x 32 13/16

For Use with KM-520MRJZ and KM-660MRJZ

Brazed Line Sets
(Sold Separately)
25' HS-5587
35' HS-5588

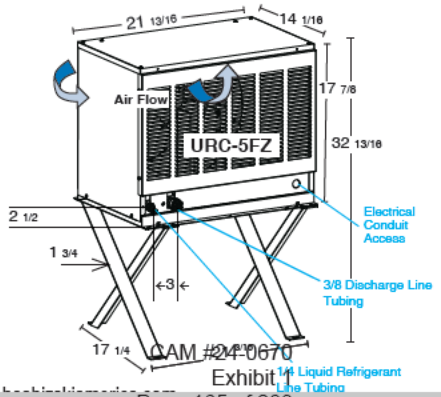

SF Bins

ICE STORAGE BIN SERIES

SF Bins
03/19/21
Item # 13163

Item #: _____

Project: _____

Qty: _____

AIA#: _____

SF - Stainless Steel Finish



B-250SF | B-300SF BD-300SF | B-500SF BD-500SF



B-700SF | B-800SF | B-900SF

Features

- **Protected by H-GUARD Plus Antimicrobial Agent**
- **Polyethylene bin liner for sanitary storage**
- **Sturdy construction for side-by-side or stacked ice machine installation**

- Ice storage capacity from 250 lbs. up to 900 lbs.
- Both surfaces are designed for easy cleaning
- Long lasting attractive appearance
- Foamed-in-place polyurethane insulation, in all bin walls and bottom, provides dependable ice storage
- H-GUARD Plus Antimicrobial adds extra protection to the ice scoop (included)

SF - Stainless Steel Finish

BD Bins

- Fit 24" - 24 1/2" deep ice machine without top kit extension

Warranty:
2 Year Parts & Labor (Production prior to January 2012)
3 Year Parts & Labor (Production January 2012 and after)
Valid in United States, Canada, Puerto Rico and U.S. Territories. Contact factory for warranty in other countries.

Model Number	Exterior Dimensions W x D x H*	Interior Dimensions W x D x H	Application Storage Capacity†	Cubic Volume	Shipping Dimensions L x W x H	Shipping Weight (lbs.)
B-250SF	30" x 32.3" x 33.4"	27" x 27.7" x 23.7"	250 lbs.	10.30 ft³	35" x 32" x 32"	—
B-300SF	22" x 32.3" x 46"	19" x 27.7" x 37.6"	300 lbs.	11.51 ft³	35" x 24" x 45"	125
BD-300SF	22" x 32.3" x 46"	19" x 27.7" x 37.6"	300 lbs.	11.51 ft³	35" x 24" x 45"	130
B-500SF	30" x 32.3" x 46"	27" x 27.7" x 37.6"	500 lbs.	16.33 ft³	35" x 32" x 45"	140
BD-500SF	30" x 32.3" x 46"	27" x 27.7" x 37.6"	500 lbs.	16.33 ft³	35" x 32" x 45"	140
B-700SF	44" x 32.3" x 46"	41" x 27.7" x 37.6"	700 lbs.	24.77 ft³	46" x 35" x 45"	175
B-800SF	48" x 32.3" x 46"	45" x 27.7" x 37.6"	800 lbs.	26.90 ft³	50.25" x 35" x 45"	185
B-900SF	52" x 32.3" x 46"	49" x 27.7" x 37.6"	900 lbs.	29.59 ft³	54.5" x 35" x 45"	195

*Height includes 6" legs
† Capacity based on volume x 30 lb/ft³ average density of ice.

Hoshizaki reserves the right to change specifications without notice.

SF Bins

ICE STORAGE BIN SERIES

SF Bins
03/19/21
Item # 13163

Ice Machine Model Application

	22" Width	22" Width	30" Width	30" Width	44" Width	44" Width	48" Width
	KM-350M KM-520M KM-660M F-450M F-801M F-1002M	KMD-410M† KMS-822M FD-650M-C† FD-1002M-C	KM-901M KM-1340M KM-1601M KML Series F-1501M F-2001	KMD-460M‡ KMD-530M‡ KMD-860M‡ KMS-1402M* KMS-2000M*	2 KM-350M 2 KM-520M 2 KM-660M IM-500S 2 F-450M 2 F-801M 2 F-1002M	2 KMD-410M 2 FD-650M-C 2 FD-1002M-C	KM-1301S KM-1400S KM-1601S KM-1900S KM-2200S KM-2600S
Bins B-300SF DB-130H	— *(DB-130H - KMD only)*	NEED HS-5424 HS-2153 *(KMD-410 on B-300 only)*	N/A	N/A	N/A	N/A	N/A
Bins B-250SF B-500SF	NEED HS-2033	NEED HS-2033 & HS-2129	—	NEED HS-2129	N/A	N/A	N/A
Bins B-700SF	NEED HS-2035	NEED HS-2035 & HS-2130	NEED HS-2034	NEED HS-2130 & HS-2034	—	NEED HS-2130 *(KMD-410 does not apply)*	N/A
Bins B-800SF	NEED HS-2035 & HS-2032	NEED HS-2035, HS-2032 & HS-2131	NEED HS-2034 & HS-2032	NEED HS-2131, HS-2034 & 2032	NEED HS-2032	NEED HS-2032 & HS-2131	—
Bins B-900SF	NEED HS-2035 & HS-2033	NEED HS-2035, HS-2033 & HS-2132	NEED HS-2035	NEED HS-2132 & HS-2035	NEED HS-2033	NEED HS-2033 & HS-2132	NEED HS-2032
Bins DB-200H DM-200B	NEED HS-2036 *(KM units only)*	N/A	— *(KML only)*	N/A	N/A	N/A	N/A

— No top kit necesary | N/A Combination of ice maker and bin is not possible

BD Bins fit 24" - 24 1/2" deep ice machine without Top Kit extension.
†**BD-300SF:** KMD-410M, KMS-822M, FD-650M-C, FD-1002M-C
‡**BD-500SF:** KMD-460M, KMD-530, KMD-860

* Any KMS or FD on bin need Top Kit Extension:
- HS-2129 - for use with B-500 bins
- HS-2130 - for use with B-700 bins
- HS-2131 - for use with B-800 bins
- HS-2132 - for use with B-900 bins

Top Kits:
HS-2032 - 4" ABS Top Kit
HS-2033 - 8" ABS Top Kit
HS-2034 - 14" ABS Top Kit
HS-2035 - 22" ABS Top Kit
HS-2036 - (2) 4" ABS Top Kits
HS-2066 - Seismic Kit for SD 500 Stands
HS-2071 - Anchored Leg Kit SD 500 Stands
HS-2111 - 11.3" x 26.2" Stainless Cover/Separator
HS-2148 - 30" x 3.1" Stainless Cover
HS-2153 - KMD-410 on B-300 bin
HS-2160 - 2 KM-901M

B-250SF



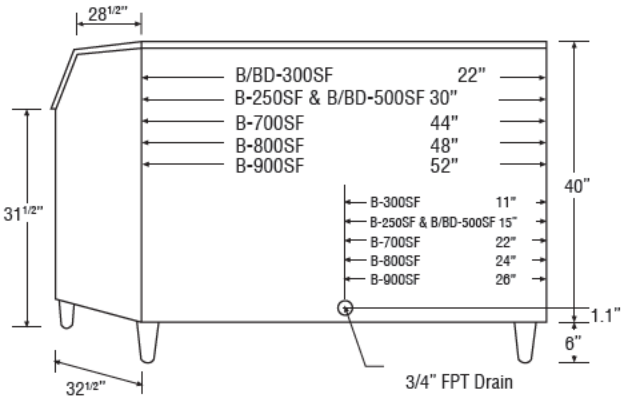

Ice Drop Area



B Bins



BD Bins



Bin Flanged Legs:
B/BD-300SF



Bin Legs:
B-250SF, B/BD-500SF
B-700SF, B-800SF
B-900SF

CAM #24-0070
Exhibit 1
Page 167 of 288

WATER FILTERS

FILTRATION SYSTEMS

WATER FILTERS
06/26/20
Item # 13076

Item #: _____

Project: _____

Qty: _____

AIA#: _____

H9320 FILTER
Single, Double, Triple



H9320-51

Single Configuration
18.4" H*



H9320-52

Double Configuration
19.11" H*



H9320-53

Triple Configuration
19.15" H*

**height includes manifold and cartridge*

HOSHIZAKI H9320 FILTER

Available in single, double and triple configurations. Rated NSF Class 1, STD 42, for taste, odor and chlorine reduction and for mechanical filtration (95.6% removal of particles one (1) micron and larger in size.)

- Keep ice makers functioning at full capacity
- 93.7% average reduction of chlorine from incoming water supply, eliminating tastes and odors of the ice
- Filters are rated as one (1) micron nominal producing crystal clear ice
- Decrease machine maintenance by reducing lime scale build-up

Model	Filter	Max Flow Rate	Working Pressure	Temperature	Capacity
H9320-51	4HC-H	2 gpm	10-125 psi	35-100°F	21,000 gal
H9320-52	4HC-H	4 gpm	10-125 psi	35-100°F	42,000 gal
H9320-53	4HC-H	6 gpm	10-125 psi	35-100°F	63,000 gal

Plumbing

Inlet/Outlet Connections: Single: (2) 3/8" FNPT
Double & Triple: (1) 3/4" MNPT / (1) 3/4" FNPT

The H9320 Filters and their respective cartridges have been tested and listed by NSF only for the functions listed above. Check for compliance with state and local laws and regulations. Do not use where the water is microbiologically unsafe, or with waters of unknown quality without adequate disinfection before or after the unit. The H9320 filter can be used with water that may contain filterable cysts.

The H9320 System is tested and certified by NSF International against NSF/ANSI Standard 42 for the reduction of:
Std. No. 42 - Aesthetic effects
Aesthetic Effects
Bacteriostatic Effects
Chemical Reduction
Chlorine
Mechanical Filtration
Nominal Particulate Class 1
Taste & Odor

E-10 PREFILTER
(9795-80)

E-20 PREFILTER
(9795-90)



E-10 PREFILTER
(9795-80)
Recommended for single configuraton



E-20 PREFILTER
(9795-90)
Recommended for twin and triple configuraton

E-10 and E-20 Prefilters can be used for ice. Everpure prefilters are designed to increase the life of Hoshizaki 4HC-H water filters in areas with an unusual amount of dirt in the water. With a 10 micron (nominal) rating, the economical Everpure prefilter traps much of the dirt which contributes to scale buildup in ice makers, and clogs the delicate orifices of other water-using equiment.

When you install an Everpure prefilter, the Hoshizaki 4HC-H water filters can concentrate on what they do best: remove particles one (1) micron nominal and larger in size.

Replacement Cartridges:
E-10 Prefilters: 12 pack (9534-12)
40 pack (9534-40)

E-20 Prefilters: 6 pack (9534-26)
20 pack (9534-20)

Warranty:
One Year replaceable elements*
One Year the entire system
* Warranty applies to material defects in materials & workmanship only.

Hoshizaki reserves the right to change specifications without notice.

WATER FILTERS

FILTRATION SYSTEMS

Model Number	Description Flow Rate (Gal. per min.)	Undercounter KMs	KM Cubers	IM Cubers	Cubelets & Flakers	DCM/DBs
H9320-51	Single (2 GPM)	AM-50 KM-81 KM-116 KM-161 KM-231 KM-301	KM-350, 520, 660 KML-325, 500, 700 KMD-410, 460, 530 KMS-830 DKM-500	IM-200, 500	All Models	All Models
H9320-52	Twin 2 x (2 GPM)	N/A	KM-901, 1100 KMD-860 KMS-822, 1122, 1402	IM-50BAA-Q	N/A	N/A
H9320-53	Triple 3 x (2 GPM)	N/A	KM-1301, 1340, 1601, 1900, 2200, 2600 KMH-2100 KMS-2000	N/A	N/A	N/A
H9655-11	Replacement Cartridge (1) One each	Recommended water filter configurations based on average ice machine usage and regular filter replacement. If your operation has challenging water conditions or higher usage, then it may be necessary to use an additional filter or prefilter.				

Single

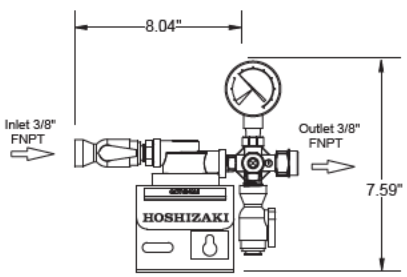

Twin

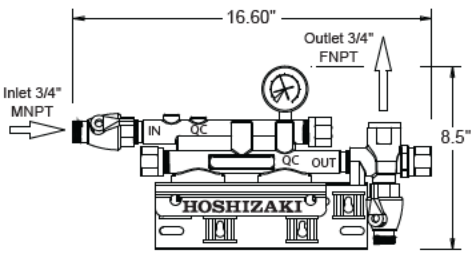

Triple

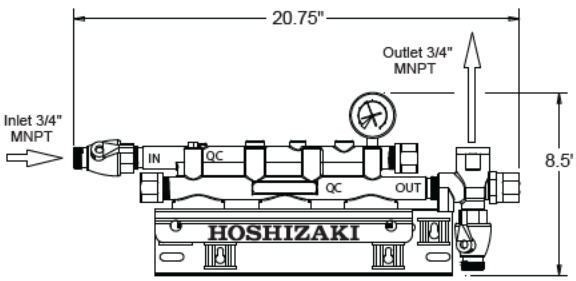

UR27B-GLP01

Undercounter 27”Refrigerator with Glass Door

STEELHEART

UR27B-GLP01
06/07/21
Item # 13584

Item #: _____

Project: _____

Qty: _____

AIA#: _____

W x D x H
27” x 31.5” x 31.9”*
*with 2.25” casters



Features

- **Engineered to maintain NSF-7 temperatures in 100°F ambient.**
- **Energy efficient LED interior lights with on/off switch**
- **Meets ADA requirements**

- Environmentally friendly R290 hydrocarbon refrigerant
- Stainless steel interior and exterior sides and top
- Cabinet and doors are insulated with 2” CFC free, foamed in place polyurethane
- Exclusive “stepped” door design to protect door gasket
- Spring assisted self-closing doors with stay open feature
- One piece, full length chrome handle
- Field reversible doors
- Front breathing air flow design
- Magnetic door gasket is easily removable for cleaning
- Hot gas condensate removal
- E-coated evaporator coil
- One epoxy coated shelf per section is standard
- Anodized aluminum shelf supports adjustable in 1/2” increments
- Standard with 2.25” casters (two with brakes)
- 10 ft. cord and plug

Dimensions / Capacity	One-Section UR27B-GLP01
Interior Storage Capacity (CF)	7.21 ft³
Interior Storage Capacity (CF) (AHAM)	6.21 ft³
Overall Width x Depth (including 1” bumper)	27” x 32.5”
Height (including 2.25” casters)	31.9”
Door Opening Width x Height	22.75” x 23”
Depth with Door Open at 90° (including 1” bumper)	55.5”
Adjustable Shelves	1
Shelf Dimensions (W x D)	22” x 16”
Crated Weight	183 lbs.
Crated Length x Width x Height	36” x 31.5” x 35.5”

Electrical / Refrigeration	One-Section UR27B-GLP01
Voltage	115/60/1
HACR Breaker	15.0 Amps
Electrical Connection (NEMA)	5-15P
Voltage Range	104-126
Ambient Temp. Range	45° to 100°F
Control Setpoint Range	32° to 52°F
Amperage	3
Energy Consumption (kWh/day) @ASHRAE	1.15
Heat Rejection (BTU/Hr.) @NSF	263
Approx. Nominal Compres. BTU/HR (HP)	988 (1/6HP)
Refrigerant / Charge Amount (oz)	R290 (2.3oz)

Options

- ☐ 4” casters
- ☐ 6” casters
- ☐ Additional epoxy shelves
- ☐ Stainless steel shelves
- ☐ Overshelves
- ☐ Foot pedals- Left hinge (HS-5378)
- ☐ Foot pedals- Right hinge (HS-5379)
- ☐ Lower epoxy shelf (HS-5161)
- ☐ Lower stainless steel shelf (HS-5169)

Warranty

3 Year - parts and Labor on entire machine.
5 Year - Parts on Compressor
Valid in United States, Canada, Puerto Rico and U.S. Territories. Contact factory for warranty in other countries.

Hoshizaki reserves the right to change specifications without notice.

UR27B-GLP01

Undercounter 27”Refrigerator with Glass Door

STEELHEART

UR27B-GLP01
06/07/21
Item # 13584

FRONT VIEW

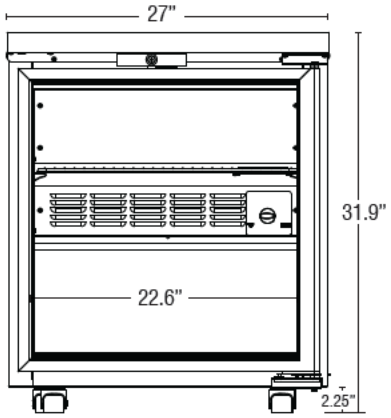

SIDE VIEW

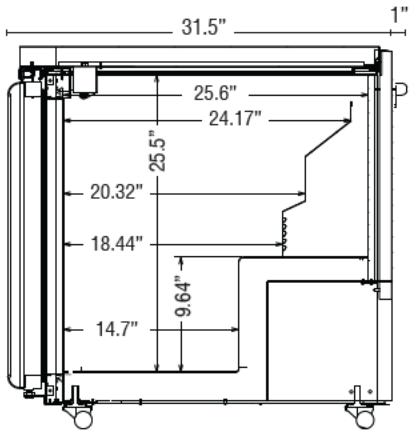

PLAN VIEW

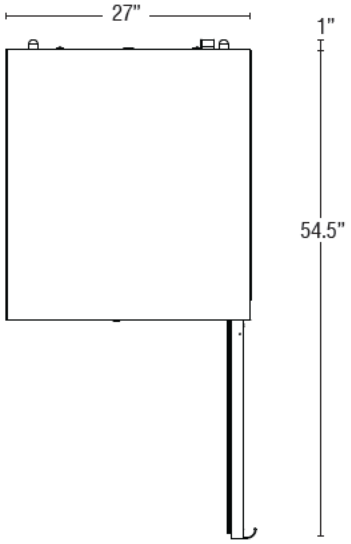

Cabinet Construction

The exterior cabinet top, front, and sides, are constructed of high quality stainless steel. The exterior back and bottom are constructed of coated steel. The cabinet interior features stainless steel back, sides, floor and ceiling. One heavy duty epoxy coated shelf per section is standard. Mounted on anodized aluminum pilasters the shelf is adjustable in ½” increments. Cabinet walls and doors are insulated with 2” of environmentally friendly, CFC free, foamed in place polyurethane. 2.25” polyolefin, stem casters (two with brakes) are standard.

Door Construction

Glass doors are constructed of high grade silver anodized aluminum with a full length chrome handle. Door glass is energy efficient multi pane, argon filled with locks. The door hinges are all metal and include an adjustable torsion spring closure that will not wear out like traditional cam-lift hinges. Hinge plates are constructed of heavy duty stainless steel. Doors stay open at 90° and are self-closing at 75°. Snap-in magnetic door gaskets are durable and easily removed for cleaning. Door hinging is field reversible (with an optional door reversal hinge kit).

Refrigeration System

The high efficiency refrigeration system is self-contained with an E-coated evaporator for extended life. Condensate removal is accomplished with an energy efficient non-electric evaporation system. A capillary tube controls the flow of environmentally friendly R290 refrigerant through the evaporator. Refrigeration system utilizes an “off cycle” defrost to eliminate any ice on the evaporator coil. 115 volt units are equipped with a ten foot cord and plug (20.0 amps or less).

CAM #24-0670
Exhibit 1
Page 171 of 288

R1A-FS(L)

One Section Full Stainless Door Refrigerator

STEELHEART

R1A-FS(L)
07/16/19
Item # 13512

Item #: _____
Project: _____
Qty: _____
AIA#: _____

W x D x H
27.5" x 33.5" x 79.5"*
*with 4" casters



Features

- **Maximum interior storage capacity with smallest external footprint**
- **Stainless steel interior with stainless steel exterior front, sides and top**
- **Unique ducted air distribution system**
- Energy efficient interior LED light
- Environmentally friendly R290 hydrocarbon refrigerant
- Solid state digital controller with temperature alarms and LED display (Fahrenheit or Celsius)
- Cabinet and doors are insulated with 2-3/8" of CFC free, foamed in place polyurethane
- Stainless steel exterior and interior door come standard with locks
- Exclusive stepped door design to protect recessed door gasket
- Spring assisted self-closing doors with stay open feature
- Sturdy 8 gauge stainless steel hinge plate with welded hinge pin
- Extruded aluminum flush mount door handle
- Field reversible doors
- Evaporator coils are epoxy electrocoated (E-Coat) to help fight corrosion
- Energy efficient automatic hot gas condensate evaporator
- Top mount refrigeration comes standard with a condenser filter
- Refrigerant flow is controlled with thermostatic expansion valve
- Stainless steel shelf supports
- (3) epoxy coated wire shelves are standard
- Standard with 4" casters (two with brakes)
- Stackable (two units high) to conserve warehouse floor space
- 10 ft. cord and plug

Dimensions / Capacity	One Section R1A-FS(L)
Interior Storage Capacity (CF) (AHAM)	23.10 ft³
Overall Width x Depth	27.5" x 33.5"
Height (including 4" casters)	79.5"
Door Opening Width x Height	21.75" x 59.25"
Depth with Door Open at 90⁰	59.25"
Adjustable Shelves	3
Shelf Dimensions (W x D)	21.25" x 26"
Crated Shipping Weight	345 lbs
Crated Length x Depth x Height	37.5" x 31.5" x 81"

Electrical / Refrigeration	One Section R1A-FS(L)
Voltage	115/60/1
HACR Breaker	15.0 Amps
Electrical Connection (NEMA)	5-15P
Voltage Range	104-126
Ambient Temp. Range	45° to 100°F
Control Setpoint Range	31° to 52°F
Amperage	5
Energy Consumption (kWh/day) @ASHRAE	1.25
Heat Rejection (BTU/Hr.) @NSF	317
Approx. Nominal Compres. BTU/HR (HP)	770(1/4HP)
Refrigerant / Charge Amount (oz)	R290 / (4.6 oz)

Options

- ☐ Additional epoxy shelves
- ☐ Stainless steel shelves
- ☐ Tray/Pan slides
- ☐ Foot pedal door opener
- ☐ 6" Adjustable legs
- ☐ Condensate pan (HS-5462)

Warranty

* 3 Year - parts and Labor on entire machine.
5 Year - Parts on Compressor
Valid in United States, Canada, Puerto Rico and U.S. Territories. Contact factory for warranty in other countries.

Hoshizaki reserves the right to change specifications without notice.

R1A-FS(L)

One Section Full Stainless Door Refrigerator

R1A-FS(L)
07/19/19
Item # 13512

FRONT VIEW

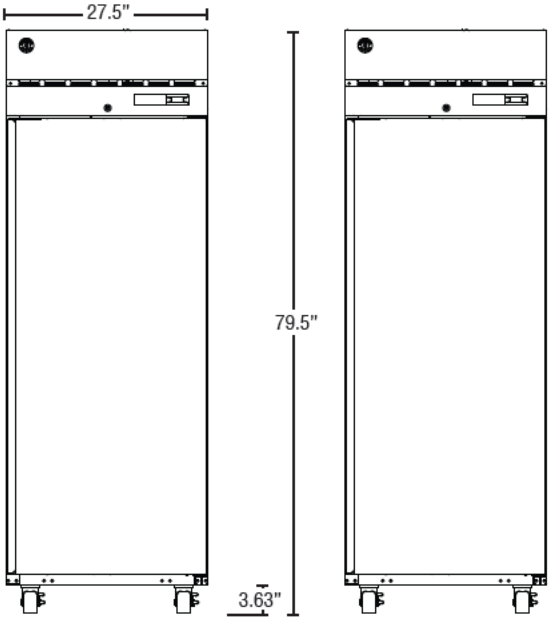

(FS) - Right Hinge *(FSL) - Left Hinge*

SIDE VIEW

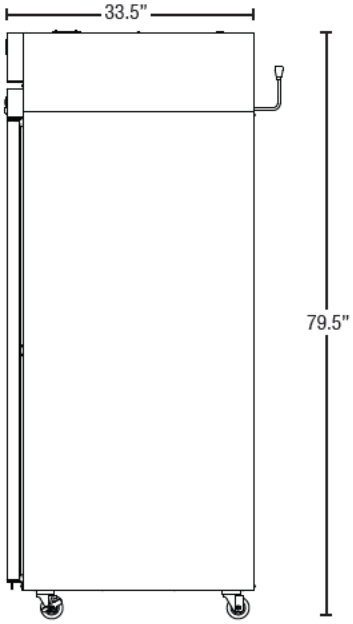

PLAN VIEW

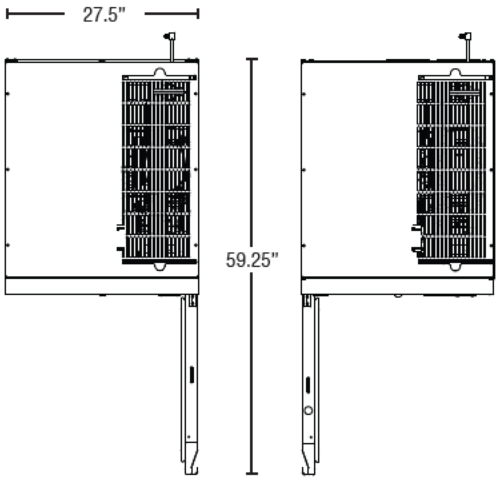

(FS) - Right Hinge *(FSL) - Left Hinge*

Cabinet Construction

The exterior cabinet front, sides, and top are constructed of high quality stainless steel. The exterior back, and bottom are constructed of coated steel. The cabinet interior is constructed of stainless steel with a unique ducted air flow system. Three (3) heavy duty epoxy coated shelves per section are standard. Mounted on stainless steel pilasters shelves are adjustable in 1" increments. Cabinet walls and doors are insulated with 2-3/8" of environmentally friendly, CFC free, foamed in place polyurethane. An interior LED light is automatically activated when doors are opened. 4" polyolefin, casters (two with brakes) are standard.

Door Construction

Doors are constructed of a high grade stainless steel exterior and interior and are standard with locks. Hoshizaki's exclusive "stepped" design protects the recessed gasket while product is being removed from the cabinet. Doors are provided with a one piece, full length extruded aluminum flush mount handle and are mounted on eight (8) gauge stainless steel hinge plates with a welded hinge pin. Spring assisted self-closing doors are equipped with a stay open feature past 90 degrees. Snap-in magnetic door gaskets are easily removed for cleaning. Door hinging is field reversible.

Refrigeration System

The high efficiency refrigeration system is self-contained with an epoxy electrocoated (E-Coat) evaporator for extended life. Top mounted refrigeration system is easily accessible for service and includes a condenser filter with easy access from the top of the unit. The refrigeration system components are assembled on a high density expanded polypropylene platform that is removable from the main unit. A unique ducted air flow system achieves uniform air distribution within the cabinet to eliminate hot spots. Condensate removal is accomplished with a top mounted energy efficient non-electric evaporation system. A thermostatic expansion valve (TXV) controls the flow of environmentally friendly R290 refrigerant through the evaporator. Refrigeration system utilizes a time initiated off cycle defrost to eliminate any ice on the evaporator coil. Solid state digital controls monitor the operation and performance of the refrigeration system. The controls also provide visual high and low temperature and high and low voltage alarms. A LED display shows the cabinet temperature and is adjustable to Fahrenheit or Celsius. 115 volt units are equipped with a ten foot cord and plug (20.0 amps or less).

F1A-FS(L)

One Section Full Solid Door Freezer

STEELHEART

F1A-FS(L)
09/28/22
Item # 13506

W x D x H
27.5" x 33.5" x 79.5"*
*with 4" casters



Item #: _____
Project: _____
Qty: _____
AIA#: _____

Features

- **Maximum interior storage capacity with smallest external footprint**
- **Stainless steel interior with stainless steel exterior front, sides and top**
- **Unique ducted air distribution system**
- Energy efficient interior LED light
- Environmentally friendly R290 hydrocarbon refrigerant
- Solid state digital controller with temperature alarms and LED display (Fahrenheit or Celsius)
- Cabinet and doors are insulated with 2-3/8" of CFC free, foamed in place polyurethane
- Stainless steel exterior and interior door come standard with locks
- Exclusive stepped door design to protect recessed door gasket
- Spring assisted self-closing doors with stay open feature
- Sturdy 8 gauge stainless steel hinge plate with welded hinge pin
- Extruded aluminum flush mount door handle
- Field reversible doors
- Evaporator coils are epoxy electrocoated (E-Coat) to help fight corrosion
- Energy efficient automatic hot gas condensate evaporator
- Top mount refrigeration comes standard with a condenser filter
- Refrigerant flow is controlled with thermostatic expansion valve
- Stainless steel shelf supports
- (3) epoxy coated wire shelves are standard
- Standard with 4" casters (two with brakes)
- Stackable (two units high) to conserve warehouse floor space
- 10 ft. cord and plug

FACTORY WARRANTY Parts & Labor 3 YR Entire Machine Parts 5 YR Compressor

NATURAL REFRIGERANT

GEORGIA MADE

Dimensions / Capacity	One Section F1A-FS(L)
Interior Storage Capacity (CF) (AHAM)	23.10 ft³
Overall Width x Depth	27.5" x 33.5"
Height (including 4" casters)	79.5"
Door Opening Width x Height	21.75" x 59.25"
Depth with Door Open at 90°	59.25"
Adjustable Shelves	3
Shelf Dimensions (W x D)	21.25" x 26"
Crated Shipping Weight	345 lbs
Crated Length x Depth x Height	37.5" x 31.5" x 81"

Electrical / Refrigeration	One Section F1A-FS(L)
Voltage	115/60/1
HACR Breaker	15.0 Amps
Electrical Connection (NEMA)	5-15P
Voltage Range	104-126
Ambient Temp. Range	45° to 100°F
Control Setpoint Range	-10° to +12°F
Amperage	8.46
Energy Consumption (kWh/day) @ASHRAE	6.25
Heat Rejection (BTU/Hr.) @NSF	1178
Approx. Nominal Compres. BTU/HR (HP)	1425(3/4HP)
Refrigerant / Charge Amount (oz)	R290 / (4.1 oz)

Options

- ☐ Additional epoxy shelves
- ☐ Stainless steel shelves
- ☐ Tray/Pan slides
- ☐ Foot pedal door opener
- ☐ 6" Adjustable legs
- ☐ Condensate pan (HS-5462)

Warranty

3 Year - parts and Labor on entire machine.
5 Year - Parts on Compressor
Valid in United States, Canada, Puerto Rico and U.S. Territories. Contact factory for warranty in other countries.

Hoshizaki reserves the right to change specifications without notice.

F1A-FS(L)

One Section Full Solid Door Freezer

STEELHEART

F1A-FS(L)
09/28/22
Item # 13506

FRONT VIEW

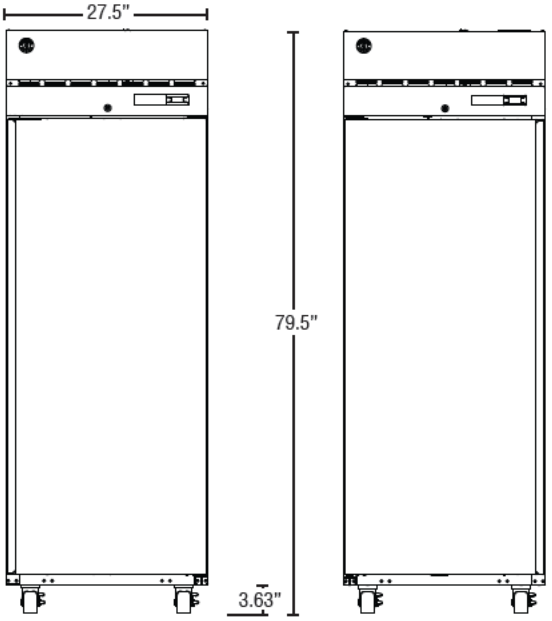

F1A-FS - Right Hinge *F1A-FSL - Left Hinge*

SIDE VIEW

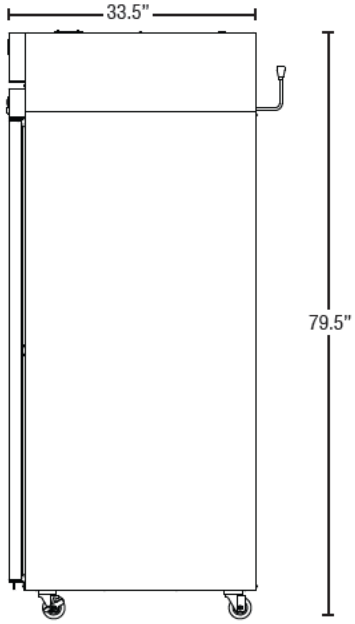

PLAN VIEW

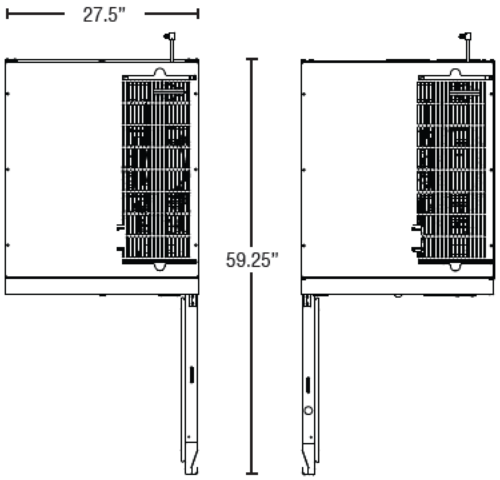

F1A-FS - Right Hinge *F1A-FSL - Left Hinge*

Cabinet Construction

The exterior cabinet front, sides, and top are constructed of high quality stainless steel. The exterior back, and bottom are constructed of coated steel. The cabinet interior is constructed of stainless steel with a unique ducted air flow system. Three (3) heavy duty epoxy coated shelves per section are standard. Mounted on stainless steel pilasters shelves are adjustable in 1" increments. Cabinet walls and doors are insulated with 2-3/8" of environmentally friendly, CFC free, foamed in place polyurethane. Perimeter door heater prevents condensation from forming on the face of the cabinet. An interior LED light is automatically activated when doors are opened. 4" polyolefin, casters (two with brakes) are standard.

Door Construction

Doors are constructed of a high grade stainless steel exterior and interior and are standard with locks. Hoshizaki's exclusive "stepped" design protects the recessed gasket while product is being removed from the cabinet. Doors are provided with a one piece, full length extruded aluminum flush mount handle and are mounted on eight (8) gauge stainless steel hinge plates with a welded hinge pin. Spring assisted self-closing doors are equipped with a stay open feature past 90 degrees. Snap-in magnetic door gaskets are easily removed for cleaning. Door hinging is field reversible.

Refrigeration System

The high efficiency refrigeration system is self-contained with an epoxy electrocoated (E-Coat) evaporator for extended life. Top mounted refrigeration system is easily accessible for service and includes a condenser filter with easy access from the top of the unit. The refrigeration system components are assembled on a high density expanded polypropylene platform that is removable from the main unit. A unique ducted air flow system achieves uniform air distribution within the cabinet to eliminate hot spots. Condensate removal is accomplished with a top mounted energy efficient non-electric evaporation system. A thermostatic expansion valve (TXV) controls the flow of environmentally friendly R290 refrigerant through the evaporator. Refrigeration system utilizes a time initiated heated defrost to eliminate any ice on the evaporator coil. Solid state digital controls monitor the operation and performance of the refrigeration system. The controls also provide visual high and low temperature and high and low voltage alarms. A LED display shows the cabinet temperature and is adjustable to Fahrenheit or Celsius. 115 volt units are equipped with a ten foot cord and plug (20.0 amps or less).

HIGH TEMPERATURE UNDERCOUNTER DISHWASHER / GLASSWASHER

180-UC

High Temperature
Undercounter Dishmachine



FEATURES

- The 2 minute timer includes the built-in, automatic Safe-T-Temp feature, which assures a 180°F sanitizing final rinse, every cycle.
- Top mounted controls are easy to read and simple to operate.
- Large 14-1/2" height clearance accommodates larger dishes, half size sheet pans and tall glassware.
- Patented automatic soil purging system. Filters wash water and traps plate debris in an external drawer. Drawer can be easily removed for dumping contents.
- Upper and lower rotating wash and rinse arms blast water in all directions for optimum cleaning and rinsing.
- All stainless steel construction, no plastic parts to repair.
- Patented built-in booster heater. Economical, single source heat lowers energy costs.
- Low water consumption. Uses only .75 gallons of water per cycle.
- Pumped drain.
- All Stainless Steel wash pump.
- Built in chemical dispensers with top mounted prime switches.
- Built in Delime switch.

CMA MODEL: 180-UC



Universal Pedestal
(24"W X 25-3/8"D X 15-1/4"H)



6" and 4" Stainless Steel Legs

AVAILABLE OPTIONS

- Drain Board
- Water Tempering Kit



48" Undercounter Dishtable

Note: Some US States may require Energy Star ratings for Commercial Dishwashers. The specifier or installer is responsible for knowing their local codes, standards, and regulatory requirements. This product was certified and met the requirements of previous Energy Star Version 2.0 for commercial dishwashers as required by some states.

CMA Energy Mizer® Registered Trademark

NSF c UL us LISTED COMMERCIAL DISHWASHER 864T

CMA Dishmachines 12700 Knott Street Garden Grove, CA 92841 • 800-854-6417 • 714-898-8781 • Fax: 714-895-2141 • www.cmadishmachines.com

CMA reserves the right to modify specifications or discontinue models without prior notification.

© 02-2023 CMA, Inc.

180UC

High Temperature Undercounter Dishwasher / Glasswasher

WARNINGS:

- Plumbing connections must be made by a qualified service company who will comply with all available Federal, State, and Local Health, Plumbing and Safety codes.
- CMA recommends utilizing a water softening system to maintain water hardness measurements of 3.5 gpg (grains per gallon) or less. This will assure maximum results and optimum operation of the dishmachine.

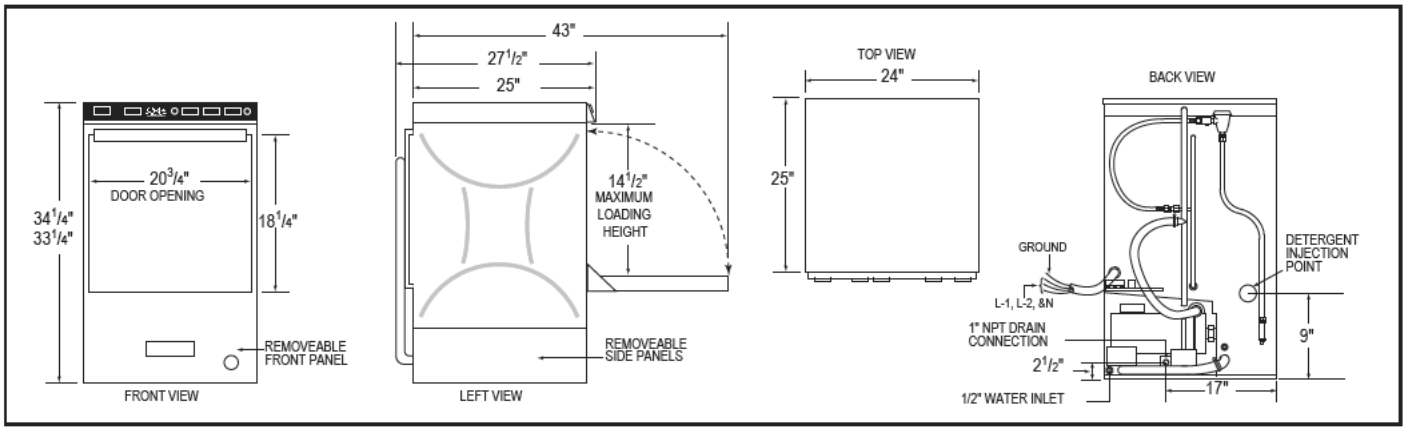

Specifications:

CMA-180UC	USA	(Metric)
WATER CONSUMPTION		
PER RACK	.75 GAL.	(2.84 L)
PER HOUR	22.5 GAL.	(85.2 L)
OPERATING CYCLE		
WASH TIME–SEC	94	94
RINSE TIME–SEC	16	16
DWELL TIME-SEC	10	10
TOTAL CYCLE TIME	2 MIN.	2 MIN.
OPERATING CAPACITY		
RACKS PER HOUR	30	30
WASH TANK CAPACITY	2.5 GAL.	(9.46 L)
PUMP CAPACITY	38 GPM	(144 LPM)
WATER REQUIREMENTS		
REQUIRED MINIMUM TEMP.*	110°F	(43°C)
RECOMMENDED TEMP.**	140°F	(60°C)
WATER INLET	1/2"	(1.27 CM)
DRAIN CONNECTION	1"	(2.54 CM)
RINSE PRESSURE SET	20 ±5PSI	1.41 KG/CM²
CYCLE TEMPERATURES		
WASH-°F	155° F-160° F	(68.3°C/71°C)
RINSE-°F	180° F-195° F	(82°C/90°C)

CMA-180UC	USA	(Metric)
FRAME DIMENSIONS		
DEPTH	25"	(63.5 CM)
WIDTH	24"	(60.96 CM)
HEIGHT	33-1/4"	(84.45 CM)
MAX CLEARANCE FOR WARES	14-1/2"	(36.8 CM)
WASH PUMP MOTOR	1 HP	1 HP
ELECTRICAL RATING	208 VOLTS 1 PH-60 Hz	240 VOLTS 1 PH-60 Hz
TOTAL AMPS	33.0 AMPS	36.0 AMPS
BOOSTER HEATER KW	5.3 KW	7.1 KW
THIS SYSTEM REQUIRES THREE POWER WIRES (SUPPLIED BY CMA) WHICH INCLUDES A CURRENT CARRYING NEUTRAL. AN ADDITIONAL FOURTH WIRE MUST BE PROVIDED FOR MACHINE GROUND. NO GFI BREAKER.		
APPROXIMATE SHIPPING WEIGHT	209#	(94.8 KG)
WITH DISPENSER	215#	(97.5 KG)
SHIPPING DIMENSIONS	PALLET & BOX @ 29" X 28" X 41"	

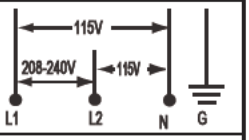

Summary Specifications: CMA-180UC

The CMA Energy Mizer model CMA-180UC undercounter dishmachine provides hot water (180°F) sanitizing through the use of a built-in booster heater. 180°F final rinse safety system ensures proper temperatures in the final rinse by holding wash cycle in run mode until 180°F rinse temperature is detected. The unit comes standard with upper and lower stainless steel wash and final rinse arms, digital LED temperature gauges and easy to operate controls. The CMA-180UC incorporates an automatic soil purging system uniquely designed (patent pending) into the wash tank that enables the wash water to remain clean, assuring excellent results and less chemical use. The CMA-180UC is constructed entirely of stainless steel. Uses standard 20"x20" dishracks and accommodates oversized plates and utensils with 14-1/2" door clearance.

Advisory: CMA does NOT endorse "Tankless On-Demand" water heaters for use on CMA Dishmachine products. CMA DOES endorse, and highly recommends, the standard "tank" style water heaters, sized properly to handle each particular facility with their water heating requirements.

***For machine having "Safe-T-Temp"**
****For faster heat recovery**

CMA Energy MIZER® Registered Trademark

NSF c UL us LISTED COMMERCIAL DISHWASHER 864T

CMA Dishmachines 12700 Knott Street, Garden Grove, CA 92841• 800-854-6417 • 714-898-8781 • Fax: 714-895-2141 • www.cmadishmachines.com

CMA reserves the right to modify specifications or discontinue models without prior notification.

© 02-2023 CMA, Inc.

an Ali Group Company
The Spirit of Excellence

STAINLESS STEEL

SMART SERIES™ UNDERMOUNT SINK BOWLS

SUPER SIZE



Item #: _____ Qty #: _____

Model #: _____

Project #: _____



FEATURES:

One piece seamless **Deep Drawn** stainless steel bowls.
All bowls are supplied with sound deadening pads.
Units feature Advance Tabco's **Smart Finish™**.
Supplied with 3-1/2" drain opening. Drain Not included.

MATERIALS:

Type 304 Series Stainless steel.

OPTIONAL:

K-6 - 3-1/2" Basket Drain Assembly

OEM Bowls welded by others into stainless steel products.
Multiple compartment assemblies available. Call for pricing.

Templates are provided at customer's request

DIMENSIONS and SPECIFICATIONS

TOL ± .125" ALL DIMENSIONS ARE TYPICAL

Model #	Gauge	# Of Bowls	Bowl Size LxWxD	Radius	O.D. Trim Size
1014B-05	20	1	10" x 14" x 5"	2"	12 1/2" x 16 1/2"
1014A-10	20	1	10" x 14" x 10"	2"	12 1/2" x 16 1/2"
1014A-10A	18	1	10" x 14" x 10"	2"	12 1/2" x 16 1/2"
CO-1014A-10RE*	18	1	10" x 14" x 10"	2"	12 1/2" x 16 1/2"
1014-210-BAD	18	2	10" x 14" x 10"	2"	25" x 16 1/2"
1014-310-BAD	18	3	10" x 14" x 10"	2"	37 1/2" x 16 1/2"
CO-1416A-10RE*	18	1	14" x 16" x 10"	3"	16 1/2" x 18 1/2"
1416-212-BAD	18	2	14" x 16" x 12"	3"	33" x 18 1/2"
1416-312-BAD	18	3	14" x 16" x 12"	3"	49 1/2" x 18 1/2"
1620A-10	18	1	16" x 20" x 10"	3"	18 1/2" x 22 1/2"
1620A-12	18	1	16" x 20" x 12"	3"	18 1/2" x 22 1/2"
1620A-14A	14	1	16" x 20" x 14"	3"	18 1/2" x 22 1/2"
1620-212-BAD	18	2	16" x 20" x 12"	3"	37" x 22 1/2"
1620-312-BAD	18	3	16" x 20" x 12"	3"	55 1/2" x 22 1/2"
2020A-12	18	1	20" x 20" x 12"	3"	22 1/2" x 22 1/2"
2020A-14	18	1	20" x 20" x 14"	3"	22 1/2" x 22 1/2"
2028A-12	16	1	20" x 28" x 12"	3"	22 1/2" x 30 1/2"
2028A-14A	14	1	20" x 28" x 14"	3"	22 1/2" x 30 1/2"
2424A-14A	14	1	24" x 24" x 14"	3"	26 1/2" x 26 1/2"

* Includes Residential Finish & Packaging. Add **K-350** for Other Models to Add Residential Finish & Packaging.

SUGGESTED UNDERMOUNT INSTALLATION

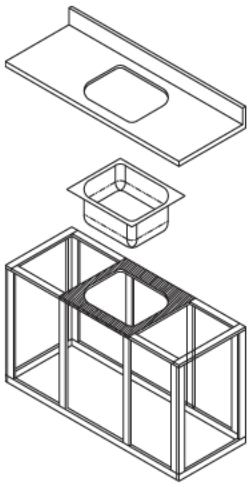

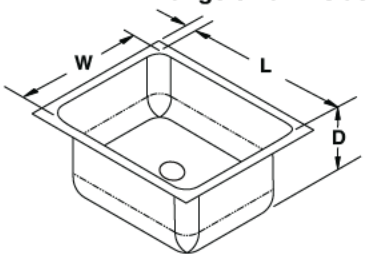

L x W x D = Bowl Size

SUGGESTED COUNTER TOP DETAIL

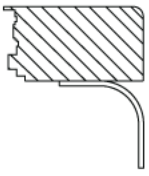

ADVANCE TABCO SMART FABRICATION™ www.advancetabco.com

Customer Service Available To Assist You 1-800-645-3166 8:30 am - 7:00 pm E.S.T.

For Orders & Customer Service:
Email: customer@advancetabco.com or **Fax:** 631-242-6900

For Smart Fabrication™ Quotes:
Email: smartfab@advancetabco.com or **Fax:** 631-586-2933

ADVANCE TABCO is constantly engaged in a program of improving our products. Therefore, we reserve the right to change specifications without prior notice. © ADVANCE TABCO, NOV 2022

CAM #24-0670
Exhibit 1
Page 178 of 288

REF-A

STAINLESS STEEL

SMART SERIES™ UNDERMOUNT SINK BOWLS

SUPER SIZE



Item #: _____ Qty #: _____

Model #: _____

Project #: _____



FEATURES:

One piece seamless **Deep Drawn** stainless steel bowls.
All bowls are supplied with sound deadening pads.
Units feature Advance Tabco's **Smart Finish™**.
Supplied with 3-1/2" drain opening. Drain Not included.

MATERIALS:

Type 304 Series Stainless steel.

OPTIONAL:

K-6 - 3-1/2" Basket Drain Assembly

OEM Bowls welded by others into stainless steel products.
Multiple compartment assemblies available. Call for pricing.

Templates are provided at customer's request

DIMENSIONS and SPECIFICATIONS

TOL ± .125" ALL DIMENSIONS ARE TYPICAL

Model #	Gauge	# Of Bowls	Bowl Size LxWxD	Radius	O.D. Trim Size
1014B-05	20	1	10" x 14" x 5"	2"	12 1/2" x 16 1/2"
1014A-10	20	1	10" x 14" x 10"	2"	12 1/2" x 16 1/2"
1014A-10A	18	1	10" x 14" x 10"	2"	12 1/2" x 16 1/2"
CO-1014A-10RE*	18	1	10" x 14" x 10"	2"	12 1/2" x 16 1/2"
1014-210-BAD	18	2	10" x 14" x 10"	2"	25" x 16 1/2"
1014-310-BAD	18	3	10" x 14" x 10"	2"	37 1/2" x 16 1/2"
CO-1416A-10RE*	18	1	14" x 16" x 10"	3"	16 1/2" x 18 1/2"
1416-212-BAD	18	2	14" x 16" x 12"	3"	33" x 18 1/2"
1416-312-BAD	18	3	14" x 16" x 12"	3"	49 1/2" x 18 1/2"
1620A-10	18	1	16" x 20" x 10"	3"	18 1/2" x 22 1/2"
1620A-12	18	1	16" x 20" x 12"	3"	18 1/2" x 22 1/2"
1620A-14A	14	1	16" x 20" x 14"	3"	18 1/2" x 22 1/2"
1620-212-BAD	18	2	16" x 20" x 12"	3"	37" x 22 1/2"
1620-312-BAD	18	3	16" x 20" x 12"	3"	55 1/2" x 22 1/2"
2020A-12	18	1	20" x 20" x 12"	3"	22 1/2" x 22 1/2"
2020A-14	18	1	20" x 20" x 14"	3"	22 1/2" x 22 1/2"
2028A-12	16	1	20" x 28" x 12"	3"	22 1/2" x 30 1/2"
2028A-14A	14	1	20" x 28" x 14"	3"	22 1/2" x 30 1/2"
2424A-14A	14	1	24" x 24" x 14"	3"	26 1/2" x 26 1/2"

* Includes Residential Finish & Packaging. Add **K-350** for Other Models to Add Residential Finish & Packaging.

SUGGESTED UNDERMOUNT INSTALLATION

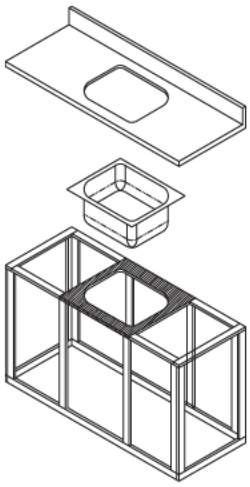

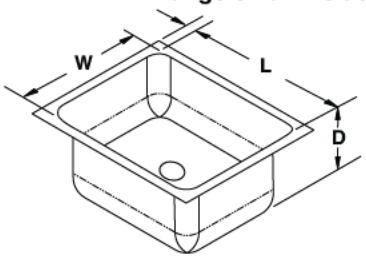

L x W x D = Bowl Size

SUGGESTED COUNTER TOP DETAIL

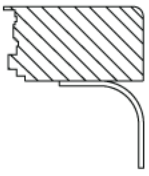

Customer Service Available To Assist You 1-800-645-3166 8:30 am - 7:00 pm E.S.T.

For Orders & Customer Service:
Email: customer@advancetabco.com or **Fax:** 631-242-6900

For Smart Fabrication™ Quotes:
Email: smartfab@advancetabco.com or **Fax:** 631-586-2933

www.advancetabco.com

ADVANCE TABCO is constantly engaged in a program of improving our products. Therefore, we reserve the right to change specifications without prior notice. © ADVANCE TABCO, NOV 2022

Moss & Associates LLC
2101 N. Andrews Avenue
Fort Lauderdale, Florida 33311
P: (954) 524-5678

Project: B372302 Fort Lauderdale Police Headquarters
1300 W Broward Blvd
Fort Lauderdale, Florida 33312

RFI #510: Cafeteria Serving 2002 - Design & Equipment Selection For Cafeteria Buildout

Status	Open		
To	David Lovern (City of Fort Lauderdale) *(Response Required)* Robert Buscemi (City of Fort Lauderdale) Kristin Thompson (City of Fort Lauderdale) Captain Adam Solomon (Fort Lauderdale Police Department)	**From**	Michael Perez-Gurri (Moss & Associates LLC - FLL) 2101 N Andrews Avenue Fort Lauderdale, Florida
Date Initiated	Apr 29, 2024	**Due Date**	May 6, 2024
Location	HQ LEVEL 2>CAFETERIA SERVING 2002	**Project Stage**	
Cost Impact		**Schedule Impact**	
Spec Section		**Cost Code**	
Drawing Number		**Reference**	
Linked Drawings			
Received From	Michael Perez-Gurri (Moss & Associates LLC - FLL)	**Sub Job**	
Copies To	Robert Buscemi (City of Fort Lauderdale), Ambar Escoto Hernandez (AECOM), Matthew Kane (Moss & Associates LLC - FLL), Angel Lopez (Moss & Associates LLC - FLL), Jimmy Lorenzo (Moss & Associates LLC - FLL), David Lovern (City of Fort Lauderdale), Andy McCright (Moss & Associates LLC - FLL), D'von Nottage (Moss & Associates LLC - FLL), Michael Perez-Gurri (Moss & Associates LLC - FLL), Evan Siegel (AECOM), Captain Adam Solomon (Fort Lauderdale Police Department), Kristin Thompson (City of Fort Lauderdale), Yanique Virgo (AECOM), Dylan Wilburn (Moss & Associates LLC - FLL)		
Subcontractor RFI #		**Priority**	Critical

Activity

Question

Question from Michael Perez-Gurri Moss & Associates LLC - FLL *on Monday, Apr 29, 2024 at 01:49 PM EDT*

Moss GMP Assumptions & Clarification (A&C) #13 clarifies that the Cafeteria Kitchen Equipment and Future Kitchen Exhaust Fan System is by The City. Refer to attached GMP A&C excerpt attached.

On 02/20/24 as a means of assistance, Moss provided the City of Fort Lauderdale four (4) Kitchen Equipment Subcontractors contact information so the City may request proposals. Refer to attached emails.

As discussed at the OAC of 03/02/24, The City of Fort Lauderdale requested that Moss provide proposals for the Cafeteria Kitchen Equipment in lieu of the City.

On 03/20/24, Moss submitted to the City of Fort Lauderdale two (2) Kitchen Equipment Subcontractors, Baring Industries, Inc. & Edward Don & Company and requested the City to please review the equipment each bidder is proposing and provide feedback/final selection per piece of equipment required for the Cafeteria in order to level the vendors proposals. In the absence of a Contract Equipment Specification and/or Equipment Schedule for the Cafeteria, vendors are proposing and pricing assumptions based on the Cafeteria Placeholders in the Contract Drawings and relying on Industry Standards & Expertise.

To prevent delays to upcoming roof work in a need to expedite the installation of the associated roof mechanical curbs and roof duct supports, Moss commenced coordinating with Advance Hood Systems, the Kitchen Hood Exhaust Contractor. Not only did the City initially utilize Advance Hood System's preliminary design placeholder for the Kitchen Hood Exhaust System, but Advance Hood Systems was the same Kitchen Hood Vendor that both Baring Industries, Inc. & Edward Don & Company specified in each of their respectful proposals.

Following a Teams Meeting on 04/04/24 with the City of Fort Lauderdale, AECOM & Moss, it was the City's intent to issue a Task Order to AECOM to provide a design for the Cafeteria's Kitchen. AECOM concurrently was finalizing the Kitchen Consultant's Scope of Work and requested from Moss to provide the exact scope of work Moss had coordinated to date with Advance Hoods so AECOM could communicate this to their Kitchen Consultant. Moss provided AECOM Advanced Hood Systems Scope of Work, including all Exclusions, on 04/10/24. Refer to attached emails.

This RFI is being postdated to 03/20/24 when the Baring Industries, Inc. & Edward Don & Company Proposals were submitted to the City of Fort Lauderdale for their review.

Please confirm when a Cafeteria Kitchen Design will be provided with the required Equipment Specification and/or Equipment Schedule required for Moss in order to finalize pricing and coordination for the Cafeteria Serving 2002 Buildout.

Attachments
24.04.29 - RFI-510 Backup - Baring-Edward Bid Leveling Sheet.pdf, 24.04.29 - RFI-510 Backup - AECOM Emails.pdf, 24.04.29 - RFI-510 Backup - City Emails.pdf

Awaiting an Official Response

All Replies

Response from Michael Perez-Gurri Moss & Associates LLC - FLL *on Tuesday, May 7, 2024 at 01:27 PM EDT*

AECOM's RFI-510 Response below dated 05/06/24 at 6:14PM states, "*RFIs are time sensitive documents that are meant to response to technical questions or interpretation of CDs.*"

It is Moss's interpretation to this RFI-510 AECOM Response that since there is a pending Task Order to be issued by the City of Fort Lauderdale to AECOM in order for AECOM to issue a Cafeteria Kitchen Design, this RFI-510 cannot currently be responded to by AECOM because the Cafeteria Kitchen Design is currently not a contact document and/or a scope of work issued by the City of Fort Lauderdale to AECOM.

Therefore, this RFI-510 is being shifted to the City of Fort Lauderdale's court for a response. Moss GMP Assumptions & Clarification (A&C) #13 clarifies that the Cafeteria Kitchen Equipment and Future Kitchen Exhaust Fan System is by The City. The Kitchen Vendor Subcontractor Proposals from Baring Industries, Inc. & Edward Don & Company Proposals were submitted to the City of Fort Lauderdale for their review back on 03/20/24 Please confirm the following:

1) Please confirm if and when a Cafeteria Kitchen Design will be provided with the required Equipment Specification and/or Equipment Schedule required for Moss in order to finalize pricing and coordination for the Cafeteria Serving 2002 Buildout to avoid any potential construction impacts as this work is currently being delayed.

2) If it is confirmed that a Cafeteria Kitchen Design will not be provided per Clarification #1 above, please confirm that Cafeteria Kitchen Construction Buildout may proceed per the Design Placeholders in the Construction Drawings, in lieu of being provided a Cafeteria Kitchen Design with the required/requested Equipment Specification and/or Equipment Schedule so the in-wall and above ceiling MEPF infrastructure may be specifically coordinated to the requirements of the selected equipment.

Response from Yanique Virgo AECOM *on Monday, May 6, 2024 at 06:14 PM EDT*

Please see the attached response

Attachments
2024.05.06_RFI-510 Cafeteria Serving Design & Equipment Status for Buildout_AECOM Response.pdf

Moss & Associates LLC
2101 N. Andrews Avenue
Fort Lauderdale, Florida 33311
P: (954) 524-5678

Project: B372302 Fort Lauderdale Police Headquarters
1300 W Broward Blvd
Fort Lauderdale, Florida 33312

RFI #510: Cafeteria Serving 2002 - Design & Equipment Selection For Cafeteria Buildout

Status	Open		
To	Yanique Virgo (AECOM) *(Response Required)* Robert Buscemi (City of Fort Lauderdale) Kristin Thompson (City of Fort Lauderdale) Evan Siegel (AECOM) David Clemente (City of Fort Lauderdale) *(Response Required)* Captain Adam Solomon (Fort Lauderdale Police Department) Ambar Escoto Hernandez (AECOM)	**From**	Michael Perez-Gurri (Moss & Associates LLC - FLL) 2101 N Andrews Avenue Fort Lauderdale, Florida
Date Initiated	Apr 29, 2024	**Due Date**	May 6, 2024
Location	HQ LEVEL 2>CAFETERIA SERVING 2002	**Project Stage**	
Cost Impact		**Schedule Impact**	
Spec Section		**Cost Code**	
Drawing Number		**Reference**	
Linked Drawings			
Received From	Michael Perez-Gurri (Moss & Associates LLC - FLL)	**Sub Job**	
Copies To	Robert Buscemi (City of Fort Lauderdale), Ambar Escoto Hernandez (AECOM), Matthew Kane (Moss & Associates LLC - FLL), Angel Lopez (Moss & Associates LLC - FLL), Jimmy Lorenzo (Moss & Associates LLC - FLL), David Lovern (City of Fort Lauderdale), Andy McCright (Moss & Associates LLC - FLL), Vanessa Navarrete (Moss & Associates LLC - FLL), D'von Nottage (Moss & Associates LLC - FLL), Michael Perez-Gurri (Moss & Associates LLC - FLL), Evan Siegel (AECOM), Captain Adam Solomon (Fort Lauderdale Police Department), Kristin Thompson (City of Fort Lauderdale), Yanique Virgo (AECOM), Dylan Wilburn (Moss & Associates LLC - FLL)		
Subcontractor RFI #		**Priority**	Critical

Activity

Question

Question from Michael Perez-Gurri Moss & Associates LLC - FLL *on Monday, Apr 29, 2024 at 01:49 PM EDT*

Moss GMP Assumptions & Clarification (A&C) #13 clarifies that the Cafeteria Kitchen Equipment and Future Kitchen Exhaust Fan System is by The City. Refer to attached GMP A&C excerpt attached.

On 02/20/24 as a means of assistance, Moss provided the City of Fort Lauderdale four (4) Kitchen Equipment Subcontractors contact information so the City may request proposals. Refer to attached emails.

As discussed at the OAC of 03/02/24, The City of Fort Lauderdale requested that Moss provide proposals for the Cafeteria Kitchen Equipment in lieu of the City.

On 03/20/24, Moss submitted to the City of Fort Lauderdale two (2) Kitchen Equipment Subcontractors, Baring Industries, Inc. & Edward Don & Company and requested the City to please review the equipment each bidder is proposing and provide feedback/final selection per piece of equipment required for the Cafeteria in order to level the vendors proposals. In the absence of a Contract Equipment Specification and/or Equipment Schedule for the Cafeteria, vendors are proposing and pricing assumptions based on the Cafeteria Placeholders in the Contract Drawings and relying on Industry Standards & Expertise.

To prevent delays to upcoming roof work in a need to expedite the installation of the associated roof mechanical curbs and roof duct supports, Moss commenced coordinating with Advance Hood Systems, the Kitchen Hood Exhaust Contractor. Not only did the City initially utilize Advance Hood System's preliminary design placeholder for the Kitchen Hood Exhaust System, but Advance Hood Systems was the same Kitchen Hood Vendor that both Baring Industries, Inc. & Edward Don & Company specified in each of their respectful proposals.

Following a Teams Meeting on 04/04/24 with the City of Fort Lauderdale, AECOM & Moss, it was the City's intent to issue a Task Order to AECOM to provide a design for the Cafeteria's Kitchen. AECOM concurrently was finalizing the Kitchen Consultant's Scope of Work and requested from Moss to provide the exact scope of work Moss had coordinated to date with Advance Hoods so AECOM could communicate this to their Kitchen Consultant. Moss provided AECOM Advanced Hood Systems Scope of Work, including all Exclusions, on 04/10/24. Refer to attached emails.

This RFI is being postdated to 03/20/24 when the Baring Industries, Inc. & Edward Don & Company Proposals were submitted to the City of Fort Lauderdale for their review.

Please confirm when a Cafeteria Kitchen Design will be provided with the required Equipment Specification and/or Equipment Schedule required for Moss in order to finalize pricing and coordination for the Cafeteria Serving 2002 Buildout.

Attachments
24.04.29 - RFI-510 Backup - Baring-Edward Bid Leveling Sheet.pdf, 24.04.29 - RFI-510 Backup - AECOM Emails.pdf, 24.04.29 - RFI-510 Backup - City Emails.pdf

Awaiting an Official Response

A/E Response:
RFIs are time sensitive documents that are meant to respond to technical questions or interpretation of CDs

Activity

Question

Question from Brandon Rodriguez Thunder Electrical Contractors, Inc. *on Tuesday, Apr 30, 2024 at 10:54 AM EDT*

As it relates to RFI-510, this RFI is in reference to Cafeteria Serving 2002 Kitchen Hood Exhaust & Makeup Air, specifically the Rooftop Exhaust Fan & Makeup Air Unit located on the HQ Roof Level 4 Area B referencing the attached Advance Hood Systems Shop Drawing. Please confirm the following:

1) The Electrical Drawings do not contain any electrical information for the kitchen.
hood mechanical equipment reflected on the Advance Hood Systesm Shop Drawings. Please provide the following information:

a. Electrical Panel and Circuit Designation.
b. Conduit Diameter.
c. Wire Gauge.
d. Breaker Size.
e. Safety Switch/Disconnect Type and Size, if applicable.

2) Confirm if the Rooftop Exhaust Fan & Makeup Air Unit need to have communication capabilities in order to be monitored by the Building Managment System (BMS).

3) Confirm if the Sequence of Operations is locally restricted to the Kitchen Hood Control Panel as noted on the "*Scope Of Work*" on Page #1 of the attached Advance Hood Systems Shop Drawing.

Attachments
24.04.04 - Advance Hood Systems - Cafeteria Kitchen Hood Exhasut System SD.pdf, RFI #074 - Advanced Hood Systems - Exhaust.pdf

Awaiting an Official Response

All Replies

Response from Michael Perez-Gurri Moss & Associates LLC - FLL *on Tuesday, May 28, 2024 at 09:50 AM EDT*

This response is correcting a typo/misspell from Moss's RFI Response below dated 05/24/24 at 2:43PM. The following sentence should read, "*And the reason AECOM **cannot** respond to this RFI is because they are pending a Task Order from the City of Fort Lauderdale to incorporate Advance Hoods Kitchen Advance Hoods Kitchen Hood Rooftop Exhaust Fan & Makeup Air Unit Design into AECOM's Overall HQ Design.*"

Response from Michael Perez-Gurri Moss & Associates LLC - FLL *on Friday, May 24, 2024 at 02:43 PM EDT*

Advance Hoods has provided all the information for their Kitchen Hood Rooftop Exhaust Fan & Makeup Air Unit Electrical & Communication requirement per their submitted shop drawing. The electrical and communication clarifications submitted in this RFI are more related to how Advance Hoods Kitchen Hood Rooftop Exhaust Fan & Makeup Air Unit Design are going to be integrated into the overall Electrical & Communicaiton Design of the Construction Permit Set per AECOM HQ Design. And the reason AECOM can respond to this RFI is because they are pending a Task Order from the City of Fort Lauderdale to incorporate Advance Hoods Kitchen Advance Hoods Kitchen Hood Rooftop Exhaust Fan & Makeup Air Unit Design into AECOM's Overall HQ Design. Therefore, until the City successfully issues a Task Order to AECOM so they can start coordinating Advance Hoods Kitchen Hood Design into AECOM's Overall HQ Design so they can respond to this RFI-515, this RFI-515 will remain in City's Court for tracking purposes.

Response from David Lovern City of Fort Lauderdale *on Friday, May 24, 2024 at 01:49 PM EDT*

Advance Hood Systems should be providing you with this information.

Response from Michael Perez-Gurri Moss & Associates LLC - FLL *on Friday, May 10, 2024 at 10:56 AM EDT*

AECOM's RFI-515.1 Response to the requested electrical and communication clarifications regarding the Kitchen Hood Rooftop Exhaust Fan & Makeup Air Unit states, "*The design of the cafeteria is not currently in the design teams contract. Pending authorization from the client to proceed.*" Therefore, RFI-515 has now been placed in the City's court for confirmation when the design of the cafeteria will be issued to the design teams contract. Refer to attached Moss Email to the City of Fort Lauderdale dated 05/10/24.

Attachments
24.05.10 - Moss RFI-515.1 Response Email To City.pdf

Response from Yanique Virgo AECOM *on Thursday, May 9, 2024 at 07:58 PM EDT*

Please see the attached response

Attachments
2024.05.09_RFI-515-Cafeteria_Servicing_2002-Advance_Hood_Systems-Kitchen_Hood_AECOM Response.pdf

Moss & Associates LLC
2101 N. Andrews Avenue
Fort Lauderdale, Florida 33311
P: (954) 524-5678

Project: B372302 Fort Lauderdale Police Headquarters
1300 W Broward Blvd
Fort Lauderdale, Florida 33312

RFI #515: Cafeteria Servicing 2002 - Advance Hood Systems - Kitchen Hood Rooftop Exhaust Fan & Makeup Air Unit Electrical & Communication Clarifications

Status	Open		
To	Yanique Virgo (AECOM) *(Response Required)* Evan Siegel (AECOM) Ambar Escoto Hernandez (AECOM)	**From**	Brandon Rodriguez (Thunder Electrical Contractors, Inc.)
Date Initiated	May 2, 2024	**Due Date**	May 9, 2024
Location	HQ ROOF	**Project Stage**	
Cost Impact	Yes (Unknown)	**Schedule Impact**	
Spec Section		**Cost Code**	
Drawing Number		**Reference**	
Linked Drawings			
Received From	Brandon Rodriguez (Thunder Electrical Contractors, Inc.)	**Sub Job**	
Copies To	Robert Buscemi (City of Fort Lauderdale), Ambar Escoto Hernandez (AECOM), Anthony Greg Fajardo (City of Fort Lauderdale), Matthew Kane (Moss & Associates LLC - FLL), Angel Lopez (Moss & Associates LLC - FLL), David Lovern (City of Fort Lauderdale), Michael Perez-Gurri (Moss & Associates LLC - FLL), Evan Siegel (AECOM), Captain Adam Solomon (Fort Lauderdale Police Department), Kristin Thompson (City of Fort Lauderdale), Yanique Virgo (AECOM), Dylan Wilburn (Moss & Associates LLC - FLL)		
Subcontractor RFI #	74.0	**Priority**	Critical

Activity

Question

Question from Brandon Rodriguez Thunder Electrical Contractors, Inc. *on Tuesday, Apr 30, 2024 at 10:54 AM EDT*

As it relates to RFI-510, this RFI is in reference to Cafeteria Serving 2002 Kitchen Hood Exhaust & Makeup Air, specifically the Rooftop Exhaust Fan & Makeup Air Unit located on the HQ Roof Level 4 Area B referencing the attached Advance Hood Systems Shop Drawing. Please confirm the following:

1) The Electrical Drawings do not contain any electrical information for the kitchen.
hood mechanical equipment reflected on the Advance Hood Systesm Shop Drawings. Please provide the following information:

a. Electrical Panel and Circuit Designation.
b. Conduit Diameter.
c. Wire Gauge.
d. Breaker Size.
e. Safety Switch/Disconnect Type and Size, if applicable.

2) Confirm if the Rooftop Exhaust Fan & Makeup Air Unit need to have communication capabilities in order to be monitored by the Building Managment System (BMS).

3) Confirm if the Sequence of Operations is locally restricted to the Kitchen Hood Control Panel as noted on the "*Scope Of Work*" on Page #1 of the attached Advance Hood Systems Shop Drawing.

Attachments
24.04.04 - Advance Hood Systems - Cafeteria Kitchen Hood Exhasut System SD.pdf, RFI #074 - Advanced Hood Systems - Exhaust.pdf

Awaiting an Official Response

A/E Response:
The design of the cafeteria is not currently in the design teams contract. Pending authorization from the client to proceed.

THUNDER

RFI#074

Date: 4/30/24

To: Moss

Ref: Fort Lauderdale Police Department

Subj: Advanced Hood Systems Exhaust

This RFI is in reference to Advanced Hood Systems, specifically the exhaust system located on level 4A Roof. The electrical drawings do not contain any electrical information for the kitchen hood mechanical equipment reflected on the AHS Shop drawings. Please provide the following information:

1. Electrical panel and circuit designation
2. Conduit diameter
3. Wire gauge
4. Breaker size
5. Safety Switch/Disconnect type and size, if needed

Thank you for your time and prompt response.

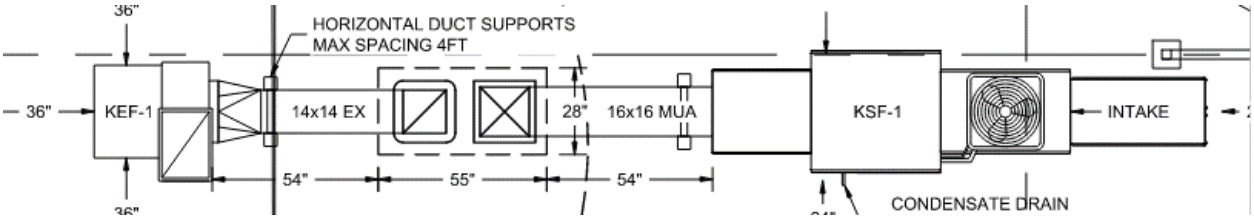

DEPARTMENT OF SUSTAINABLE DEVELOPMENT
BUILDING DIVISION
APPROVED 8/16/2023
BLD-CNC-22070004
CITY OF FORT LAUDERDALE

Project Management Initials:
Designer: Designer Checked: Checker Approved: Approver ARCH D 24" X 36"

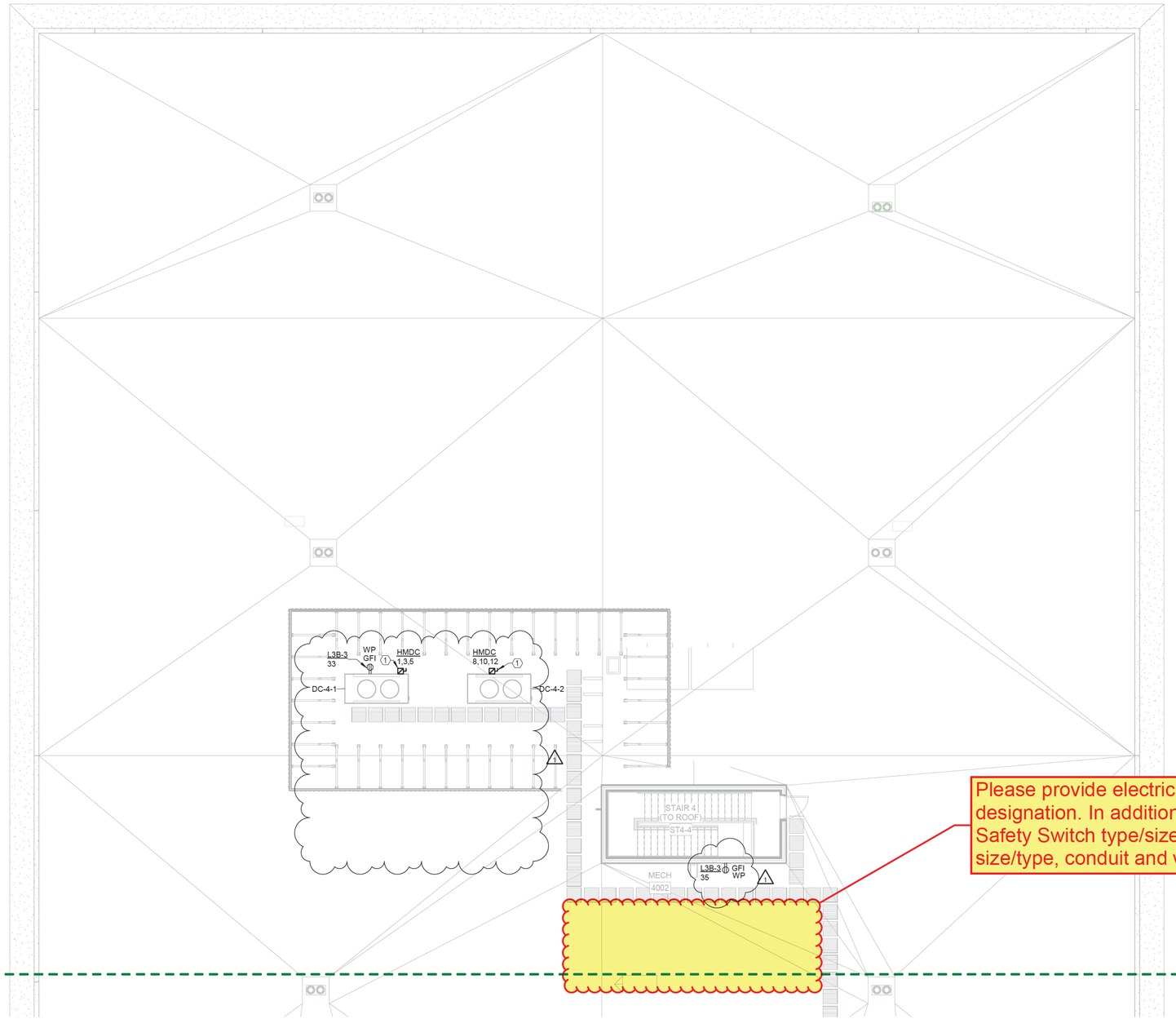

1 HQ BLDG - POWER FLOOR PLAN ROOF - AREA A
Scale: 1/8" = 1'-0"

KEYED NOTES

TAG	DESCRIPTION
1	DATA CENTER CONDENSER: 460V, 3PH, 6.6 FLA. PROVIDE A 30A, 3-POLE, 600V, NEMA 3R NONFUSE DISCONNECT. ROUTE FEEDER ALONGSIDE MECHANICAL PIPING TO DATA CENTER. COORDINATE EXACT LOCATION AND ADDITIONAL REQUIREMENTS WITH MECHANICAL CONTRACTOR.

SCALE: 1/8" = 1'-0" 0 2' 4' 8' 16' 24'

N

Last Plotted: 2/3/2023 4:50:35 PM
Filename: BIM 360://BP-AMER (USA) 60639620-FLPH_HQ_ELEC_R20.rvt

Printed on ___% Post-Consumer Recycled Content Paper

©2016 AECOM Corporation

PLANS ARE EXEMPT FROM PUBLIC DISCLOSURE PURSUANT TO F.S. 119.071(3)(b)1

AECOM

PROJECT

FORT LAUDERDALE POLICE HEADQUARTERS

1300 W BROWARD BLVD, FT LAUDERDALE, FL 33312

CLIENT

CITY OF FORT LAUDERDALE DEPARTMENT OF PUBLIC WORKS

PRIME CONSULTANT

AECOM
2 ALHAMBRA PLAZA, SUITE 900
CORAL GABLES, FL 33134
305.444.4691 tel 305.675.3843 fax
http://www.aecom.com
ARCHITECTURE: LICENSE NO. AA26000687
ENGINEERING: CA LIC. NO. 8115

CONSULTANTS

STRUCTURAL
THORNTON TOMASETTI
101 NE THIRD AVENUE, SUITE 1170
FORT LAUDERDALE, FL 33301
954.903.9300 tel 954.903.9301 fax
www.thorntontomasetti.com/

PLUMBING & FIRE PROTECTION
HAMMOND & ASSOCIATES, INC
499 N.W. 70TH AVENUE, SUITE 201
PLANTATION, FL 33317
954.327.7111 tel 954.337.7154 fax
www.hammondengineers.com

CIVIL & TRAFFIC
KEITH
2312 S. ANDREWS AVE
FORT LAUDERDALE, FL 33316
954.788.3400 tel 000.000.0000 fax
www.keithteam.com

REGISTRATION

ARLENE PARKER PROFESSIONAL ENGINEER LICENSE PE71150 STATE OF FLORIDA

THIS ITEM HAS BEEN DIGITALLY SIGNED AND SEALED BY ARLENE PARKER, PROFESSIONAL ENGINEER, STATE OF FLORIDA, LICENSE NO. 71150 ON THE DATE INDICATED HERE. PRINTED COPIES OF THIS DOCUMENT ARE NOT CONSIDERED SIGNED AND SEALED AND THE SIGNATURE MUST BE VERIFIED ON ANY ELECTRONIC COPIES

Moss
Received
08/21/2023

ISSUE/REVISION

I/R	DATE	DESCRIPTION
1	JAN 27, 2023	SI-001
	JUNE 10, 2022	PERMIT SET

KEY PLAN

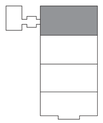

PROJECT NUMBER

60639620

SHEET TITLE

HEADQUARTERS BLDG - POWER FLOOR PLAN ROOF - AREA A

SHEET NUMBER

HQ-E2-2-4A

EXHAUST FAN INFORMATION - JOB#6544961

FAN UNIT NO	TAG	QTY	FAN UNIT MODEL #	MANUFACTURER	CFM	ESP	RPM	MOTOR ENCL	HP	BHP	PHASE	VOLT	FLA	DISCHARGE VELOCITY	WEIGHT (LBS)	SONES
1	KEF-1	1	AH-USBI18DD-RM	ADVANCED HOOD	2200	1.750	1223	ODP,PREMIUM	1.500	1.0300	3	208	6.6	1128 FPM	416	17.8

FAN #1 AH-USBI18DD-RM - EXHAUST FAN (KEF-1)

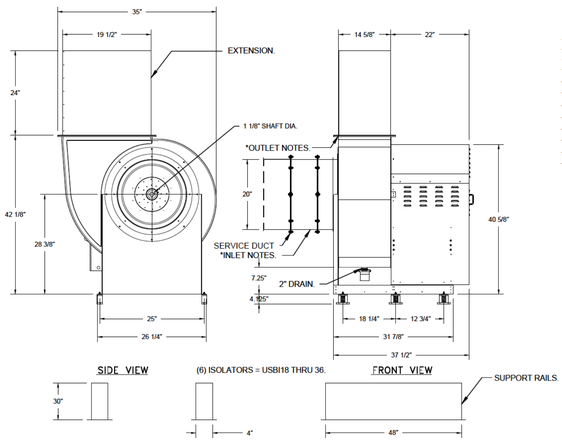

FEATURES:

- ROOF MOUNTED FANS.
- UL705.
- UL762 AND ULC-S645 (RESTAURANT MODEL).
- HIGH HEAT OPERATION DIRECT DRIVE 350°F (176°C).
- HEAT SLINGER.
- NEMA 3R SAFETY DISCONNECT SWITCH.
- GREASE CLASSIFICATION TESTING.
- 2" DRAIN.
- MOTOR WEATHER COVER.
- FULLY SEALED SCROLL HOUSING.
- SCROLL ACCESS DOOR.
- FLANGE 1 1/4".

OPTIONS

- BI18 - INLET SERVICE DUCT CONNECTION. USED TO CONNECT TO STANDARD 20" GREASE DUCT OR FIELD WELDED DUCT. INCLUDES (2) 7" RISERS BOLTED TO STANDARD INLET RISER.
- UTILITY SET GREASE CUP.
- BI18 - 24" DISCHARGE EXTENSION.
- BI - DISCHARGE ORIENTATION VERTICAL UPPER LEFT - CW INLET SIDE.
- BI18 - INLET CONNECTION STANDARD 20" FLANGED GREASE DUCT.
- UTILITY SET - SPRING VIBRATION ISOLATORS - BI18 / EQUIVALENT SIZED UTILITY SET - INDOOR/OUTDOOR USE.
- 2 YEAR PARTS WARRANTY.

MIAMI-DADE COUNTY - RAIL INSTALLATION GUIDE

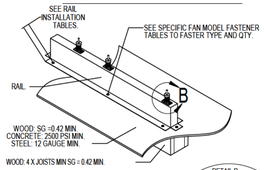

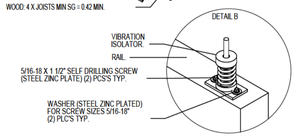

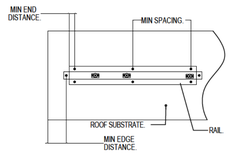

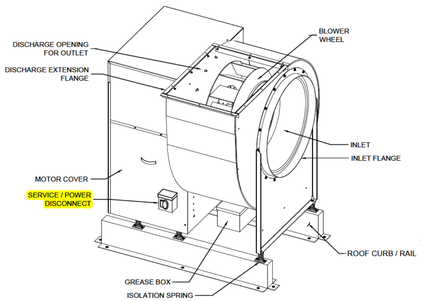

UTILITY SET EXHAUST FAN DETAIL

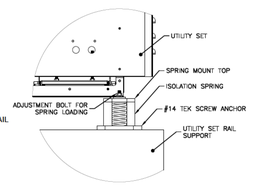

VIBRATION ISOLATION DETAIL

MIAMI-DADE NOA2 BI UTILITY SET

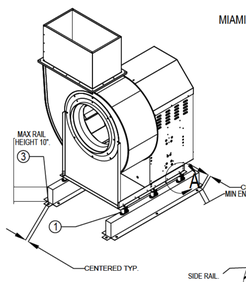

GENERAL NOTES:

1. THIS APPROVAL IS FOR THE STRUCTURAL CAPACITY AND IMPACT RATING OF THE EXTERIOR HOUSING ONLY, IT DOES NOT INCLUDE ANY INTERIOR MECHANISM OR ELECTRICAL PART.
2. THESE FANS HAVE NOT BEEN WIND TESTED FOR WIND DRIVEN RAIN TEST PER FLORIDA BUILDING CODE, TAS100 (A)-95.
3. TESTED IN ACCORDANCE TO FLORIDA BUILDING CODE TEST PROTOCOL TAS201, TAS202, TAS203.
4. TESTED FOR AREAS INCLUDING HIGH VELOCITY HURRICANE ZONES.
5. TESTED UNDER MIAMI-DADE COUNTY NOTIFICATION NUMBER ATI-08034.

INSTALLATION INSTRUCTIONS:
1. LOCATE VIBRATION ISOLATORS AS NEEDED ON THE RAIL CENTER ON THE RAIL AND SECURE WITH 5/16-18 X 1 1/2" SELF DRILLING SCREWS AND APPROPRIATE SIZED WASHERS ALL HARDWARE SHOULD BE STEEL ZINC PLATED.

2. THE VIBRATION ISOLATOR IS BOLTED TO THE FAN PER THE INSTRUCTION GUIDE SUPPLIED WITH THE ISOLATOR.

3. SECURE RAIL TO ROOF FRAMING MEMBERS BY DRILLING 1/4" DIA PILOT HOLES IN THE RAIL FLANGE AT LOCATIONS SHOWN IN THE DIAGRAM. SEE TABLE BELOW FOR FASTENER TYPE AND QTY.

DESIGN PRESSURE: +112.5 / -112.5 PSF
LARGE MISSILE IMPACT RESISTANT

INSTALLATION FASTENER TYPES

	WOOD (SG = 0.42 MIN.)	STEEL (12 GAUGE MIN.)	CONCRETE (2500 PSI MIN. CRACKED CONCRETE)
FASTENER	3/8" DIA. ZINC PLATED LAG BOLT	1/4"-14 DRIL-FLEX SELF DRILLING SCREW	3/8" DIA. SS HILTI KWIK BOLT TZ EXPANSION ANCHOR
MINIMUM THREAD PENETRATION	2-5/16"	12 GAUGE	2-5/16
MINIMUM EDGE DISTANCE	1-1/2"	3/8"	3"
MINIMUM END DISTANCE	2-5/8"	3/8"	4"
MINIMUM SPACING	1-1/2"	3/4"	7"

INSTALLATION FASTENER QTY

	WOOD			STEEL			CONCRETE		
FAN MODEL	LONG SIDE	SHORT SIDE	TOTAL	LONG SIDE	SHORT SIDE	TOTAL	LONG SIDE	SHORT SIDE	TOTAL
BI18	3	1	8	2	1	6	2	1	6

MIAMI-DADE NOA2 A-SERIES SUPPLY FANS

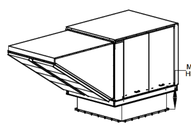

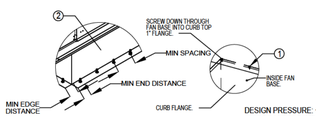

General Notes:

1. This approval is for the structural capacity and impact rating of the exterior housing only; it does not include any interior mechanism or electrical part.
2. These fans have not been wind tested for Wind Driven Rain Test per Florida Building Code, TAS100 (A)-95.
3. Tested in accordance to Florida Building Code test protocol TAS201, TAS202, TAS203.
4. Tested for areas including high velocity hurricane zones.
5. Tested under Miami-Dade County Notification number ATI-08034.

Installation Instructions:
1. SECURE FAN BASE TO TOP OF CURB USING 1/4-14 X 1" ZINC PLATED STEEL SELF DRILLING SCREWS (A307 OR BETTER) THROUGH FAN BASE. SEE TABLE BELOW FOR QTY.

2. SECURE CURB TO ROOF FRAMING MEMBERS BY DRILLING 1/4" DIA PILOT HOLES IN CURB AT LOCATION SHOWN IN BOTTOM LEFT DIAGRAM. SEE TABLE BELOW FOR FASTENER TYPE AND QTY.

DESIGN PRESSURE: +30.0 / -130.0 PSF
LARGE MISSILE IMPACT RESISTANT

INSTALLATION FASTENER TYPES

	Fan To Curb	Wood (SG = 0.42 Min.)	Steel (12 Gauge Min.)	Concrete (2500 psi Min. Cracked Concrete)
Fastener	1/4"-14 x 1" Self Drilling Screw (A307 OR BETTER)	3/8" Dia. Zinc Plated Lag Bolt	1/4"-14 Dril-Flex Self Drilling Screw	3/8" Dia. SS Hilti Kwik Bolt TZ Expansion Anchor
Minimum Thread Penetration	N/A	2"	12 Gauge	2-5/16"
Minimum Edge Distance	N/A	1-1/2"	3/8"	3"
Minimum End Distance	N/A	2-5/8"	3/8"	4"
Minimum Spacing	N/A	1-1/2"	3/4"	7"

INSTALLATION FASTENER QTY

	Curb to Fan			Wood			Steel			Concrete		
Fan Model	Long Side	Short Side	Total	Long Side	Short Side	Total	Long Side	Per Side	Total	Long Side	Short Side	Total
A1	2	2	8	4	3	14	4	3	14	3	2	10

MUA FAN INFORMATION - JOB#6544961

FAN UNIT NO	TAG	QTY	FAN UNIT MODEL #	BLOWER	HOUSING	MIN CFM	DESIGN CFM	ESP	RPM	MOTOR ENCL	HP	BHP	PHASE	VOLT	FLA	MCA	MOCP	WEIGHT (LBS)	SONES
2	KSF-1	1	AH-A1-15D-MPU	15MF-1-MOD	A1	1100	1760	0.500	1739	ODP,PREMIUM	1.500	0.8360	3	208	4.4	5.5A	15A	958	21.6

COILS - JOB#6544961

FAN UNIT NO	TAG	COIL TYPE	DESIGN CFM	COOLING									
				ENTERING DB TEMP	ENTERING WB TEMP	LEAVING DB TEMP	LEAVING WB TEMP	ENTERING FLUID TEMP	LEAVING FLUID TEMP	FLUID FLOW RATE	PERCENT GLYCOL	TOTAL CAPACITY	SENSIBLE CAPACITY	LATENT CAPACITY
2	KSF-1	DX	1760	91.0°F	78.0°F	80.8°F	73.0°F	---	---	---	---	36.0 MBH	19.1 MBH	16.9 MBH

CONDENSER DETAILS

FAN UNIT NO	TAG	FAN UNIT MODEL #	CONDENSER NO	TONNAGE	VOLTAGE	PHASE	FREQUENCY	MCA	RLA	MAX FUSE SIZE	MIN WIRE SIZE	SEER
2	KSF-1	AH-A1-15D-MPU	1	3	208-230	3 PHASE	60 HZ	14.5 AMPS	11.9 AMPS	20 AMPS	14 AWG	14

FAN #2 AH-A1-15D-MPU - SUPPLY FAN (KSF-1)
1. SUPPLY UNIT WITH 15" MIXED FLOW DIRECT DRIVE FAN IN SIZE #1 HOUSING.
2. INTAKE HOOD WITH EZ FILTERS.
3. SIDE DISCHARGE - AIR FLOW RIGHT -> LEFT.
4. MIAMI DADE IMPACT AND WIND LOAD CERTIFICATION +30 / -130 PSF - MIAMI DADE COUNTY PRODUCT CONTROL APPROVED. FLORIDA BUILDING CODE APPROVAL. ROOF MOUNT EXHAUST CURBS UP TO 20" HIGH MUST BE 18 GAUGE ALUMINIZED.
5. SUPPORT SHELL FOR SIZE 1 MODULAR PACKAGE UNIT. INCLUDES CONTROL VESTIBULE. INCLUDES CONDENSER SUPPORTS. DOES NOT INCLUDE RETURN AIR OR INLET AIR DAMPER.
6. 3 TON, SINGLE CIRCUIT MODULAR PACKAGED COOLING OPTION FOR SIZE 1 MODULAR PACKAGED UNIT INCLUDES CONDENSER, DX COIL, FILTER/DRYER KIT, THERMAL EXPANSION VALVE, R410A REFRIGERANT, AND REFRIGERANT PIPING. (1,100 TO 1,800 CFM) WHEN ORDERED WITH OPPOSITE AIRFLOW CONDENSERS ACCESS AND COIL PIPING WILL REMAIN IN STANDARD POSITION. DRAIN AND SLEDS WILL MOVE TO THE OPPOSITE SIDE. ANY OTHER CHANGE WILL REQUIRE CLI. CONDENSERS REQUIRE SEPARATE 208V, 3 PHASE POWER SUPPLY UNLESS ORDERED WITH SINGLE POINT CONNECTION. COIL = 2EJ2100N.
7. INSULATED BLOWER HOUSING SIZES 1-2 COMMERCIAL MODULAR.
8. CONTROL PACKAGE FOR MOD PACKAGE UNIT COOLING ONLY UNIT. INCLUDES AIRFLOW PROVING SWITCH, RTULINK-ACHP BOARD AND TERMINAL BLOCKS.
9. LOCKING CAPS FOR SINGLE CONDENSER UNITS. CONSISTS OF 2 LOCKING CAPS, PART# NCP-4, AND 1 KEY, PART# NC-KEY.
10. SEPARATE 120VAC WIRING PACKAGE FOR MAKE-UP AIR UNITS. OPTION MUST BE SELECTED WHEN MOUNTING VFD IN PREWIRE PANEL OR WITH DCV PACKAGE. PROVIDES SEPARATE 120VAC INPUT TO SUPPLY FAN. THIS 120V SIGNAL MUST BE RUN BY ELECTRICIAN FROM DCV TO MUA SWITCH.
11. HINGED DOUBLE WALL INSULATED DOOR ASSEMBLY (BURNER/BLOWER/MPU SECTION).
12. 2 YEAR PARTS WARRANTY.

*NOTE: SUPPLY DUCT MUST BE INSTALLED TO MEET SMACNA STANDARDS. A MINIMUM STRAIGHT DUCT LENGTH MUST BE MAINTAINED DOWNSTREAM OF UNIT DISCHARGE AS OUTLINED IN AMCA PUBLICATION 201. WHEN USING RECTANGULAR DUCTWORK, ELBOWS MUST BE RADIUS THROAT, RADIUS BACK WITH TURNING VANES. FLEXIBLE DUCTWORK AND SQUARE THROAT/SQUARE BACK ELBOWS SHOULD NOT BE USED. ANY TRANSITION AND/OR TURNS IN THE DUCTWORK WILL CAUSE SYSTEM EFFECT. SYSTEM EFFECT WILL DRASTICALLY INCREASE STATIC PRESSURE AND REDUCE AIRFLOW. DO NOT RELY ON UNIT TO SUPPORT DUCT IN ANY WAY. FAILURE TO PROPERLY SIZE DUCTWORK MAY CAUSE SYSTEM EFFECTS AND REDUCE PERFORMANCE OF THE EQUIPMENT. SUGGESTED STRAIGHT DUCT SIZE IS 20" x 20"

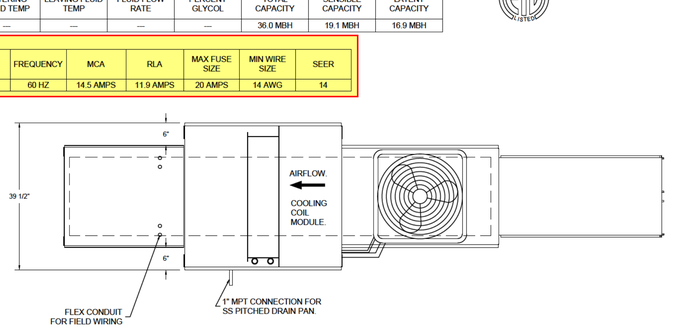

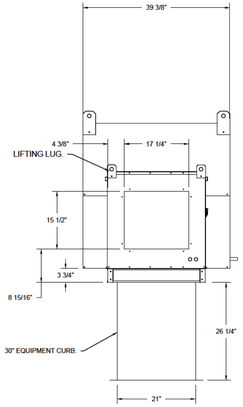

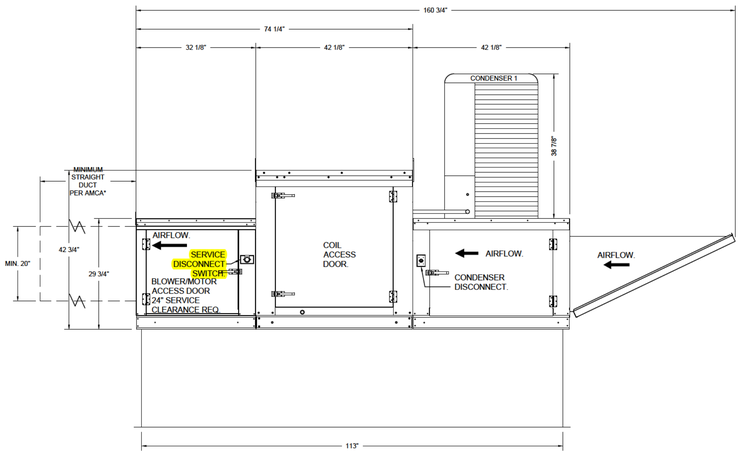

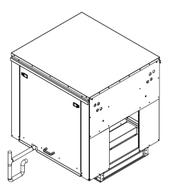

TYPICAL CONDENSATE DRAIN DETAIL

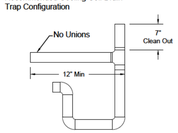

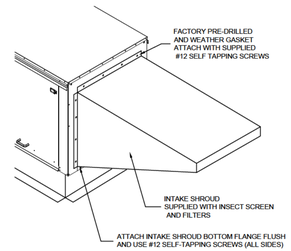

FILTERED INTAKE SHROUD DETAIL

Miami-Dade NOA

1. This approval is for the structural capacity and impact rating of the exterior housing only; it does not include any interior mechanisms or electrical part.
2. These fans have not been wind tested for Wind Driven Rain Test per Florida Building Code, TAS100 (A)-95.
3. Tested in accordance to Florida Building Code test protocol TAS201, TAS202, TAS203.
4. Tested for areas including high velocity hurricane zones.
5. Tested under Miami-Dade County Notification number ATI-08034.
6. No cables or strapping is required.
7. NOA2 - NOA# 18-0118.11 (RENEWAL NO# 21-0318.10) EXPIRES 03/ 04/ 2024

DESIGN PRESSURE: +30.0 / -130.0 PSF LARGE MISSILE IMPACT RESISTANT

VENTILATION EQUIPMENT DETAILS

NOT TO SCALE

INSTALLATION SHALL COMPLY WITH: NFPA 96 FBC-M - SMACNA ASHRAE - AMCA

HOOD PLAN
SHEET: H-2

WHEN DIGITALLY SIGNED
Printed copies of this document are not considered signed and sealed and the signature must be verified only with the electronic copies.

RODNEY L. FRITZ, P.E.
AIR FLOW CONSULTANTS, LLC
FL. LICENSE # PE 50003
8474 SW 42 CT
DAVIE, FL 33328
PHONE: 954-541-4592
EMAIL: rfritz@airflowconsult.com

CAPTIVE AIRE HOODS ARE BUILT IN COMPLIANCE WITH

NFPA #96
NFPA #17A
NSF

UL710 STANDARDS
ETL LISTED 3054804-001

FOR QUESTIONS

PLEASE CONTACT
ADVANCED HOOD SYSTEMS
12250 WILES ROAD
CORAL SPRINGS, FL 33076
PHONE: (954) 551-9370 or (954) 937-0296
REG140@CAPTIVEAIRE.COM
STATE LIC# CSC1110285

RODNEY L FRITZ LICENSE No. 0050003 STATE OF FLORIDA PROFESSIONAL ENGINEER

DATE:_____

ADVANCED HOOD SYSTEMS

JOB	FORT LAUDERDALE POLICE HEADQUARTERS		
LOCATION	1300 W. BROWARD BLVD., FT. LAUDERDALE, FL		
DATE	4/4/24	JOB #	6544961
DWG #	1696	DRAWN BY	TMH
REV.		SCALE	NTS

CAM #24-0670
Exhibit 1

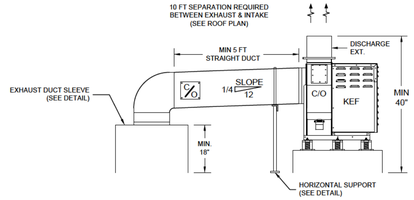

WELDED DUCT & FAN DETAIL

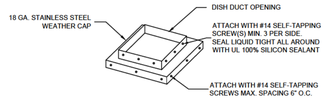

MUA SLEEVE DETAIL

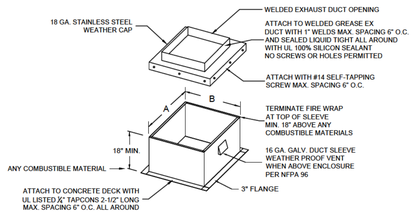

WELDED EX DUCT SLEEVE DETAIL

FBC TABLE 1522.3 ROOF MOUNTED EQUIPMENT HEIGHT REQUIREMENTS	
WIDTH OF MECHANICAL UNIT (inches)	MINIMUM CLEARANCE ABOVE SURFACE (inches)
< 24	14
25 < 36	18
37 < 48	24
49 < 60	30
61 AND WIDER	48

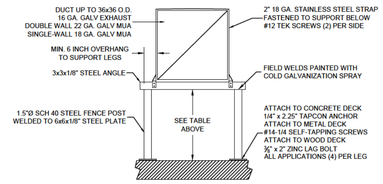

NOTE: ONE SUPPORT EVERY 4 FT OF DUCT

HORIZONTAL DUCT SUPPORT

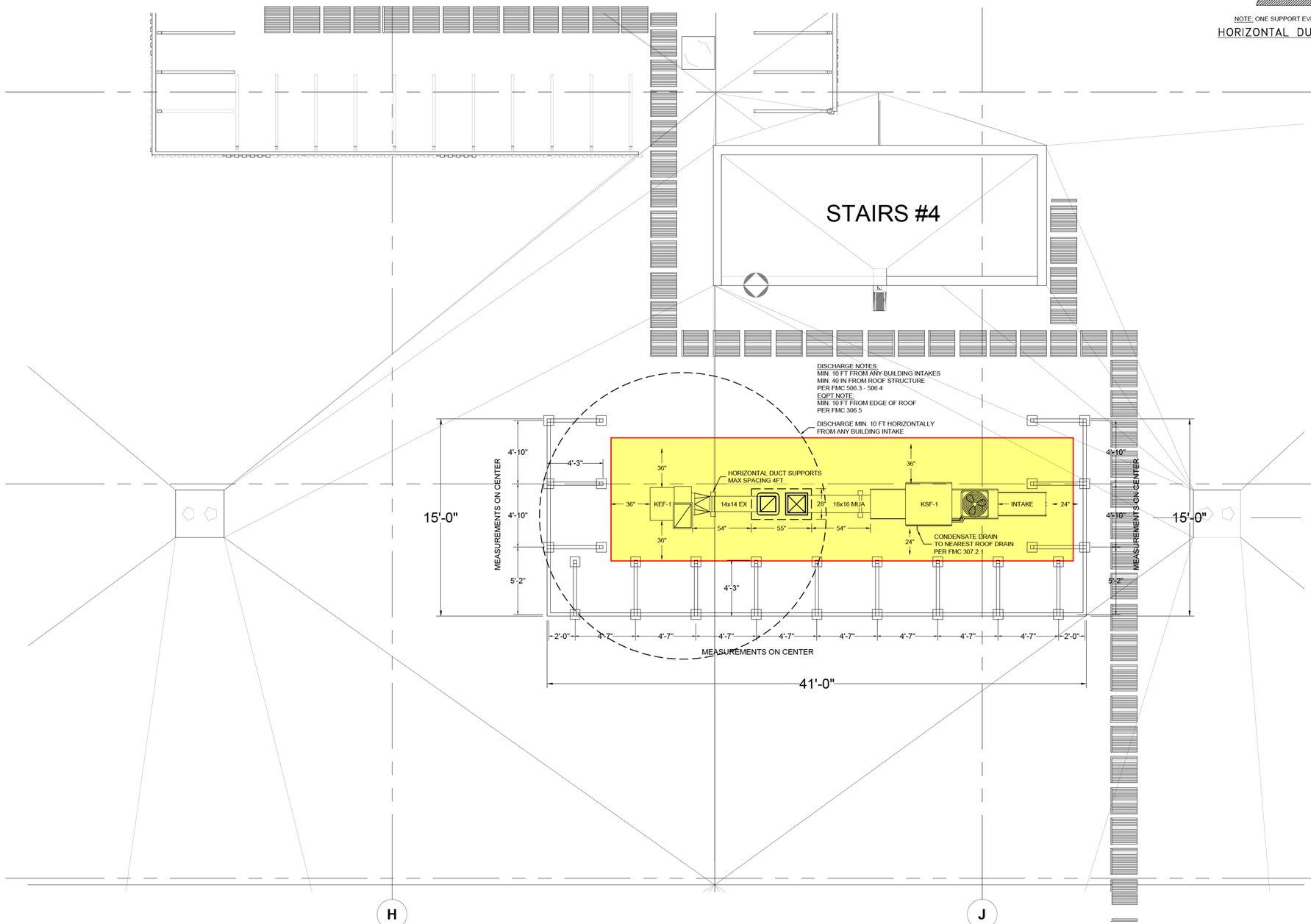

ROOF PLAN – KITCHEN VENTILATION 3RD LEVEL

SCALE: ⅛" = 1' - 0"

GRAPHIC SCALE

0 FEET 2 4 6 8

INSTALLATION SHALL COMPLY WITH: NFPA 96 FBC-M – SMACNA ASHRAE – AMCA

HOOD PLAN

SHEET: H-5

ROOF TOP EQUIPMENT SERVICE:

EQUIPMENT AND APPLIANCES ON ROOFS OR ELEVATED STRUCTURES SHALL COMPLY WITH FMC 306.5

WHERE EQUIPMENT REQUIRING ACCESS ARE LOCATED ON AN ELEVATED STRUCTURE OR ROOF OF A BUILDING SUCH THAT PERSONNEL WILL HAVE TO CLIMB HIGHER THAN 16 FEET ABOVE GRADE TO ACCESS SUCH EQUIPMENT AN INTERIOR OR EXTERIOR MEANS OF ACCESS SHALL BE PROVIDED PER FMC.

SUCH ACCESS SHALL NOT REQUIRE CLIMBING OVER OBSTRUCTIONS GREATER THAN 30 INCHES IN HEIGHT OR WALKING ON ROOFS HAVING A SLOPE GREATER THAN FOUR UNITS VERTICAL IN TWELVE UNITS HORIZONTAL.

ROOF TOP TERMINATIONS FOR TYPE I HOODS:

ROOF TOP EXHAUST TERMINATIONS SHALL DISCHARGE A MINIMUM OF 10 FEET HORIZONTAL FROM ANY BUILDING INTAKES, OPERABLE DOORS OR WINDOWS PER NFPA 96 - 7.8.2. WHERE 10 FEET HORIZONTAL SEPARATION IS NOT POSSIBLE THE EXHAUST FAN DISCHARGE SHALL BE A MINIMUM OF 3 FEET VERTICALLY ABOVE ANY BUILDING INTAKES.

EXHAUST SHALL DISCHARGE A MINIMUM OF 10 FEET FROM PROPERTY LINE PER FMC 501.2.1.

ROOF MOUNTED EQUIPMENT REQUIRING SERVICE SHALL BE INSTALLED A MINIMUM OF 10 FEET FROM ANY EDGE WITHOUT A MINIMUM PARAPET OF 42" HIGH FOR SAFE ACCESS DURING MAINTENANCE / SERVICE PER FMC 306.5. OR A 42" HIGH SAFETY RAILING SHALL BE PROVIDED PER FMC 304.11.

ROOF TOP GREASE EXHAUST SHALL DISCHARGE A MINIMUM OF 40" ABOVE ROOF STRUCTURE AND ABOVE ANY PARAPET WALL OR PARTS OF A BUILDING STRUCTURE, OR A MINIMUM OF 10 FEET HORIZONTAL CLEARANCE FROM SUCH STRUCTURE, OR A MINIMUM OF 5 FEET FROM SUCH STRUCTURE IF IT DISCHARGES AWAY FROM SUCH STRUCTURE PER FMC 506.3.13.1 AND DISCHARGE WILL NOT IMPINGE ON THE ROOF, OTHER EQUIPMENT OR APPLIANCES OR PARTS OF STRUCTURE PER FMC 506.5.3

EXHAUST EQUIPMENT SERVING TYPE I HOODS SHALL BE MINIMUM 2 FEET FROM PARAPET-TYPE BUILDING STRUCTURE PROVIDED THAT SUCH STRUCTURE ARE NOT HIGHER THAN THE TOP OF THE FAN DISCHARGE OPENING PER FMC 506.5.6.

MAKE-UP AIR INTAKES:

401.4 INTAKE OPENING LOCATION

AIR INTAKE OPENINGS SHALL COMPLY WITH ALL OF THE FOLLOWING:

1. INTAKE OPENINGS SHALL BE LOCATED NOT LESS THAN 10 FEET FROM LOT LINES OR BUILDINGS ON THE SAME LOT.

MECHANICAL AIR INTAKE OPENINGS SHALL BE LOCATED NOT LESS THAN 10 FEET HORIZONTALLY FROM ANY HAZARDOUS OR NOXIOUS CONTAMINANT SOURCE, SUCH AS VENTS, STREETS, ALLEYS, PARKING LOTS AND LOADING DOCKS, EXCEPT AS SPECIFIED IN ITEM 3 OR SECTION 501.3.1. SUCH INTAKES ARE LOCATED NOT LESS THAN 25 FEET VERTICALLY ABOVE SUCH LOCATIONS.

2. INTAKE OPENINGS SHALL BE LOCATED NOT LESS THAN 3 FEET BELOW CONTAMINANT SOURCES WHERE SUCH SOURCES ARE LOCATED WITHIN 10 FEET OF THE OPENING.

INTAKE OPENINGS ON STRUCTURES IN FLOOD HAZARD AREAS SHALL BE AT OR ABOVE THE ELEVATION REQUIRED BY SECTION 1612 OF THE FBC.

401.5 INTAKE OPENING PROTECTION

AIR INTAKE OPENINGS THAT TERMINATE OUTDOORS SHALL BE PROTECTED WITH CORROSION-RESISTANT SCREENS, LOUVERS OR GRILLES.

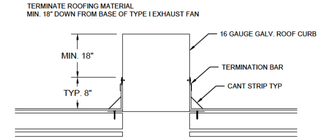

EX CURB ROOFING MATERIAL DETAIL

WHEN DIGITALLY SIGNED
Printed copies of this document are not considered signed and sealed and the signature must be verified only with the electronic copies.

RODNEY L. FRITZ, P.E.
AIR FLOW CONSULTANTS, LLC
FL. LICENSE # PE 50003
8474 SW 42 CT
DAVIE, FL 33328
PHONE: 954-541-4592
EMAIL: rfritz@airflowconsult.com

CAPTIVE AIRE HOODS ARE BUILT IN COMPLIANCE WITH

NFPA #96
NFPA #17A
NSF

UL710 STANDARDS
ETL LISTED 3054804-001

FOR QUESTIONS

PLEASE CONTACT
ADVANCED HOOD SYSTEMS
12250 WILES ROAD
CORAL SPRINGS, FL 33076
PHONE: (954) 551-9370 or (954) 937-0296
REG140@CAPTIVEAIRE.COM
STATE LIC# CSC1110285

RODNEY L FRITZ LICENSE No. 0050003 STATE OF FLORIDA PROFESSIONAL ENGINEER

DATE:_____

ADVANCED HOOD SYSTEMS

JOB	FORT LAUDERDALE POLICE HEADQUARTERS		
LOCATION	1300 W. BROWARD BLVD., FT. LAUDERDALE, FL		
DATE	4/4/24	JOB #	6544961
DWG #	1696	DRAWN BY	TMH
REV.		SCALE	CAM 24-0670 Exhibit "D"

HOOD INFORMATION - JOB#6544961

HOOD NO	TAG	MODEL	MANUFACTURER	LENGTH	MAX COOKING TEMP	TYPE	APPLIANCE DUTY	DESIGN CFM/FT	TOTAL EXH CFM	EXHAUST PLENUM RISER(S)						TOTAL SUPPLY CFM	HOOD CONSTRUCTION	HOOD CONFIG	
										WIDTH	LENG	HEIGHT	DIA	CFM	VEL	SP		END TO END	ROW
1	H-1	5424 AH-ND-2-PSP-F	ADVANCED HOOD	11' 0"	600 DEG	I	HEAVY	200	2200	10"	20"	4"		2200	1584	-0.500"	1760	430 SS WHERE EXPOSED	ALONE	ALONE

HOOD INFORMATION

HOOD NO	TAG	FILTER(S)					LIGHT(S)			UTILITY CABINET(S)					FIRE SYSTEM PIPING	HOOD HANGING WEIGHT
		TYPE	QTY	HEIGHT	LENGTH	EFFICIENCY @ 7 MICRONS	QTY	TYPE	WIRE GUARD	LOCATION	SIZE	FIRE SYSTEM		ELECTRICAL	SWITCHES	
												TYPE	SIZE	MODEL #	QUANTITY	
1	H-1	SS BAFFLE WITH HANDLES	8	20"	16"	30%	7	L55 SERIES E26	NO	LEFT	12"x54"x24"	TANK FS	4.0/4.0	SC-311110MA	1 LIGHT 1 FAN	YES	1093 LBS

HOOD OPTIONS

HOOD NO	TAG	OPTION
1	H-1	FIELD WRAPPER 18.00" HIGH FRONT, LEFT, RIGHT.
		BACKSPLASH 122.00" HIGH X 180.00" LONG 430 SS VERTICAL.
		RISER SENSOR INSTALL 6IN PLEN.
		RIGHT WIDE VERTICAL END PANEL 42" TOP WIDTH, 36" BOTTOM WIDTH, 80" HIGH INSULATED 430 SS.
		LEFT WIDE VERTICAL END PANEL 42" TOP WIDTH, 36" BOTTOM WIDTH, 80" HIGH INSULATED 430 SS.

PERFORATED SUPPLY PLENUM(S)

HOOD NO	TAG	POS	LENGTH	WIDTH	HEIGHT	TYPE	RISER(S)				
							WIDTH	LENG	DIA	CFM	SP
1	H-1	Front	144"	14"	6"	MUA	12"	20"		586	0.186"
						MUA	12"	20"		586	0.186"
						MUA	12"	20"		586	0.186"

ND-2 Series with PSP Specification

The model ND-2 with PSP Accessory is a compensating canopy hood rated for all types of cooking equipment. The hood shall have the size, shape and performance specified on drawings.

The hood shall be listed for 450°F cooking surfaces at 150 CFM/ft, 600°F cooking surfaces at 200 CFM/ft, and 700°F cooking surfaces at 250 CFM/ft. The hood shall be ETL Listed as "Exhaust Hood Without Exhaust Damper".

KLEEN-GARD Filter Specification

RESEARCH PRODUCTS CORPORATION

NAFA & IKECA ASSOCIATIONS
RP CORP. FILTERS ARE BUILT IN COMPLIANCE WITH:
NFPA #96
NSF STANDARD #2
UL STANDARD #1046
INT. MECH. CODE (IMC)

CLEANABLE SURFACE UNDER KITCHEN HOOD PER NFPA 96

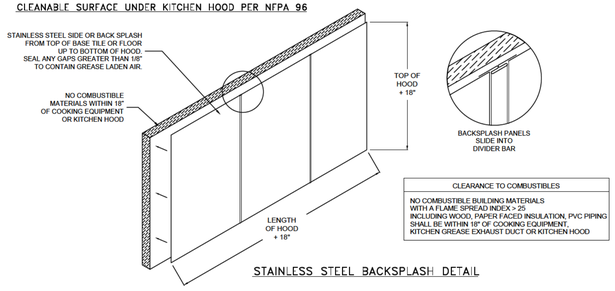

CLEARANCE TO COMBUSTIBLES

NO COMBUSTIBLE BUILDING MATERIALS WITH A FLAME SPREAD INDEX > 25 INCLUDING WOOD. PAPER FACED INSULATION, PVC PIPING SHALL BE WITHIN 18" OF COOKING EQUIPMENT, KITCHEN GREASE EXHAUST DUCT OR KITCHEN HOOD

STAINLESS STEEL BACKSPLASH DETAIL

AIR BALANCE NOTE:

TOTAL HOOD EXHAUST = 2,200 CFM
TOTAL HOOD SUPPLY = 1,760 CFM
TOTAL NET DIFFERENCE = 440 CFM

HVAC SYSTEM TO PROVIDE A MINIMUM 440 CFM OF OUTSIDE AIR FOR BALANCED BUILDING PRESSURE

KITCHEN SHALL BE NEGATIVE WITH RESPECT TO ADJACENT AREAS NOT TO EXCEED -0.02" W.C.

SCOPE OF WORK:

FURNISH AND INSTALL (1) UL710 TYPE I GREASE HOOD SYSTEM TO COMPLY WITH EIGHTH EDITION OF FLORIDA BUILDING CODE, FIRE PREVENTION, FMC 2023, AND 2021 NFPA 96, NFPA 17A, NFPA 70, NEC.

FURNISH AND INSTALL CORRESPONDING UL1978 GREASE EXHAUST DUCT OR FIELD WELDED 16 GA. GALV. AND 24 GA. GALV. MAKE-UP AIR DUCT PER PLANS TO COMPLY WITH SMACNA, ASHRAE, AMCA, IECC.

FURNISH AND INSTALL TWO LAYERS OF ASTM E2336 FIRE WRAP ON ALL GREASE DUCT PER MFGR. SPECIFICATIONS

FURNISH AND INSTALL CLEAN OUT DOORS IN GREASE DUCT AS REQUIRED PER PLAN

FURNISH AND INSTALL NEW ROOF CURB FOR (1) EXHAUST FAN AND (1) SUPPLY FAN ONTO THIRD-STORY CONCRETE ROOF. ROOFING REPAIRS BY OTHERS.

FURNISH CONTROL PANEL FOR TYPE I HOOD SEQUENCE OF OPERATION TO E.C. FOR HOOK-UP

PROVIDE CERTIFIED AABC OR NEBB TEST AND BALANCE REPORT PRIOR TO FINAL INSPECTION. DEMONSTRATE HOOD PERFORMANCE OR INTEGRITY OF TYPE I HOOD EXHAUST DUCT UPON REQUEST OF AHJ. TYPE I HOOD EXHAUST DUCT SHALL BE INSTALLED WITHOUT LEAKS AND LIQUID TIGHT. TESTING SHALL BE DONE WITH LIGHT SOURCE DURING INSTALLATION TO ENSURE THERE ARE NO HOLES OR LEAKS. SMOKE TEST CAN BE USED.

BY OTHERS: NOTED ITEMS SUCH AS ELECTRICAL SCHEMATICS, FIELD WIRING, GAS VALVES, GAS LINES, ROOM TEMP OR HOOD SENSORS, SHUNT BREAKERS, LIGHTING, POWER TO FANS, INTERCONNECTIONS, SHALL BE DONE BY CORRESPONDING TRADE INCLUDING PLUMBING, ELECTRICAL, LOW-VOLTAGE, FIRE ALARM. K-CLASS AND MULTI-HAZ FIRE EXTINGUISHERS PER NFPA 10 BY OWNER.

PERMIT, HOOK-UP, AND TEST OF FIRE SUPPRESSION SYSTEM BY OTHERS UNDER SEPARATE PERMIT BY THE LICENSE COMPANY PERFORMING THE CERTIFIED INSTALLATION

GENERAL NOTES TYPE I HOOD:

MICRO SWITCH PROVIDED FOR ELECTRICAL INTERFACE. UPON SYSTEM DISCHARGE THE FOLLOWING MUST OCCUR:
-EXHAUST AIR CONTINUES TO RUN, SUPPLY AIR SHUTS DOWN.
-ALARM (IF AVAILABLE) OR HORN STROBE MUST ANNUNCIATE.
-ALL GAS AND ELECTRIC SUPPLY TO ALL APPLIANCES AND OUTLETS WITHIN HAZARD MUST SHUT DOWN.

ALL SYSTEM PARTS TO BE APPROVED MANUFACTURER'S COMPONENTS AND INSTALLED IN COMPLIANCE WITH MANUFACTURER'S UL LISTING.

AUTOMATIC GAS SHUT-OFF VALVE TO BE LOCATED IN A SERVICEABLE POSITION NOT IN HAZARD AND OUTSIDE OF HOOD FOOT PRINT.

SUPPLY AND EXHAUST FANS ARE INTERLOCKED WITH PILOT LIGHT AND SHALL AUTO START WITH THE DETECTION OF HEAT SOURCE PER FBC (M) 507.1.1.1

NO COMBUSTIBLE BUILDING MATERIALS SHALL BE WITHIN 18" OF COOKING EQUIPMENT, TYPE I KITCHEN HOOD AND CORRESPONDING EXHAUST DUCT.

TYPE I HOOD CLEARANCE NOTES:

THE KITCHEN HOOD SHALL MAINTAIN CLEARANCE FROM LIMITED-COMBUSTIBLES AND COMBUSTIBLE MATERIALS. INSTALLATION SHALL BE DONE IN COMPLIANCE WITH THE LATEST EDITION OF NFPA 96 AND LOCAL CODES BY THE AHJ.

NO COMBUSTIBLE BUILDING MATERIALS SUCH AS WOOD, PVC, FRP, PAPER-FACED INSULATION, OR ANY PRODUCT WITH A FLAME SPREAD INDEX GREATER THAN 25 SHALL BE WITHIN 18 INCHES OF COOKING EQUIPMENT OR TYPE I HOOD AND ITS EXHAUST DUCT.

NO LIMITED-COMBUSTIBLE MATERIALS SUCH AS GYPSUM BOARD, ROCK WOOL BATTING, ROOF INSULATION BOARD, OR ANY PRODUCT CONTAINING LESS THAN 10% MATERIAL WITH A FLAME SPREAD INDEX GREATER THAN 25 SHALL BE WITHIN 3 INCHES OF COOKING EQUIPMENT OR TYPE I HOOD AND ITS EXHAUST DUCT.

TYPE I HOOD AND RELATED COMPONENTS ARE INSTALLED IN COMPLIANCE WITH FBC-M SECTIONS 506, 507, 508, 509.1

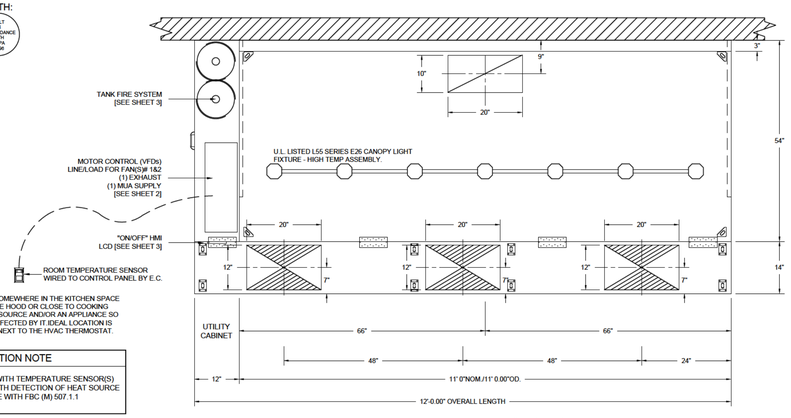

INSTALL ON WALL OR CEILING SOMEWHERE IN THE KITCHEN SPACE BUT NOT DIRECTLY NEAR THE HOOD OR CLOSE TO COOKING EQUIPMENT AWAY FROM HEAT SOURCE AND/OR AN APPLIANCE SO THAT THE READING IS NOT AFFECTED BY IT. IDEAL LOCATION IS UNDER AN HVAC RETURN OR NEXT TO THE HVAC THERMOSTAT.

OPERATION NOTE

HOOD(S) ARE PROVIDED WITH TEMPERATURE SENSOR(S) AND SHALL AUTO START WITH DETECTION OF HEAT SOURCE IN ACCORDANCE WITH FBC (M) 507.1.1

PLAN VIEW – HOOD #1 (H-1)
11' 0.00" LONG 5424AH-ND-2-PSP-F

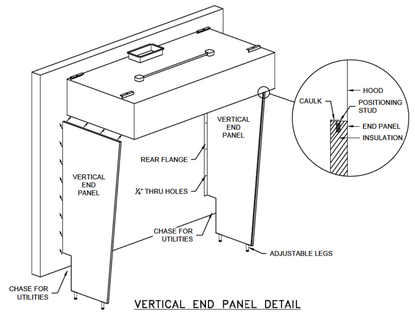

VERTICAL END PANEL DETAIL

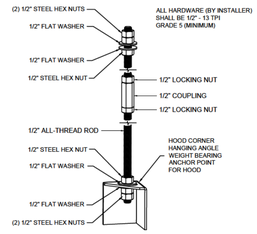

CORNER HANGING DETAIL

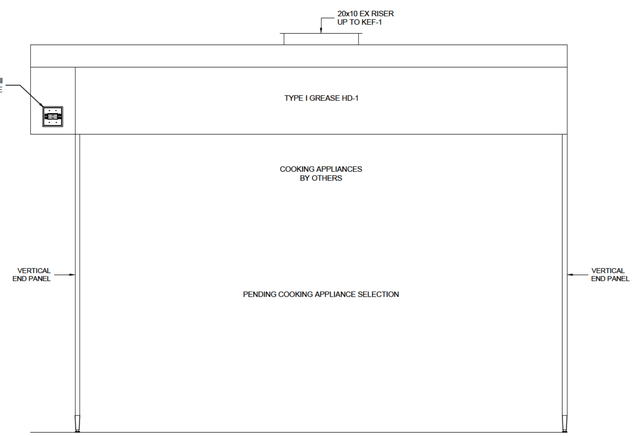

KITCHEN HOOD SHALL OVERHANG COOKING EQUIPMENT BY A MINIMUM OF 6" ON ALL OPEN SIDES

ELEVATION VIEW – HOOD #1 (H-1)
11' 0.00" LONG 5424AH-ND-2-PSP-F

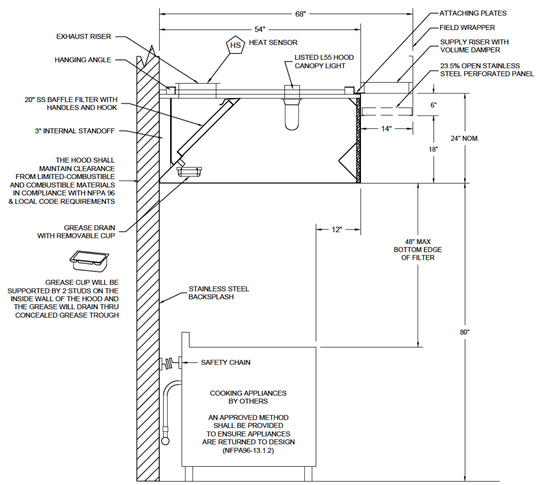

KITCHEN HOOD SHALL OVERHANG COOKING EQUIPMENT BY A MINIMUM OF 6" ON ALL OPEN SIDES

SECTION VIEW – HOOD #1 (H-1)
11' 0.00" LONG 5424AH-ND-2-PSP-F

NOTE:
UL300 FIRE SYSTEM
UNDER SEPARATE PERMIT
BY LICENSED CONTRACTOR

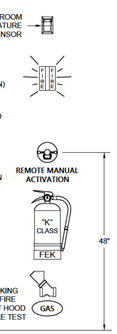

K-CLASS EXTINGUISHER MAXIMUM 30 FEET FROM HAZARD

PROVIDE A PLACARD CONSPICUOUSLY PLACED NEAR "K" CLASS FIRE EXTINGUISHER:
"THE FIRE PROTECTION SYSTEM SHALL BE ACTIVATED PRIOR TO USING THE FIRE EXTINGUISHER"

FEK PER NFPA 10

NOTE: UL300 FIRE SYSTEM
UNDER SEPARATE DRAWING / PERMIT

KITCHEN HOOD DETAILS

NOT TO SCALE

INSTALLATION SHALL COMPLY WITH: NFPA 96 FBC-M – SMACNA ASHRAE – AMCA

HOOD PLAN
SHEET: H-1

WHEN DIGITALLY SIGNED
Printed copies of this document are not considered signed and sealed and the signature must be verified only with the electronic copies.

RODNEY L. FRITZ, P.E.
AIR FLOW CONSULTANTS, LLC
FL. LICENSE # PE 50003
8474 SW 42 CT.
DAVIE, FL 33328
PHONE: 954-541-4592
EMAIL: rfritz@airflowconsult.com

CAPTIVE AIRE HOODS ARE BUILT IN COMPLIANCE WITH

NFPA #96
NFPA #17A
NSF

UL710 STANDARDS
ETL LISTED 3054804-001

FOR QUESTIONS

PLEASE CONTACT
ADVANCED HOOD SYSTEMS
12250 WILES ROAD
CORAL SPRINGS, FL 33076
PHONE: (954) 551-9370 or (954) 937-0296
REG140@CAPTIVEAIRE.COM
STATE LIC# CSC1110285

RODNEY L FRITZ LICENSE No. 0050003 STATE OF FLORIDA PROFESSIONAL ENGINEER

DATE:_____

ADVANCED HOOD SYSTEMS

JOB	FORT LAUDERDALE POLICE HEADQUARTERS		
LOCATION	1300 W. BROWARD BLVD., FT. LAUDERDALE, FL		
DATE	4/4/24	JOB #	6544961
DWG #	1696	DRAWN BY	TMH
REV.		SCALE	NTS

CAM #24-0670
Exhibit 1
Page 193 of 288

EXHAUST FAN INFORMATION - JOB#6544961

FAN UNIT NO	TAG	QTY	FAN UNIT MODEL #	MANUFACTURER	CFM	ESP	RPM	MOTOR ENCL	HP	BHP	PHASE	VOLT	FLA	DISCHARGE VELOCITY	WEIGHT (LBS)	SONES
1	KEF-1	1	AH-USBI18DD-RM	ADVANCED HOOD	2200	1.750	1223	ODP,PREMIUM	1.500	1.0300	3	208	6.6	1128 FPM	416	17.8

FAN #1 AH-USBI18DD-RM - EXHAUST FAN (KEF-1)

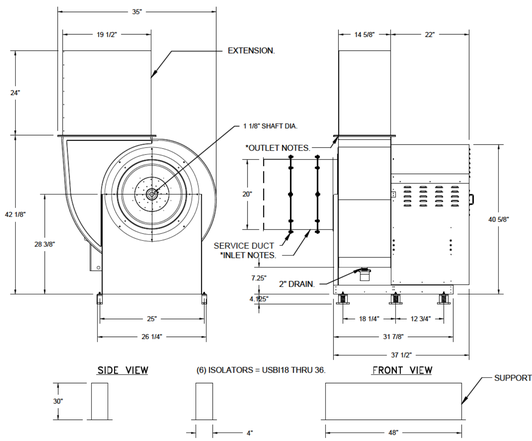

FEATURES:

- ROOF MOUNTED FANS.
- UL705.
- UL762 AND ULC-S645 (RESTAURANT MODEL).
- HIGH HEAT OPERATION DIRECT DRIVE 350°F (176°C).
- HEAT SLINGER.
- NEMA 3R SAFETY DISCONNECT SWITCH.
- GREASE CLASSIFICATION TESTING.
- 2" DRAIN.
- MOTOR WEATHER COVER.
- FULLY SEALED SCROLL HOUSING.
- SCROLL ACCESS DOOR.
- FLANGE 1 1/4".

OPTIONS

- BI18 - INLET SERVICE DUCT CONNECTION. USED TO CONNECT TO STANDARD 20" GREASE DUCT OR FIELD WELDED DUCT. INCLUDES (2) 7" RISERS BOLTED TO STANDARD INLET RISER.
- UTILITY SET GREASE CUP.
- BI18 - 24" DISCHARGE EXTENSION.
- BI - DISCHARGE ORIENTATION VERTICAL UPPER LEFT - CW INLET SIDE.
- BI18 - INLET CONNECTION STANDARD 20" FLANGED GREASE DUCT.
- UTILITY SET - SPRING VIBRATION ISOLATORS - BI18 / EQUIVALENT SIZED UTILITY SET - INDOOR/OUTDOOR USE.
- 2 YEAR PARTS WARRANTY.

MIAMI-DADE COUNTY - RAIL INSTALLATION GUIDE

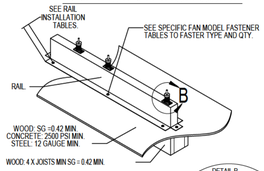

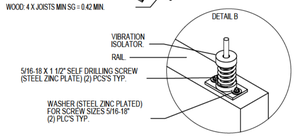

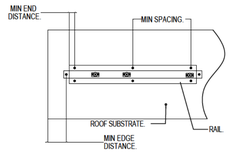

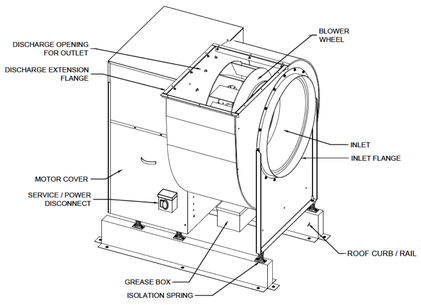

UTILITY SET EXHAUST FAN DETAIL

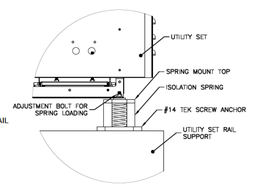

VIBRATION ISOLATION DETAIL

MIAMI-DADE NOA2 BI UTILITY SET

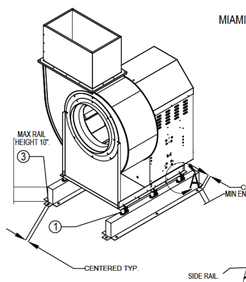

GENERAL NOTES:

1. THIS APPROVAL IS FOR THE STRUCTURAL CAPACITY AND IMPACT RATING OF THE EXTERIOR HOUSING ONLY, IT DOES NOT INCLUDE ANY INTERIOR MECHANISM OR ELECTRICAL PART.
2. THESE FANS HAVE NOT BEEN WIND TESTED FOR WIND DRIVEN RAIN TEST PER FLORIDA BUILDING CODE, TAS100 (A)-95.
3. TESTED IN ACCORDANCE TO FLORIDA BUILDING CODE TEST PROTOCOL TAS201, TAS202, TAS203.
4. TESTED FOR AREAS INCLUDING HIGH VELOCITY HURRICANE ZONES.
5. TESTED UNDER MIAMI-DADE COUNTY NOTIFICATION NUMBER ATI-08034.

INSTALLATION INSTRUCTIONS:
1. LOCATE VIBRATION ISOLATORS AS NEEDED ON THE RAIL CENTER ON THE RAIL AND SECURE WITH 5/16-18 X 1 1/2" SELF DRILLING SCREWS AND APPROPRIATE SIZED WASHERS ALL HARDWARE SHOULD BE STEEL ZINC PLATED.

2. THE VIBRATION ISOLATOR IS BOLTED TO THE FAN PER THE INSTRUCTION GUIDE SUPPLIED WITH THE ISOLATOR.

3. SECURE RAIL TO ROOF FRAMING MEMBERS BY DRILLING 1/4" DIA PILOT HOLES IN THE RAIL FLANGE AT LOCATIONS SHOWN IN THE DIAGRAM. SEE TABLE BELOW FOR FASTENER TYPE AND QTY.

DESIGN PRESSURE: +112.5 / -112.5 PSF
LARGE MISSILE IMPACT RESISTANT

INSTALLATION FASTENER TYPES			
	WOOD (SG = 0.42 MIN.)	STEEL (12 GAUGE MIN.)	CONCRETE (2500 PSI MIN. CRACKED CONCRETE)
FASTENER	3/8" DIA. ZINC PLATED LAG BOLT	1/4"-14 DRIL-FLEX SELF DRILLING SCREW	3/8" DIA. SS HILTI KWIK BOLT TZ EXPANSION ANCHOR
MINIMUM THREAD PENETRATION	2-5/16"	12 GAUGE	2-5/16
MINIMUM EDGE DISTANCE	1-1/2"	3/8"	3"
MINIMUM END DISTANCE	2-5/8"	3/8"	4"
MINIMUM SPACING	1-1/2"	3/4"	7"

INSTALLATION FASTENER QTY									
	WOOD			STEEL			CONCRETE		
FAN MODEL	LONG SIDE	SHORT SIDE	TOTAL	LONG SIDE	SHORT SIDE	TOTAL	LONG SIDE	SHORT SIDE	TOTAL
BI18	3	1	8	2	1	6	2	1	6

MIAMI-DADE NOA2 A-SERIES SUPPLY FANS

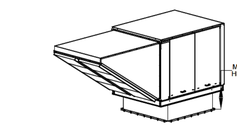

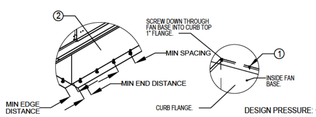

General Notes:

1. This approval is for the structural capacity and impact rating of the exterior housing only; it does not include any interior mechanism or electrical part.
2. These fans have not been wind tested for Wind Driven Rain Test per Florida Building Code, TAS100 (A)-95.
3. Tested in accordance to Florida Building Code test protocol TAS201, TAS202, TAS203.
4. Tested for areas including high velocity hurricane zones.
5. Tested under Miami-Dade County Notification number ATI-08034.

Installation Instructions:

1. SECURE FAN BASE TO TOP OF CURB USING 1/4-14 X 1" ZINC PLATED STEEL SELF DRILLING SCREWS (A307 OR BETTER) THROUGH FAN BASE. SEE TABLE BELOW FOR QTY.

2. SECURE CURB TO ROOF FRAMING MEMBERS BY DRILLING 1/4" DIA PILOT HOLES IN CURB AT LOCATION SHOWN IN BOTTOM LEFT DIAGRAM. SEE TABLE BELOW FOR FASTENER TYPE AND QTY.

DESIGN PRESSURE: +30.0 / -130.0 PSF
LARGE MISSILE IMPACT RESISTANT

INSTALLATION FASTENER TYPES					
	Fan To Curb	Wood (SG = 0.42 Min.)	Steel (12 Gauge Min.)	Concrete (2500 psi Min. Cracked Concrete)	
Fastener	1/4"-14 x 1" Self Drilling Screw (A307 OR BETTER)	3/8" Dia. Zinc Plated Lag Bolt	1/4"-14 Dril-Flex Self Drilling Screw	3/8" Dia. SS Hilti Kwik Bolt TZ Expansion Anchor	
Minimum Thread Penetration	N/A	2"	12 Gauge	2-5/16"	
Minimum Edge Distance	N/A	1-1/2"	3/8"	3"	
Minimum End Distance	N/A	2-5/8"	3/8"	4"	
Minimum Spacing	N/A	1-1/2"	3/4"	7"	

INSTALLATION FASTENER QTY												
	Curb to Fan			Wood			Steel			Concrete		
Fan Model	Long Side	Short Side	Total	Long Side	Short Side	Total	Long Side	Per Side	Total	Long Side	Short Side	Total
A1	2	2	8	4	3	14	4	3	14	3	2	10

MUA FAN INFORMATION - JOB#6544961

FAN UNIT NO	TAG	QTY	FAN UNIT MODEL #	BLOWER	HOUSING	MIN CFM	DESIGN CFM	ESP	RPM	MOTOR ENCL	HP	BHP	PHASE	VOLT	FLA	MCA	MOCP	WEIGHT (LBS)	SONES
2	KSF-1	1	AH-A1-15D-MPU	15MF-1-MOD	A1	1100	1760	0.500	1739	ODP,PREMIUM	1.500	0.8360	3	208	4.4	5.5A	15A	958	21.6

COILS - JOB#6544961

FAN UNIT NO	TAG	COIL TYPE	DESIGN CFM	COOLING									
				ENTERING DB TEMP	ENTERING WB TEMP	LEAVING DB TEMP	LEAVING WB TEMP	ENTERING FLUID TEMP	LEAVING FLUID TEMP	FLUID FLOW RATE	PERCENT GLYCOL	TOTAL CAPACITY	SENSIBLE CAPACITY	LATENT CAPACITY
2	KSF-1	DX	1760	91.0°F	78.0°F	80.8°F	73.0°F	---	---	---	---	36.0 MBH	19.1 MBH	16.9 MBH

CONDENSER DETAILS

FAN UNIT NO	TAG	FAN UNIT MODEL #	CONDENSER NO	TONNAGE	VOLTAGE	PHASE	FREQUENCY	MCA	RLA	MAX FUSE SIZE	MIN WIRE SIZE	SEER
2	KSF-1	AH-A1-15D-MPU	1	3	208-230	3 PHASE	60 HZ	14.5 AMPS	11.9 AMPS	20 AMPS	14 AWG	14

FAN #2 AH-A1-15D-MPU - SUPPLY FAN (KSF-1)
1. SUPPLY UNIT WITH 15" MIXED FLOW DIRECT DRIVE FAN IN SIZE #1 HOUSING.
2. INTAKE HOOD WITH EZ FILTERS.
3. SIDE DISCHARGE - AIR FLOW RIGHT -> LEFT.
4. MIAMI DADE IMPACT AND WIND LOAD CERTIFICATION +30 / -130 PSF - MIAMI DADE COUNTY PRODUCT CONTROL APPROVED. FLORIDA BUILDING CODE APPROVAL. ROOF MOUNT EXHAUST CURBS UP TO 20" HIGH MUST BE 18 GAUGE ALUMINIZED.
5. SUPPORT SHELL FOR SIZE 1 MODULAR PACKAGE UNIT. INCLUDES CONTROL VESTIBULE. INCLUDES CONDENSER SUPPORTS. DOES NOT INCLUDE RETURN AIR OR INLET AIR DAMPER.
6. 3 TON, SINGLE CIRCUIT MODULAR PACKAGED COOLING OPTION FOR SIZE 1 MODULAR PACKAGED UNIT INCLUDES CONDENSER, DX COIL, FILTER/DRYER KIT, THERMAL EXPANSION VALVE, R410A REFRIGERANT, AND REFRIGERANT PIPING. (1,100 TO 1,800 CFM) WHEN ORDERED WITH OPPOSITE AIRFLOW CONDENSERS ACCESS AND COIL PIPING WILL REMAIN IN STANDARD POSITION. DRAIN AND SLEDS WILL MOVE TO THE OPPOSITE SIDE. ANY OTHER CHANGE WILL REQUIRE CLI. CONDENSERS REQUIRE SEPARATE 208V, 3 PHASE POWER SUPPLY UNLESS ORDERED WITH SINGLE POINT CONNECTION. COIL = 2EJ1001N.
7. INSULATED BLOWER HOUSING SIZES 1-2 COMMERCIAL MODULAR.
8. CONTROL PACKAGE FOR MOD PACKAGE UNIT COOLING ONLY UNIT. INCLUDES AIRFLOW PROVING SWITCH, RTULINK-ACHP BOARD AND TERMINAL BLOCKS.
9. LOCKING CAPS FOR SINGLE CONDENSER UNITS. CONSISTS OF 2 LOCKING CAPS, PART# NCP-4, AND 1 KEY, PART# NC-KEY.
10. SEPARATE 120VAC WIRING PACKAGE FOR MAKE-UP AIR UNITS. OPTION MUST BE SELECTED WHEN MOUNTING VFD IN PREWIRE PANEL OR WITH DCV PACKAGE. PROVIDES SEPARATE 120VAC INPUT TO SUPPLY FAN. THIS 120V SIGNAL MUST BE RUN BY ELECTRICIAN FROM DCV TO MUA SWITCH.
11. HINGED DOUBLE WALL INSULATED DOOR ASSEMBLY (BURNER/BLOWER/MPU SECTION).
12. 2 YEAR PARTS WARRANTY.

*NOTE: SUPPLY DUCT MUST BE INSTALLED TO MEET SMACNA STANDARDS. A MINIMUM STRAIGHT DUCT LENGTH MUST BE MAINTAINED DOWNSTREAM OF UNIT DISCHARGE AS OUTLINED IN AMCA PUBLICATION 201. WHEN USING RECTANGULAR DUCTWORK, ELBOWS MUST BE RADIUS THROAT, RADIUS BACK WITH TURNING VANES. FLEXIBLE DUCTWORK AND SQUARE THROAT/SQUARE BACK ELBOWS SHOULD NOT BE USED. ANY TRANSITION AND/OR TURNS IN THE DUCTWORK WILL CAUSE SYSTEM EFFECT. SYSTEM EFFECT WILL DRASTICALLY INCREASE STATIC PRESSURE AND REDUCE AIRFLOW. DO NOT RELY ON UNIT TO SUPPORT DUCT IN ANY WAY. FAILURE TO PROPERLY SIZE DUCTWORK MAY CAUSE SYSTEM EFFECTS AND REDUCE PERFORMANCE OF THE EQUIPMENT. SUGGESTED STRAIGHT DUCT SIZE IS 20" x 20"

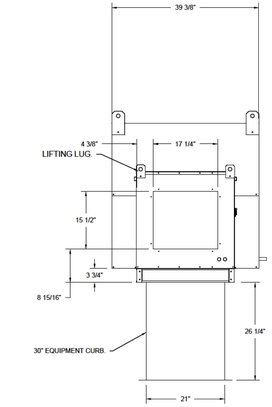

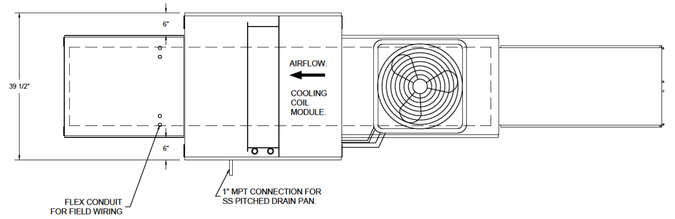

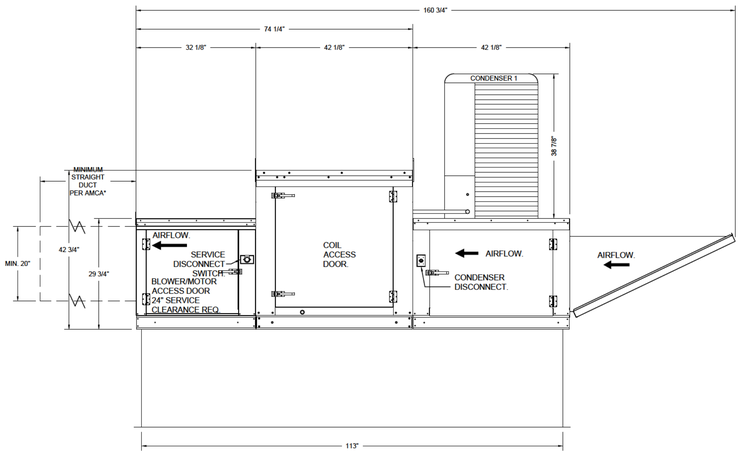

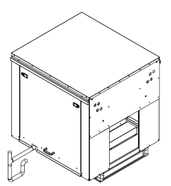

TYPICAL CONDENSATE DRAIN DETAIL

Recommended Cooling Coil Drain Trap Configuration

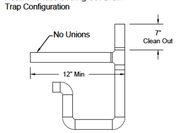

Notes:
1) 1" diameter PVC Pipe only
2) Use only low profile couplings
3) Add clean out as shown

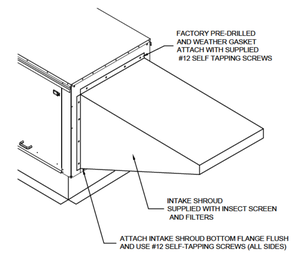

FILTERED INTAKE SHROUD DETAIL

Miami-Dade NOA

1. This approval is for the structural capacity and impact rating of the exterior housing only; it does not include any interior mechanisms or electrical part.
2. These fans have not been wind tested for Wind Driven Rain Test per Florida Building Code, TAS100 (A)-95.
3. Tested in accordance to Florida Building Code test protocol TAS201, TAS202, TAS203.
4. Tested for areas including high velocity hurricane zones.
5. Tested under Miami-Dade County Notification number ATI-08034.
6. No cables or strapping is required.
7. NOA2 - NOA# 18-0118.11 (RENEWAL NO# 21-0318.10) EXPIRES 03/ 04/ 2024

DESIGN PRESSURE: +30.0 / -130.0 PSF LARGE MISSILE IMPACT RESISTANT

INSTALLATION SHALL COMPLY WITH: NFPA 96 FBC-M - SMACNA ASHRAE - AMCA

HOOD PLAN
SHEET:
H-2

VENTILATION EQUIPMENT DETAILS

NOT TO SCALE

WHEN DIGITALLY SIGNED
Printed copies of this document are not considered signed and sealed and the signature must be verified only with the electronic copies.

RODNEY L. FRITZ, P.E.
AIR FLOW CONSULTANTS, LLC
FL. LICENSE # PE 50003
8474 SW 42 CT
DAVIE, FL 33328
PHONE: 954-541-4592
EMAIL: rfritz@airflowconsult.com

CAPTIVE AIRE HOODS ARE BUILT IN COMPLIANCE WITH

NFPA #96
NFPA #17A
NSF

UL710 STANDARDS
ETL LISTED 3054804-001

FOR QUESTIONS

PLEASE CONTACT
ADVANCED HOOD SYSTEMS
12250 WILES ROAD
CORAL SPRINGS, FL 33076
PHONE: (954) 551-9370 or (954) 937-0296
REG140@CAPTIVEAIRE.COM
STATE LIC# CSC1110285

RODNEY L FRITZ LICENSE No. 0050003 STATE OF FLORIDA PROFESSIONAL ENGINEER

DATE:_____

ADVANCED HOOD SYSTEMS

JOB	FORT LAUDERDALE POLICE HEADQUARTERS		
LOCATION	1300 W. BROWARD BLVD., FT. LAUDERDALE, FL		
DATE	4/4/24	JOB #	6544961
DWG #	1696	DRAWN BY	TMH
REV.		SCALE	NTS

CAM #24-0670
Exhibit 1

ELECTRICAL PACKAGE - JOB#6544961

NO	TAG	PACKAGE #	LOCATION	SWITCHES		OPTION	FANS CONTROLLED				
				LOCATION	QUANTITY		FAN TAG	TYPE	ϕ	HP	VOLT	FLA
1		SC-311110MA	UTILITY CABINET LEFT	UTILITY CABINET LEFT	1 LIGHT	SMART CONTROLS THERMOSTATIC CONTROL W/ RELAY ON/OFF WITH SUPPLY	KEF-1	EXHAUST	3	1.500	208	6.6
				HOOD # 1	1 FAN		KSF-1	SUPPLY	3	1.500	208	4.4

JOB NO 6544961 | MODEL NUMBER SC-311110MA | JOB NAME Ft Lauderdale Police Dept | DRAWN BY | DATE 3/19/2024 | SCHEMATIC TYPE INSTALL | DWG NO ECP #1-1

DESCRIPTION OF OPERATION:
3 Phase w/ control for 1 Exhaust Fan, 1 Supply Fan, Exhaust on in Fire, Lights out in Fire, Relay On/Off with Supply Fan, Fan(s) On/Off Thermostatically Controlled. Room temperature sensor shipped loose for field installation. INVERTER DUTY 3 PHASE MOTOR REQUIRED FOR USE WITH VFD.

BREAKER PANEL TO PRIMARY CONTROL PANEL
Responsibility: Electrician
BREAKER SIZE SHOWN IS THE MAXIMUM ALLOWED

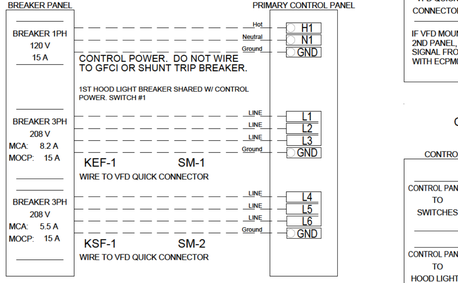

BREAKER PANEL TO FANS
Responsibility: Electrician

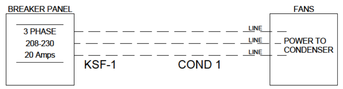

CONTROL PANEL TO FANS
Responsibility: Electrician

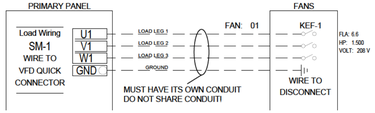

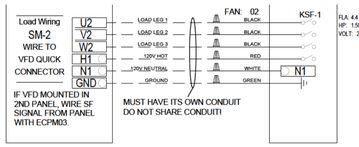

CONTROL PANEL TO ACCESSORY ITEMS
Responsibility: Electrician

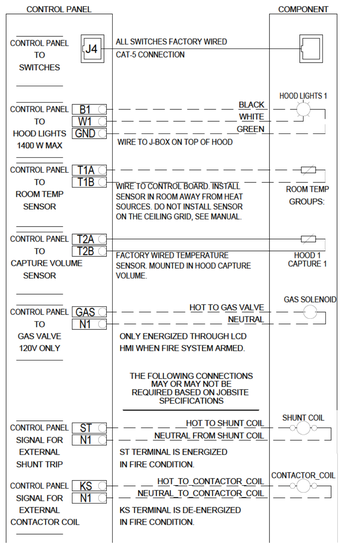

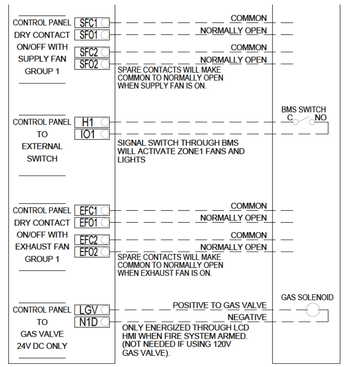

CONTROL PANEL TO FIRE SYSTEM
Responsibility: ALARM CONTRACTOR

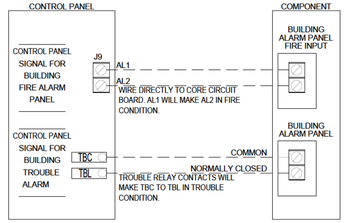

CONTROL PANEL TO FIRE SYSTEM
Responsibility: CERTIFIED INSTALLER

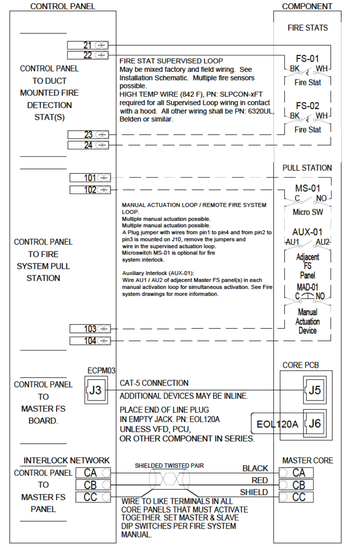

TECHNICAL SUPPORT:
Please call 1-866-784-6900
Reference Job #: 6544961

ELECTRICAL NOTES:
All Hood/Fan/Sensor/Fire System electrical connections and interconnections to be provided and installed by Electrician. Electrician to provide, install, and land wiring between hood lights, hood temp sensors, hood fire sensors, and any other component requiring an electrical connection to the Captive-Aire electrical package.
Failure by the Electrician to make ALL required electrical connections and interconnections will result in the electrical controls not working properly. Any loss or failed test as a result of electrical controls not working properly is the responsibility of the Electrician.

SEQUENCE OF OPERATION

UPON ACTIVATION OF FIRE SUPPRESSION SYSTEM:

A. ALL GAS EQUIPMENT SHALL SHUT OFF THROUGH THE USE OF A MECHANICAL SHUT-OFF VALVE. FURNISHED BY FIRE SUPPRESSION CONTRACTOR AND INSTALLED BY PLUMBING CONTRACTOR.

B. ALL ELECTRIC EQUIPMENT UNDER THE KITCHEN HOOD AND ANY OUTLETS SHALL SHUT OFF DONE WITH A SHUNT TRIP BREAKER FOR CIRCUITS AND WIRED TO MICRO-SWITCH IN FIRE SUPPRESSION SYSTEM OR SIGNAL FROM HOOD CONTROLLER. ALTERNATIVELY DONE WITH USE OF CONTACTOR ON CIRCUIT.

C. BUILDING FIRE ALARM OR STAND-A-LONE HORN & STROBE DEVICE SHALL ANNUNCIATE DONE WITH ALARM INITIATING MICRO-SWITCH IN FIRE SUPPRESSION OEM RELEASE (SEE BELOW FOR WIRING DETAILS). MUST BE CONNECTED TO BUILDING FIRE ALARM IF PRESENT PER NFPA 72.

D. SUPPLY / MAKE-UP-AIR TO THE KITCHEN HOOD SHALL SHUT OFF DONE WITH THE HOOD CONTROL PANEL INTERLOCKED WITH THE MICRO-SWITCH IN THE FIRE SUPPRESSION OEM RELEASE.

E. EXHAUST FAN SHALL TURN ON TO HELP EXTRACT THE SMOKE CREATED FROM THE FIRE SUPPRESSION SYSTEM. FIRE MODE REQUIRES EXHAUST FAN TO OPERATE CONTINUALLY AND STOP SUPPLY FAN. MICRO-SWITCH IN THE FIRE SYSTEM OEM RELEASE WILL SEND SIGNAL TO HOOD CONTROL PANEL.

ROOM TEMPERATURE SENSOR

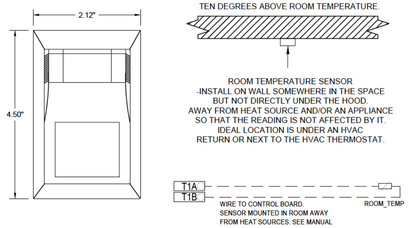

OPERATION NOTE
HOOD(S) ARE PROVIDED WITH TEMPERATURE SENSOR(S) AND SHALL AUTO START WITH DETECTION OF HEAT SOURCE IN ACCORDANCE WITH FBC (M) 507.1.1

HUMAN MACHINE INTERFACE

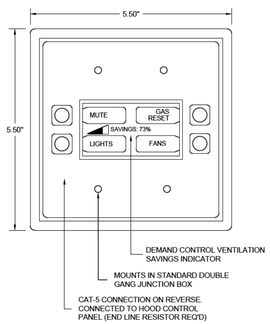

ELECTRICAL DETAILS AND SCHEMATICS
FOR REFERENCE ONLY - ALL ELECTRICAL FIELD WORK BY LICENSED E.C. UNDER SEPARATE PERMIT

TANK PROTECTION LOW-VOLTAGE DETAIL

ALARM CONTRACTOR:
1. WIRE MANUAL ACTUATION DEVICE(S), REMOTE FIRESTAT(S), CORE INTERLOCK(S), FIRE SENSOR(S) AND FIRE ALARM CONTACTS
2. COMPLETE FINAL HOOKUP OF SYSTEM
3. VERIFY FINAL FIRE SYSTEM TEST

ALARM CONTRACTOR REQUIREMENT					
ITEM	CONNECTION IN PANEL	CONNECTION ON DEVICE	VOLTAGE	AMPERAGE	COMMENTS
MANUAL ACTUATION DEVICE(S)	101 AND 104 102 AND 103	1 & 2	24 VDC	< 1.0 AMPS	WIRE MANUAL ACTUATION DEVICE TERMINAL 1 BETWEEN CORE PANEL TERMINALS 102 AND 103 WIRE MANUAL ACTUATION DEVICE TERMINAL 2 BETWEEN CORE PANEL TERMINALS 101 AND 104 JUMPER 101 TO 104 AND 102 TO 103 IF NO MANUAL ACTUATION DEVICE IS INSTALLED
MANUAL ACTUATION DEVICE COVER	N/A	N/A	N/A	N/A	MANUAL ACTUATION DEVICE COVER MUST BE INSTALLED IF SURFACE MOUNTED, USE COVER EXTENSION 51-65318
REMOTE FIRESTAT SENSOR(S)	21 AND 24 22 AND 23	BLACK AND WHITE	24 VDC	< 1.0 AMPS	WIRE FIRE SENSOR WHITE WIRES BETWEEN HOOD CORE PANEL TERMINALS 22 AND 23 WIRE FIRE SENSOR BLACK WIRE BETWEEN HOOD CORE PANEL TERMINALS 21 AND 24 HIGH TEMP (842°F) #CW04427 (WHT) & #CW04278 (BLK)WIRE OR SIMILAR ONLY IF RUN OVER TOP OF HOOD, OTHERWISE BELDEN #5200UL OR SIMILAR PLENUM RATED WIRE. SEE FIGURE 1
FIRE ALARM CONTACT	AL1, AL2	VARIES	50V MAX (ADEQ)	UP TO 1 AMP	FIRE ALARM RELAY CONTACTS FOR BUILDING FIRE ALARM LOCATED IN THE CORE ELECTRICAL CONTROL PANEL
CORE INTERLOCK(S)	IL4, IL8, IL5	IL4, IL8, IL5	RS-485 COMMUNICATIONS SIGNAL		CORE SYSTEM (1) IL4, TO CORE SYSTEM (2) IL4, CORE SYSTEM (1) IL8, TO CORE SYSTEM (2) IL8, CORE SYSTEM (1) IL5, TO CORE SYSTEM (2) IL5. USE BELDEN# 88760 OR SIMILAR WIRE
TROUBLE CONTACT	TBC, TBL, TOK	VARIES	MAX 120 VAC	UP TO 6 AMPS	WIRE TO TBL & TBC NORMALLY OPEN CONTACT, CLOSES IN TROUBLE CONDITION
CORE COMMUNICATIONS CABLE	RJ-45 Jack	INTERNET CONNECTION	SIGNAL	<1.0 AMPS	TYPICAL CONNECTION CATS CABLE TO LOCAL AREA NETWORK VIA ETHERNET SWITCH OR WIRELESS ROUTER WITH VALID INTERNET CONNECTION

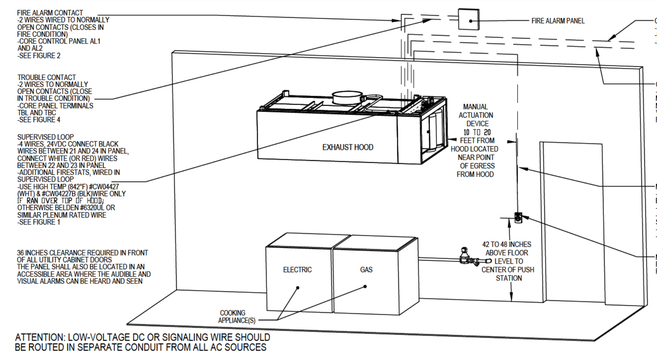

ATTENTION: LOW-VOLTAGE DC OR SIGNALING WIRE SHOULD BE ROUTED IN SEPARATE CONDUIT FROM ALL AC SOURCES
NOTE: SEE INSTALLATION, OPERATION, AND MAINTENANCE MANUAL FOR FURTHER INSTRUCTIONS

TANK PROTECTION ELECTRICAL DETAIL

ELECTRICIAN:
1. WIRE MAIN CONTROL PANEL PER INCLUDED SCHEMATIC
2. WIRE ALL FANS PER INCLUDED SCHEMATIC
3. WIRE SHUNT TRIP BREAKER (OPTIONAL)
4. WIRE UDS APPLIANCE KILL SWITCH, IF EQUIPPED (OPTIONAL)
5. WIRE GAS VALVE

ELECTRICAL CONTRACTOR REQUIREMENT					
ITEM	CONNECTION IN PANEL	CONNECTION IN DEVICE	VOLTAGE	AMPERAGE	COMMENTS
SHUNT TRIP BREAKER (OPTIONAL)	ST & N1	BREAKER COIL (A1 & A2)	120 VAC	< 4 AMPS	ST TO A1 ON SHUNT BREAKER COIL, AND NEUTRAL TO A2 ON SHUNT TRIP BREAKER COIL
CONTROL PANEL POWER	H1 & N1 + GROUND	CIRCUIT BREAKER	120 VAC	15 AMPS	CONTROL PANEL POWER MUST NOT BE RUN THROUGH SHUNT TRIP BREAKER
UDS APPLIANCE KILL SWITCH (OPTIONAL)	KTS & N1	KTS & N1	120 VAC	< 4 AMPS	KILL SWITCH TERMINALS MUST BE IN SERIES WITH OTHER KILL SWITCHES
REMOTE 120 VAC ANSUL AUTOMAN (OPTIONAL)	AU1, AU2	SOLENOID	120 VAC	< 6 AMPS	120V TO AU1, AU2 TO ANSUL ELECTRIC AUTOMAN, ANSUL SOLENOID TO NEUTRAL
GAS VALVE	LGV & N1D (IF 24 VDC) GAS & N1 (IF 120 VAC)	RED/RED/GREEN	24 VDC OR 120 VAC	< 1.0 AMPS	IF 24 VDC - 2 WIRES & GROUND, N1D TO RED, LGV TO RED, AND GREEN TO GROUND IF 120 VAC - 2 WIRES & GROUND GAS TO RED, N1 TO RED, AND GREEN TO GROUND
120V STANDALONE HORNSTROBE DEVICE	ST & N1	CIRCUIT BREAKER	120 VAC	< 4 AMPS	ONLY USE WHEN NO FIRE ALARM IS PRESENT, ST & N1 TO 120V HORNSTROBE DEVICE

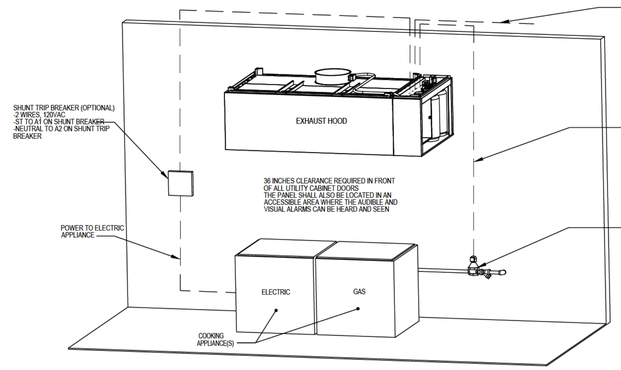

WHEN DIGITALLY SIGNED
Printed copies of this document are not considered signed and sealed and the signature must be verified only with the electronic copies.

RODNEY L. FRITZ, P.E.
AIR FLOW CONSULTANTS, LLC
FL. LICENSE # PE: 50003
8474 SW 42 CT.
DAVIE, FL 33328
PHONE: 954-541-4592
EMAIL: rfritz@airflowconsult.com

NOTE: SEE INSTALLATION, OPERATION, AND MAINTENANCE MANUAL FOR FURTHER INSTRUCTIONS

TANK IOM MANUAL
JANUARY 2024 REV. 24

CAPTIVE AIRE HOODS ARE BUILT IN COMPLIANCE WITH
NSF NFPA ETL
NFPA #96
NFPA #17A
NSF
UL710 STANDARDS
ETL LISTED 3054804-001

FOR QUESTIONS
PLEASE CONTACT
ADVANCED HOOD SYSTEMS
12250 WILES ROAD
CORAL SPRINGS, FL 33076
PHONE: (954) 551-9370 or (954) 937-0296
REG140@CAPTIVEAIRE.COM
STATE LIC# CSC1110285

RODNEY L FRITZ LICENSE No. 0050003 STATE OF FLORIDA PROFESSIONAL ENGINEER
DATE:_____

INSTALLATION SHALL COMPLY WITH: NFPA 96 FBC-M -- SMACNA ASHRAE -- AMCA
HOOD PLAN
SHEET: H-3

ADVANCED HOOD SYSTEMS

JOB	FORT LAUDERDALE POLICE HEADQUARTERS		
LOCATION	1300 W. BROWARD BLVD., FT. LAUDERDALE, FL		
DATE	4/4/24	JOB #	6544961
DWG #	1696	DRAWN BY	TMH
REV.		SCALE	NTS

CAM #24-0670
Exhibit 1

NET PRESSURE SPACE	HVAC ADJACENT SET O/A	HVAC KITCHEN SET O/A	HVAC BATHROOM EXHAUST	TOTAL HOOD KITCHEN VENTILATION EXHAUST	TOTAL HOOD KITCHEN VENTILATION SUPPLY
+ 160 CFM	+ 600 CFM	+ 200 CFM	- 200 CFM	- 2,200 CFM	+ 1,760 CFM

**DIAGRAM IS RECOMMENDED O/A VALUES
SEE MECHANICAL PLANS FOR ACTUAL O/A SCHEDULE

KITCHEN TO ADJACENT PRESSURE DIFFERENCE
- 240 CFM

AIR BALANCE DIAGRAM

*NOTE: NEGATIVE PRESSURE IN KITCHEN SHALL NOT TO EXCEED .02" WG

EXHAUST DUCT VELOCITY CALCULATIONS
TYPE I GREASE HOOD

TOTAL EXHAUST CFM = 2,200

VELOCITY = CFM / AREA (FT)
EXHAUST DUCT SIZE = 14x14
AREA = 14x14/144 = 1.36 SQ FT
VELOCITY =
2,200/1.36 SQ FT = 1,618 FPM

HVAC DESIGN REQUIRES:	YES	NO
FIRE DAMPER(S)		●
SMOKE DETECTOR(S)		●
FIRE RATED ENCLOSURE	●	
FIRE RATED ROOF/FLOOR CEILING ASSEMBLY		●
FIRE STOPPING		●
SMOKE CONTROL		●

DUCT SIZING NOTE:

GREASE EXHAUST DUCT HAS BEEN SIZED TO MAINTAIN AN AIR VELOCITY AT 1500 FPM. SUPPLY DUCT HAS BEEN SIZED TO MAINTAIN AN AIR VELOCITY AT 1000 FPM. ANY MODIFICATIONS TO THE EXHAUST OR SUPPLY DUCT, INCLUDING OFFSETS / TRANSITIONS MUST MAINTAIN THE SAME SQUARE AREA.

A x B = C (SQ AREA)
C ÷ B = A

GENERAL CONSTRUCTION NOTES:

A. METAL STUD WALL WITH DRYWALL OR CONCRETE BOARD TO COMPLY WITH NFPA 96

B. GRIDSTONE OR SIMILAR LAY-IN ACOUSTIC CEILING PANELS WITH DRYWALL & CLEANABLE SURFACE TO COMPLY WITH USDA AND NFPA 96

C. CONCRETE EXTERIOR WALLS WITH CMU AND STEEL REINFORCED STRUCTURE

D. CONCRETE COLUMN AND CONCRETE BEAM WITH CONCRETE SLAB ABOVE

AIR BALANCE NOTE:

TOTAL HOOD EXHAUST = 2,200 CFM
TOTAL HOOD SUPPLY = 1,760 CFM
TOTAL NET DIFFERENCE = 440 CFM

HVAC SYSTEM TO PROVIDE A MINIMUM 440 CFM OF OUTSIDE AIR FOR BALANCED BUILDING PRESSURE

KITCHEN SHALL BE NEGATIVE WITH RESPECT TO ADJACENT AREAS NOT TO EXCEED -0.02" W.C.

DUCT ROUTING & VENTILATION NOTE:

HOOD SYSTEM IS MULTI-STORY WITH EXHAUST DUCT AND MAKE-UP AIR DUCT ROUTED UP TO ROOF MOUNT EQUIPMENT ABOVE KITCHEN AREA. INSTALL SHALL COMPLY WITH EIGHTH EDITION 2023 FBC, FMC, 2021 NFPA 96

COMBUSTIBLE BUILDING MATERIALS NOTE:

NO BUILDING COMBUSTIBLES SHALL BE WITHIN 18" OF COOKING EQUIPMENT, KITCHEN EXHAUST DUCT, EXHAUST PCU, EXHAUST FAN, OR KITCHEN HOOD OR WITHIN 3" OF LIMITED COMBUSTIBLES PER NFPA 96.

GREASE EXHAUST DUCT INSULATION NOTE:

ENTIRE TYPE I EXHAUST DUCT SHALL BE INSULATED IN TWO LAYERS OF MORGAN THERMAL CERAMICS PYROSCAT DUCT WRAP OR FAST WRAP XL OR SIMILAR GREASE DUCT ENCLOSURE PER ASTM E2336 AND 2023 FMC 506.3.11.

MAKE-UP AIR SUPPLY DUCT INSULATION NOTE:

CONDITIONED OR TEMPERED OUTSIDE AIR SUPPLY DUCT SHALL BE INSULATED WITH MINIMUM R-6 IN UNCONDITIONED SPACES AND MINIMUM R-12 WHERE DUCT IS LOCATED OUTSIDE THE BUILDING PER ASHRAE 90.1 AND IECC.

GENERAL NOTES:

1. DRAWINGS ARE DIAGRAMMATICAL IN NATURE: DO NOT SCALE FOR EXACT LOCATIONS. THESE DRAWINGS REPRESENT EXISTING CONDITIONS BASED ON PREVIOUS DRAWINGS AND SITE OBSERVATIONS. CONTRACTOR IS RESPONSIBLE FOR FIELD VERIFICATION OF ALL ACTUAL CONDITIONS.
2. ELECTRICAL HOOK-UP TO MOTOR CONTROLS, MOTOR DISCONNECT, FAN SWITCHES, RELAYS, FINAL TERMINATION, ROTATION VERIFICATION, ETC. SHALL ALL BE DONE BY OTHERS (STATE LICENSED E.C.)
3. FIRE CHASE BY OTHERS IF IT SHALL BE REQUIRED. ANY REQUIRED ACCESS DOORS IN SUCH RATED FIRE CHASE SHALL BE PROVIDED AND INSTALLED BY OTHERS.
4. WRITTEN MEASUREMENTS HAVE PRECEDENCE OVER SCALE.
5. PROVIDE CLEANOUTS IN GREASE EXHAUST DUCT AS INDICATED TO ALLOW CLEANING AT ALL BENDS AND HORIZONTAL RUNS.
6. GREASE EXHAUST DUCT SHALL BE MIN. 16 GA. CARBON STEEL WITH OR WITHOUT GALVANIZED ZINC COATING OR MIN. 18 GA. 3-SERIES STAINLESS-STEEL.
7. GREASE EXHAUST DUCT SEAMS AND JOINTS SHALL HAVE A LIQUID TIGHT CONTINUOUS EXTERNAL WELD OR A LISTED UL 1978 FACTORY BUILT "BOLT-TOGETHER" DUCT CAN ALTERNATIVELY BE USED AND INSTALLED PER MANUFACTURER.
8. INTERNAL WELDING OF GREASE EXHAUST DUCT OR CONNECTIONS SHALL BE PERMITTED, PROVIDED THE JOINT IS FORMED OR GROUND SMOOTH AND ACCESSIBLE FOR INSPECTION.
9. HORIZONTAL GREASE EXHAUST DUCT SHALL SLOPE BACK TO HOOD ONE QUARTER UNIT VERTICALLY FOR EVERY TWELVE UNITS HORIZONTAL AT A MINIMUM. CHECK WITH LOCAL CODE AND FOR LONG HORIZONTAL RUNS EXCEEDING 75 FEET.
10. GREASE EXHAUST DUCT INSTALLATION SHALL NOT CREATE A GREASE TRAP OR OBSTRUCTION IN FLOW OF MORE THAN ONE QUARTER INCH.
11. GREASE EXHAUST DUCT CHANGE IN DIRECTION SHALL HAVE A MIN. 3" RADIUS THROAT AND CORRESPONDING RADIUS CHEEK AS SHOWN. NO TURNING VANES, NON-LISTED VOLUME DAMPERS, OR FIRE DAMPERS SHALL OBSTRUCT THE FLOW OF GREASE LADEN AIR.
12. COOKING EQUIPMENT, TYPE I HOOD AND GREASE EXHAUST DUCT TO BE PROTECTED FROM COMBUSTIBLES PER NFPA 96 (2021) AND LOCAL CODE.
13. MUA DUCT SHALL BE MIN. 24 GA. CARBON STEEL GALVANIZED ZINC COATING WITH PITTSBURGH SEAM, OR MIN. 26 GA. GALV. SNAP-LOCK PIPE, CONSTRUCTED PER ASHRAE & SMACNA STANDARDS, AND SEALED TO PREVENT LEAKAGE.
14. CONDITIONED MUA DUCT WHICH CONTAINS TEMPERED AIR OR IS INSTALLED IN SUCH A PLACE WHERE THE SUPPLYING AIR IS BELOW THE DEW POINT TEMPERATURE, THEN A MINIMUM R-6 INSULATION SHALL BE USED IN UNCONDITIONED SPACES AND MINIMUM R-12 INSULATION WHERE THIS DUCT IS LOCATED OUTSIDE THE BUILDING PER ASHRAE 90.1 AND IECC.
15. MANUAL VOLUME DAMPERS SHALL BE INSTALLED IN ALL SUPPLY BRANCH DUCTS AS CLOSE TO MAIN DUCT AS POSSIBLE AND WITHIN ACCESS. EXCEPTION: WITHIN 3 FEET OF MUA COLLAR WITH OBD.
16. SUPPLY AIR CHANGE IN DIRECTION SHALL HAVE MIN. 6" RADIUS THROAT AND CORRESPONDING RADIUS CHEEK AS SHOWN. ANY SQUARE CHEEK SHALL REQUIRE TURNING VANES.
17. KITCHEN SHALL BE BALANCED TO BE NEGATIVE WITH RESPECT TO ADJACENT AREAS NOT TO EXCEED 0.02" WATER COLUMN.

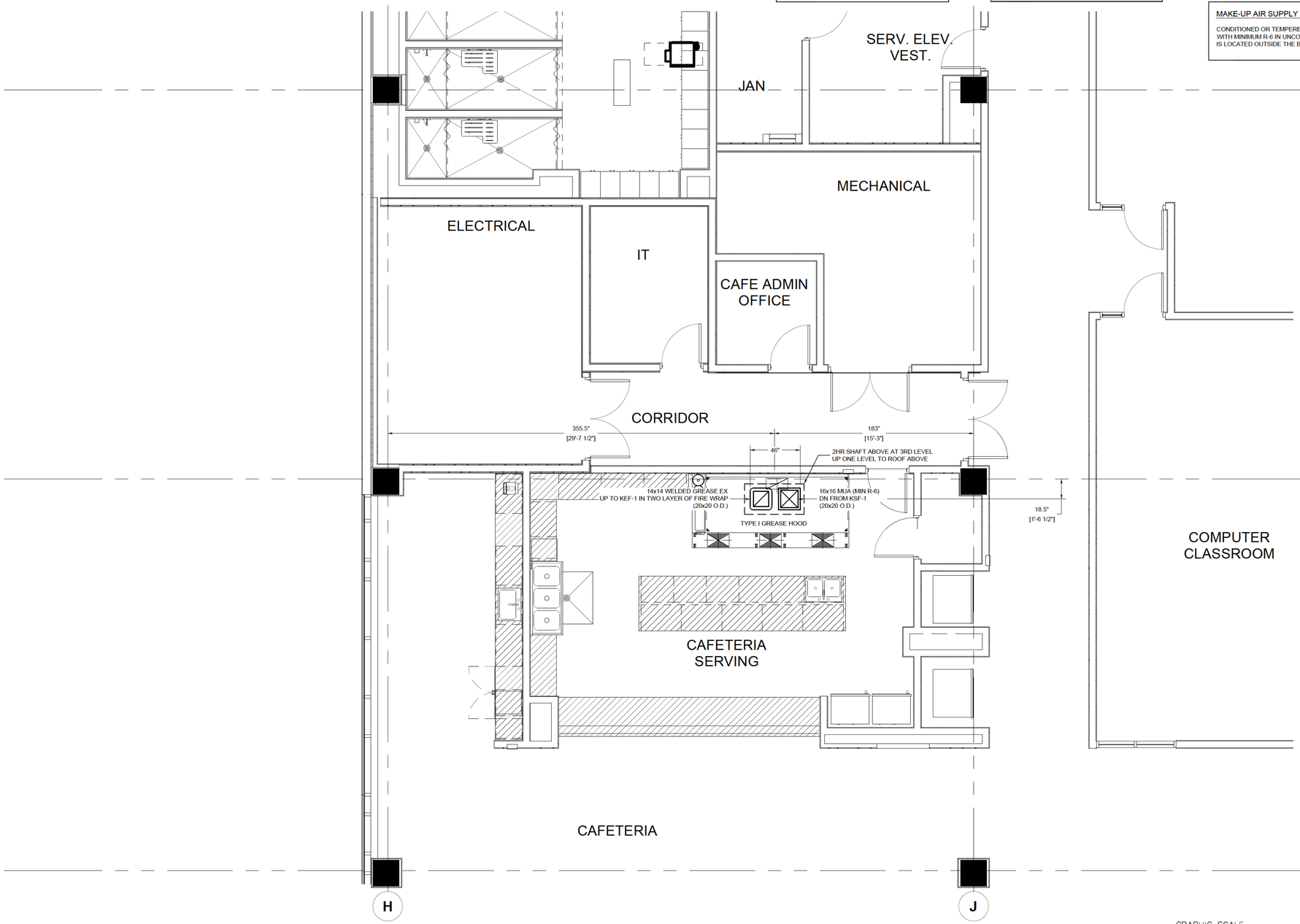

PLAN VIEW – KITCHEN VENTILATION 2ND LEVEL

SCALE: ⅛" = 1' - 0"

GRAPHIC SCALE
0 FEET 2 4 6 8

INSTALLATION SHALL COMPLY WITH NFPA 96 FBC-M – SMACNA ASHRAE – AMCA

HOOD PLAN
SHEET: H-4

CLEAN OUT DOOR SYMBOL

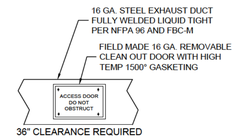

CLEAN OUT DOOR INSTALL ON SIDES OR TOP MIN. 1-1/2" CLEARANCE BETWEEN EDGE OF OPENING AND BOTTOM OF DUCT INSTALL FOR ACCESS AT EACH CHANGE IN DIRECTION AND MIN. EVERY 12 FT ON HORIZONTAL RUNS

GREASE EXHAUST DUCT SHALL SLOPE A MINIMUM 1/4 UNIT VERTICALLY FOR EVERY 12 UNITS HORIZONTAL BACK TO KITCHEN HOOD

WHEN DIGITALLY SIGNED
Printed copies of this document are not considered signed and sealed and the signature must be verified only with the electronic copies.

RODNEY L. FRITZ, P.E.
AIR FLOW CONSULTANTS, LLC
FL. LICENSE # PE 50003
9474 SW 42 CT.
DAVIE, FL 33328
PHONE: 954-541-4592
EMAIL: rfritz@airflowconsult.com

CAPTIVE AIRE HOODS ARE BUILT IN COMPLIANCE WITH

NFPA #96
NFPA #17A
NSF

UL710 STANDARDS
ETL LISTED 3054804-001

FOR QUESTIONS

PLEASE CONTACT
ADVANCED HOOD SYSTEMS
12250 WILES ROAD
CORAL SPRINGS, FL 33076
PHONE: (954) 551-9370 or (954) 937-0296
REG140@CAPTIVEAIRE.COM
STATE LIC# CSC1110285

RODNEY L FRITZ LICENSE No. 0050003 STATE OF FLORIDA PROFESSIONAL ENGINEER

DATE:_____

ADVANCED HOOD SYSTEMS

JOB	FORT LAUDERDALE POLICE HEADQUARTERS		
LOCATION	1300 W. BROWARD BLVD., FT. LAUDERDALE, FL		
DATE	4/4/24	JOB #	6544961
DWG #	1696	DRAWN BY	TMH
REV.		SCALE	AS NOTED

CAM #24-0670
Exhibit 1
Page 196 of 288

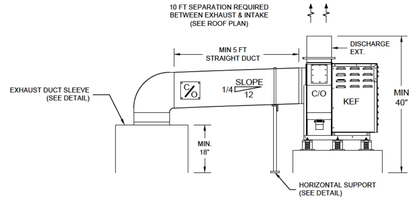

WELDED DUCT & FAN DETAIL

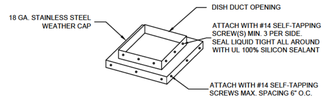

MUA SLEEVE DETAIL

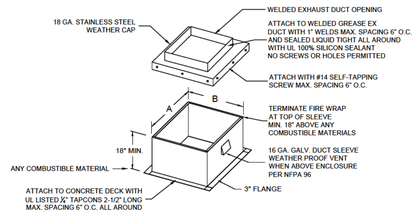

WELDED EX DUCT SLEEVE DETAIL

FBC TABLE 1522.3 ROOF MOUNTED EQUIPMENT HEIGHT REQUIREMENTS	
WIDTH OF MECHANICAL UNIT (inches)	MINIMUM CLEARANCE ABOVE SURFACE (inches)
< 24	14
25 < 36	18
37 < 48	24
49 < 60	30
61 AND WIDER	48

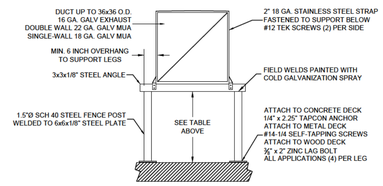

NOTE: ONE SUPPORT EVERY 4 FT OF DUCT

HORIZONTAL DUCT SUPPORT

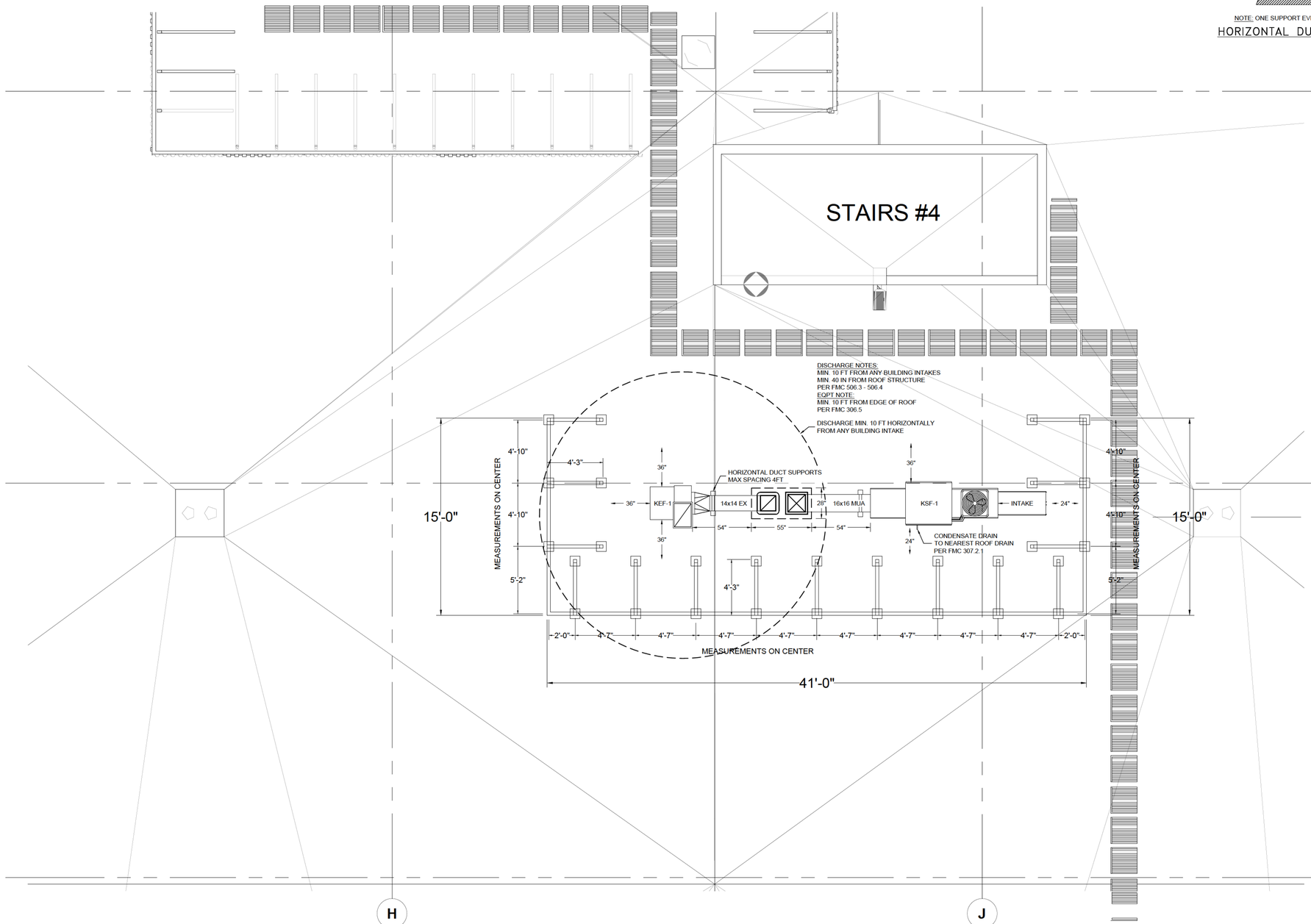

ROOF PLAN – KITCHEN VENTILATION 3RD LEVEL

SCALE: ⅛" = 1' - 0"

GRAPHIC SCALE

0 FEET 2 4 6 8

INSTALLATION SHALL COMPLY WITH: NFPA 96 FBC-M – SMACNA ASHRAE – AMCA

HOOD PLAN

SHEET: H-5

ROOF TOP EQUIPMENT SERVICE:

EQUIPMENT AND APPLIANCES ON ROOFS OR ELEVATED STRUCTURES SHALL COMPLY WITH FMC 306.5

WHERE EQUIPMENT REQUIRING ACCESS ARE LOCATED ON AN ELEVATED STRUCTURE OR ROOF OF A BUILDING SUCH THAT PERSONNEL WILL HAVE TO CLIMB HIGHER THAN 16 FEET ABOVE GRADE TO ACCESS SUCH EQUIPMENT AN INTERIOR OR EXTERIOR MEANS OF ACCESS SHALL BE PROVIDED PER FMC.

SUCH ACCESS SHALL NOT REQUIRE CLIMBING OVER OBSTRUCTIONS GREATER THAN 30 INCHES IN HEIGHT OR WALKING ON ROOFS HAVING A SLOPE GREATER THAN FOUR UNITS VERTICAL IN TWELVE UNITS HORIZONTAL.

ROOF TOP TERMINATIONS FOR TYPE I HOODS:

ROOF TOP EXHAUST TERMINATIONS SHALL DISCHARGE A MINIMUM OF 10 FEET HORIZONTAL FROM ANY BUILDING INTAKES, OPERABLE DOORS OR WINDOWS PER NFPA 96 - 7.8.2. WHERE 10 FEET HORIZONTAL SEPARATION IS NOT POSSIBLE THE EXHAUST FAN DISCHARGE SHALL BE A MINIMUM OF 3 FEET VERTICALLY ABOVE ANY BUILDING INTAKES.

EXHAUST SHALL DISCHARGE A MINIMUM OF 10 FEET FROM PROPERTY LINE PER FMC 501.2.1.

ROOF MOUNTED EQUIPMENT REQUIRING SERVICE SHALL BE INSTALLED A MINIMUM OF 10 FEET FROM ANY EDGE WITHOUT A MINIMUM PARAPET OF 42" HIGH FOR SAFE ACCESS DURING MAINTENANCE / SERVICE PER FMC 306.5. OR A 42" HIGH SAFETY RAILING SHALL BE PROVIDED PER FMC 304.11.

ROOF TOP GREASE EXHAUST SHALL DISCHARGE A MINIMUM OF 40" ABOVE ROOF STRUCTURE AND ABOVE ANY PARAPET WALL OR PARTS OF A BUILDING STRUCTURE, OR A MINIMUM OF 10 FEET HORIZONTAL CLEARANCE FROM SUCH STRUCTURE, OR A MINIMUM OF 5 FEET FROM SUCH STRUCTURE IF IT DISCHARGES AWAY FROM SUCH STRUCTURE PER FMC 506.3.13.1 AND DISCHARGE WILL NOT IMPINGE ON THE ROOF, OTHER EQUIPMENT OR APPLIANCES OR PARTS OF STRUCTURE PER FMC 506.5.3

EXHAUST EQUIPMENT SERVING TYPE I HOODS SHALL BE MINIMUM 2 FEET FROM PARAPET-TYPE BUILDING STRUCTURE PROVIDED THAT SUCH STRUCTURE ARE NOT HIGHER THAN THE TOP OF THE FAN DISCHARGE OPENING PER FMC 506.5.6.

MAKE-UP AIR INTAKES:

401.4 INTAKE OPENING LOCATION

AIR INTAKE OPENINGS SHALL COMPLY WITH ALL OF THE FOLLOWING:

1. INTAKE OPENINGS SHALL BE LOCATED NOT LESS THAN 10 FEET FROM LOT LINES OR BUILDINGS ON THE SAME LOT.

MECHANICAL AIR INTAKE OPENINGS SHALL BE LOCATED NOT LESS THAN 10 FEET HORIZONTALLY FROM ANY HAZARDOUS OR NOXIOUS CONTAMINANT SOURCE, SUCH AS VENTS, STREETS, ALLEYS, PARKING LOTS AND LOADING DOCKS, EXCEPT AS SPECIFIED IN ITEM 3 OR SECTION 501.3.1. SUCH INTAKES ARE LOCATED NOT LESS THAN 25 FEET VERTICALLY ABOVE SUCH LOCATIONS.

2. INTAKE OPENINGS SHALL BE LOCATED NOT LESS THAN 3 FEET BELOW CONTAMINANT SOURCES WHERE SUCH SOURCES ARE LOCATED WITHIN 10 FEET OF THE OPENING.

INTAKE OPENINGS ON STRUCTURES IN FLOOD HAZARD AREAS SHALL BE AT OR ABOVE THE ELEVATION REQUIRED BY SECTION 1612 OF THE FBC.

401.5 INTAKE OPENING PROTECTION

AIR INTAKE OPENINGS THAT TERMINATE OUTDOORS SHALL BE PROTECTED WITH CORROSION-RESISTANT SCREENS, LOUVERS OR GRILLES.

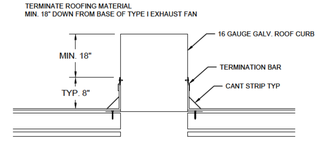

EX CURB ROOFING MATERIAL DETAIL

WHEN DIGITALLY SIGNED
Printed copies of this document are not considered signed and sealed and the signature must be verified only with the electronic copies.

RODNEY L. FRITZ, P.E.
AIR FLOW CONSULTANTS, LLC
FL. LICENSE # PE 50003
8474 SW 42 CT
DAVIE, FL 33328
PHONE: 954-541-4592
EMAIL: rfritz@airflowconsult.com

CAPTIVE AIRE HOODS ARE BUILT IN COMPLIANCE WITH

NFPA #96
NFPA #17A
NSF

UL710 STANDARDS
ETL LISTED 3054804-001

FOR QUESTIONS

PLEASE CONTACT
ADVANCED HOOD SYSTEMS
12250 WILES ROAD
CORAL SPRINGS, FL 33076
PHONE: (954) 551-9370 or (954) 937-0296
REG140@CAPTIVEAIRE.COM
STATE LIC# CSC1110285

RODNEY L FRITZ LICENSE No. 0050003 STATE OF FLORIDA PROFESSIONAL ENGINEER

DATE:_____

ADVANCED HOOD SYSTEMS

JOB	FORT LAUDERDALE POLICE HEADQUARTERS		
LOCATION	1300 W. BROWARD BLVD., FT. LAUDERDALE, FL		
DATE	4/4/24	JOB #	6544961
DWG #	1696	DRAWN BY	TMH
REV.		SCALE	1/4" = 1'-0"

1. THERMAL CERAMICS FIREMASTER FASTWRAP XL OR PYROSCAT XL IS TESTED TO ASTM E2336 AND UL LISTED PER HNKT G18 TO PROVIDE ZERO CLEARANCE TO COMBUSTIBLES AND TO PROVIDE A 1- OR 2- HOUR ENCLOSURE. THROUGH PENETRATIONS FIRESTOP SYSTEMS ARE TESTED IN ACCORDANCE WITH ASTM E 814 (UL 1479). ICC-ES APPROVAL PER REPORT ESR 2213 OR ESR 2832.

2. COMPLIANT TO THE FOLLOWING CODES:
NFPA 96
INTERNATIONAL MECHANICAL CODES
UNIFORM MECHANICAL CODE
CALIFORNIA MECHANICAL CODE

3. INSULATION APPLIED IN TWO LAYERS WITH TIGHT COMPRESSION JOINT ON BOTH LAYERS AT ALL JOINTS.

4. MINIMUM 16 GAUGE CARBON STEEL (OR 18 GAGE STAINLESS STEEL) RECTANGULAR OR ROUND GREASE EXHAUST DUCT

5. INSTALL UL LISTED AND LIQUID TIGHT THERMAL CERAMICS FASTDOOR XL ACCESS DOORS AT ALL CHANGES IN DIRECTION AND AT MINIMUM EVERY 20 FT ON HORIZONTAL RUNS.

6. SUPPORT HANGER SYSTEMS DO NOT NEED TO BE WRAPPED PROVIDED THE HANGER RODS ARE MINIMUM OF 3/8 IN. DIAMETER AND SUPPORTS ARE MINIMUM 2 X 2 X 1/8 IN. STEEL ANGLE OR SMACNA EQUIVALENT SUPPORT SYSTEM.

7. THERMAL CERAMICS DUCT WRAP SHALL BE INSTALLED DIRECTLY ONTO THE DUCT AND APPLIED FROM THE HOOD CONNECTION TO THE CONNECTION TO THE FAN.

8. THERMAL CERAMICS DUCT ENCLOSURE SYSTEM SHALL BE INSTALLED IN STRICT ACCORDANCE WITH MANUFACTURERS INSTRUCTIONS AND UL LISTINGS.

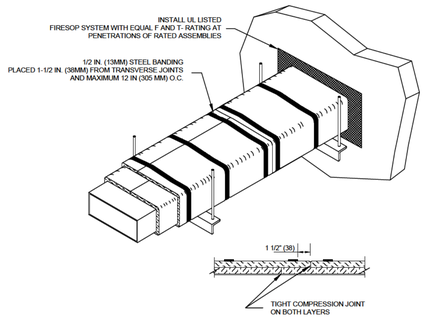

FIRE-RATED ENCLOSURE FOR
GREASE DUCTS PER ASTM E2336

Morgan ThermalCeramics

ENTIRE TYPE I EXHAUST DUCT SHALL BE INSULATED IN TWO LAYERS OF MORGAN THERMAL CERAMICS PYROSCAT DUCT WRAP OR FAST WRAP XL OR SIMILAR GREASE DUCT ENCLOSURE PER ASTM E2336 AND 2023 FMC 506.3.11.

FIRE WRAP SPECIFICATION

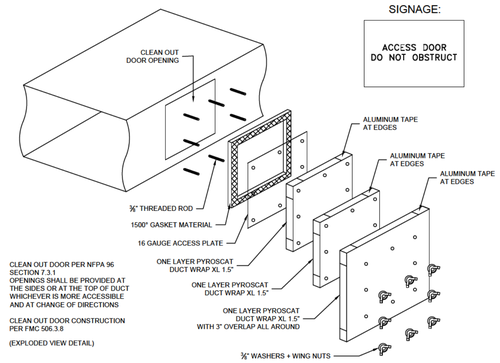

FIELD MADE CLEAN OUT DOOR DETAIL

MIN. 1-1/2" CLEARANCE BETWEEN EDGE OF CLEAN OUT DOOR AND BOTTOM EDGE OF DUCT SIDES.
INSTALLED FOR ACCESS AT EACH CHANGE IN DIRECTION AND MIN. EVERY 12 FT HORIZONTAL AND EVERY FLOOR VERTICALLY PER NFPA 96

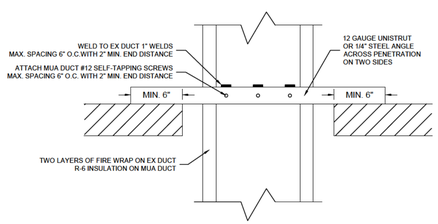

VERTICAL DUCT SUPPORT

TYPE I HOOD CLEARANCE NOTES:

THE KITCHEN HOOD SHALL MAINTAIN CLEARANCE FROM LIMITED-COMBUSTIBLES AND COMBUSTIBLE MATERIALS. INSTALLATION SHALL BE DONE IN COMPLIANCE WITH THE LATEST EDITION OF NFPA 96 AND LOCAL CODES BY THE AHJ.

NO COMBUSTIBLE BUILDING MATERIALS SUCH AS WOOD, PVC, FRP, PAPER-FACED INSULATION, OR ANY PRODUCT WITH A FLAME SPREAD INDEX GREATER THAN 25 SHALL BE WITHIN 18 INCHES OF COOKING EQUIPMENT OR TYPE I HOOD AND ITS EXHAUST DUCT.

NO LIMITED-COMBUSTIBLE MATERIALS SUCH AS GYPSUM BOARD, ROCK WOOL BATTING, ROOF INSULATION BOARD, OR ANY PRODUCT CONTAINING LESS THAN 10% MATERIAL WITH A FLAME SPREAD INDEX GREATER THAN 25 SHALL BE WITHIN 3 INCHES OF COOKING EQUIPMENT OR TYPE I HOOD AND ITS EXHAUST DUCT.

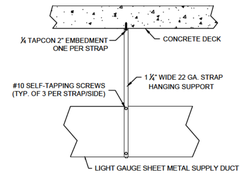

NOTE: HANGING SUPPORT EVERY 6 FT OF DUCT
ONE STRAP EACH SIDE OF DUCT

MUA DUCT HANGING

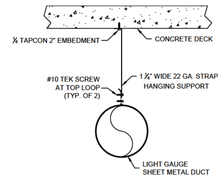

NOTE: HANGING SUPPORT EVERY 6 FT OF DUCT
SUPPORT AT EACH ADJUSTABLE ELBOW

MUA PIPE HANGING

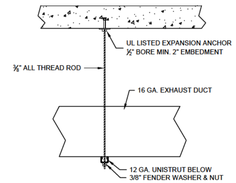

NOTE: HANGING SUPPORT EVERY 6 FT OF DUCT
EVERY 5 FT OF DUCT WITH FIRE WRAP

EXHAUST DUCT HANGING

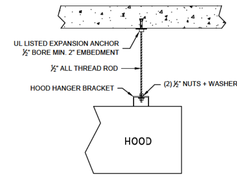

NOTE: MINIMUM OF 4 HANGERS PER HOOD
HANGER AT EACH CORNER

HOOD HANGING

SECTION VIEW – KITCHEN VENTILATION

SCALE: ¼" = 1' - 0"

GRAPHIC SCALE
0 FEET 2 4 6 8

INSTALLATION SHALL COMPLY WITH NFPA 96 FBC–M – SMACNA ASHRAE – AMCA

HOOD PLAN
SHEET:
H–6

WHEN DIGITALLY SIGNED
Printed copies of this document are not considered signed and sealed and the signature must be verified only with the electronic copies.

RODNEY L. FRITZ, P.E.
AIR FLOW CONSULTANTS, LLC
FL. LICENSE # PE 50003
8474 SW 42 CT.
DAVIE, FL 33328
PHONE: 954-541-4592
EMAIL: rfritz@airflowconsult.com

CAPTIVE AIRE HOODS ARE BUILT IN COMPLIANCE WITH

NFPA #96
NFPA #17A
NSF

UL710 STANDARDS
ETL LISTED 3054804-001

FOR QUESTIONS

PLEASE CONTACT
ADVANCED HOOD SYSTEMS
12250 WILES ROAD
CORAL SPRINGS, FL 33076
PHONE: (954) 551-9370 or (954) 937-0296
REG140@CAPTIVEAIRE.COM
STATE LIC# CSC1110285

RODNEY L FRITZ LICENSE No. 0050003 STATE OF FLORIDA PROFESSIONAL ENGINEER

DATE:_____

ADVANCED HOOD SYSTEMS

JOB	FORT LAUDERDALE POLICE HEADQUARTERS		
LOCATION	1300 W. BROWARD BLVD., FT. LAUDERDALE, FL		
DATE	4/4/24	JOB #	6544961
DWG #	1696	DRAWN BY	TMH
REV.		SCALE	As noted

CAM 04-0670
Exhibit 1
Page 198 of 288

Moss & Associates LLC
2101 N. Andrews Avenue
Fort Lauderdale, Florida 33311
P: (954) 524-5678

Project: B372302 Fort Lauderdale Police Headquarters
1300 W Broward Blvd
Fort Lauderdale, Florida 33312

Submittal #3.0 - Cafeteria Servicing 2002 Advance Hood Systems Kitchen Hood Exhaust & Makeup Air System Shop Drawing

Revision	0	**Submittal Manager**	Angel Lopez (Moss & Associates LLC - FLL)
Status	Submitted by GC	**Date Created**	May 8, 2024
Issue Date	May 8, 2024	**Spec Section**	Note: No Specification Section In Project Manual For Cafeteria Kitchen Equipment. [Moss / MPG / 05/08/24]
Responsible Contractor	Moss & Associates LLC - FLL	**Received From**	Michael Perez-Gurri (Moss & Associates LLC - FLL)
Received Date	May 8, 2024	**Submit By**	
Final Due Date	May 22, 2024	**Lead Time**	
Sub Job		**Cost Code**	
Location	HQ LEVEL 2>CAFETERIA SERVING 2002	**Type**	Shop Drawing
Approvers	Ambar Escoto Hernandez (AECOM), Evan Siegel (AECOM), Yanique Virgo (AECOM)		
Ball in Court	Angel Lopez (Moss & Associates LLC - FLL)		
Distribution	Ambar Escoto Hernandez (AECOM), Angel Lopez (Moss & Associates LLC - FLL), Captain Adam Solomon (Fort Lauderdale Police Department), David Lovern (City of Fort Lauderdale), Evan Siegel (AECOM), Kristin Thompson (City of Fort Lauderdale), Matthew Kane (Moss & Associates LLC - FLL), Michael Perez-Gurri (Moss & Associates LLC - FLL), Robert Buscemi (City of Fort Lauderdale), Yanique Virgo (AECOM)		
Description	This Shop Drawing is not being submitted under a Specification Section as there is currently no Specification Section In Project Manual for Cafeteria Kitchen Equipment at the time of the submission of this shop drawing to the Design Team for review. This Cafeteria Servicing 2002 Kitchen Hood Exhaust & Makeup Air System Shop Drawing is to be reviewed concurrently with RFI-510 & RFI-515 which are both pending a final response at the time of this shop drawing submission to the Design Team for review.		

Submittal Workflow

Name	Sent Date	Due Date	Returned Date	Response	Attachments
General Information Attachments					
Angel Lopez		May 8, 2024		Pending	
Ambar Escoto Hernandez		May 22, 2024		Pending	
Evan Siegel		May 22, 2024		Pending	
Yanique Virgo		May 22, 2024		Pending	

The design consultant cannot review this submittal until we have an NTP from the client to proceed with the design of the Cafeteria

CONSTRUCTION MANAGER
MOSS & ASSOCIATES
Fort Lauderdale Police Headquarters - Job No. B372302
Submittal No. 3.0 (No Spec Section In Project Manual)
☐ Reviewed
☑ Reviewed as Noted
☐ Reviewed as Noted - Resubmit
☐ Not Approved - Resubmit
Review of this submittal is for general conformance with contract requirements. Subcontractor/Vendor is responsible for dimensions, quantities, & coordination with other trades. Approval does not relieve Subcontractor/Vendor of his responsibilities to fully comply with the contract documents.
By: Michael Perez-Gurri (MPG) Date: 05/08/24
Refer To Moss Submittal Coversheet For Reviewed As Noted Comments Under Description.

HOOD INFORMATION - JOB#6544961

HOOD NO	TAG	MODEL	MANUFACTURER	LENGTH	MAX COOKING TEMP	TYPE	APPLIANCE DUTY	DESIGN CFM/FT	TOTAL EXH CFM	EXHAUST PLENUM RISER(S) WIDTH	LENG	HEIGHT	DIA	CFM	VEL	SP	TOTAL SUPPLY CFM	HOOD CONSTRUCTION	HOOD CONFIG END TO END	ROW
1	H-1	5424 AH-ND-2-PSP-F	ADVANCED HOOD	11' 0"	600 DEG	I	HEAVY	200	2200	10"	20"	4"		2200	1584	-0.500"	1760	430 SS WHERE EXPOSED	ALONE	ALONE

HOOD INFORMATION

HOOD NO	TAG	FILTER(S) TYPE	QTY	HEIGHT	LENGTH	EFFICIENCY @ 7 MICRONS	LIGHT(S) QTY	TYPE	WIRE GUARD	UTILITY CABINET(S) LOCATION	SIZE	FIRE SYSTEM TYPE	FIRE SYSTEM SIZE	ELECTRICAL MODEL #	SWITCHES QUANTITY	FIRE SYSTEM PIPING	HOOD HANGING WEIGHT
1	H-1	SS BAFFLE WITH HANDLES	8	20"	16"	30%	7	L55 SERIES E26	NO	LEFT	12"x54"x24"	TANK FS	4.0/4.0	SC-311110MA	1 LIGHT 1 FAN	YES	1093 LBS

HOOD OPTIONS

HOOD NO	TAG	OPTION
1	H-1	FIELD WRAPPER 18.00" HIGH FRONT, LEFT, RIGHT.
		BACKSPLASH 122.00" HIGH X 180.00" LONG 430 SS VERTICAL.
		RISER SENSOR INSTALL 6IN PLEN.
		RIGHT WIDE VERTICAL END PANEL 42" TOP WIDTH, 36" BOTTOM WIDTH, 80" HIGH INSULATED 430 SS.
		LEFT WIDE VERTICAL END PANEL 42" TOP WIDTH, 36" BOTTOM WIDTH, 80" HIGH INSULATED 430 SS.

PERFORATED SUPPLY PLENUM(S)

HOOD NO	TAG	POS	LENGTH	WIDTH	HEIGHT	TYPE	RISER(S) WIDTH	LENG	DIA	CFM	SP
1	H-1	Front	144"	14"	6"	MUA	12"	20"		586	0.186"
						MUA	12"	20"		586	0.186"
						MUA	12"	20"		586	0.186"

ND-2 Series with PSP Specification

The model ND-2 with PSP Accessory is a compensating canopy hood rated for all types of cooking equipment. The hood shall have the size, shape and performance specified on drawings.

The hood shall be listed for 450°F cooking surfaces at 150 CFM/ft, 600°F cooking surfaces at 200 CFM/ft, and 700°F cooking surfaces at 250 CFM/ft. The hood shall be ETL Listed as "Exhaust Hood Without Exhaust Damper".

KLEEN-GARD Filter Specification

RESEARCH PRODUCTS CORPORATION

NAFA & IKECA ASSOCIATIONS
RP CORP. FILTERS ARE BUILT IN COMPLIANCE WITH:
NFPA #96
NSF STANDARD #2
UL STANDARD #1046
INT. MECH. CODE (IMC)

CLEANABLE SURFACE UNDER KITCHEN HOOD PER NFPA 96

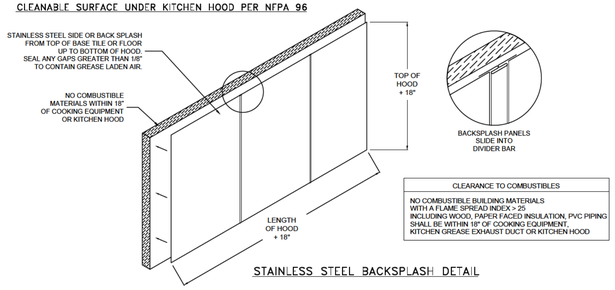

CLEARANCE TO COMBUSTIBLES

NO COMBUSTIBLE BUILDING MATERIALS WITH A FLAME SPREAD INDEX > 25 INCLUDING WOOD. PAPER FACED INSULATION, PVC PIPING SHALL BE WITHIN 18" OF COOKING EQUIPMENT, KITCHEN GREASE EXHAUST DUCT OR KITCHEN HOOD

STAINLESS STEEL BACKSPLASH DETAIL

AIR BALANCE NOTE:

TOTAL HOOD EXHAUST = 2,200 CFM
TOTAL HOOD SUPPLY = 1,760 CFM
TOTAL NET DIFFERENCE = 440 CFM

HVAC SYSTEM TO PROVIDE A MINIMUM 440 CFM OF OUTSIDE AIR FOR BALANCED BUILDING PRESSURE

KITCHEN SHALL BE NEGATIVE WITH RESPECT TO ADJACENT AREAS NOT TO EXCEED -0.02" W.C.

SCOPE OF WORK:

FURNISH AND INSTALL (1) UL710 TYPE I GREASE HOOD SYSTEM TO COMPLY WITH EIGHTH EDITION OF FLORIDA BUILDING CODE, FIRE PREVENTION, FMC 2023, AND 2021 NFPA 96, NFPA 17A, NFPA 70, NEC.

FURNISH AND INSTALL CORRESPONDING UL1978 GREASE EXHAUST DUCT OR FIELD WELDED 16 GA. GALV. AND 24 GA. GALV. MAKE-UP AIR DUCT PER PLANS TO COMPLY WITH SMACNA, ASHRAE, AMCA, IECC.

FURNISH AND INSTALL TWO LAYERS OF ASTM E2336 FIRE WRAP ON ALL GREASE DUCT PER MFGR. SPECIFICATIONS

FURNISH AND INSTALL CLEAN OUT DOORS IN GREASE DUCT AS REQUIRED PER PLAN

FURNISH AND INSTALL NEW ROOF CURB FOR (1) EXHAUST FAN AND (1) SUPPLY FAN ONTO THIRD-STORY CONCRETE ROOF. ROOFING REPAIRS BY OTHERS.

FURNISH CONTROL PANEL FOR TYPE I HOOD SEQUENCE OF OPERATION TO E.C. FOR HOOK-UP

PROVIDE CERTIFIED AABC OR NEBB TEST AND BALANCE REPORT PRIOR TO FINAL INSPECTION. DEMONSTRATE HOOD PERFORMANCE OR INTEGRITY OF TYPE I HOOD EXHAUST DUCT UPON REQUEST OF AHJ. TYPE I HOOD EXHAUST DUCT SHALL BE INSTALLED WITHOUT LEAKS AND LIQUID TIGHT. TESTING SHALL BE DONE WITH LIGHT SOURCE DURING INSTALLATION TO ENSURE THERE ARE NO HOLES OR LEAKS. SMOKE TEST CAN BE USED.

BY OTHERS: NOTED ITEMS SUCH AS ELECTRICAL SCHEMATICS, FIELD WIRING, GAS VALVES, GAS LINES, ROOM TEMP OR HOOD SENSORS, SHUNT BREAKERS, LIGHTING, POWER TO FANS, INTERCONNECTIONS, SHALL BE DONE BY CORRESPONDING TRADE INCLUDING PLUMBING, ELECTRICAL, LOW-VOLTAGE, FIRE ALARM. K-CLASS AND MULTI-HAZ FIRE EXTINGUISHERS PER NFPA 10 BY OWNER.

PERMIT, HOOK-UP, AND TEST OF FIRE SUPPRESSION SYSTEM BY OTHERS UNDER SEPARATE PERMIT BY THE LICENSE COMPANY PERFORMING THE CERTIFIED INSTALLATION

GENERAL NOTES TYPE I HOOD:

MICRO SWITCH PROVIDED FOR ELECTRICAL INTERFACE. UPON SYSTEM DISCHARGE THE FOLLOWING MUST OCCUR:
-EXHAUST AIR CONTINUES TO RUN, SUPPLY AIR SHUTS DOWN.
-ALARM (IF AVAILABLE) OR HORN STROBE MUST ANNUNCIATE.
-ALL GAS AND ELECTRIC SUPPLY TO ALL APPLIANCES AND OUTLETS WITHIN HAZARD MUST SHUT DOWN.

ALL SYSTEM PARTS TO BE APPROVED MANUFACTURER'S COMPONENTS AND INSTALLED IN COMPLIANCE WITH MANUFACTURER'S UL LISTING.

AUTOMATIC GAS SHUT-OFF VALVE TO BE LOCATED IN A SERVICEABLE POSITION NOT IN HAZARD AND OUTSIDE OF HOOD FOOT PRINT.

SUPPLY AND EXHAUST FANS ARE INTERLOCKED WITH PILOT LIGHT AND SHALL AUTO START WITH THE DETECTION OF HEAT SOURCE PER FBC (M) 507.1.1.1

NO COMBUSTIBLE BUILDING MATERIALS SHALL BE WITHIN 18" OF COOKING EQUIPMENT, TYPE I KITCHEN HOOD AND CORRESPONDING EXHAUST DUCT.

TYPE I HOOD CLEARANCE NOTES:

THE KITCHEN HOOD SHALL MAINTAIN CLEARANCE FROM LIMITED-COMBUSTIBLES AND COMBUSTIBLE MATERIALS. INSTALLATION SHALL BE DONE IN COMPLIANCE WITH THE LATEST EDITION OF NFPA 96 AND LOCAL CODES BY THE AHJ.

NO COMBUSTIBLE BUILDING MATERIALS SUCH AS WOOD, PVC, FRP, PAPER-FACED INSULATION, OR ANY PRODUCT WITH A FLAME SPREAD INDEX GREATER THAN 25 SHALL BE WITHIN 18 INCHES OF COOKING EQUIPMENT OR TYPE I HOOD AND ITS EXHAUST DUCT.

NO LIMITED-COMBUSTIBLE MATERIALS SUCH AS GYPSUM BOARD, ROCK WOOL BATTING, ROOF INSULATION BOARD, OR ANY PRODUCT CONTAINING LESS THAN 10% MATERIAL WITH A FLAME SPREAD INDEX GREATER THAN 25 SHALL BE WITHIN 3 INCHES OF COOKING EQUIPMENT OR TYPE I HOOD AND ITS EXHAUST DUCT.

TYPE I HOOD AND RELATED COMPONENTS ARE INSTALLED IN COMPLIANCE WITH FBC-M SECTIONS 506, 507, 508, 509.1

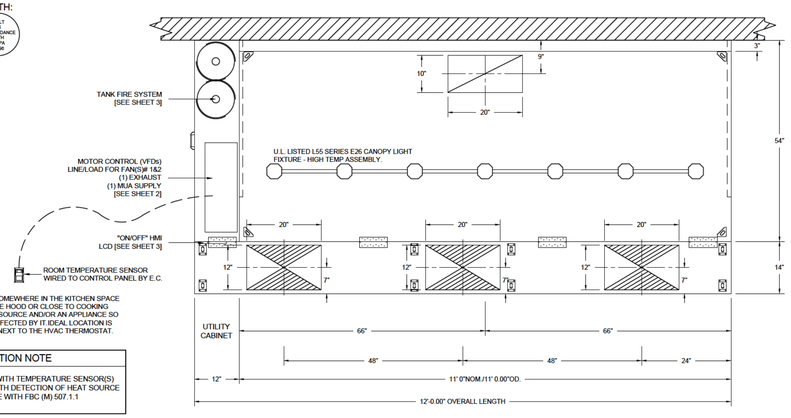

INSTALL ON WALL OR CEILING SOMEWHERE IN THE KITCHEN SPACE BUT NOT DIRECTLY NEAR THE HOOD OR CLOSE TO COOKING EQUIPMENT AWAY FROM HEAT SOURCE AND/OR AN APPLIANCE SO THAT THE READING IS NOT AFFECTED BY IT. IDEAL LOCATION IS UNDER AN HVAC RETURN OR NEXT TO THE HVAC THERMOSTAT.

OPERATION NOTE

HOOD(S) ARE PROVIDED WITH TEMPERATURE SENSOR(S) AND SHALL AUTO START WITH DETECTION OF HEAT SOURCE IN ACCORDANCE WITH FBC (M) 507.1.1

PLAN VIEW – HOOD #1 (H-1)
11' 0.00" LONG 5424AH-ND-2-PSP-F

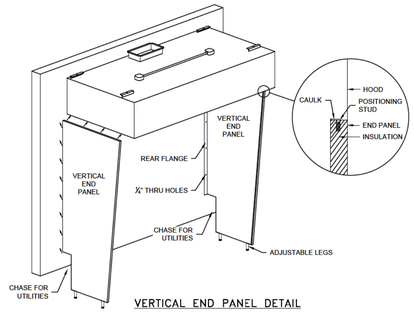

VERTICAL END PANEL DETAIL

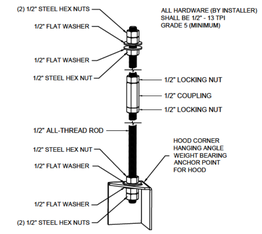

CORNER HANGING DETAIL

NOTE:
UL300 FIRE SYSTEM
UNDER SEPARATE PERMIT
BY LICENSED CONTRACTOR

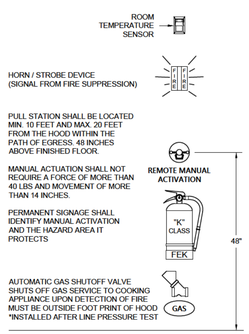

K-CLASS EXTINGUISHER MAXIMUM 30 FEET FROM HAZARD

PROVIDE A PLACARD CONSPICUOUSLY PLACED NEAR "K" CLASS FIRE EXTINGUISHER: "THE FIRE PROTECTION SYSTEM SHALL BE ACTIVATED PRIOR TO USING THE FIRE EXTINGUISHER"

FEK PER NFPA 10

NOTE: UL300 FIRE SYSTEM
UNDER SEPARATE DRAWING / PERMIT

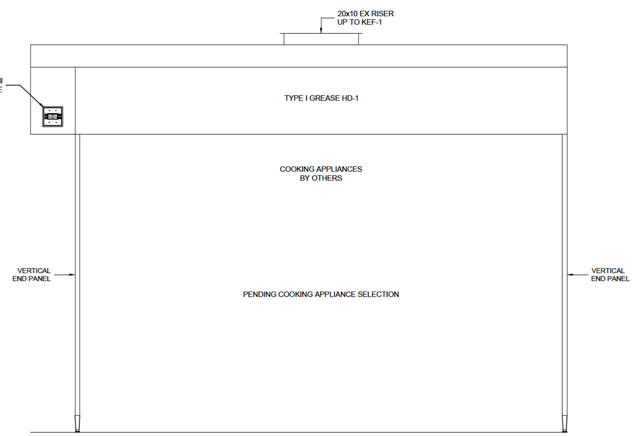

KITCHEN HOOD SHALL OVERHANG COOKING EQUIPMENT BY A MINIMUM OF 6" ON ALL OPEN SIDES

ELEVATION VIEW – HOOD #1 (H-1)
11' 0.00" LONG 5424AH-ND-2-PSP-F

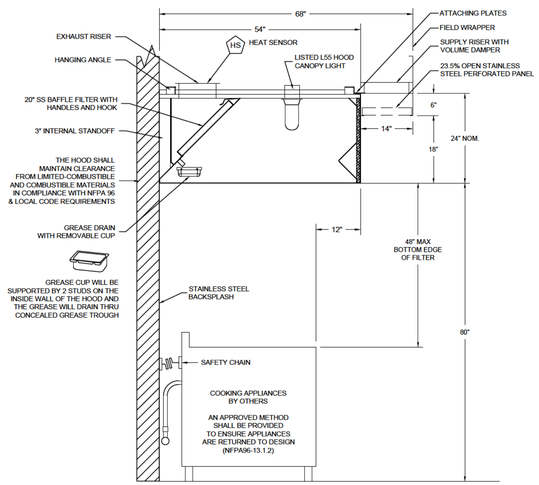

KITCHEN HOOD SHALL OVERHANG COOKING EQUIPMENT BY A MINIMUM OF 6" ON ALL OPEN SIDES

SECTION VIEW – HOOD #1 (H-1)
11' 0.00" LONG 5424AH-ND-2-PSP-F

KITCHEN HOOD DETAILS

NOT TO SCALE

INSTALLATION SHALL COMPLY WITH: NFPA 96 FBC-M – SMACNA ASHRAE – AMCA

HOOD PLAN
SHEET: H-1

WHEN DIGITALLY SIGNED
Printed copies of this document are not considered signed and sealed and the signature must be verified only with the electronic copies.

RODNEY L. FRITZ, P.E.
AIR FLOW CONSULTANTS, LLC
FL. LICENSE # PE 50003
8474 SW 42 CT.
DAVIE, FL 33328
PHONE: 954-541-4592
EMAIL: rfritz@airflowconsult.com

CAPTIVE AIRE HOODS ARE BUILT IN COMPLIANCE WITH

NFPA #96
NFPA #17A
NSF

UL710 STANDARDS
ETL LISTED 3054804-001

FOR QUESTIONS

PLEASE CONTACT
ADVANCED HOOD SYSTEMS
12250 WILES ROAD
CORAL SPRINGS, FL 33076
PHONE: (954) 551-9370 or (954) 937-0296
REG140@CAPTIVEAIRE.COM
STATE LIC# CSC1110285

RODNEY L FRITZ LICENSE No. 0050003 STATE OF FLORIDA PROFESSIONAL ENGINEER

DATE:_____

ADVANCED HOOD SYSTEMS

JOB	FORT LAUDERDALE POLICE HEADQUARTERS		
LOCATION	1300 W. BROWARD BLVD., FT. LAUDERDALE, FL		
DATE	4/4/24	JOB #	6544961
DWG #	1696	DRAWN BY	TMH
REV.		SCALE	NTS

CAM #24-0670
Exhibit 1

EXHAUST FAN INFORMATION - JOB#6544961

FAN UNIT NO	TAG	QTY	FAN UNIT MODEL #	MANUFACTURER	CFM	ESP	RPM	MOTOR ENCL	HP	BHP	PHASE	VOLT	FLA	DISCHARGE VELOCITY	WEIGHT (LBS)	SONES
1	KEF-1	1	AH-USBI18DD-RM	ADVANCED HOOD	2200	1.750	1223	ODP,PREMIUM	1.500	1.0300	3	208	6.6	1128 FPM	416	17.8

FAN #1 AH-USBI18DD-RM - EXHAUST FAN (KEF-1)

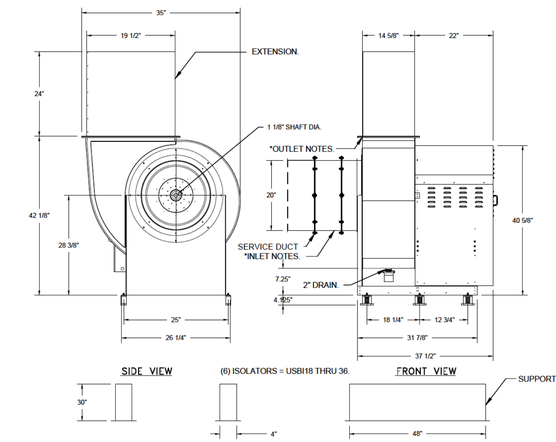

SIDE VIEW

(6) ISOLATORS = USBI18 THRU 36.

FRONT VIEW

FEATURES:

- ROOF MOUNTED FANS.
- UL705.
- UL762 AND ULC-S645 (RESTAURANT MODEL).
- HIGH HEAT OPERATION DIRECT DRIVE 350°F (176°C).
- HEAT SLINGER.
- NEMA 3R SAFETY DISCONNECT SWITCH.
- GREASE CLASSIFICATION TESTING.
- 2" DRAIN.
- MOTOR WEATHER COVER.
- FULLY SEALED SCROLL HOUSING.
- SCROLL ACCESS DOOR.
- FLANGE 1 1/4".

OPTIONS

- BI18 - INLET SERVICE DUCT CONNECTION. USED TO CONNECT TO STANDARD 20" GREASE DUCT OR FIELD WELDED DUCT. INCLUDES (2) 7" RISERS BOLTED TO STANDARD INLET RISER.
- UTILITY SET GREASE CUP.
- BI18 - 24" DISCHARGE EXTENSION.
- BI - DISCHARGE ORIENTATION VERTICAL UPPER LEFT - CW INLET SIDE.
- BI18 - INLET CONNECTION STANDARD 20" FLANGED GREASE DUCT.
- UTILITY SET - SPRING VIBRATION ISOLATORS - BI18 / EQUIVALENT SIZED UTILITY SET - INDOOR/OUTDOOR USE.
- 2 YEAR PARTS WARRANTY.

MIAMI-DADE COUNTY - RAIL INSTALLATION GUIDE

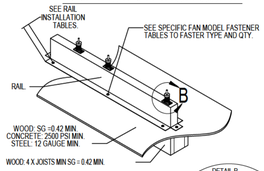

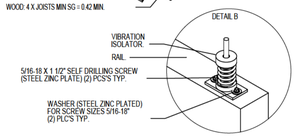

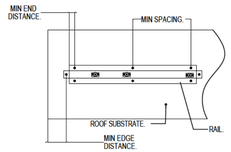

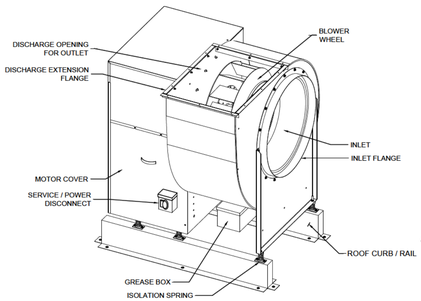

UTILITY SET EXHAUST FAN DETAIL

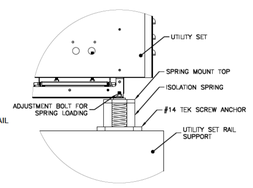

VIBRATION ISOLATION DETAIL

MIAMI-DADE NOA2 BI UTILITY SET

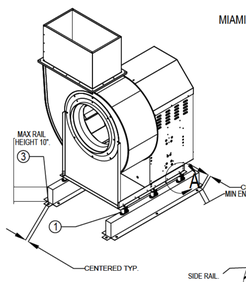

GENERAL NOTES:

1. THIS APPROVAL IS FOR THE STRUCTURAL CAPACITY AND IMPACT RATING OF THE EXTERIOR HOUSING ONLY, IT DOES NOT INCLUDE ANY INTERIOR MECHANISM OR ELECTRICAL PART.
2. THESE FANS HAVE NOT BEEN WIND TESTED FOR WIND DRIVEN RAIN TEST PER FLORIDA BUILDING CODE, TAS100 (A)-95.
3. TESTED IN ACCORDANCE TO FLORIDA BUILDING CODE TEST PROTOCOL TAS201, TAS202, TAS203.
4. TESTED FOR AREAS INCLUDING HIGH VELOCITY HURRICANE ZONES.
5. TESTED UNDER MIAMI-DADE COUNTY NOTIFICATION NUMBER ATI-08034.

INSTALLATION INSTRUCTIONS:
1. LOCATE VIBRATION ISOLATORS AS NEEDED ON THE RAIL CENTER ON THE RAIL AND SECURE WITH 5/16-18 X 1 1/2" SELF DRILLING SCREWS AND APPROPRIATE SIZED WASHERS ALL HARDWARE SHOULD BE STEEL ZINC PLATED.

2. THE VIBRATION ISOLATOR IS BOLTED TO THE FAN PER THE INSTRUCTION GUIDE SUPPLIED WITH THE ISOLATOR.

3. SECURE RAIL TO ROOF FRAMING MEMBERS BY DRILLING 1/4" DIA PILOT HOLES IN THE RAIL FLANGE AT LOCATIONS SHOWN IN THE DIAGRAM. SEE TABLE BELOW FOR FASTENER TYPE AND QTY.

DESIGN PRESSURE: +112.5 / -112.5 PSF
LARGE MISSILE IMPACT RESISTANT

INSTALLATION FASTENER TYPES

	WOOD (SG = 0.42 MIN.)	STEEL (12 GAUGE MIN.)	CONCRETE (2500 PSI MIN. CRACKED CONCRETE)
FASTENER	3/8" DIA. ZINC PLATED LAG BOLT	1/4"-14 DRIL-FLEX SELF DRILLING SCREW	3/8" DIA. SS HILTI KWIK BOLT TZ EXPANSION ANCHOR
MINIMUM THREAD PENETRATION	2-5/16"	12 GAUGE	2-5/16
MINIMUM EDGE DISTANCE	1-1/2"	3/8"	3"
MINIMUM END DISTANCE	2-5/8"	3/8"	4"
MINIMUM SPACING	1-1/2"	3/4"	7"

INSTALLATION FASTENER QTY

	WOOD			STEEL			CONCRETE		
FAN MODEL	LONG SIDE	SHORT SIDE	TOTAL	LONG SIDE	SHORT SIDE	TOTAL	LONG SIDE	SHORT SIDE	TOTAL
BI18	3	1	8	2	1	6	2	1	6

MIAMI-DADE NOA2 A-SERIES SUPPLY FANS

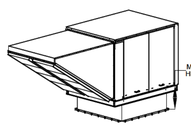

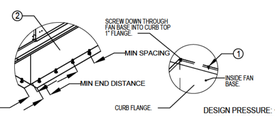

General Notes:

1. This approval is for the structural capacity and impact rating of the exterior housing only; it does not include any interior mechanism or electrical part.
2. These fans have not been wind tested for Wind Driven Rain Test per Florida Building Code, TAS100 (A)-95.
3. Tested in accordance to Florida Building Code test protocol TAS201, TAS202, TAS203.
4. Tested for areas including high velocity hurricane zones.
5. Tested under Miami-Dade County Notification number ATI-08034.

Installation Instructions:

1. SECURE FAN BASE TO TOP OF CURB USING 1/4-14 X 1" ZINC PLATED STEEL SELF DRILLING SCREWS (A307 OR BETTER) THROUGH FAN BASE. SEE TABLE BELOW FOR QTY.

2. SECURE CURB TO ROOF FRAMING MEMBERS BY DRILLING 1/4" DIA PILOT HOLES IN CURB AT LOCATION SHOWN IN BOTTOM LEFT DIAGRAM. SEE TABLE BELOW FOR FASTENER TYPE AND QTY.

DESIGN PRESSURE: +30.0 / -130.0 PSF
LARGE MISSILE IMPACT RESISTANT

INSTALLATION FASTENER TYPES

	Fan To Curb	Wood (SG = 0.42 Min.)	Steel (12 Gauge Min.)	Concrete (2500 psi Min. Cracked Concrete)
Fastener	1/4"-14 x 1" Self Drilling Screw (A307 OR BETTER)	3/8" Dia. Zinc Plated Lag Bolt	1/4"-14 Dril-Flex Self Drilling Screw	3/8" Dia. SS Hilti Kwik Bolt TZ Expansion Anchor
Minimum Thread Penetration	N/A	2"	12 Gauge	2-5/16"
Minimum Edge Distance	N/A	1-1/2"	3/8"	3"
Minimum End Distance	N/A	2-5/8"	3/8"	4"
Minimum Spacing	N/A	1-1/2"	3/4"	7"

INSTALLATION FASTENER QTY

	Curb to Fan			Wood			Steel			Concrete		
Fan Model	Long Side	Short Side	Total	Long Side	Short Side	Total	Long Side	Per Side	Total	Long Side	Short Side	Total
A1	2	2	8	4	3	14	4	3	14	3	2	10

MUA FAN INFORMATION - JOB#6544961

FAN UNIT NO	TAG	QTY	FAN UNIT MODEL #	BLOWER	HOUSING	MIN CFM	DESIGN CFM	ESP	RPM	MOTOR ENCL	HP	BHP	PHASE	VOLT	FLA	MCA	MOCP	WEIGHT (LBS)	SONES
2	KSF-1	1	AH-A1-15D-MPU	15MF-1-MOD	A1	1100	1760	0.500	1739	ODP,PREMIUM	1.500	0.8360	3	208	4.4	5.5A	15A	958	21.6

COILS - JOB#6544961

FAN UNIT NO	TAG	COIL TYPE	DESIGN CFM	COOLING										
				ENTERING DB TEMP	ENTERING WB TEMP	LEAVING DB TEMP	LEAVING WB TEMP	ENTERING FLUID TEMP	LEAVING FLUID TEMP	FLUID FLOW RATE	PERCENT GLYCOL	TOTAL CAPACITY	SENSIBLE CAPACITY	LATENT CAPACITY
2	KSF-1	DX	1760	91.0°F	78.0°F	80.8°F	73.0°F	---	---	---	---	36.0 MBH	19.1 MBH	16.9 MBH

CONDENSER DETAILS

FAN UNIT NO	TAG	FAN UNIT MODEL #	CONDENSER NO	TONNAGE	VOLTAGE	PHASE	FREQUENCY	MCA	RLA	MAX FUSE SIZE	MIN WIRE SIZE	SEER
2	KSF-1	AH-A1-15D-MPU	1	3	208-230	3 PHASE	60 HZ	14.5 AMPS	11.9 AMPS	20 AMPS	14 AWG	14

FAN #2 AH-A1-15D-MPU - SUPPLY FAN (KSF-1)
1. SUPPLY UNIT WITH 15" MIXED FLOW DIRECT DRIVE FAN IN SIZE #1 HOUSING.
2. INTAKE HOOD WITH EZ FILTERS.
3. SIDE DISCHARGE - AIR FLOW RIGHT -> LEFT.
4. MIAMI DADE IMPACT AND WIND LOAD CERTIFICATION +30 / -130 PSF - MIAMI DADE COUNTY PRODUCT CONTROL APPROVED. FLORIDA BUILDING CODE APPROVAL. ROOF MOUNT EXHAUST CURBS UP TO 20" HIGH MUST BE 18 GAUGE ALUMINIZED.
5. SUPPORT SHELL FOR SIZE 1 MODULAR PACKAGE UNIT. INCLUDES CONTROL VESTIBULE. INCLUDES CONDENSER SUPPORTS. DOES NOT INCLUDE RETURN AIR OR INLET AIR DAMPER.
6. 3 TON, SINGLE CIRCUIT MODULAR PACKAGED COOLING OPTION FOR SIZE 1 MODULAR PACKAGED UNIT INCLUDES CONDENSER, DX COIL, FILTER/DRYER KIT, THERMAL EXPANSION VALVE, R410A REFRIGERANT, AND REFRIGERANT PIPING. (1,100 TO 1,800 CFM) WHEN ORDERED WITH OPPOSITE AIRFLOW CONDENSERS ACCESS AND COIL PIPING WILL REMAIN IN STANDARD POSITION. DRAIN AND SLEDS WILL MOVE TO THE OPPOSITE SIDE. ANY OTHER CHANGE WILL REQUIRE CLI. CONDENSERS REQUIRE SEPARATE 208V, 3 PHASE POWER SUPPLY UNLESS ORDERED WITH SINGLE POINT CONNECTION. COIL = 2EJ1001N.
7. INSULATED BLOWER HOUSING SIZES 1-2 COMMERCIAL MODULAR.
8. CONTROL PACKAGE FOR MOD PACKAGE UNIT COOLING ONLY UNIT. INCLUDES AIRFLOW PROVING SWITCH, RTULINK-ACHP BOARD AND TERMINAL BLOCKS.
9. LOCKING CAPS FOR SINGLE CONDENSER UNITS. CONSISTS OF 2 LOCKING CAPS, PART# NCP-4, AND 1 KEY, PART# NC-KEY.
10. SEPARATE 120VAC WIRING PACKAGE FOR MAKE-UP AIR UNITS. OPTION MUST BE SELECTED WHEN MOUNTING VFD IN PREWIRE PANEL OR WITH DCV PACKAGE. PROVIDES SEPARATE 120VAC INPUT TO SUPPLY FAN. THIS 120V SIGNAL MUST BE RUN BY ELECTRICIAN FROM DCV TO MUA SWITCH.
11. HINGED DOUBLE WALL INSULATED DOOR ASSEMBLY (BURNER/BLOWER/MPU SECTION).
12. 2 YEAR PARTS WARRANTY.

*NOTE: SUPPLY DUCT MUST BE INSTALLED TO MEET SMACNA STANDARDS. A MINIMUM STRAIGHT DUCT LENGTH MUST BE MAINTAINED DOWNSTREAM OF UNIT DISCHARGE AS OUTLINED IN AMCA PUBLICATION 201. WHEN USING RECTANGULAR DUCTWORK, ELBOWS MUST BE RADIUS THROAT, RADIUS BACK WITH TURNING VANES. FLEXIBLE DUCTWORK AND SQUARE THROAT/SQUARE BACK ELBOWS SHOULD NOT BE USED. ANY TRANSITION AND/OR TURNS IN THE DUCTWORK WILL CAUSE SYSTEM EFFECT. SYSTEM EFFECT WILL DRASTICALLY INCREASE STATIC PRESSURE AND REDUCE AIRFLOW. DO NOT RELY ON UNIT TO SUPPORT DUCT IN ANY WAY. FAILURE TO PROPERLY SIZE DUCTWORK MAY CAUSE SYSTEM EFFECTS AND REDUCE PERFORMANCE OF THE EQUIPMENT. SUGGESTED STRAIGHT DUCT SIZE IS 20" x 20"

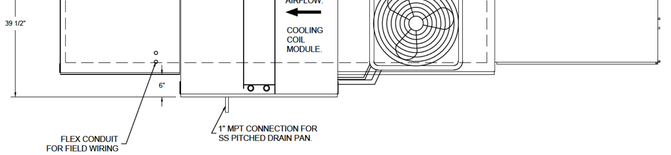

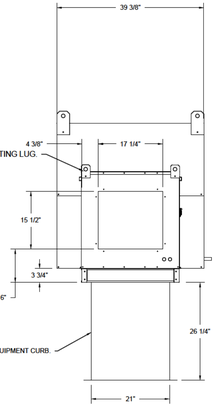

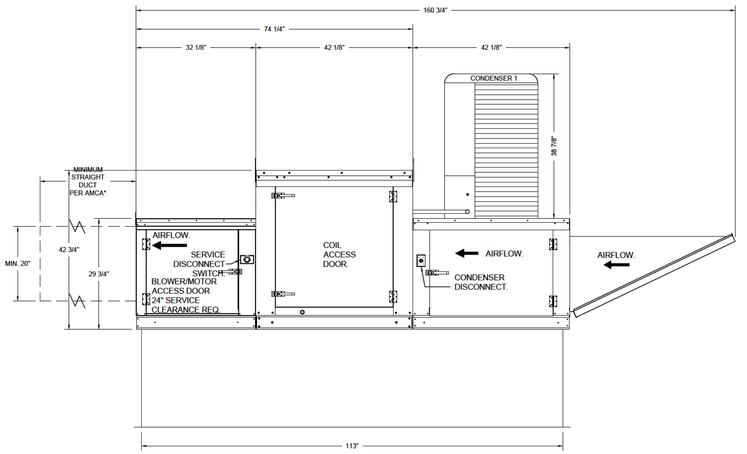

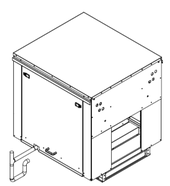

Recommended Cooling Coil Drain Trap Configuration

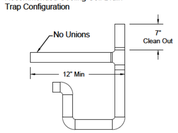

Notes:
1) 1" diameter PVC Pipe only
2) Use only low profile couplings
3) Add clean out as shown

TYPICAL CONDENSATE DRAIN DETAIL

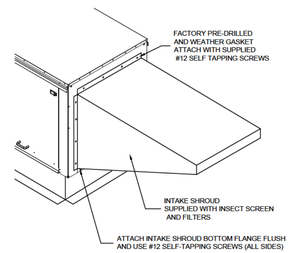

FILTERED INTAKE SHROUD DETAIL

Miami-Dade NOA

1. This approval is for the structural capacity and impact rating of the exterior housing only; it does not include any interior mechanisms or electrical part.
2. These fans have not been wind tested for Wind Driven Rain Test per Florida Building Code, TAS100 (A)-95.
3. Tested in accordance to Florida Building Code test protocol TAS201, TAS202, TAS203.
4. Tested for areas including high velocity hurricane zones.
5. Tested under Miami-Dade County Notification number ATI-08034.
6. No cables or strapping is required.
7. NOA2 - NOA# 18-0118.11 (RENEWAL NO# 21-0318.10) EXPIRES 03/ 04/ 2024

DESIGN PRESSURE: +30.0 / -130.0 PSF LARGE MISSILE IMPACT RESISTANT

VENTILATION EQUIPMENT DETAILS

NOT TO SCALE

INSTALLATION SHALL COMPLY WITH: NFPA 96 FBC-M - SMACNA ASHRAE - AMCA

HOOD PLAN

SHEET: H-2

WHEN DIGITALLY SIGNED
Printed copies of this document are not considered signed and sealed and the signature must be verified only with the electronic copies.

RODNEY L. FRITZ, P.E.
AIR FLOW CONSULTANTS, LLC
FL. LICENSE # PE 50003
8474 SW 42 CT
DAVIE, FL 33328
PHONE: 954-541-4592
EMAIL: rfritz@airflowconsult.com

CAPTIVE AIRE HOODS ARE BUILT IN COMPLIANCE WITH

NFPA #96
NFPA #17A
NSF

UL710 STANDARDS
ETL LISTED 3054804-001

FOR QUESTIONS

PLEASE CONTACT
ADVANCED HOOD SYSTEMS
12250 WILES ROAD
CORAL SPRINGS, FL 33076
PHONE: (954) 551-9370 or (954) 937-0296
REG140@CAPTIVEAIRE.COM
STATE LIC# CSC1110285

RODNEY L FRITZ LICENSE No. 0050003 STATE OF FLORIDA PROFESSIONAL ENGINEER

DATE:_____

ADVANCED HOOD SYSTEMS

JOB	FORT LAUDERDALE POLICE HEADQUARTERS		
LOCATION	1300 W. BROWARD BLVD., FT. LAUDERDALE, FL		
DATE	4/4/24	JOB #	6544961
DWG #	1696	DRAWN BY	TMH
REV.		SCALE	NTS

CAM #24-0670
Exhibit 1

ELECTRICAL PACKAGE - JOB#6544961

NO	TAG	PACKAGE #	LOCATION	SWITCHES		OPTION	FANS CONTROLLED				
				LOCATION	QUANTITY		FAN TAG	TYPE	ϕ	HP	VOLT	FLA
1		SC-311110MA	UTILITY CABINET LEFT	UTILITY CABINET LEFT	1 LIGHT	SMART CONTROLS THERMOSTATIC CONTROL W/ RELAY ON/OFF WITH SUPPLY	KEF-1	EXHAUST	3	1.500	208	6.6
				HOOD # 1	1 FAN		KSF-1	SUPPLY	3	1.500	208	4.4

JOB NO 6544961 | MODEL NUMBER SC-311110MA | JOB NAME Ft Lauderdale Police Dept | DRAWN BY | DATE 3/19/2024 | SCHEMATIC TYPE INSTALL | DWG NO ECP #1-1

DESCRIPTION OF OPERATION:
3 Phase w/ control for 1 Exhaust Fan, 1 Supply Fan, Exhaust on in Fire, Lights out in Fire, Relay On/Off with Supply Fan, Fan(s) On/Off Thermostatically Controlled. Room temperature sensor shipped loose for field installation. INVERTER DUTY 3 PHASE MOTOR REQUIRED FOR USE WITH VFD.

BREAKER PANEL TO PRIMARY CONTROL PANEL
Responsibility: Electrician
BREAKER SIZE SHOWN IS THE MAXIMUM ALLOWED

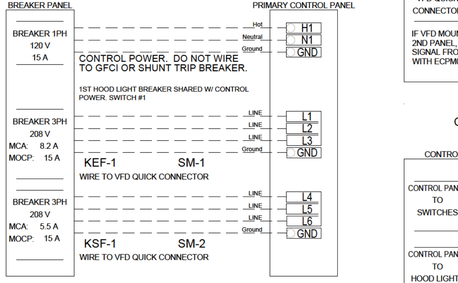

BREAKER PANEL TO FANS
Responsibility: Electrician

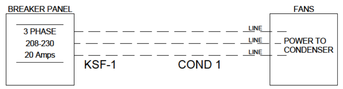

CONTROL PANEL TO FANS
Responsibility: Electrician

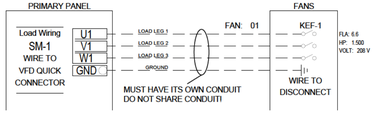

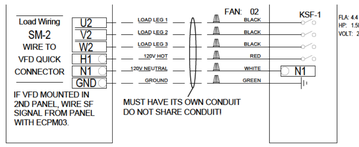

CONTROL PANEL TO ACCESSORY ITEMS
Responsibility: Electrician

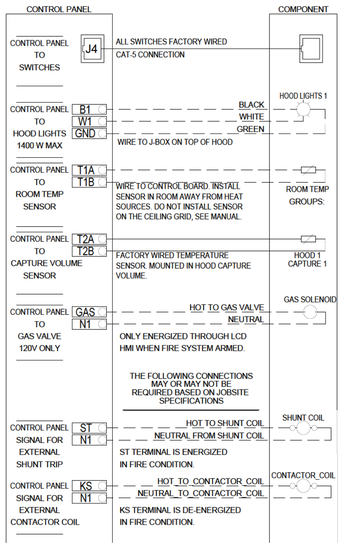

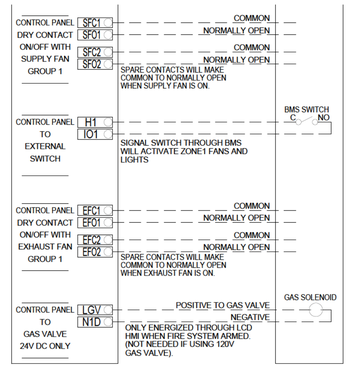

CONTROL PANEL TO FIRE SYSTEM
Responsibility: ALARM CONTRACTOR

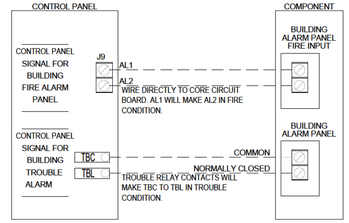

CONTROL PANEL TO FIRE SYSTEM
Responsibility: CERTIFIED INSTALLER

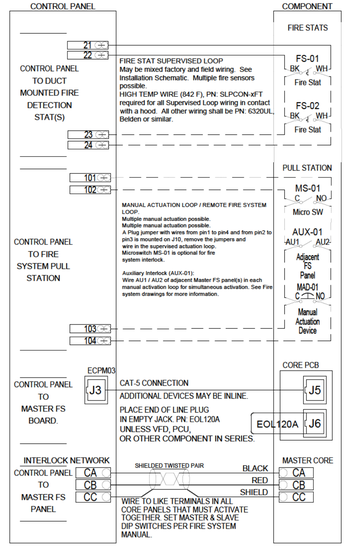

TECHNICAL SUPPORT:
Please call 1-866-784-6900
Reference Job #: 6544961

ELECTRICAL NOTES:
All Hood/Fan/Sensor/Fire System electrical connections and interconnections to be provided and installed by Electrician. Electrician to provide, install, and land wiring between hood lights, hood temp sensors, hood fire sensors, and any other component requiring an electrical connection to the Captive-Aire electrical package.
Failure by the Electrician to make ALL required electrical connections and interconnections will result in the electrical controls not working properly. Any loss or failed test as a result of electrical controls not working properly is the responsibility of the Electrician.

SEQUENCE OF OPERATION

UPON ACTIVATION OF FIRE SUPPRESSION SYSTEM:

A. ALL GAS EQUIPMENT SHALL SHUT OFF THROUGH THE USE OF A MECHANICAL SHUT-OFF VALVE. FURNISHED BY FIRE SUPPRESSION CONTRACTOR AND INSTALLED BY PLUMBING CONTRACTOR.

B. ALL ELECTRIC EQUIPMENT UNDER THE KITCHEN HOOD AND ANY OUTLETS SHALL SHUT OFF DONE WITH A SHUNT TRIP BREAKER FOR CIRCUITS AND WIRED TO MICRO-SWITCH IN FIRE SUPPRESSION SYSTEM OR SIGNAL FROM HOOD CONTROLLER. ALTERNATIVELY DONE WITH USE OF CONTACTOR ON CIRCUIT.

C. BUILDING FIRE ALARM OR STAND-A-LONE HORN & STROBE DEVICE SHALL ANNUNCIATE DONE WITH ALARM INITIATING MICRO-SWITCH IN FIRE SUPPRESSION OEM RELEASE (SEE BELOW FOR WIRING DETAILS). MUST BE CONNECTED TO BUILDING FIRE ALARM IF PRESENT PER NFPA 72.

D. SUPPLY / MAKE-UP-AIR TO THE KITCHEN HOOD SHALL SHUT OFF DONE WITH THE HOOD CONTROL PANEL INTERLOCKED WITH THE MICRO-SWITCH IN THE FIRE SUPPRESSION OEM RELEASE.

E. EXHAUST FAN SHALL TURN ON TO HELP EXTRACT THE SMOKE CREATED FROM THE FIRE SUPPRESSION SYSTEM. FIRE MODE REQUIRES EXHAUST FAN TO OPERATE CONTINUALLY AND STOP SUPPLY FAN. MICRO-SWITCH IN THE FIRE SYSTEM OEM RELEASE WILL SEND SIGNAL TO HOOD CONTROL PANEL.

ROOM TEMPERATURE SENSOR

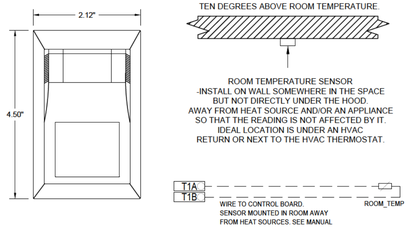

OPERATION NOTE
HOOD(S) ARE PROVIDED WITH TEMPERATURE SENSOR(S) AND SHALL AUTO START WITH DETECTION OF HEAT SOURCE IN ACCORDANCE WITH FBC (M) 507.1.1

HUMAN MACHINE INTERFACE

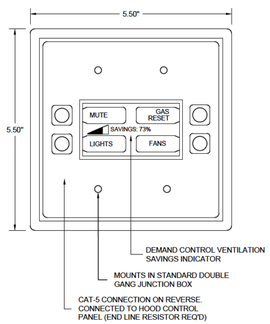

ELECTRICAL DETAILS AND SCHEMATICS
FOR REFERENCE ONLY - ALL ELECTRICAL FIELD WORK BY LICENSED E.C. UNDER SEPARATE PERMIT

TANK PROTECTION LOW-VOLTAGE DETAIL

ALARM CONTRACTOR:
1. WIRE MANUAL ACTUATION DEVICE(S), REMOTE FIRESTAT(S), CORE INTERLOCK(S), FIRE SENSOR(S) AND FIRE ALARM CONTACTS
2. COMPLETE FINAL HOOKUP OF SYSTEM
3. VERIFY FINAL FIRE SYSTEM TEST

ALARM CONTRACTOR REQUIREMENT					
ITEM	CONNECTION IN PANEL	CONNECTION ON DEVICE	VOLTAGE	AMPERAGE	COMMENTS
MANUAL ACTUATION DEVICE(S)	101 AND 104 102 AND 103	1 & 2	24 VDC	< 1.0 AMPS	WIRE MANUAL ACTUATION DEVICE TERMINAL 1 BETWEEN CORE PANEL TERMINALS 102 AND 103 WIRE MANUAL ACTUATION DEVICE TERMINAL 2 BETWEEN CORE PANEL TERMINALS 101 AND 104 JUMPER 101 TO 104 AND 102 TO 103 IF NO MANUAL ACTUATION DEVICE IS INSTALLED
MANUAL ACTUATION DEVICE COVER	N/A	N/A	N/A	N/A	MANUAL ACTUATION DEVICE COVER MUST BE INSTALLED 8" SURFACE MOUNTED USE COVER EXTENSION 51-65318
REMOTE FIRESTAT SENSOR(S)	21 AND 24 22 AND 23	BLACK AND WHITE	24 VDC	< 1.0 AMPS	WIRE FIRE SENSOR WHITE WIRES BETWEEN HOOD CORE PANEL TERMINALS 22 AND 23 WIRE FIRE SENSOR BLACK WIRE BETWEEN HOOD CORE PANEL TERMINALS 21 AND 24 HIGH TEMP (842°F) #CW04427 (WHT) & #CW04278 (BLK)WIRE OR SIMILAR ONLY IF RUN OVER TOP OF HOOD, 0716316WSB, BELDEN #8200UL OR SIMILAR PLENUM RATED WIRE. SEE FIGURE 1
FIRE ALARM CONTACT	AL1, AL2	VARIES	50V MAX (ADEQ)	UP TO 1 AMP	FIRE ALARM RELAY CONTACTS FOR BUILDING FIRE ALARM LOCATED IN THE CORE ELECTRICAL CONTROL PANEL
CORE INTERLOCK(S)	IL A, IL B, IL C	IL A, IL B, IL C	RS-485 COMMUNICATIONS SIGNAL		CORE SYSTEM (1) IL A, TO CORE SYSTEM (2) IL A, CORE SYSTEM (1) IL B, TO CORE SYSTEM (2) IL B, CORE SYSTEM (1) IL C, TO CORE SYSTEM (2) IL C. USE BELDEN# 88760 OR SIMILAR WIRE
TROUBLE CONTACT	TBC, TBL, TOK	VARIES	MAX 120 VAC	UP TO 6 AMPS	WIRE TO TBL & TBC NORMALLY OPEN CONTACT, CLOSES IN TROUBLE CONDITION
CORE COMMUNICATIONS CABLE	RJ-45 Jack	INTERNET CONNECTION	SIGNAL	<1.0 AMPS	TYPICAL CONNECTION CATS CABLE TO LOCAL AREA NETWORK VIA ETHERNET SWITCH OR WIRELESS ROUTER WITH VALID INTERNET CONNECTION

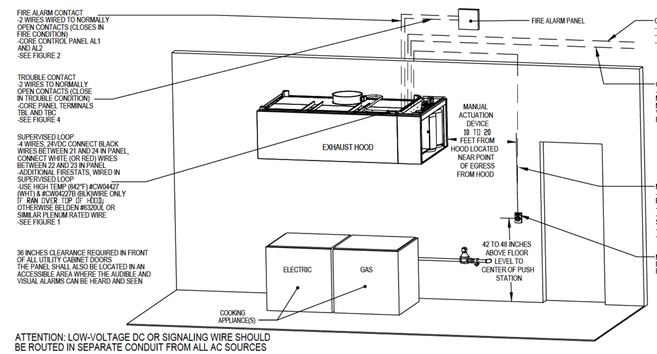

ATTENTION: LOW-VOLTAGE DC OR SIGNALING WIRE SHOULD BE ROUTED IN SEPARATE CONDUIT FROM ALL AC SOURCES

NOTE: SEE INSTALLATION, OPERATION, AND MAINTENANCE MANUAL FOR FURTHER INSTRUCTIONS

TANK PROTECTION ELECTRICAL DETAIL

ELECTRICIAN:
1. WIRE MAIN CONTROL PANEL PER INCLUDED SCHEMATIC
2. WIRE ALL FANS PER INCLUDED SCHEMATIC
3. WIRE SHUNT TRIP BREAKER (OPTIONAL)
4. WIRE UDS APPLIANCE KILL SWITCH, IF EQUIPPED (OPTIONAL)
5. WIRE GAS VALVE

ELECTRICAL CONTRACTOR REQUIREMENT					
ITEM	CONNECTION IN PANEL	CONNECTION IN DEVICE	VOLTAGE	AMPERAGE	COMMENTS
SHUNT TRIP BREAKER (OPTIONAL)	ST & N1	BREAKER COIL (A1 & A2)	120 VAC	< 4 AMPS	ST TO A1 ON SHUNT BREAKER COIL, AND NEUTRAL TO A2 ON SHUNT TRIP BREAKER COIL
CONTROL PANEL POWER	H1 & N1 + GROUND	CIRCUIT BREAKER	120 VAC	15 AMPS	CONTROL PANEL POWER MUST NOT BE RUN THROUGH SHUNT TRIP BREAKER
UDS APPLIANCE KILL SWITCH (OPTIONAL)	KTS & N1	KTS & N1	120 VAC	< 4 AMPS	KILL SWITCH TERMINALS MUST BE IN SERIES WITH OTHER KILL SWITCHES
REMOTE 120 VAC ANSUL AUTOMAN (OPTIONAL)	AU1, AU2	SOLENOID	120 VAC	< 6 AMPS	120V TO AU1, AU2 TO ANSUL ELECTRIC AUTOMAN, ANSUL SOLENOID TO NEUTRAL
GAS VALVE	LGV & N1D (IF 24 VDC) GAS & N1 (IF 120 VAC)	RED/RED/GREEN	24 VDC OR 120 VAC	< 1.0 AMPS	IF 24 VDC - 2 WIRES & GROUND, N1D TO RED, LGV TO RED, AND GREEN TO GROUND IF 120 VAC - 2 WIRES & GROUND GAS TO RED, N1 TO RED, AND GREEN TO GROUND
120V STANDALONE HORNSTROBE DEVICE	ST & N1	CIRCUIT BREAKER	120 VAC	< 4 AMPS	ONLY USE WHEN NO FIRE ALARM IS PRESENT, ST & N1 TO 120V HORNSTROBE DEVICE

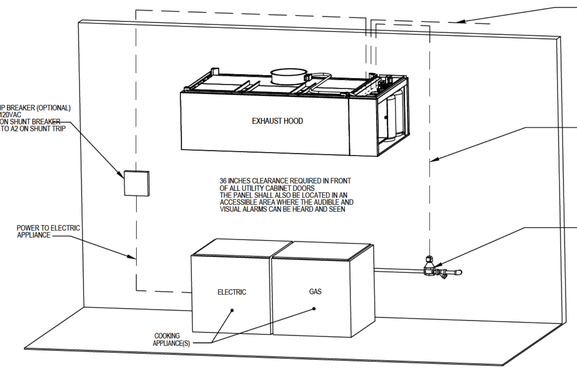

TANK IOM MANUAL
JANUARY 2024 REV. 24

NOTE: SEE INSTALLATION, OPERATION, AND MAINTENANCE MANUAL FOR FURTHER INSTRUCTIONS

INSTALLATION SHALL COMPLY WITH: NFPA 96 -- FBC-M -- SMACNA -- ASHRAE -- AMCA

HOOD PLAN SHEET: H-3

CAPTIVE AIRE HOODS ARE BUILT IN COMPLIANCE WITH
NSF NFPA ETL
NFPA #96
NFPA #17A
NSF
UL710 STANDARDS
ETL LISTED 3054804-001

FOR QUESTIONS
PLEASE CONTACT
ADVANCED HOOD SYSTEMS
12250 WILES ROAD
CORAL SPRINGS, FL 33076
PHONE: (954) 551-9370 or (954) 937-0296
REG140@CAPTIVEAIRE.COM
STATE LIC# CSC1110285

WHEN DIGITALLY SIGNED
Printed copies of this document are not considered signed and sealed and the signature must be verified only with the electronic copies.

RODNEY L. FRITZ, P.E.
AIR FLOW CONSULTANTS, LLC
FL. LICENSE # PE: 50003
8474 SW 42 CT.
DAVIE, FL 33328
PHONE: 954-541-4592
EMAIL: rfritz@airflowconsult.com

RODNEY L FRITZ LICENSE No. 0050003 STATE OF FLORIDA PROFESSIONAL ENGINEER
DATE:_____

ADVANCED HOOD SYSTEMS

JOB	FORT LAUDERDALE POLICE HEADQUARTERS		
LOCATION	1300 W. BROWARD BLVD., FT. LAUDERDALE, FL		
DATE	4/4/24	JOB #	6544961
DWG #	1696	DRAWN BY	TMH
REV.		SCALE	NTS

CAM #24-0670
Exhibit 1

NET PRESSURE SPACE	HVAC ADJACENT SET O/A	HVAC KITCHEN SET O/A	HVAC BATHROOM EXHAUST	TOTAL HOOD KITCHEN VENTILATION EXHAUST	TOTAL HOOD KITCHEN VENTILATION SUPPLY
+ 160 CFM	+ 600 CFM	+ 200 CFM	- 200 CFM	- 2,200 CFM	+ 1,760 CFM

KITCHEN TO ADJACENT PRESSURE DIFFERENCE
- 240 CFM

**DIAGRAM IS RECOMMENDED O/A VALUES
SEE MECHANICAL PLANS FOR ACTUAL O/A SCHEDULE

AIR BALANCE DIAGRAM

*NOTE: NEGATIVE PRESSURE IN KITCHEN SHALL NOT TO EXCEED .02" WG

EXHAUST DUCT VELOCITY CALCULATIONS
TYPE I GREASE HOOD

TOTAL EXHAUST CFM = 2,200

VELOCITY = CFM / AREA (FT)
EXHAUST DUCT SIZE = 14x14
AREA = 14x14/144 = 1.36 SQ FT
VELOCITY =
2,200/1.36 SQ FT = 1,618 FPM

HVAC DESIGN REQUIRES:	YES	NO
FIRE DAMPER(S)		●
SMOKE DETECTOR(S)		●
FIRE RATED ENCLOSURE	●	
FIRE RATED ROOF/FLOOR CEILING ASSEMBLY		●
FIRE STOPPING		●
SMOKE CONTROL		●

DUCT SIZING NOTE:
GREASE EXHAUST DUCT HAS BEEN SIZED TO MAINTAIN AN AIR VELOCITY AT 1500 FPM. SUPPLY DUCT HAS BEEN SIZED TO MAINTAIN AN AIR VELOCITY AT 1000 FPM. ANY MODIFICATIONS TO THE EXHAUST OR SUPPLY DUCT, INCLUDING OFFSETS / TRANSITIONS MUST MAINTAIN THE SAME SQUARE AREA.

A x B = C (SQ AREA)
C ÷ B = A

GENERAL CONSTRUCTION NOTES:
A. METAL STUD WALL WITH DRYWALL OR CONCRETE BOARD TO COMPLY WITH NFPA 96

B. GRIDSTONE OR SIMILAR LAY-IN ACOUSTIC CEILING PANELS WITH DRYWALL & CLEANABLE SURFACE TO COMPLY WITH USDA AND NFPA 96

C. CONCRETE EXTERIOR WALLS WITH CMU AND STEEL REINFORCED STRUCTURE

D. CONCRETE COLUMN AND CONCRETE BEAM WITH CONCRETE SLAB ABOVE

AIR BALANCE NOTE:
TOTAL HOOD EXHAUST = 2,200 CFM
TOTAL HOOD SUPPLY = 1,760 CFM
TOTAL NET DIFFERENCE = 440 CFM

HVAC SYSTEM TO PROVIDE A MINIMUM 440 CFM OF OUTSIDE AIR FOR BALANCED BUILDING PRESSURE

KITCHEN SHALL BE NEGATIVE WITH RESPECT TO ADJACENT AREAS NOT TO EXCEED -0.02" W.C.

DUCT ROUTING & VENTILATION NOTE:
HOOD SYSTEM IS MULTI-STORY WITH EXHAUST DUCT AND MAKE-UP AIR DUCT ROUTED UP TO ROOF MOUNT EQUIPMENT ABOVE KITCHEN AREA. INSTALL SHALL COMPLY WITH EIGHTH EDITION 2023 FBC, FMC, 2021 NFPA 96

COMBUSTIBLE BUILDING MATERIALS NOTE:
NO BUILDING COMBUSTIBLES SHALL BE WITHIN 18" OF COOKING EQUIPMENT, KITCHEN EXHAUST DUCT, EXHAUST PCU, EXHAUST FAN, OR KITCHEN HOOD OR WITHIN 3" OF LIMITED COMBUSTIBLES PER NFPA 96.

GREASE EXHAUST DUCT INSULATION NOTE:
ENTIRE TYPE I EXHAUST DUCT SHALL BE INSULATED IN TWO LAYERS OF MORGAN THERMAL CERAMICS PYROSCAT DUCT WRAP OR FAST WRAP XL OR SIMILAR GREASE DUCT ENCLOSURE PER ASTM E2336 AND 2023 FMC 506.3.11.

MAKE-UP AIR SUPPLY DUCT INSULATION NOTE:
CONDITIONED OR TEMPERED OUTSIDE AIR SUPPLY DUCT SHALL BE INSULATED WITH MINIMUM R-6 IN UNCONDITIONED SPACES AND MINIMUM R-12 WHERE DUCT IS LOCATED OUTSIDE THE BUILDING PER ASHRAE 90.1 AND IECC.

GENERAL NOTES:
1. DRAWINGS ARE DIAGRAMMATICAL IN NATURE: DO NOT SCALE FOR EXACT LOCATIONS. THESE DRAWINGS REPRESENT EXISTING CONDITIONS BASED ON PREVIOUS DRAWINGS AND SITE OBSERVATIONS. CONTRACTOR IS RESPONSIBLE FOR FIELD VERIFICATION OF ALL ACTUAL CONDITIONS.
2. ELECTRICAL HOOK-UP TO MOTOR CONTROLS, MOTOR DISCONNECT, FAN SWITCHES, RELAYS, FINAL TERMINATION, ROTATION VERIFICATION, ETC. SHALL ALL BE DONE BY OTHERS (STATE LICENSED E.C.)
3. FIRE CHASE BY OTHERS IF IT SHALL BE REQUIRED. ANY REQUIRED ACCESS DOORS IN SUCH RATED FIRE CHASE SHALL BE PROVIDED AND INSTALLED BY OTHERS.
4. WRITTEN MEASUREMENTS HAVE PRECEDENCE OVER SCALE.
5. PROVIDE CLEANOUTS IN GREASE EXHAUST DUCT AS INDICATED TO ALLOW CLEANING AT ALL BENDS AND HORIZONTAL RUNS.
6. GREASE EXHAUST DUCT SHALL BE MIN. 16 GA. CARBON STEEL WITH OR WITHOUT GALVANIZED ZINC COATING OR MIN. 18 GA. 3-SERIES STAINLESS-STEEL.
7. GREASE EXHAUST DUCT SEAMS AND JOINTS SHALL HAVE A LIQUID TIGHT CONTINUOUS EXTERNAL WELD OR A LISTED UL 1978 FACTORY BUILT "BOLT-TOGETHER" DUCT CAN ALTERNATIVELY BE USED AND INSTALLED PER MANUFACTURER.
8. INTERNAL WELDING OF GREASE EXHAUST DUCT OR CONNECTIONS SHALL BE PERMITTED, PROVIDED THE JOINT IS FORMED OR GROUND SMOOTH AND ACCESSIBLE FOR INSPECTION.
9. HORIZONTAL GREASE EXHAUST DUCT SHALL SLOPE BACK TO HOOD ONE QUARTER UNIT VERTICALLY FOR EVERY TWELVE UNITS HORIZONTAL AT A MINIMUM. CHECK WITH LOCAL CODE AND FOR LONG HORIZONTAL RUNS EXCEEDING 75 FEET.
10. GREASE EXHAUST DUCT INSTALLATION SHALL NOT CREATE A GREASE TRAP OR OBSTRUCTION IN FLOW OF MORE THAN ONE QUARTER INCH.
11. GREASE EXHAUST DUCT CHANGE IN DIRECTION SHALL HAVE A MIN. 3" RADIUS THROAT AND CORRESPONDING RADIUS CHEEK AS SHOWN. NO TURNING VANES, NON-LISTED VOLUME DAMPERS, OR FIRE DAMPERS SHALL OBSTRUCT THE FLOW OF GREASE LADEN AIR.
12. COOKING EQUIPMENT, TYPE I HOOD AND GREASE EXHAUST DUCT TO BE PROTECTED FROM COMBUSTIBLES PER NFPA 96 (2021) AND LOCAL CODE.
13. MUA DUCT SHALL BE MIN. 24 GA. CARBON STEEL GALVANIZED ZINC COATING WITH PITTSBURGH SEAM, OR MIN. 26 GA. GALV. SNAP-LOCK PIPE, CONSTRUCTED PER ASHRAE & SMACNA STANDARDS, AND SEALED TO PREVENT LEAKAGE.
14. CONDITIONED MUA DUCT WHICH CONTAINS TEMPERED AIR OR IS INSTALLED IN SUCH A PLACE WHERE THE SUPPLYING AIR IS BELOW THE DEW POINT TEMPERATURE, THEN A MINIMUM R-6 INSULATION SHALL BE USED IN UNCONDITIONED SPACES AND MINIMUM R-12 INSULATION WHERE THIS DUCT IS LOCATED OUTSIDE THE BUILDING PER ASHRAE 90.1 AND IECC.
15. MANUAL VOLUME DAMPERS SHALL BE INSTALLED IN ALL SUPPLY BRANCH DUCTS AS CLOSE TO MAIN DUCT AS POSSIBLE AND WITHIN ACCESS. EXCEPTION: WITHIN 3 FEET OF MUA COLLAR WITH OBD.
16. SUPPLY AIR CHANGE IN DIRECTION SHALL HAVE MIN. 6" RADIUS THROAT AND CORRESPONDING RADIUS CHEEK AS SHOWN. ANY SQUARE CHEEK SHALL REQUIRE TURNING VANES.
17. KITCHEN SHALL BE BALANCED TO BE NEGATIVE WITH RESPECT TO ADJACENT AREAS NOT TO EXCEED 0.02" WATER COLUMN.

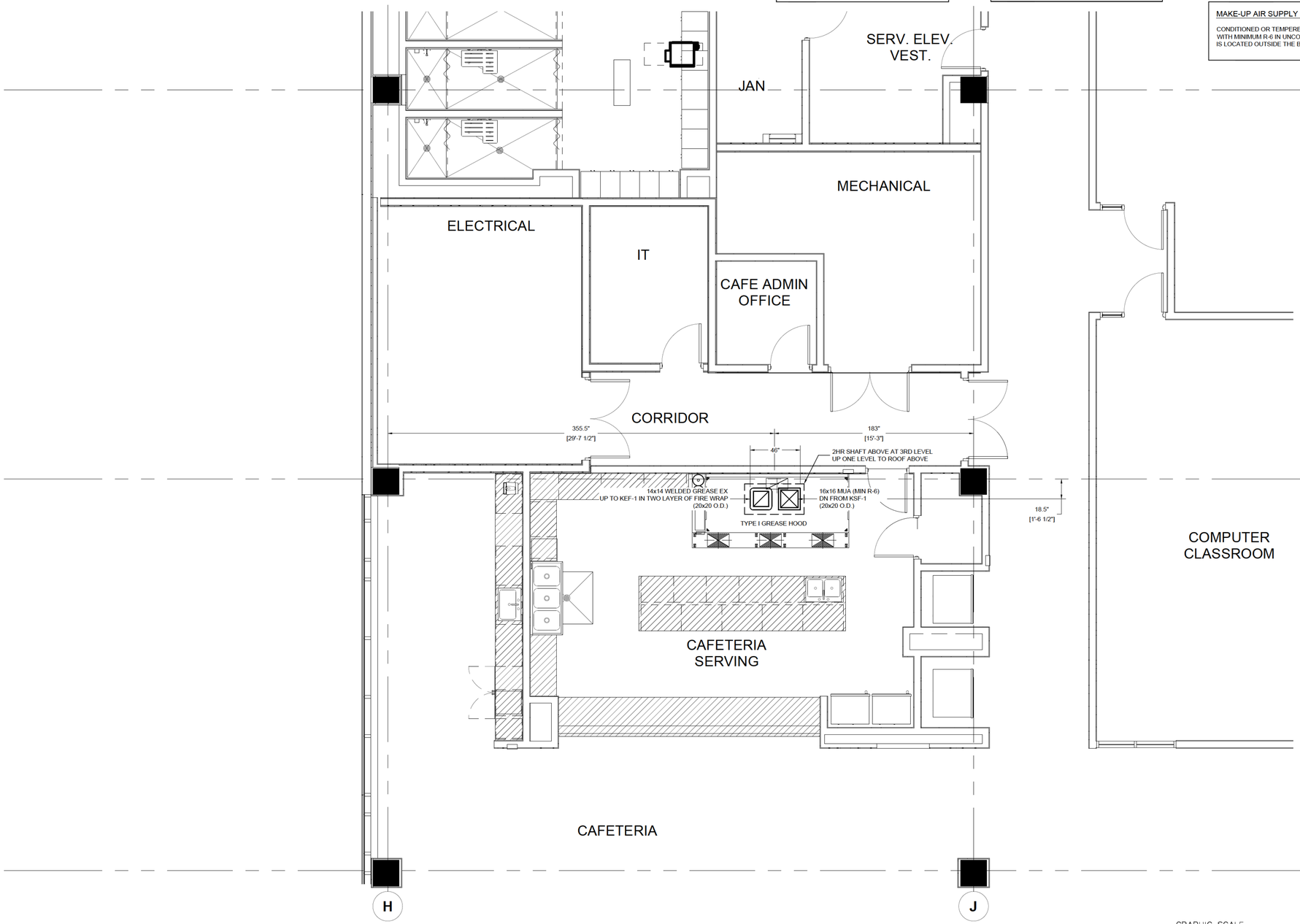

PLAN VIEW – KITCHEN VENTILATION 2ND LEVEL
SCALE: ⅛" = 1' - 0"

GRAPHIC SCALE
0 FEET 2 4 6 8

INSTALLATION SHALL COMPLY WITH NFPA 96 FBC-M – SMACNA ASHRAE – AMCA

HOOD PLAN SHEET: H-4

% CLEAN OUT DOOR SYMBOL

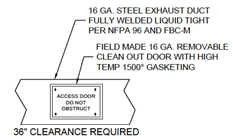

CLEAN OUT DOOR INSTALL ON SIDES OR TOP MIN. 1-1/2" CLEARANCE BETWEEN EDGE OF OPENING AND BOTTOM OF DUCT INSTALL FOR ACCESS AT EACH CHANGE IN DIRECTION AND MIN. EVERY 12 FT ON HORIZONTAL RUNS

GREASE EXHAUST DUCT SHALL SLOPE A MINIMUM 1/4 UNIT VERTICALLY FOR EVERY 12 UNITS HORIZONTAL BACK TO KITCHEN HOOD

WHEN DIGITALLY SIGNED
Printed copies of this document are not considered signed and sealed and the signature must be verified only with the electronic copies.

RODNEY L. FRITZ, P.E.
AIR FLOW CONSULTANTS, LLC
FL. LICENSE # PE 50003
9474 SW 42 CT.
DAVIE, FL 33328
PHONE: 954-541-4592
EMAIL: rfritz@airflowconsult.com

CAPTIVE AIRE HOODS ARE BUILT IN COMPLIANCE WITH
NFPA #96
NFPA #17A
NSF
UL710 STANDARDS
ETL LISTED 3054804-001

FOR QUESTIONS
PLEASE CONTACT
ADVANCED HOOD SYSTEMS
12250 WILES ROAD
CORAL SPRINGS, FL 33076
PHONE: (954) 551-9370 or (954) 937-0296
REG140@CAPTIVEAIRE.COM
STATE LIC# CSC1110285

RODNEY L FRITZ LICENSE No. 0050003 STATE OF FLORIDA PROFESSIONAL ENGINEER

DATE:_____

ADVANCED HOOD SYSTEMS

JOB	FORT LAUDERDALE POLICE HEADQUARTERS		
LOCATION	1300 W. BROWARD BLVD., FT. LAUDERDALE, FL		
DATE	4/4/24	JOB #	6544961
DWG #	1696	DRAWN BY	TMH
REV.		SCALE	1/8" = 1'-0"

CAM #24-0670
Exhibit 1
Page 203 of 288

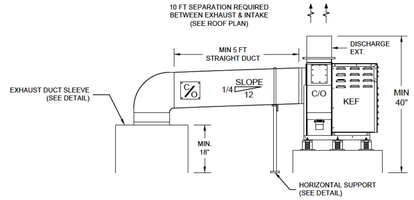

WELDED DUCT & FAN DETAIL

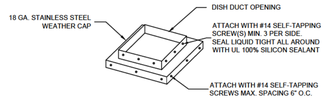

MUA SLEEVE DETAIL

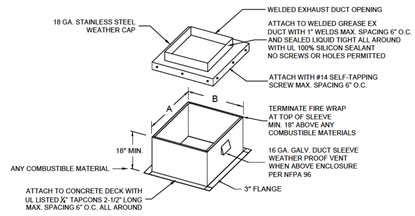

WELDED EX DUCT SLEEVE DETAIL

FBC TABLE 1522.3 ROOF MOUNTED EQUIPMENT HEIGHT REQUIREMENTS	
WIDTH OF MECHANICAL UNIT (inches)	MINIMUM CLEARANCE ABOVE SURFACE (inches)
< 24	14
25 < 36	18
37 < 48	24
49 < 60	30
61 AND WIDER	48

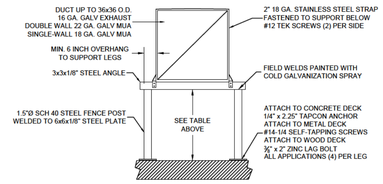

NOTE: ONE SUPPORT EVERY 4 FT OF DUCT

HORIZONTAL DUCT SUPPORT

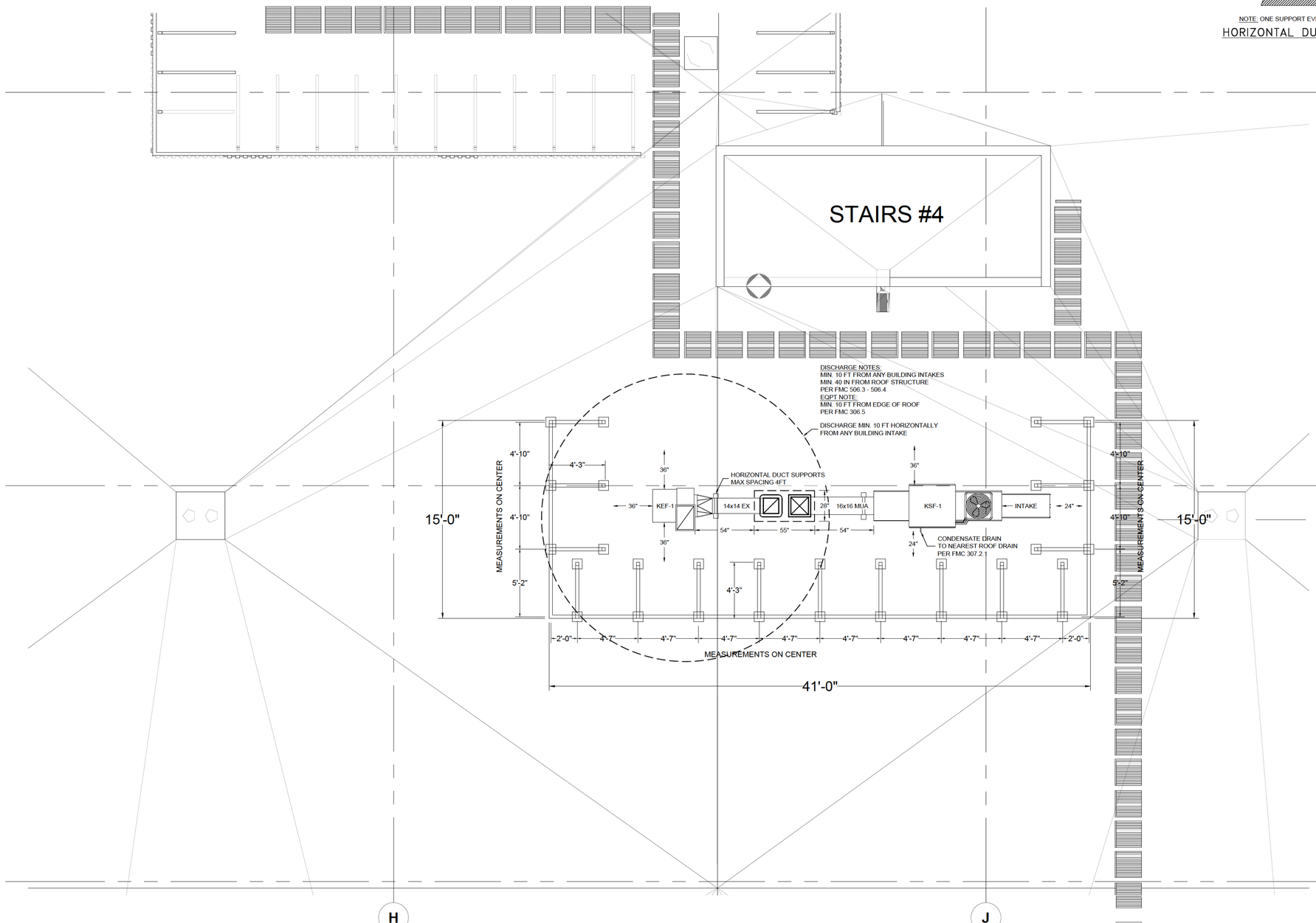

ROOF PLAN – KITCHEN VENTILATION 3RD LEVEL

SCALE: ⅛" = 1' - 0"

GRAPHIC SCALE

0 FEET 2 4 6 8

INSTALLATION SHALL COMPLY WITH: NFPA 96
FBC-M – SMACNA
ASHRAE – AMCA

HOOD PLAN
SHEET:
H-5

ROOF TOP EQUIPMENT SERVICE:

EQUIPMENT AND APPLIANCES ON ROOFS OR ELEVATED STRUCTURES SHALL COMPLY WITH FMC 306.5

WHERE EQUIPMENT REQUIRING ACCESS ARE LOCATED ON AN ELEVATED STRUCTURE OR ROOF OF A BUILDING SUCH THAT PERSONNEL WILL HAVE TO CLIMB HIGHER THAN 16 FEET ABOVE GRADE TO ACCESS SUCH EQUIPMENT AN INTERIOR OR EXTERIOR MEANS OF ACCESS SHALL BE PROVIDED PER FMC.

SUCH ACCESS SHALL NOT REQUIRE CLIMBING OVER OBSTRUCTIONS GREATER THAN 30 INCHES IN HEIGHT OR WALKING ON ROOFS HAVING A SLOPE GREATER THAN FOUR UNITS VERTICAL IN TWELVE UNITS HORIZONTAL.

ROOF TOP TERMINATIONS FOR TYPE I HOODS:

ROOF TOP EXHAUST TERMINATIONS SHALL DISCHARGE A MINIMUM OF 10 FEET HORIZONTAL FROM ANY BUILDING INTAKES, OPERABLE DOORS OR WINDOWS PER NFPA 96 - 7.8.2. WHERE 10 FEET HORIZONTAL SEPARATION IS NOT POSSIBLE THE EXHAUST FAN DISCHARGE SHALL BE A MINIMUM OF 3 FEET VERTICALLY ABOVE ANY BUILDING INTAKES.

EXHAUST SHALL DISCHARGE A MINIMUM OF 10 FEET FROM PROPERTY LINE PER FMC 501.2.1.

ROOF MOUNTED EQUIPMENT REQUIRING SERVICE SHALL BE INSTALLED A MINIMUM OF 10 FEET FROM ANY EDGE WITHOUT A MINIMUM PARAPET OF 42" HIGH FOR SAFE ACCESS DURING MAINTENANCE / SERVICE PER FMC 306.5. OR A 42" HIGH SAFETY RAILING SHALL BE PROVIDED PER FMC 304.11.

ROOF TOP GREASE EXHAUST SHALL DISCHARGE A MINIMUM OF 40" ABOVE ROOF STRUCTURE AND ABOVE ANY PARAPET WALL OR PARTS OF A BUILDING STRUCTURE, OR A MINIMUM OF 10 FEET HORIZONTAL CLEARANCE FROM SUCH STRUCTURE, OR A MINIMUM OF 5 FEET FROM SUCH STRUCTURE IF IT DISCHARGES AWAY FROM SUCH STRUCTURE PER FMC 506.3.13.1 AND DISCHARGE WILL NOT IMPINGE ON THE ROOF, OTHER EQUIPMENT OR APPLIANCES OR PARTS OF STRUCTURE PER FMC 506.5.3

EXHAUST EQUIPMENT SERVING TYPE I HOODS SHALL BE MINIMUM 2 FEET FROM PARAPET-TYPE BUILDING STRUCTURE PROVIDED THAT SUCH STRUCTURE ARE NOT HIGHER THAN THE TOP OF THE FAN DISCHARGE OPENING PER FMC 506.5.6.

MAKE-UP AIR INTAKES:

401.4 INTAKE OPENING LOCATION

AIR INTAKE OPENINGS SHALL COMPLY WITH ALL OF THE FOLLOWING:

1. INTAKE OPENINGS SHALL BE LOCATED NOT LESS THAN 10 FEET FROM LOT LINES OR BUILDINGS ON THE SAME LOT.

MECHANICAL AIR INTAKE OPENINGS SHALL BE LOCATED NOT LESS THAN 10 FEET HORIZONTALLY FROM ANY HAZARDOUS OR NOXIOUS CONTAMINANT SOURCE, SUCH AS VENTS, STREETS, ALLEYS, PARKING LOTS AND LOADING DOCKS, EXCEPT AS SPECIFIED IN ITEM 3 OR SECTION 501.3.1. SUCH INTAKES ARE LOCATED NOT LESS THAN 25 FEET VERTICALLY ABOVE SUCH LOCATIONS.

2. INTAKE OPENINGS SHALL BE LOCATED NOT LESS THAN 3 FEET BELOW CONTAMINANT SOURCES WHERE SUCH SOURCES ARE LOCATED WITHIN 10 FEET OF THE OPENING.

INTAKE OPENINGS ON STRUCTURES IN FLOOD HAZARD AREAS SHALL BE AT OR ABOVE THE ELEVATION REQUIRED BY SECTION 1612 OF THE FBC.

401.5 INTAKE OPENING PROTECTION

AIR INTAKE OPENINGS THAT TERMINATE OUTDOORS SHALL BE PROTECTED WITH CORROSION-RESISTANT SCREENS, LOUVERS OR GRILLES.

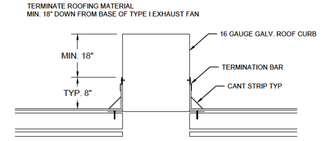

EX CURB ROOFING MATERIAL DETAIL

WHEN DIGITALLY SIGNED
Printed copies of this document are not considered signed and sealed and the signature must be verified only with the electronic copies.

RODNEY L. FRITZ, P.E.
AIR FLOW CONSULTANTS, LLC
FL. LICENSE # PE 50003
8474 SW 42 CT
DAVIE, FL 33328
PHONE: 954-541-4592
EMAIL: rfritz@airflowconsult.com

CAPTIVE AIRE HOODS ARE BUILT IN COMPLIANCE WITH

NFPA #96
NFPA #17A
NSF

UL710 STANDARDS
ETL LISTED 3054804-001

FOR QUESTIONS

PLEASE CONTACT
ADVANCED HOOD SYSTEMS
12250 WILES ROAD
CORAL SPRINGS, FL 33076
PHONE: (954) 551-9370 or (954) 937-0296
REG140@CAPTIVEAIRE.COM
STATE LIC# CSC1110285

RODNEY L FRITZ LICENSE No. 0050003 STATE OF FLORIDA PROFESSIONAL ENGINEER

DATE:_____

ADVANCED HOOD SYSTEMS

JOB	FORT LAUDERDALE POLICE HEADQUARTERS		
LOCATION	1300 W. BROWARD BLVD., FT. LAUDERDALE, FL		
DATE	4/4/24	JOB #	6544961
DWG #	1696	DRAWN BY	TMH
REV.		SCALE	1/4" = 1'-0"

1. THERMAL CERAMICS FIREMASTER FASTWRAP XL OR PYROSCAT XL IS TESTED TO ASTM E2336 AND UL LISTED PER HNKT G18 TO PROVIDE ZERO CLEARANCE TO COMBUSTIBLES AND TO PROVIDE A 1- OR 2- HOUR ENCLOSURE. THROUGH PENETRATIONS FIRESTOP SYSTEMS ARE TESTED IN ACCORDANCE WITH ASTM E 814 (UL 1479). ICC-ES APPROVAL PER REPORT ESR 2213 OR ESR 2832.

2. COMPLIANT TO THE FOLLOWING CODES:
NFPA 96
INTERNATIONAL MECHANICAL CODES
UNIFORM MECHANICAL CODE
CALIFORNIA MECHANICAL CODE

3. INSULATION APPLIED IN TWO LAYERS WITH TIGHT COMPRESSION JOINT ON BOTH LAYERS AT ALL JOINTS.

4. MINIMUM 16 GAUGE CARBON STEEL (OR 18 GAGE STAINLESS STEEL) RECTANGULAR OR ROUND GREASE EXHAUST DUCT

5. INSTALL UL LISTED AND LIQUID TIGHT THERMAL CERAMICS FASTDOOR XL ACCESS DOORS AT ALL CHANGES IN DIRECTION AND AT MINIMUM EVERY 20 FT ON HORIZONTAL RUNS.

6. SUPPORT HANGER SYSTEMS DO NOT NEED TO BE WRAPPED PROVIDED THE HANGER RODS ARE MINIMUM OF 3/8 IN. DIAMETER AND SUPPORTS ARE MINIMUM 2 X 2 X 1/8 IN. STEEL ANGLE OR SMACNA EQUIVALENT SUPPORT SYSTEM.

7. THERMAL CERAMICS DUCT WRAP SHALL BE INSTALLED DIRECTLY ONTO THE DUCT AND APPLIED FROM THE HOOD CONNECTION TO THE CONNECTION TO THE FAN.

8. THERMAL CERAMICS DUCT ENCLOSURE SYSTEM SHALL BE INSTALLED IN STRICT ACCORDANCE WITH MANUFACTURERS INSTRUCTIONS AND UL LISTINGS.

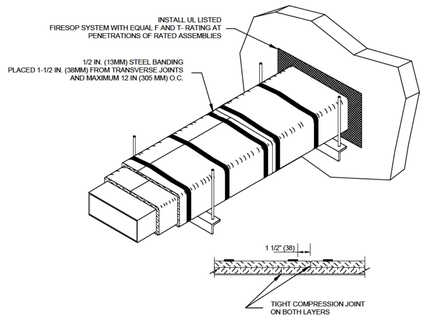

FIRE-RATED ENCLOSURE FOR
GREASE DUCTS PER ASTM E2336

Morgan ThermalCeramics

ENTIRE TYPE I EXHAUST DUCT SHALL BE INSULATED IN TWO LAYERS OF MORGAN THERMAL CERAMICS PYROSCAT DUCT WRAP OR FAST WRAP XL OR SIMILAR GREASE DUCT ENCLOSURE PER ASTM E2336 AND 2023 FMC 506.3.11.

FIRE WRAP SPECIFICATION

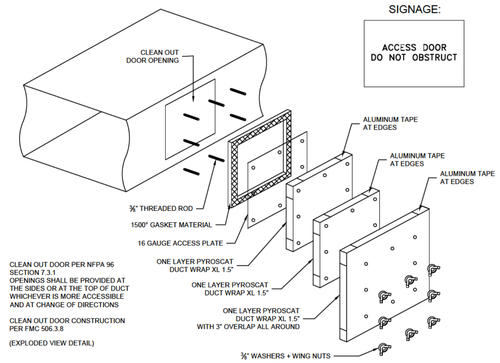

FIELD MADE CLEAN OUT DOOR DETAIL

MIN. 1-1/2" CLEARANCE BETWEEN EDGE OF CLEAN OUT DOOR AND BOTTOM EDGE OF DUCT SIDES.
INSTALLED FOR ACCESS AT EACH CHANGE IN DIRECTION AND MIN. EVERY 12 FT HORIZONTAL AND EVERY FLOOR VERTICALLY PER NFPA 96

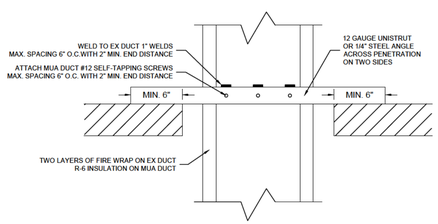

VERTICAL DUCT SUPPORT

TYPE I HOOD CLEARANCE NOTES:

THE KITCHEN HOOD SHALL MAINTAIN CLEARANCE FROM LIMITED-COMBUSTIBLES AND COMBUSTIBLE MATERIALS. INSTALLATION SHALL BE DONE IN COMPLIANCE WITH THE LATEST EDITION OF NFPA 96 AND LOCAL CODES BY THE AHJ.

NO COMBUSTIBLE BUILDING MATERIALS SUCH AS WOOD, PVC, FRP, PAPER-FACED INSULATION, OR ANY PRODUCT WITH A FLAME SPREAD INDEX GREATER THAN 25 SHALL BE WITHIN 18 INCHES OF COOKING EQUIPMENT OR TYPE I HOOD AND ITS EXHAUST DUCT.

NO LIMITED-COMBUSTIBLE MATERIALS SUCH AS GYPSUM BOARD, ROCK WOOL BATTING, ROOF INSULATION BOARD, OR ANY PRODUCT CONTAINING LESS THAN 10% MATERIAL WITH A FLAME SPREAD INDEX GREATER THAN 25 SHALL BE WITHIN 3 INCHES OF COOKING EQUIPMENT OR TYPE I HOOD AND ITS EXHAUST DUCT.

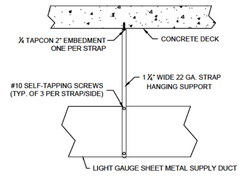

NOTE: HANGING SUPPORT EVERY 6 FT OF DUCT
ONE STRAP EACH SIDE OF DUCT

MUA DUCT HANGING

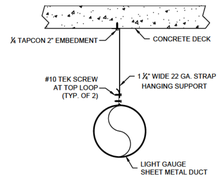

NOTE: HANGING SUPPORT EVERY 6 FT OF DUCT
SUPPORT AT EACH ADJUSTABLE ELBOW

MUA PIPE HANGING

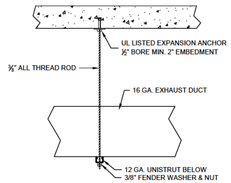

NOTE: HANGING SUPPORT EVERY 6 FT OF DUCT
EVERY 5 FT OF DUCT WITH FIRE WRAP

EXHAUST DUCT HANGING

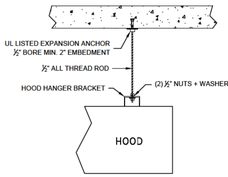

NOTE: MINIMUM OF 4 HANGERS PER HOOD
HANGER AT EACH CORNER

HOOD HANGING

SECTION VIEW – KITCHEN VENTILATION

SCALE: ⅜" = 1' - 0"

GRAPHIC SCALE
0 FEET 2 4 6 8

INSTALLATION SHALL COMPLY WITH NFPA 96 FBC–M – SMACNA ASHRAE – AMCA

HOOD PLAN
SHEET:
H–6

WHEN DIGITALLY SIGNED
Printed copies of this document are not considered signed and sealed and the signature must be verified only with the electronic copies.

RODNEY L. FRITZ, P.E.
AIR FLOW CONSULTANTS, LLC
FL. LICENSE # PE 50003
8474 SW 42 CT.
DAVIE, FL 33328
PHONE: 954-541-4592
EMAIL: rfritz@airflowconsult.com

CAPTIVE AIRE HOODS ARE BUILT IN COMPLIANCE WITH

NFPA #96
NFPA #17A
NSF

UL710 STANDARDS
ETL LISTED 3054804-001

FOR QUESTIONS

PLEASE CONTACT
ADVANCED HOOD SYSTEMS
12250 WILES ROAD
CORAL SPRINGS, FL 33076
PHONE: (954) 551-9370 or (954) 937-0296
REG140@CAPTIVEAIRE.COM
STATE LIC# CSC1110285

RODNEY L FRITZ LICENSE No. 0050003 STATE OF FLORIDA PROFESSIONAL ENGINEER

DATE:_____

ADVANCED HOOD SYSTEMS

JOB	FORT LAUDERDALE POLICE HEADQUARTERS		
LOCATION	1300 W. BROWARD BLVD., FT. LAUDERDALE, FL		
DATE	4/4/24	JOB #	6544961
DWG #	1696	DRAWN BY	TMH
REV.		SCALE	1/4" = 1'-0"

CAM #24-0670
Exhibit 1

Moss & Associates, LLC
2101 N Andrews Avenue
Ft Lauderdale, FL 33311

March 28, 2024

David Lovern
City of Fort Lauderdale
100 N Andrews Ave
Ft. Lauderdale, FL 33301

RE: Potential Change Item (PCI) CON0059 Notification
Fort Lauderdale Police Headquarters - B372302

Dear David Lovern,

This letter is to provide official notification of a potential change item (PCI) as follows:

PCI Number: CON0059
Date: March 13, 2024
Description: Permit Cost as of February 2024
Days Requested:
Reason: Contingency - External
Scope Description: Permit Cost as of February 2024 - Please note that cost incur after March 1, 2024, will be included in a separate change order.

This PCI is comprised of the following items:

Description	Amount
Sub Permit Cost including permit expediter as of 02/29/2024	$ 716,042.92
Cost paid via Owner OCO 0003/Moss OCO 0008	$ (519,937.96)
Subtotal	$ 196,104.96
Credit for expediter cost included on Owner OCO 0003/Moss OCO 0008	$ (20,376.90)
Additional Credit for expediter cost	$ (10,784.07)
Open Balance	$ 164,943.99

Transfer from City Contingency (PO #61) for Permit Cost as of February 2024.	$ -164,943.99
Transfer to General Requirements (PO #1) for Permit Cost as of February 2024.	$ 164,943.99
Grand Total	$0.00

Per the terms and conditions of our contract, we have attached the appropriate back up documentation to substantiate the above referenced costs. This request only includes the items specifically identified in this change proposal. All other costs associated with this project shall be submitted under a separate change order cover.

We respectfully reserve our rights to request additional time should it become evident that this work will impact the overall completion of the project. The costs associated with this PCI will remain valid for fourteen (14) calendar days after submission.

Please indicate your formal approval for this additional work and cost by signing in the space provided below. Moss & Associates will then incorporate this change into the next Owner Change Order (OCO).

If you should have any questions, please contact the undersigned at 954-326-2727 as soon as possible.

Sincerely, **Moss & Associates, LLC** _____ Date: _____ **D'von Nottage** Project Executive	Reviewed / Approved by: **City of Fort Lauderdale** **Approved: _____ Date:_____** **(Owner)**

Job / Category	Phase / Name	APP	T	Batch	Post Date	Source	Source Desc	Reference	Reference Desc	Quantity	WM	Billing Amount	Cost	Commited Cost
Job	**B372302.00**													
B372302.00 Fort Lauderdale Police Headquarters (GR's)														
	00.3143.00 Permitting													
M	**Material**													
		AP	C	433962	Jun 30, 2023	21327	Builders Choice Permitting Inc	1801	B372302 - Permitting		LS		2,275.00	
		AP	C	444520	Aug 23, 2023	01949	American Express	080723 JE	Jennifer Escobar		LS		2,484.07	
		AP	C	447924	Sep 11, 2023	01918	City of Fort Lauderdale	CR090823 ELEC	B372302 - Permitting		LS		89,362.52	
		AP	C	447924	Sep 11, 2023	01918	City of Fort Lauderdale	CR090823 PLUM	B372302 - Permitting		LS		63,585.00	
		AP	C	451707	Sep 27, 2023	01949	American Express	090723 JE	Jennifer Escobar		LS		14,705.39	
		AP	C	452314	Sep 30, 2023	01918	City of Fort Lauderdale	CR100223 80005	B372302 - Permitting		LS		101,235.26	
		AP	C	452314	Sep 30, 2023	01918	City of Fort Lauderdale	CR100223 70004	B372302 - Permitting		LS		155,689.24	
		AP	C	455501	Oct 18, 2023	21327	Builders Choice Permitting Inc	1926	B372302 - Permit Expediting		LS		7,630.86	
		AP	C	455501	Oct 18, 2023	21327	Builders Choice Permitting Inc	1891	B372302 - Permit Expediting		LS		3,325.63	
		AP	C	455609	Oct 16, 2023	01949	American Express	100723 JE	Jennifer Escobar		LS		68,499.58	
		AP	C	458792	Oct 26, 2023	21327	Builders Choice Permitting Inc	1927	B372302 - Permitting		LS		7,145.41	
		AP	C	510751	Nov 16, 2023	01949	American Express	110723 JE	Jennifer Escobar		LS		11,742.99	
		AP	C	523919	Nov 28, 2023	01918	City of Fort Lauderdale	CR112723 NEW HYD	B372302 - Permit New Hydrant		LS		5,711.69	
		AP	C	523919	Nov 28, 2023	01918	City of Fort Lauderdale	CR112723 HYD REL	B372302 - Permit Hydrant Relocation		LS		4,039.91	
		AP	C	595403	Dec 15, 2023	01949	American Express	120723 JE	Jennifer Escobar		LS		30,108.20	
		AP	C	657433	Jan 17, 2024	01949	American Express	010724 JE	Jennifer Escobar		LS		29,570.58	
		AP	C	698552	Feb 13, 2024	01918	City of Fort Lauderdale	CR020924	B372302 - Permitting		LS		10,000.00	
		AP	C	706256	Feb 15, 2024	21327	Builders Choice Permitting Inc	1993	B372302 - Permitting Services		LS		1,950.00	
		AP	C	706256	Feb 15, 2024	21327	Builders Choice Permitting Inc	1990	B372302 - Permitting Services		LS		2,250.00	
		AP	C	706256	Feb 15, 2024	21327	Builders Choice Permitting Inc	1991	B372302 - Permitting Services		LS		2,350.00	
		AP	C	706256	Feb 15, 2024	21327	Builders Choice Permitting Inc	1992	B372302 - Permitting Services		LS		1,750.00	
		AP	C	713774	Feb 19, 2024	16974	Truist Bank	020224 MK	Matthew Kane		LS		699.00	
		AP	C	713782	Feb 20, 2024	01949	American Express	120723 JE	Jennifer Escobar		LS		-240.00	

01 - Moss & Associates, LLC
JOB COSTING - TRANSACTION REPORT

Job / Category	Phase / Name	APP	T	Batch	Post Date	Source	Source Desc	Reference	Reference Desc	Quantity	WM	Billing Amount	Cost	Commited Cost
Job	**B372302.00**													
		AP	C	720261	Feb 19, 2024	01949	American Express	020724 JE	Jennifer Escobar		LS		17,098.50	
		AP	C	743582	Mar 13, 2024	01949	American Express	030824 JE	Permiting		LS		83,074.09	
		JB	B	444319	Aug 23, 2023	01918	City of Fort Lauderdale	013269	JB Draw 3 - B372302 OB # 03 07/31/23	0	LS	2,275.00		
		JB	B	456467	Oct 23, 2023	01918	City of Fort Lauderdale	013527	JB Draw 5 - B372302 OB # 05 09/30/23	0	LS	155,431.59		
		JB	B	491815	Oct 31, 2023	01918	City of Fort Lauderdale	013590	JB Draw 6 - B372302 OB # 06 10/31/23	0	LS	351,085.96		
		JB	B	648108	Dec 31, 2023	01918	City of Fort Lauderdale	013664	JB Draw 7 - B372302 OB # 07 11/30/23	0	LS	7,145.41		
		JB	B	648108	Jan 15, 2024	01918	City of Fort Lauderdale	013664	JB Draw 7 - B372302 OB # 07 11/30/23	0	LS	-7,145.41		
		JB	B	648108	Jan 15, 2024	01918	City of Fort Lauderdale	013664	JB Draw 7 - B372302 OB # 07 11/30/23	0	LS	7,145.41		
		JB	B	666682	Dec 31, 2023	01918	City of Fort Lauderdale	013995	JB Draw 8 - B372302 OB # 08 12/31/23	0	LS	51,362.79		
		JB	B	666682	Jan 26, 2024	01918	City of Fort Lauderdale	013995	JB Draw 8 - B372302 OB # 08 12/31/23	0	LS	-51,362.79		
		JB	B	666682	Jan 26, 2024	01918	City of Fort Lauderdale	013995	JB Draw 8 - B372302 OB # 08 12/31/23	0	LS	51,362.79		
		JB	B	734916	Feb 29, 2024	01918	City of Fort Lauderdale	014058	JB Draw 9 - B372302 OB # 9 01/31/24	0	LS	29,570.58		
		JB	B	743545	Mar 13, 2024	01918	City of Fort Lauderdale	014235	JB Draw 10 - B372302 OB # 10 02/29/24	0	LS	36,097.50		
						Material TOTAL:				0		632,968.83	716,042.92	0.00
	S				**Subcontract / Committments**									
		SC	O	450840	Sep 17, 2023	08496	Florida Civil, Inc.	B372302.00030	B372302.00030-000 Dewatering Permitting	0	LS			17,525.00
						Subcontract / Committments TOTAL:				0		0.00	0.00	17,525.00
						Permitting TOTAL:				0		632,968.83	716,042.92	17,525.00
						Fort Lauderdale Police Headquarters (GR's) TOTAL:				0		632,968.83	716,042.92	17,525.00

Department	Account	Account Name	Cost Amount	Billing Amount	Profit
370	4000.00	Contr Income - Summary	0.00	632,968.83	632,968.83
370	5300.00	Material	716,042.92	0.00	-716,042.92
			716,042.92	**632,968.83**	**-83,074.09**

Description	Amount
Sub Permit Cost including permit expediter as of 02/29/2024	$ 716,042.92
Cost paid via Owner OCO 0003/Moss OCO 0008	$ (519,937.96)
Subtotal	$ 196,104.96
Credit for expediter cost included on Owner OCO 0003/Moss OCO 0008	$ (20,376.90)
Additional Credit for expediter cost	$ (10,784.07)
Open Balance	$ 164,943.99

Buiders Choice Permitting Inc	
Description	Cost
6/30/2023	$ 2,275.00
8/23/2023	$ 2,484.07
10/18/2023	$ 7,630.86
10/18/2023	$ 3,325.63
10/26/2023	$ 7,145.41
2/15/2024	$ 1,950.00
2/15/2024	$ 2,250.00
2/15/2024	$ 2,350.00
2/15/2024	$ 1,750.00
Total Cost as of 02/15/2024	$ 31,160.97
Credit to Owner due to Owner OCO 0003/Moss OCO 008	$ (20,376.90)
Additional Credit for expediter cost	$ 10,784.07

Report Parameters

Company:	01	From Category:		Job Status:	A	Run Date:	Mar 14, 2024
Job Pick List:		To Category:		Transaction Type:	A	Run Time:	8:46 AM EDT
From Job:	B372302.00	From Phase:	00.3143.00	Include Subjobs:	Y	Operator:	DLEON
To Job:	B372302.00	To Phase:	00.3143.00	Separate Page per Job:	N	Report Code:	JC2000
Category Pick List:		Batch Number:		From Date:			
Phase Type:		Print Inv Date:	N	To Date:	Mar 14, 2024		
		Show Quantity:	Y				

DocuSign Envelope ID: 3D6DAF94-19AC-47D9-A96C-026DBE06AA6F

Moss & Associates, LLC
2101 N Andrews Avenue
Ft Lauderdale, FL 33311

November 09, 2023

David Lovern
City of Fort Lauderdale
100 N Andrews Ave
Ft. Lauderdale, FL 33301

RE: Potential Change Item (PCI) CON0012 Notification
Fort Lauderdale Police Headquarters - B372302

Dear David Lovern,

This letter is to provide official notification of a potential change item (PCI) as follows:

PCI Number: CON0012
Date: October 18, 2023
Description: Permit Cost as of October 23, 2023
Days Requested:
Reason: Contingency - External
Scope Description: Permit Cost as of October 2023 - Please note that cost incur after October 23, 2023, will be included in a separate change order.

This PCI is comprised of the following items:

Transfer from City Contingency (PO #61) to General Requirements (PO #1) for Permit Cost as of October 23, 2023	$ 519,937.96
Transfer from City Contingency (PO #61) to General Requirements (PO #41) Sprinklermatic Permit Cost	$ 13,306.16
City Contingency	$ -533,244.12
Grand Total	$0.00

Per the terms and conditions of our contract, we have attached the appropriate back up documentation to substantiate the above referenced costs. This request only includes the items specifically identified in this change proposal. All other costs associated with this project shall be submitted under a separate change order cover.

We respectfully reserve our rights to request additional time should it become evident that this work will impact the overall completion of the project. The costs associated with this PCI will remain valid for fourteen (14) calendar days after submission.

Please indicate your formal approval for this additional work and cost by signing in the space provided below. Moss & Associates will then incorporate this change into the next Owner Change Order (OCO).

If you should have any questions, please contact the undersigned at 954-326-2727 as soon as possible.

Sincerely, **Moss & Associates, LLC** DocuSigned by: FFEA6ACC4C954B9... Date: 11/9/2023 D'von Nottage Project Executive	Reviewed / Approved by: **City of Fort Lauderdale** DocuSigned by: David Lovern AF86549AC4E0473... **Approved:** **(Owner)** **Date:** 11/9/2023

DS
JE

From: Jennifer Escobar
Sent: Tuesday, January 16, 2024 12:43 PM
To: James Hemphill
Cc: Anthony Fajardo; David Lovern; Robert Buscemi; Kristin Thompson; D'von Nottage; Desiree Leon
Subject: RE: FLHP: Moss OCO 008 / Owner OCO 003 - Owner Contingency - Clarification

James,

Correct, Moss will not submit cost for any firm related to permitting expediting services via City Contingency.

Jen

From: James Hemphill <JHemphill@fortlauderdale.gov>
Sent: Tuesday, January 16, 2024 11:37 AM
To: Jennifer Escobar <JEscobar@mosscm.com>
Cc: Anthony Fajardo <AFajardo@fortlauderdale.gov>; David Lovern <DLovern@fortlauderdale.gov>; Robert Buscemi <RBuscemi@fortlauderdale.gov>; Kristin Thompson <KrThompson@fortlauderdale.gov>; D'von Nottage <DNottage@mosscm.com>; Desiree Leon <dleon@mosscm.com>
Subject: RE: FLHP: Moss OCO 008 / Owner OCO 003 - Owner Contingency - Clarification

CAUTION: This email originated from outside of Moss

Do not click links or open attachments unless you can confirm the sender and know the content is safe.

Be careful of any attachments or links that ask for your password.

Thank you for this, however the highlighted section below is limited. Please confirm that Moss will not submit any associated cost from any firm related to permit expediting services. Reimbursement requests shall be for the actual permit only, not any associated cost related to obtaining the permit.
Thanks

ARE YOU COMPETING FOR CITY BUSINESS? CLICK HERE TO REGISTER IN OUR NEW PROCUREMENT SOFTWARE SYSTEM.

From: Jennifer Escobar <JEscobar@mosscm.com>
Sent: Tuesday, January 16, 2024 11:27 AM

To: James Hemphill <JHemphill@fortlauderdale.gov>
Cc: Anthony Fajardo <AFajardo@fortlauderdale.gov>; David Lovern <DLovern@fortlauderdale.gov>; Robert Buscemi <RBuscemi@fortlauderdale.gov>; Kristin Thompson <KrThompson@fortlauderdale.gov>; D'von Nottage <DNottage@mosscm.com>; Desiree Leon <dleon@mosscm.com>
Subject: [EXTERNAL:CAUTION!]- FLHP: Moss OCO 008 / Owner OCO 003 - Owner Contingency - Clarification

Mimecast Attachment Protection has deemed this file to be safe, but always exercise caution when opening files.

[::CAUTION!::] This email originated from *outside* The City of Fort Lauderdale.
Do Not Reply, click links, or open attachments from an unknown or suspicious origin. Confirm the email address is from an expected source before taking action.
Report any suspicious emails to spamadmin@fortlauderdale.gov

Good morning, James,

Following our discussion last week, I am writing to confirm that Moss will issue a credit for $20,376.90 (see attached) to the City in our upcoming permit reimbursement PCI request for Builders Choice Permitting Inc. Additionally, please note that Moss will refrain from submitting any costs associated with Builders Choice Permitting for reimbursement through the City's Contingency.

Should you have any questions or concerns please let us know.

Regards,

Jen V. Escobar, **LEED®AP BD+C**
Moss
c (954) 305-2775 | f (954) 524-5677 | Email: jescobar@mosscm.com
mosscm.com

Moss & Associates, LLC
2101 N Andrews Avenue
Ft Lauderdale, FL 33311

June 21, 2024

David Lovern
City of Fort Lauderdale
100 N Andrews Ave
Ft. Lauderdale, FL 33301

RE: Potential Change Item (PCI) 0108 Notification
Fort Lauderdale Police Headquarters - B372302

Dear David Lovern,

This letter is to provide official notification of a potential change item (PCI) as follows:

PCI Number: 0108
Date: February 16, 2024
Description: HQ Level 1 Evidence Room Walkin Environmental Chamber & Freezer - Hyvac - Additional Scope.
Days Requested: TBD.
Reason: Owner Directive - External
Scope Description: Moss's GMP Assumptions & Clarifications Items G15, G32 & Miscellaneous Equipment Division 11 excludes Walkin Environmental Chambers & Freezers. Following the OAC Meeting of 02/06/24, per City's email request dated 02/16/24, Moss is to now provide pricing for the additional scope of work to provide the HQ Level 1 Evidence Room Walkin Environmental Chamber & Freezer. Final Submittal Package Submission Per Meeting Minutes of 06/21/24. Meeting Minutes enclosed. Final pricing pending submittal approval and inclusion of any additional costs associated with any applicable cost impact submittal review comments.

This PCI is comprised of the following items:

HVAC	$ 131,010.00
01 Construction Contingency 2%	$ 2,620.00
02 Subcontract Default Insurance 1.25%	$ 1,670.00
03 Moss Insurance 1.75%	$ 2,368.00
04 Bond 1%	$ 1,377.00
05 Fee 4%	$ 5,562.00
Grand Total	$144,607.00

Per the terms and conditions of our contract, we have attached the appropriate back up documentation to substantiate the above referenced costs. This request only includes the items specifically identified in this change proposal. All other costs associated with this project shall be submitted under a separate change order cover.

We respectfully reserve our rights to request additional time should it become evident that this work will impact the overall completion of the project. The costs associated with this PCI will remain valid for fourteen (14) calendar days after submission.

Please indicate your formal approval for this additional work and cost by signing in the space provided below. Moss & Associates will then incorporate this change into the next Owner Change Order (OCO).

If you should have any questions, please contact the undersigned at 954-326-2727 as soon as possible.

Sincerely, **Moss & Associates, LLC** _____ Date: June 21, 2024 Michael Perez-Gurri Project Manager 1	Reviewed / Approved by: **City of Fort Lauderdale** **Approved:** _____ Date: _____ **(Owner)**

Michael Perez-Gurri

From: Michael Perez-Gurri
Sent: Monday, June 17, 2024 10:59 AM
To: David Lovern; Robert Buscemi; Lieutenant Adam Solomon (ASolomon@fortlauderdale.gov); Kristeen Lentvorski
Cc: D'von Nottage; Matthew Kane; Christopher Andrisani
Subject: RE: Final pricing on Items

@David Lovern

1. They are **not**, and the final cost inclusive of Moss's overhead and profit adds cannot be finalized at this time. Final pricing pending submittal approval and inclusion of any additional costs associated with any applicable cost impact submittal review comments.

Regards,
Michael Perez-Gurri (MPG)
Assistant Project Manager / Certified General Contractor (CGC)
Fort Lauderdale Police Headquarters Project
Moss
Direct: 561.267.6324 | Office: 954.524.5678
mosscm.com

From: David Lovern <DLovern@fortlauderdale.gov>
Sent: Monday, June 17, 2024 9:54 AM
To: Michael Perez-Gurri <MPerezGurri@mosscm.com>; Robert Buscemi <RBuscemi@fortlauderdale.gov>; Lieutenant Adam Solomon (ASolomon@fortlauderdale.gov) <asolomon@fortlauderdale.gov>; Kristeen Lentvorski <kristeen@abetterplumbing.net>
Cc: D'von Nottage <DNottage@mosscm.com>; Matthew Kane <MKane@mosscm.com>; Christopher Andrisani <CAndrisani@mosscm.com>
Subject: RE: Final pricing on Items

CAUTION: This email originated from outside of Moss
Do not click links or open attachments unless you can confirm the sender and know the content is safe.
Be careful of any attachments or links that ask for your password.

Mike,

Are these costs inclusive of Moss's overhead and profit adds?

Please incorporate if not already done so. Thanks.

Respectfully,

David Lovern
Senior Project Manager
City of Fort Lauderdale
954.828.6235 Office
305.491.1436 Direct
dlovern@fortlauderdale.gov
#WeAreFTL

From: Michael Perez-Gurri <MPerezGurri@mosscm.com>
Sent: Friday, June 14, 2024 10:19 AM
To: David Lovern <DLovern@fortlauderdale.gov>; Robert Buscemi <RBuscemi@fortlauderdale.gov>; Lieutenant Adam Solomon (ASolomon@fortlauderdale.gov) <asolomon@fortlauderdale.gov>; Kristeen Lentvorski <kristeen@abetterplumbing.net>
Cc: D'von Nottage <DNottage@mosscm.com>; Matthew Kane <MKane@mosscm.com>; Christopher Andrisani <CAndrisani@mosscm.com>
Subject: [EXTERNAL:CAUTION!]- FW: Final pricing on Items

[::CAUTION!::] This email originated from *outside* The City of Fort Lauderdale.
Do Not Reply, click links, or open attachments from an unknown or suspicious origin. Confirm the email address is from an expected source before taking action.
Report any suspicious emails to spamadmin@fortlauderdale.gov

@David Lovern @rbuscemi@fortlauderdale.gov @Lieutenant Adam Solomon (ASolomon@fortlauderdale.gov) @Kristeen Lentvorski

See my comments in green below.

Regards,
Michael Perez-Gurri (MPG)
Assistant Project Manager / Certified General Contractor (CGC)
Fort Lauderdale Police Headquarters Project
Moss
Direct: 561.267.6324 | Office: 954.524.5678
mosscm.com

From: David Lovern <DLovern@fortlauderdale.gov>
Sent: Wednesday, June 5, 2024 8:57 AM
To: Christopher Andrisani <CAndrisani@mosscm.com>
Cc: D'von Nottage <DNottage@mosscm.com>
Subject: FW: Final pricing on Items

CAUTION: This email originated from outside of Moss
Do not click links or open attachments unless you can confirm the sender and know the content is safe.
Be careful of any attachments or links that ask for your password.

Chris,

Please provide final pricing for the below items when you are able. Thanks.

Respectfully,

David Lovern
Senior Project Manager
954.828.6235 Office
305.491.1436 Direct
City of Fort Lauderdale, Florida

From: Robert Buscemi <RBuscemi@fortlauderdale.gov>
Sent: Monday, June 3, 2024 8:31 PM
To: David Lovern <DLovern@fortlauderdale.gov>
Cc: Adam Solomon (FLPD) <ASolomon@flpd.gov>
Subject: Final pricing

David
Can we get from Moss the final pricing for the following items

1. **Fume hoods (2) at lab:** RFI-468 with the updated SOO per the City's confirmation to AECOAM was provided on 05/24/24. Revised pricing from H2I pending & forthcoming.
2. **Refrig/freezer combo unit at evidence storage:** Preliminary Trade Contractor Costs = **$131,010**. Submittal Package REV0 returned "*Revise & Resubmit*" Final pricing pending submittal approval and any additional costs associated with applicable cost impact submittal review comments.
3. **Freezer unit at garage**: Preliminary Trade Contractor Costs = **$59,521**. Submittal Package REV0 pending submission incorporating applicable review comments from HQ Fidge/Freezer Submittal Package to mitigate it from being returned "*Revise & Resubmit*". Final pricing pending submittal approval and any additional costs associated with applicable cost impact submittal review comments.
4. **Drying chambers.** RFI-419 regarding Drying Chamber Coordination was only requesting Drying Chamber Dimensions for coordination purposes. Drying Chamber are **By Owner,** and it has never been requested to date by the City for Moss to provide pricing for the Drying Chamber as a Change Order Request.

5. **Under counter refig units at break room areas:** (including total number needed): RFI-254 is about the one (1) under-counter refrigerator in the Laboratory requesting cut sheets for coordination purpose only at this one (1) under counter refrigerator which is **By Owner**. Regarding under-counter refrigerators at Break Room Areas, these under-counter refrigerators as well are **By Owner**, and it has never been requested to date by the City for Moss to provide pricing for the under-counter refrigerators as a Change Order Request.

Robert Buscemi R.A. LEED AP
Project Manager
City of Fort Lauderdale
rbuscemi@fortlauderdale.gov
770-286-5293

AECOM

SHOP DRAWING REVIEW COMMENTS

Fort Lauderdale Police Headquarters & Parking Garage

AECOM PROJECT NUMBER: **60639620**

DATE SUBMITTED: May 28, 2024

SUBMITTAL PACKAGE NUMBER: 114000-1.0 Revision 0

SUBMITTAL PACKAGE NAME: HQ-WALK-IN ENVIRONMENTAL CHAMBER AND FREEZER

PACKAGE ITEM DETAILS:

1. HQ-WALK-IN ENVIRONMENTAL CHAMBER AND FREEZER (REVIEWED EXCEPTIONS NOTED, RESUBMISSION REQUIRED)

AECOM

- [ ] A REVIEWED NO EXCEPTIONS TAKEN
- [ ] B REVIEWED EXCEPTIONS NOTED, RESUBMISSION NOT REQUIRED
- [x] C REVIEWED EXCEPTIONS NOTED, RESUBMISSION REQUIRED
- [ ] D REJECTED, RESUBMISSION REQUIRED
- [ ] E FOR INFORMATION ONLY, NO REVIEW REQUIRED

This review was performed only for general conformance with the design concept of the project and general compliance with the information given in the Contract Documents. Modifications or comments made on the shop drawings during this review do not relieve the Contractor from compliance with the requirements of the Contract Documents. Approval of a specific item does not include approval of the assembly of which the item is a component. Contractor is responsible for dimensions to be confirmed and correlated at the jobsite, information that pertains solely to the fabrication processes or to the means, methods, techniques, sequences, and procedures of construction, coordination of the work of all trades and for performing all work in a safe and satisfactory manner.

114000-1.0 Revision 0	60639620
SUBMITTAL NUMBER	PROJECT NUMBER
J. Karnik/ E. Spencer/ E. Siegel	May 28, 2024
REVIEWED BY	DATE

The contractor shall review and comply with notes and comments on submittals in addition to notes provided on attached submittal transmittal/review form.

COMMENTS:

Mechanical and Electrical Review:

1. Electrical – No comments.

2. Comment in page label 5:
   - Door should be with Vision port, Pressure relief port, Threshold: Stainless steel, factory installed &Anti condensate heater at freezer doors.
   - Provide Vapor proof Lighting fixtures.

   View Window / Vision Port To Be Included For Both HQ Chamber, HQ Freezer & PG Freezer.
   Moss / MPG / 06/21/24 Meeting Minutes With AECOM, Moss, Hyvac & Frigid Coolers.

   Refer 2.2.A.6.D & E in SECTION 114000 - WALK-IN ENVIRONMENTAL CHAMBER AND FREEZER

3. Comment in page label 8:
   - Provide Desiccant Dehumidifier serving each chamber.
   - Refer 2.2.B.4.a in SECTION 114000 - WALK-IN ENVIRONMENTAL CHAMBER AND FREEZER – Submit Desiccant Dehumidifier for approval under section 238416.16 along with revised Walk-In Cooler submittal. Dehumidifier shall be sized by refrigeration system provider to maintain chamber humidity below 25% as per paragraph 2.2.B.4.
   - Label as CDU-4-1 and UC-1-B-1.

   Below 25% Envelope Humidity Required Per Specs.Note: Difficult To Achieve In South Florida Conditions. To Be Submitted Concurrently or As a Separate Submittal. Calculations Based On As Much End-user Information as Possible From PD. Frigid Coolers + Manufacture to submit all necessary questions to Hyvac for Design Team + Owner Review/Responses.

   Moss / MPG / 06/21/24 Meeting Minutes With AECOM, Moss, Hyvac & Frigid Coolers.

4. Comment in page label 9:
   - Per Specification 114000 para 2.2.B.a and f - Include winter control, crankcase heater, and enclosed weatherproof housing. Provide all manufacturer required components such as dryers, expansion valve etc. in the refrigerant circuit. Show all components in the piping shop drawings.
   - Explain why there is a difference in the options for the two units in the submittal?

   All required options to be included, as required. Frigid Cooler Quote for both HQ & PG submittal package to be included.
   Moss / MPG / 06/21/24 Meeting Minutes With AECOM, Moss, Hyvac & Frigid Coolers.

5. Comment in page label 13:
   - ~~Not in compliance with Chamber operating temperature. See Specification 2.2.B.3.~~
   - ~~Note that the Freezer is in PG and not in HQ.~~
   - Label as CDU-4-2 and UC-1-B-2.

Not Applicable.
Moss / MPG / 06/21/24
Meeting Minutes With
AECOM, Moss, Hyvac & Frigid Coolers.

Not Applicable.
Not Applicable.
Moss / MPG / 06/21/24
Meeting Minutes With
AECOM, Moss, Hyvac & Frigid Coolers.

Correct labeling on Condenser Product Data.
Moss / MPG / 06/21/24 Meeting Minutes With AECOM, Moss, Hyvac & Frigid Coolers.

6. Comment in page label 14:
   - Per Specification 114000 para 2.2.B.a and f - Include winter control, crankcase heater, and enclosed weatherproof housing. Provide all manufacturer required components such as dryers, expansion valve etc. in the refrigerant circuit. Show all components in the piping shop drawings.
   - Explain why there is a difference in the options for the two units in the submittal?

All required options to be included, as required. Frigid Cooler Quote for both HQ & PG submittal package to be included.
Moss / MPG / 06/21/24 Meeting Minutes With AECOM, Moss, Hyvac & Frigid Coolers.

7. Comment in page label 18:
   - Equipment tags not provided - CDU-4-1 and CDU-4-2
   - Pipe supports Not provided.
   - Show riser traps in the refrigerant pipes as per manufacturer's written instruction for the refrigerant piping run of 150 – 200 feet and an elevation of about 50 feet. See para 2.2.B.e.
   - Only one common refrigerant pipe is shown here. At a minimum there should be one suction and one liquid line for each compressor circuit. Please coordinate with manufacturer. Also show sizes of all refrigerant piping.

Shop Drawing Comments. Hyvac to provide fridge coolers shop drawings and overall linear footage to confirm refrigerant piping run for HQ. HQ condenser located on roof of 3-Story HQ and Walk-in Chamber & Freezer in HQ Located on Level 1 of 3. Linear footage not a concern at PG Walk-in Freezer Condenser is approximately 30'(LF) away from freezer location.

Moss / MPG / 06/21/24 Meeting Minutes With AECOM, Moss, Hyvac & Frigid Coolers.

8. Comment in page label 19:
   - Pipe supports Not provided.
   - Show riser traps in the refrigerant pipes as per manufacturer's written instruction for the refrigerant piping run of 150 – 200 feet and an elevation of about 50 feet. See para 2.2.B.e.
   - Only one common refrigerant pipe is shown here. At a minimum there should be one suction and one liquid line for each compressor circuit. Please coordinate with manufacturer. Also show sizes of all refrigerant piping.

Shop Drawing Comment: Only 1 pipe shown. Revise to include note that 2 pipes will be provide with required insulation.

Moss / MPG / 06/21/24 Meeting Minutes With AECOM, Moss, Hyvac & Frigid Coolers.

9. Comment in page label 20:
   - Pipe supports Not provided.
   - Show riser traps in the refrigerant pipes as per manufacturer's written instruction for the refrigerant piping run of 150 – 200 feet and an elevation of about 50 feet. See para 2.2.B.e.
   - Only one common refrigerant pipe is shown here. At a minimum there should be one suction and one liquid line for each compressor circuit. Please coordinate with manufacturer. Also show sizes of all refrigerant piping.

Hyvac Shop Drawing Comment:Revise Shop Drawings Accordingly.
Moss / MPG / 06/21/24 Meeting Minutes With AECOM, Moss, Hyvac & Frigid Coolers.

10. Comment in page label 21:
    - Pipe supports Not provided.
    - Show riser traps in the refrigerant pipes as per manufacturer's written instruction for the refrigerant piping run of 150 – 200 feet and an elevation of about 50 feet. See para 2.2.B.e.
    - Only one common refrigerant pipe is shown here. At a minimum there should be one suction and one liquid line for each compressor circuit. Please coordinate with manufacturer. Also show sizes of all refrigerant piping.

Hyvac Shop Drawing Comment:Revise Shop Drawings Accordingly.
Moss / MPG / 06/21/24 Meeting Minutes With AECOM, Moss, Hyvac & Frigid Coolers.

11. Comment in page label 22:
    - Pipe supports Not provided.
    - Show riser traps in the refrigerant pipes as per manufacturer's written instruction for the refrigerant piping run of 150 – 200 feet and an elevation of about 50 feet. See para 2.2.B.e.

Hyvac Shop Drawing Comment:Revise Shop Drawings Accordingly.
Moss / MPG / 06/21/24 Meeting Minutes With AECOM, Moss, Hyvac & Frigid Coolers.

- Only one common refrigerant pipe is shown here. At a minimum there should be one suction and one liquid line for each compressor circuit. Please coordinate with manufacturer. Also show sizes of all refrigerant piping.
- Equipment's tag not shown UC-1-B-1 and UC-1-B-2

Hyvac Shop Drawing Comment:Revise Shop Drawings Accordingly.
Moss / MPG / 06/21/24 Meeting Minutes With AECOM, Moss, Hyvac & Frigid Coolers.

12. Comment in page label 27: Pipe fitting need to be below as per specification.

3.2 PIPING APPLICATIONS FOR REFRIGERANT R-410A
A. Suction Lines NPS 1-1/2 and Smaller for Conventional Air-Conditioning Applications: Copper, Type ACR, annealed-temper tubing and wrought-copper fittings with brazed joints.
B. Hot-Gas and Liquid Lines:
Copper, Type ACR, annealed- or drawn-temper tubing and wrought-copper fittings with brazed or soldered joints.

Hyvac Submittal Comment:Call Out exact fitting size to be used on refrigerant run line product date & shop drawing as a note.
Moss / MPG / 06/21/24 Meeting Minutes With AECOM, Moss, Hyvac & Frigid Coolers.

Refer 3.2 in SECTION 232300 - REFRIGERANT PIPING

Architecture Review:

1. Page 3-5 of 154: Shop drawing depicts a raised floor and ream, however current field condition has a 6" recess in the slab, ramp not required. Please coordinate with contractor.
2. Pag 22 of 154: Note the dimensions of walk-in refrigerator/freezer width as submitted has changed from an overall width of 20' to 16' so the location of the piping connections points shown below are not accurate, contractor to coordinate location of connection to refrigerant piping.

1) HQ Depression Required. 6" Depression In Contract Drawings
To Be Reduced To 4-3/4" To Match Assembly Thickness Of
Combo Walk-in Chamber & Freezer.PG Depression Not Required.PG Freezer
May Be Installed on Slab-On-Grade.

2)Hyvac Shop Drawing Review Comment: Combo Walk-in Chamber & Freezer
Placeholder Dimensions on HQ Level 1 To Be Revised Per Revised
Outside-To-Outside Dimensions Per Frigid Cooler Cut Sheets / City of
Fort Lauderdale Sketch. Refer to RFI-246 City Response dated 04/10/24 at 9:58AM.

Moss / MPG / 06/21/24 Meeting Minutes With AECOM, Moss, Hyvac & Frigid Coolers.

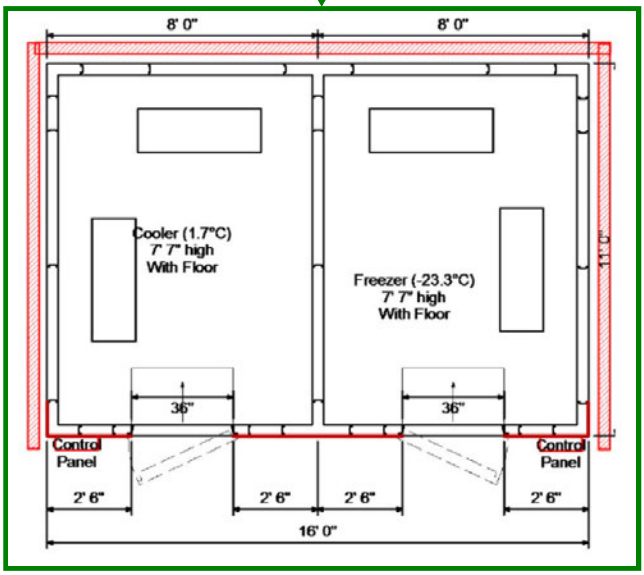

Hyvac
Exceeding Expectations
312 SOUTH MILITARY TRAIL
DEERFIELD BEACH, FL 33442
PHONE: (954) 427-3811
FAX: (954) 426-3762
E-MAIL: hyvac@hyvacinc.com

CHANGE PROPOSAL REQUEST

TO: Jen V. Escobar, LEED®AP BD+C
Moss
c (954) 305-2775 | f (954) 524-5677 | Email: jescobar@mosscm.com
mosscm.com

DATE 3/1/2024
Rev2 4/22/2024
PROJECT: FT. Lauderdale Police HQ

PROJ. # 1023003

CPR NO. 10R2

THE FOLLOWING IS A COST PROPOSAL AS A RESULT OF CHANGES AND MODIFICATIONS TO THE CONTRACT DOCUMENTS WHICH IMPACTS COSTS ON THE HVAC SYSTEM.

WE PROPOSE TO FURNISH ALL MATERIALS, LABOR, SERVICES AND SUPERVISION FOR THE EXECUTION OF THE MECHANICAL WORK COVERED BY THE CHANGES TO:

Costs associated with the added walking cooler units on the Hyvac scope. This proposal excluded: Any type of roofing, cutting, patching, painting electrical and plumbing work)

PROPOSAL LUMP SUM AMOUNT $ 131,010

COST BREAKDOWN IS AS FOLLOWS:

COST CODES	QTY.	DESCRIPTION	MAT. UNIT COSTS	LABOR UNITS	TOTAL MATERIAL COSTS	TOTAL LABOR COSTS	SUB CONTRACTORS COSTS
9 6092	1	Hyvac material take off date 2/26/2024 (See attached)	$ 25,028	408	$ 25,028	408	
2 5326	2	Walking cooler installation	$ 356	24	$ 712	48	
2 5326	2	Condenser Unit Installation	$ 485	8	$ 970	16	
2 5326	1	Frigid Cooler quote 24-0286MW (See attached)	$ 38,640	0	$ 38,640	-	
2 5326	2	NOA approved stand	$ 789	8	$ 1,578	16	
					$ 66,928	488	$ -

	EQUIPMENT & MATERIALS COSTS		$ 66,928
	SALES TAXES		$ 4,685
	EQUIPMENT & MATERIALS SUB-TOTAL		$ 71,613
	LABOR COSTS		$ 23,156
	LABOR BURDEN		$ 9,610
	PROJECT SUPERVISION		$ 3,131
	PROJECT MANAGEMENT		$ 1,613
	DESIGN & ENGINEERING		$ 897
	LABOR SUB-TOTAL		$ 38,407
	TOTAL SUBCONTRACTORS		$ -
	EXPENDABLE TOOLS		$ 715
	CLEAN UP		$ 1,650

	SAFETY			$ 768
	FREIGHT			$ -
	QUALITY ASSURANCE			$ 1,320
	REPRODUCTIONS			$ 330
	MATERIAL HANDLING			$ 2,148
	WARRANTY			$ 2,148
	SUB-TOTAL AMOUNT			$ 119,100
	OVERHEAD COSTS %			$ 5,955
	PROFIT COSTS %			$ 5,955
	BOND COSTS % 0			$ -
	TOTAL PROPOSAL AMOUNT			$ 131,010

THIS PROPOSAL IS FIRM FOR ACCEPTANCE WITHIN 30 DAYS. WE CANNOT PROCEED WITH THE WORK COVERED BY THE PROPOSED CHANGE UNTIL WE ARE SO DIRECTED IN WRITING APPROVING COSTS, OR UNTIL WE RECEIVE YOUR WRITTEN CHANGE AUTHORIZATION, WHICH MUST BE WITHIN THE ABOVE TIME LIMIT TO PREVENT ADDITIONAL COSTS.

THIS PROPOSAL IS BASED SOLELY ON THE USUAL COSTS ELEMENTS SUCH AS LABOR AND MATERIALS, AND DOES NOT INCLUDE ANY AMOUNTS FOR ADDITIONAL CHANGES IN THE SEQUENCE OF WORK DELAYS, DISRUPTION, RESCHEDULING, EXTENDED OVERHEAD, OVERTIME, ACCELERATION AND/OR IMPACT COSTS, AND THE RIGHT IS EXPRESSLY RESERVED TO CLAIM FOR ANY AND ALL OF THESE AND RELATED ITEMS OF COST PRIOR TO ANY FINAL SETTLEMENT OF THIS CONTRACT.

ACCEPTED BY: _____ **HYVAC, INC.** **JR** _____

DATE: _____

FRIGID COOLERS LLC

Walk-in Coolers, Freezers, Refrigeration,
Glass Doors and Restaurant Equipment
15751 Sheridan St. - Suite 115
Ft. Lauderdale, FL 33331

Quotation

Phone: 954-237-6753
Fax : 954-237-6302
sales@frigidcoolers.com

Quoted to:

Robert Buscemi
rbuscemi@fortlauderdale.gov
Ft Lauderdale, FL Zip: 33312
770-286-5293
--

Ship to:

Free Shipping Applied - Please Note: Shipping Does Not Include Lift Gate Or Residential Area Delivery. Additional Charges Will Apply Unless Stated Otherwise In Quote.

Your One Source For All Your Cold Storage Solutions!

		Revision
Quote Number:	**24-0427MW**	**-0**
Quote Date:	04/19/2024	
Sales Rep:	Gus	
Job Name:	Combo 16'0" X 11'0" X 7'7" High With Floor In Cooler And Freezer	

Item	Qty	Product Description
1	1	Indoor Walk-In Combination With Floor In The Cooler, With Floor In The Freezer, Nominal 16'0" X 11'0" X 7'6-1/2" High with 4" Insulation (ASTM Test C-518 Flame spread and smoke development 15/250 ASTM Test E84), Stucco Embossed Acrylume 26 Gauge Exterior and Interior Metal Finish, Panel with Cam-Lock System. 2009 EISA Compliant, NSF (National Sanitary Foundation) Listed and Approved. Divided as follows: Cooler With Floor Size: 8'0" X 11'0" X 7'6-1/2" High Freezer With Floor Size: 8'0" X 11'0" X 7'6-1/2" High
2	1	Cooler Reinforce Floor: 8'0" x 11'0" With 4" Insulation (ASTM Test C-518 Flame spread and smoke development 15/250 ASTM Test E84) with Heavy Gauge Aluminum Interior and Stucco Embossed Exterior Prefabricated Floor, NSF (National Sanitary Foundation) Listed and Approved.
3	1	**Cooler Inside Ramp 36" Wide X 30" Deep**
4	1	Cooler **Door and Frame: 36" x 76" Flush Door Opening with Perimeter Magnetic Door Gasket, Medium Temperature with 4" Insulation (ASTM Test C-518 Flame spread and smoke development 15/250 ASTM Test E84), Stucco Embossed Acrylume Metal Finish.* *Included Door and Frame Accessories: (1) LED Vapor Proof Light (1) Digital Pilot Light Switch (1) Digital Thermometer (2) Self Closing Door Hinges (1) Entry Door Latch Handle with Key Lock (1) Inside Safety Release (1) Automatic Door Self Closer **(2) 12" Diamond Kick Plate (Inside - Outside Only) **(1) 13x13 View Window

FRIGID COOLERS LLC
Walk-in Coolers, Freezers, Refrigeration,
Glass Doors and Restaurant Equipment
15751 Sheridan St. - Suite 115
Ft. Lauderdale, FL 33331

Quotation

Phone: 954-237-6753
Fax : 954-237-6302
sales@frigidcoolers.com

Quoted to:

Robert Buscemi
rbuscemi@fortlauderdale.gov
Ft Lauderdale, FL Zip: 33312
770-286-5293
--

Ship to:

Free Shipping Applied - Please Note: Shipping Does Not Include Lift Gate Or Residential Area Delivery. Additional Charges Will Apply Unless Stated Otherwise In Quote.

Your One Source For All Your Cold Storage Solutions!

		Revision
Quote Number:	24-0427MW	-0
Quote Date:	04/19/2024	
Sales Rep:	Gus	
Job Name:	Combo 16'0" X 11'0" X 7'7" High With Floor In Cooler And Freezer	

Item	Qty	Product Description
5	1	Cooler **Witt - Russell Model: WFO100M4SEA Remote Preassembled Outdoor Refrigeration System, Medium Temperature 1 HP SCROLL Copeland Compressor, Anti-Corrosion-Fins To Increase Coil Life Span, Seamless Inner Groove Copper Tubing For Increased Heat Exchange, Head Pressure Control To Stabilize The Freezing Of Liquid Line And Prevent Compressor Damage, Matched Fan Blades For Maximum Air Movement And Cooling, Adjustable Low Pressure Control Included, Industry Standard Parts For Easy Replacement, Easily Accessible Special Wiring Harness Connections That Won't Come Loose With Vibration, Control Box And Service Valves Located Outside For Easy Installation And Service, Preassembled Outdoor Cover To Protect Against Corrosion, Approved By U.L., Cul And ISO9001. 208-230/60/3 Voltage, MCA 15.0 MOPD 15 LIQUID 3/8" SUCTION 5/8" BTUs: 9,740 (When Holding At +35° F) 2009 EISA Compliant (R404A Refrigerant) (1) Factory Mounted Sight Glass With Moisture Indicator (1) Factory Mounted Drier (1) Factory Mounted Encapsulated High And Low Pressure Controls **(1) Thermostat (Factory Mounted) **(1) Solenoid Valve And Coil (Factory Mounted) (1) Factory Mounted Crankcase Heater (1) Factory Mounted Timer With Contactor
6	1	Cooler **Witt - Russell Model: WL6A094DDAA Air Defrost Low Profile Evaporator, Anti-Corrosion-Fins To Increase Coil Life Span, Corrugated Fins Increase Air Flow And Improve Heat Exchange, Parts Easily Accessible By Opening Front Cover, Protruding Fan And Motor Placement To Reduce Vibration Noise, Includes, Number Of **EC MOTORS Fans** (2) Per Evaporator (R-404a Refrigerant) 208-230/60/1 Voltage AMPS: 1 **(1) Thermostatic Expansion Valve (Factory Mounted) Per Evaporator
7	1	**Cooler 1 Year Compressor Warranty Included. No Labor**
8	1	Freezer Reinforce Floor: 8'0" x 11'0" With 4" Insulation (ASTM Test C-518 Flame spread and smoke development 15/250 ASTM Test E84) with Heavy Gauge Aluminum Interior and Stucco Embossed Exterior Prefabricated Floor, NSF (National Sanitary Foundation) Listed and Approved.
9	1	**Freezer Inside Ramp 36" Wide X 30" Deep**

FRIGID COOLERS LLC
Walk-in Coolers, Freezers, Refrigeration,
Glass Doors and Restaurant Equipment
15751 Sheridan St. - Suite 115
Ft. Lauderdale, FL 33331

Quotation

Phone: 954-237-6753
Fax : 954-237-6302
sales@frigidcoolers.com

Quoted to:

Robert Buscemi
rbuscemi@fortlauderdale.gov
Ft Lauderdale, FL Zip: 33312
770-286-5293
--

Ship to:

Free Shipping Applied - Please Note: Shipping Does Not Include Lift Gate Or Residential Area Delivery. Additional Charges Will Apply Unless Stated Otherwise In Quote.

Your One Source For All Your Cold Storage Solutions!

		Revision
Quote Number:	24-0427MW	-0
Quote Date:	04/19/2024	
Sales Rep:	Gus	
Job Name:	Combo 16'0" X 11'0" X 7'7" High With Floor In Cooler And Freezer	

Item	Qty	Product Description
10	1	Freezer **Door and Frame: 36" x 76" Flush Door Opening with Magnetic Door Gasket, Low Temperature with 4" Insulation (ASTM Test C-518 Flame spread and smoke development 15/250 ASTM Test E84), Perimeter Heater Wire, Stucco Embossed Acrylume Metal Finish.* *Included Door and Frame Accessories: (1) LED Vapor Proof Light (1) Digital Pilot Light Switch (1) Digital Thermometer (2) Self Closing Door Hinges (1) Entry Door Latch Handle with Key Lock (1) Inside Safety Release (1) Automatic Door Self Closer (1) 12" Diamond Kick Plate (Outside Only) (1) Perimeter Frame Heater Wire **(2) 12" Diamond Kick Plate (Inside - Outside Only) **(1) 13x13 View Window
11	1	Freezer Pressure Relief Vent Installed in Freezer (115 Volts)
12	1	Freezer Witt - Russell Model: WFO350L4SEA Remote Preassembled Outdoor Refrigeration System, Low Temperature 3 1/2 HP SCROLL Copeland Compressor, Anti-Corrosion-Fins To Increase Coil Life Span, Seamless Inner Groove Copper Tubing For Increased Heat Exchange, Head Pressure Control To Stabilize The Freezing Of Liquid Line And Prevent Compressor Damage, Matched Fan Blades For Maximum Air Movement And Cooling, Adjustable Low Pressure Control Included, Industry Standard Parts For Easy Replacement, Easily Accessible Special Wiring Harness Connections That Won't Come Loose With Vibration, Control Box And Service Valves Located Outside For Easy Installation And Service, Preassembled Outdoor Cover To Protect Against Corrosion, Approved By U.L., Cul And ISO9001. 208-230/60/3 Voltage, MCA 25.6 MOPD 35 LIQUID 3/8" SUCTION 7/8" BTUs: 12,106 (When Holding At -10° F) 2009 EISA Compliant (R-404a Refrigerant) (1) Factory Mounted Sight Glass With Moisture Indicator (1) Factory Mounted Drier (1) Factory Mounted Encapsulated High And Low Pressure Controls **(1) Thermostat (Factory Mounted) **(1) Solenoid Valve And Coil (Factory Mounted) (1) Factory Mounted Crankcase Heater (1) Factory Mounted Electric Defrost Timer With Contactor

FRIGID COOLERS LLC
Walk-in Coolers, Freezers, Refrigeration,
Glass Doors and Restaurant Equipment
15751 Sheridan St. - Suite 115
Ft. Lauderdale, FL 33331

Quotation

Phone: 954-237-6753
Fax : 954-237-6302
sales@frigidcoolers.com

Quoted to:

Robert Buscemi
rbuscemi@fortlauderdale.gov
Ft Lauderdale, FL Zip: 33312
770-286-5293
--

Ship to:

Free Shipping Applied - Please Note: Shipping Does Not Include Lift Gate Or Residential Area Delivery. Additional Charges Will Apply Unless Stated Otherwise In Quote.

Your One Source For All Your Cold Storage Solutions!

		Revision
Quote Number:	**24-0427MW**	**-0**
Quote Date:	04/19/2024	
Sales Rep:	Gus	
Job Name:	Combo 16'0" X 11'0" X 7'7" High With Floor In Cooler And Freezer	

Item	Qty	Product Description
13	1	Freezer Witt - Russell Model: WL6E105DDAA Electric Defrost Low Profile Evaporator, Anti-Corrosion-Fins To Increase Coil Life Span, Corrugated Fins Increase Air Flow And Improve Heat Exchange, Parts Easily Accessible By Opening Front Cover, Protruding Fan And Motor Placement To Reduce Vibration Noise, Number Of **EC MOTORS Fans** (2) Per Evaporator (R-404a Refrigerant) 208-230/60/1 Voltage AMPS: 1 HEATER AMPS: 9.8 **(1) Thermostatic Expansion Valve (Factory Mounted) Per Evaporator
14	1	**Freezer 1 Year Compressor Warranty Included. No Labor**
15	1	**10 Year Panel Warranty Included.**
16	1	Free Shipping Applied. PLEASE NOTE: Shipping **DOES NOT** include **LIFT GATE** or residential area delivery. Additional charges will apply unless stated otherwise in the quote.
17	1	**No Tax Applied, Resale Tax Certificate Will Have To Be Provided.**

Once Shipped You Must Ensured That There Are No Damages Or Shortages. If There Are Any Damages Or Shortages, Note It On The Shipping Receipt And Contact Us Immediately. Failure To Note Damages Or Shortages On Shipping Receipt Will Result In Denial Of Claim By Trucking Company.

Notes:
All Brand New Equipment Quoted. We DO NOT Quote or Sell Used or Refurbished Equipment.
Free Shipping Applied - PLEASE NOTE: Shipping does NOT include lift gate or residential area delivery. Additional charges will apply unless stated otherwise in quote.

Sub Total	**$38,640.00**
Shipping	**$0.00**
Tax	**$0.00**
Grand Total	**$38,640.00**

General Terms and Conditions of Sale:
Quotations: All quotations are valid for 30 days unless otherwise noted. All efforts are made to ensure accuracy of quotations, but descriptions are not guaranteed. We reserved the right to modify typographical errors. Orders: All orders resulting from a written Frigid Coolers LLC quotation are subject to acceptance by Frigid Coolers LLC. No production work will start until the sales agreement(s) and the approval drawing(s) have been filled in, accordingly signed, dated and returned to Frigid Coolers LLC. For complete terms and conditions go to: www.FrigidCoolers.com/terms

Project: Bal Harbour S

Added WC unit

Category	Size	Item Desc	Qty	UOM	Mat Unit	Mat A	Mat Ext	Fld Ac	Fld Unit	Fld Ext
154# TYPE L COOPER	3/8"	TYPE L COOPER	440	'	3.425	1	1507	1	0.04	17.6
154# TYPE L COOPER	5/8"	TYPE L COOPER	440	'	7.95	1	3498	1	0.064	28.16
ARMAFLEX INSULATION	3/8"	TYPE ARX R6	440	'	1.625	1	715	1	0.064	28.16
ARMAFLEX INSULATION	5/8"	TYPE ARX R6	440	'	2.125	1	935	1	0.064	28.16
150# TYPE L COOPER	3/8"	90 ELBOW	26	ea	5.05	1	131.3	1	0.16	4.16
150# TYPE L COOPER	5/8"	90 ELBOW	26	ea	4.225	1	109.85	1	0.44	11.44
154# TYPE L COOPER	3/8"	COUPLING	32	'	7.95	1	254.4	1	0.064	2.048
150# TYPE L COOPER	5/8"	COUPLING	32	ea	5.675	1	181.6	1	0.44	14.08
150# TYPE L COOPER	3/8"	T585 SERVICE BALL VALVE	1	ea	23.25	1	23.25	1	0.24	0.24
150# TYPE L COOPER	5/8"	T585 SERVICE BALL VALVE	1	ea	38.2	1	38.2	1	0.36	0.36
10CU/FT ACETYLENE	8CU/FT	ACETYLENE EXCHANGE	2	ea	52.475	1	104.95	1	0.8	1.6
20CU/FT OXYGEN TANK	20CU/FT	OXYGEN TANK EXCHANGE	2	ea	61.125	1	122.25	1	0.8	1.6
20CU/FT NITROGEN TANK	20CU/FT	NITROGEN TANK EXCHANGE	2	ea	65.625	1	131.25	1	0.8	1.6
AEROCELL GLUE 1PT BLACK	N/A	AEROCELL GLUE 1PT BLACK W/BRUSH	4	ea	40.8	1	163.2	1	0.8	3.2
15% STAY-SILV .05X1/8"	N/A	15% STAY-SILV .05X1/8" 15620F1 FLAT	2	ea	370.575	1	741.15	1	0.8	1.6
TAPE 2" BLACK DUCT	N/A	TAPE 2" BLACK DUCT	6	ea	53.3	1	319.8	1	0.8	4.8
HANGERS & CLAMPS ETC	2''	#260 ADJ.CLEVIS HNG. GLV.	73	ea	2.85	1	209	1	0.4	29.333333
HANGERS & CLAMPS ETC	3''	#260 ADJ.CLEVIS HNG. GLV.	73	ea	5.475	1	401.5	1	0.48	35.2
HANGERS & CLAMPS ETC	4''	#260 ADJ.CLEVIS HNG. GLV.	73	ea	6.675	1	489.5	1	0.56	41.066667
HANGERS & CLAMPS ETC	3/8''	#146 ALL THREAD ROD	440	'	0.75	1	330	1	0.04	17.6
HANGERS & CLAMPS ETC	3/8''	#136 ROD COUPLING	440	ea	9.15	1	4026	1	0.04	17.6
HANGER-R.CLAMP-ETC.	3/8''	FIG.165H-HEX NUTS	440	ea	0.075	1	33	1	0.04	17.6
HANGER-R.CLAMP-ETC.	3/8''	FIG.103-WASHER--FLAT--ROUND	440	ea	0.075	1	33	1	0.04	17.6
HANGER-R.CLAMP-ETC.	1/4''	FIG 514- DROP IN CONCRETE ANCHOR	440	ea	0.425	1	187	1	0.08	35.2
HANGER-R.CLAMP-ETC.	1A	INSULATION SHIELD	220	spec	44.575	1	9806.5	1	0.064	14.08
NUTS BOLTS & GASKETS	3/8''	FIG.1309 WEDGE ANCHOR	220	ea	1.125	1	247.5	1	0.136	29.92
CONDENSER UNIT STAND	N/A		2	ea	289	1	289	1	4	4
		TOTAL					***$ 25,028.20***			***408***

ALUMINUM STANDS FOR MECHANICAL UNITS

RICHARD NEET, P.E.
PE# 86488 CA# 9885

AUGUST 25, 2023

STATE

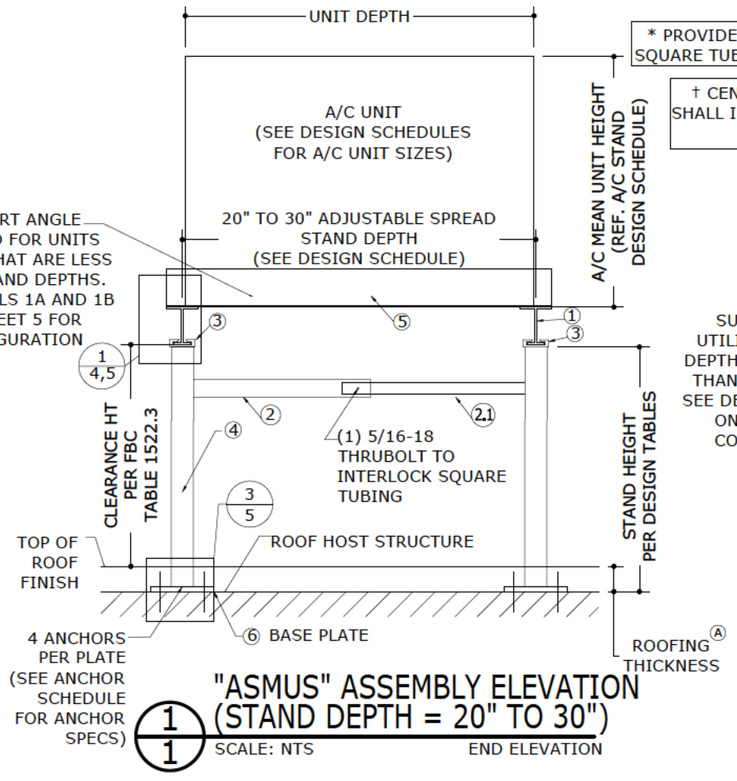

"ASMUS" ASSEMBLY ELEVATION
(STAND DEPTH = 20" TO 30")
1/1 SCALE: NTS END ELEVATION

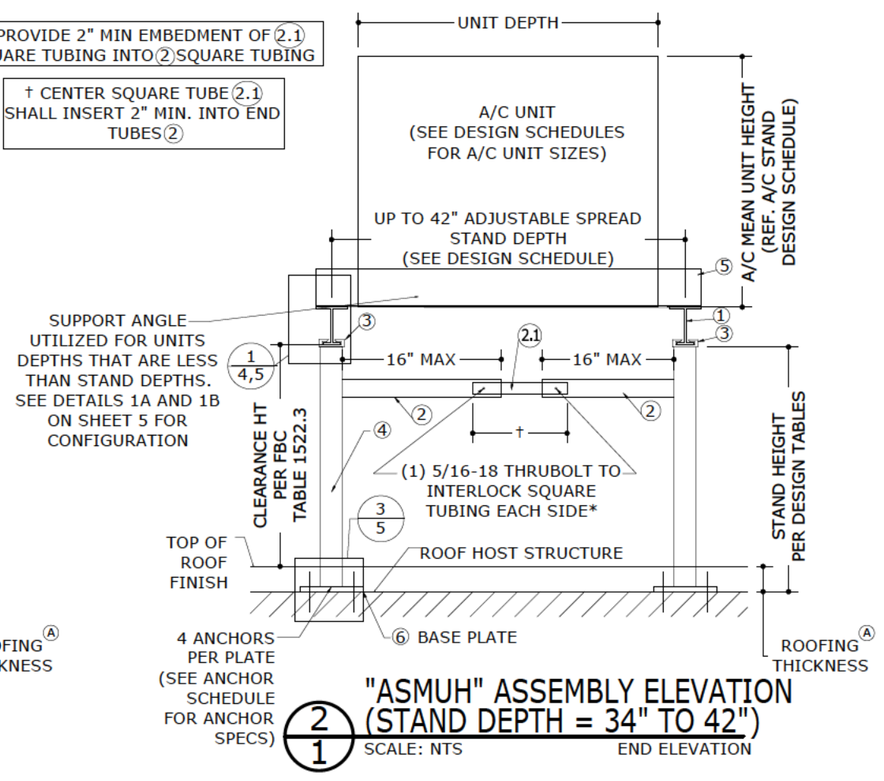

"ASMUH" ASSEMBLY ELEVATION
(STAND DEPTH = 34" TO 42")
2/1 SCALE: NTS END ELEVATION

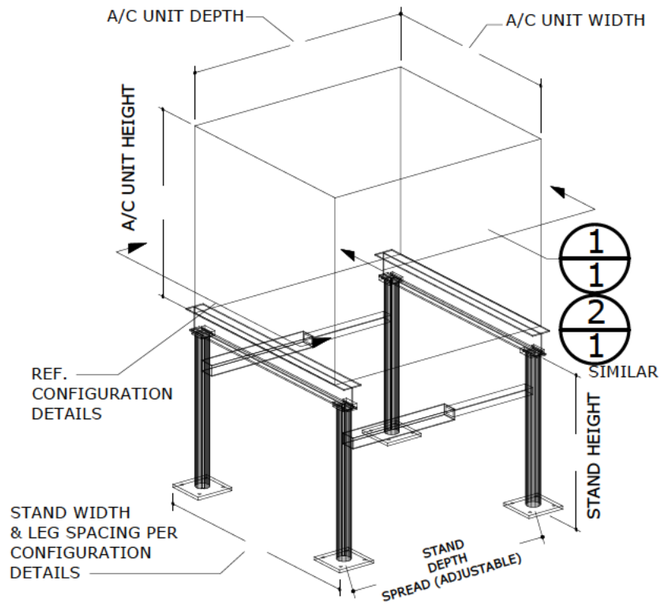

ᴬROOFING FINISH THICKNESS SHALL BE ACCOUNTED FOR BY CONTRACTOR WHEN DETERMINING REQUIRED STAND HEIGHT IN ACCORDANCE WITH THE FBC OR THE LOCAL JURISDICTION.

REQUIRED STAND DEPTH SHALL BE DETERMINED BY CONTRACTOR

75# MIN./450 # MAX UNIT WEIGHT AS VERIFIED BY OTHERS, TYP.

NOTE REGARDING USE OF THIS DOCUMENT & USE OUTSIDE FLORIDA:

NON-SITE-SPECIFIC STRUCTURAL PERFORMANCE EVALUATION. THIS PRODUCT EVALUATION IS VALID FOR USE IN **FLORIDA ONLY**. USE OF THIS EVALUATION REQUIRES A REVIEW & CERTIFICATION BY A LOCAL DESIGN PROFESSIONAL WHO SHALL BE RESPONSIBLE FOR THE PROPER ADAPTATION OF THIS GENERAL PERFORMANCE EVALUATION TO ANY SITE-SPECIFIC PROJECT. CONTACT THIS OFFICE AT **ENGINEERINGEXPRESS.COM/QUOTE** FOR ASSISTANCE WITH YOUR PROJECT-SPECIFIC NEEDS & FOR ADAPTATION & CERTIFICATION OF THIS DOCUMENT OUTSIDE OF FLORIDA.

VISIT ECALC.IO/63451

FOR SITE-SPECIFIC DEVIATIONS
& MORE INFORMATION ABOUT THIS DOCUMENT
OR SCAN THIS QR CODE

VISIT ENGINEERINGEXPRESS.COM/STORE
FOR ADDITIONAL PLANS, REPORTS & RESOURCES

MAXIMUM ALLOWABLE DESIGN PRESSURES:

AS NOTED IN DESIGN SCHEDULES

DESIGN NOTES:

DESIGN PRESSURES CALCULATED FOR USE WITH THIS SYSTEM SHALL BE DETERMINED SEPARATELY ON A JOB-SPECIFIC BASIS IN ACCORDANCE WITH THE GOVERNING CODE USING ASD METHODOLOGY. SITE-SPECIFIC PRESSURE REQUIREMENTS AS DETERMINED IN ACCORDANCE WITH ASCE 7-22 AND THE STRUCTURAL PROVISIONS OF THE FLORIDA BUILDING CODE EIGTH EDITION (2023) SHALL BE LESS THAN OR EQUAL TO THE LATERAL AND UPLIFT DESIGN PRESSURE CAPACITY VALUES LISTED HEREIN FOR ANY ASSEMBLY AS SHOWN.

GENERAL NOTES

1. THIS SYSTEM HAS BEEN DESIGNED AND SHALL BE FABRICATED IN ACCORDANCE WITH THE STRUCTURAL PROVISIONS OF THE FLORIDA BUILDING CODE EIGHTH EDITION (2023) AND THE 2020 ALUMINUM DESIGN MANUAL.
2. MAXIMUM DIMENSIONS AND WEIGHT OF A/C UNIT SHALL CONFORM TO SPECIFICATIONS STATED HEREIN, MINIMUM 75LB OR MAXIMUM AS LISTED HEREIN.
3. THE ARCHITECT/ENGINEER OF RECORD FOR THE PROJECT SUPERSTRUCTURE WITH WHICH THIS DESIGN IS USED SHALL BE RESPONSIBLE FOR THE INTEGRITY OF ALL SUPPORTING SURFACES TO THIS DESIGN WHICH SHALL BE COORDINATED BY THE PERMITTING CONTRACTOR.
4. REACTION FORCES LISTED FOR USE WITH HOST STRUCTURE VERIFICATION ARE CALCULATED USING ASD METHODOLOGY. DESIGN PROFESSIONAL OF RECORD TO VERIFY APPLICABILITY AND/OR ADDITIONAL FACTORS FOR USE WITH HOST STRUCTURE VERIFICATION.
5. ALL FASTENERS TO BE #10 OR GREATER SAE GRADE 5, UNLESS NOTED OTHERWISE, CADMIUM PLATED OR OTHERWISE CORROSION RESISTANT MATERIAL AND SHALL COMPLY WITH CHAPTER J, SPECIFICATIONS FOR ALUM. STRUCTURES -SECTION 1, THE ALUMINUM ASSOCIATION,INC., & APPLICABLE FEDERAL,STATE, AND LOCAL CODES. PROVIDE (3) PITCHES MIN PAST THREAD PLANE.
6. ALL EXTRUDED MEMBERS SHALL BE ALUMINUM ALLOY TYPE 6061-T6 OR 6005-T5.
7. ALL 22GA DEFORMED STEEL STRAPS USED FOR UNIT TIE-DOWNS SHALL BE Fy = 36KSI MIN. STEEL. FABRICATION OF STEEL STRAPS SHALL BE BY STRAP MANUFACTURER ONLY.
8. ALL EXISTING CONCRETE SUBSTRATE SHALL HAVE MINIMUM f'c COMPRESSIVE STRENGTH OF 3000 PSI AS VERIFIED BY OTHERS, U.N.O.
9. ALUMINUM WELDING SHALL BE PERFORMED IN ACCORDANCE WITH FBC SECTION 2003.8.1 WITH WELD FILLER ALLOYS MEETING ANSI/AWS A5.10 STANDARDS TO ACHIEVE ULTIMATE DESIGN STRENGTH IN ACCORDANCE WITH THE ALUMINUM DESIGN MANUAL, TABLE J.2.1. SUGGESTED WELD FILLER: 5356 ELECTRODES. ALL ALUMINUM CONSTRUCTION SHALL BE IN CONFORMANCE WITH THE TOLERANCES, QUALITY AND METHODS OF CONSTRUCTION AS SET FORTH IN FBC SECTION 2003.2 AND THE AMERICAN WELDING SOCIETY'S STRUCTURAL WELDING CODE-ALUMINUM (D1.2). MINIMUM WELD IS ⅛" THROAT FULL PERIMETER FILLET WELD UNLESS OTHERWISE NOTED.
10. THE CONTRACTOR IS RESPONSIBLE TO INSULATE MEMBERS FROM DISSIMILAR MATERIALS TO PREVENT ELECTROLYSIS.
11. ELECTRICAL GROUND, WHEN REQUIRED, TO BE DESIGNED & INSTALLED BY OTHERS. ALL MECHANICAL SPECIFICATIONS (CLEAR SPACE, TONNAGE, ETC.) SHALL BE AS PER MANUFACTURER RECOMMENDATIONS AND ARE THE EXPRESS RESPONSIBILITY OF THE CONTRACTOR.
12. ENGINEER SEAL AFFIXED HERETO VALIDATES STRUCTURAL DESIGN AS SHOWN ONLY. USE OF THIS SPECIFICATION BY CONTRACTOR, et. al. INDEMNIFIES & SAVES HARMLESS THIS ENGINEER FOR ALL COST & DAMAGES INCLUDING LEGAL FEES & APPELLATE FEES RESULTING FROM MATERIAL FABRICATION, SYSTEM ERECTION, CONSTRUCTION PRACTICES BEYOND THAT WHICH IS CALLED FOR BY LOCAL, STATE, & FEDERAL CODES & FROM DEVIATIONS OF THIS PLAN.
13. THE SYSTEM DETAILED HEREIN IS GENERIC AND DOES NOT PROVIDE INFORMATION FOR A SPECIFIC SITE. FOR SITE CONDITIONS DIFFERENT FROM THE CONDITIONS DETAILED HEREIN, A LICENSED ENGINEER OR REGISTERED ARCHITECT SHALL PREPARE SITE SPECIFIC DOCUMENTS FOR USE IN CONJUNCTION WITH THIS DOCUMENT.
14. EXCEPT AS EXPRESSLY PROVIDED HEREIN, NO ADDITIONAL CERTIFICATIONS OR AFFIRMATIONS ARE INTENDED.
15. AC STANDS SHALL LABELED PER MIAMI-DADE REQUIREMENTS FOR NON-MANDATORY PRODUCT APPROVALS IN ACCORDANCE WITH THE FLORIDA BUILDING CODE.

FL42314.1

ENGINEERING EXPRESS®
POSTAL ADDRESS:
401 W. ATLANTIC AVE R10 BOX 219
DELRAY BEACH, FL 33444
ENGINEERINGEXPRESS.COM

Miami Tech, Inc.
3611 NW 74th St
Miami, FL 33147
(305) 693-7054

Aluminum Stand for Mechanical Units
Florida Statewide Approval
Florida Building Code

REMARKS	DRWN	CHKD	DATE
INT ISSUE	RN	RN	8/20/2023

COPYRIGHT ENGINEERING EXPRESS®

23-63451

SCALE: NTS UNLESS NOTED

1 OF 5

8/25/2023 12:26 PM RICKN c:\users\rickn\engineering express\production - documents\projects\23-\23-63451 aluminum stand for mechanical units.dwg

RICHARD NEET, P.E.
PE# 86488 CA# 9885

AUGUST 25, 2023

RICHARD NEET LICENSE No. P.E. 86488 STATE OF FLORIDA PROFESSIONAL ENGINEER

FL42314.1

ENGINEERING EXPRESS®
POSTAL ADDRESS:
401 W. ATLANTIC AVE R10 BOX 219
DELRAY BEACH, FL 33444
ENGINEERINGEXPRESS.COM

STAND COMPONENTS

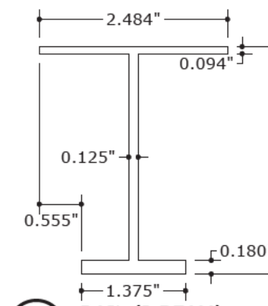

1 RAIL (I-BEAM) NTS

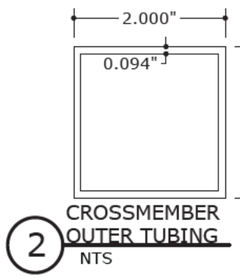

2 CROSSMEMBER OUTER TUBING NTS

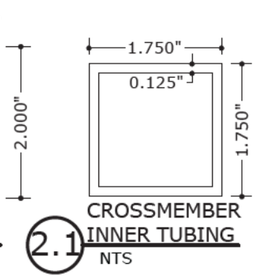

2.1 CROSSMEMBER INNER TUBING NTS

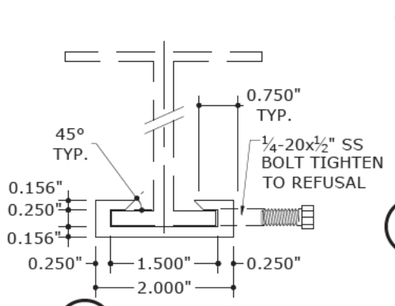

3 C-CHANNEL NTS

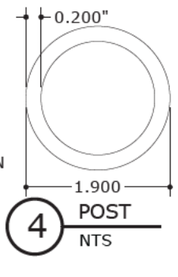

4 POST NTS

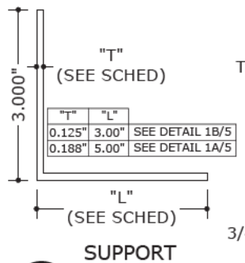

"T"	"L"	
0.125"	3.00"	SEE DETAIL 1B/5
0.188"	5.00"	SEE DETAIL 1A/5

5 SUPPORT ANGLE NTS

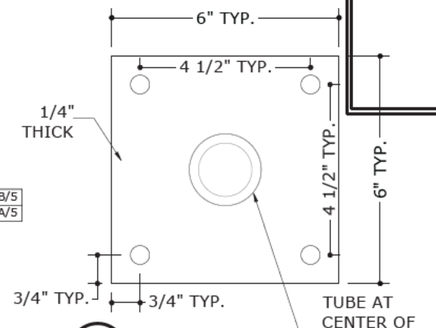

6 BASEPLATE NTS

MEAN UNIT HEIGHT & MAX FACE AREA CALCULATION DIRECTIVE:

THIS DIRECTIVE SHALL BE USED TO CALCULATE THE MEAN UNIT HEIGHT & MAXIMUM FACE AREA OF ANY MULTIPLE UNIT CONFIGURATION.

EXAMPLE CONFIGURATIONS:

2 UNITS:2 FRAME CONFIGURATION

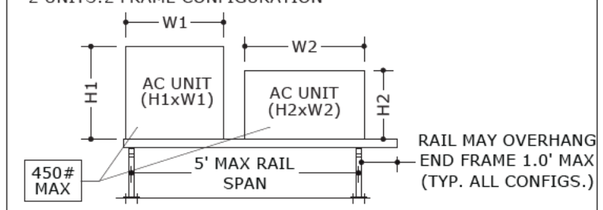

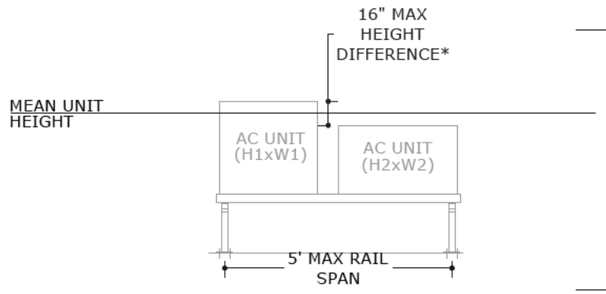

3 UNITS:3 FRAME CONFIGURATION

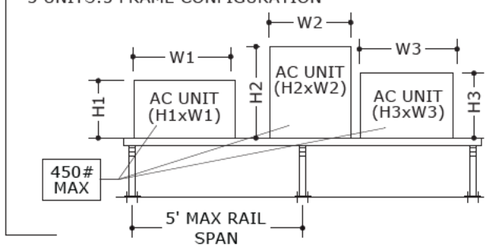

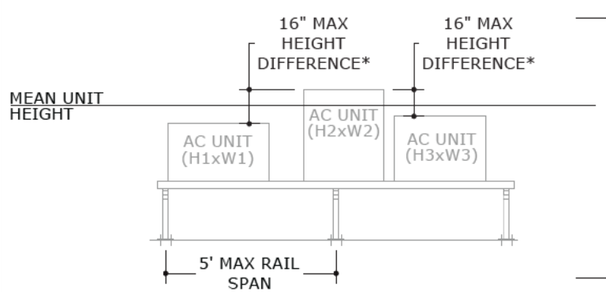

4 UNITS:4 FRAME CONFIGURATION

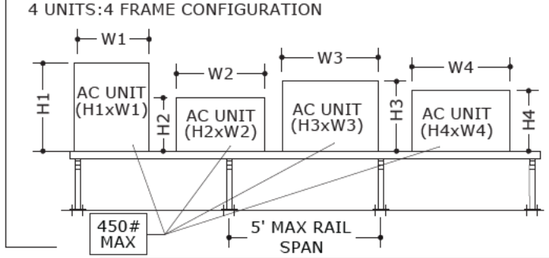

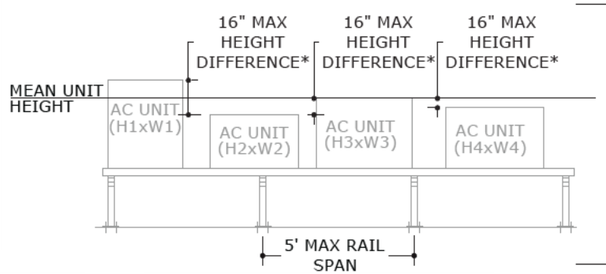

NOTE: THE NUMBER OF UNITS PER STAND CONFIGURATION MAY BE UNLIMITED PROVIDED THAT MULTIPLE UNITS CONFORM TO THE MEAN UNIT HEIGHT & MAXIMUM UNIT FACE AREA RESTRICTIONS UTILIZED IN THE DESIGN SCHEDULES.

*MAXIMUM ALLOWABLE HEIGHT DIFFERENCE BETWEEN ANY UNITS IN A MULTIPLE UNIT CONFIGURATION IS RESTRICTED TO 16" MAX.

FORMULAS USED FOR DETERMINING MEAN UNIT HEIGHT & MAXIMUM UNIT FACE AREA:

1. CALCULATE THE MEAN UNIT HEIGHT BY THE FOLLOWING EQUATION:
   - TWO UNITS: $\frac{H1+H2}{2}$
   - THREE UNITS: $\frac{H1+H2+H3}{3}$
   - FOUR UNITS: $\frac{H1+H2+H3+H4}{4}$
   - "n" UNITS: $\frac{H1+H2+H3+...Hn}{n}$
2. CALCULATE THE MAXIMUM UNIT FACE AREA BY THE FOLLOWING EQUATION:
   - TWO UNITS: (H1xW1)+(H2xW2)
   - THREE UNITS: (H1xW1)+(H2xW2)+(H3xW3)
   - FOUR UNITS: (H1xW1)+(H2xW2)+(H3xW3)+(H4xW4)
   - "n" UNITS: (H1xW1)+...(HnxWn)

EXAMPLE SCENARIO:

1. CONSIDER A FOUR UNIT CONFIGURATION WITH THE DIMENSIONS AS SHOWN BELOW.
2. CALCULATE THE MEAN UNIT HEIGHT.
   - FOUR UNITS: $\frac{H1+H2+H3+H4}{4} = \frac{20"+29"+22"+25"}{4} =$ **24" MEAN UNIT HEIGHT**
3. CALCULATE THE MAXIMUM FACE AREA.
   - FOUR UNITS: (H1xW1)+(H2xW2)+(H3xW3)+(H4xW4) = (20"x21")+(29"x25")+(22"x22")+(25"x27")

= 2304 in² = **16 ft²**

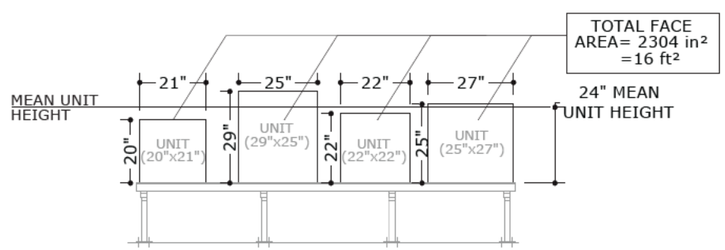

Miami Tech, Inc.
3611 NW 74th St
Miami, FL 33147
(305) 693-7054

Aluminum Stand for Mechanical Units
Florida Statewide Approval
Florida Building Code

REMARKS	DRWN	CHKD	DATE
INIT ISSUE	RN	RN	6/20/2023

COPYRIGHT ENGINEERING EXPRESS®

23-63451

SCALE: NTS UNLESS NOTED

2 OF 5

CAM #24-0670
Exhibit 1
Page 230 of 288

8/25/2023 12:28 PM RICKN c:\users\rickn\engineering express\production - documents\projects\23-\23-63451 aluminum stand for mechanical units\work\2023 fbc\23-63451f aluminum stand for mechanical units.dwg

ALUMINUM STAND DESIGN SCHEDULE

RICHARD NEET, P.E.
PE# 86488 CA# 9885

AUGUST 25, 2023

RICHARD NEET LICENSE No. P.E. 86488 STATE OF FLORIDA PROFESSIONAL ENGINEER

FL42314.1

STAND DESIGN SCHEDULE (MAXIMUM ALLOWABLE LATERAL/UPLIFT PRESSURES)

MAX UNIT HEIGHT	MAX FACE AREA	MAX POST HEIGHT	2 FRAMES		3 FRAMES		4 FRAMES		5 FRAMES		6 FRAMES		7 FRAMES		8 FRAMES		9 FRAMES		10 FRAMES	
			LATERAL	UPLIFT	LATERAL	UPLIFT	LATERAL	UPLIFT	LATERAL	UPLIFT	LATERAL	UPLIFT	LATERAL	UPLIFT	LATERAL	UPLIFT	LATERAL	UPLIFT	LATERAL	UPLIFT
24.0 in	576.0 in² (= 4.0 sqft)	18 in	200 psf	158 psf	200 psf	158 psf	200 psf	158 psf	200 psf	158 psf	200 psf	158 psf	200 psf	158 psf	200 psf	158 psf	200 psf	158 psf	200 psf	158 psf
		24 in	200 psf	158 psf	200 psf	158 psf	200 psf	158 psf	200 psf	158 psf	200 psf	158 psf	200 psf	158 psf	200 psf	158 psf	200 psf	158 psf	200 psf	158 psf
		30 in	200 psf	158 psf	200 psf	158 psf	200 psf	158 psf	200 psf	158 psf	200 psf	158 psf	200 psf	158 psf	200 psf	158 psf	200 psf	158 psf	200 psf	158 psf
30.0 in	900.0 in² (= 6.3 sqft)	18 in	200 psf	158 psf	200 psf	158 psf	200 psf	158 psf	200 psf	158 psf	200 psf	158 psf	200 psf	158 psf	200 psf	158 psf	200 psf	158 psf	200 psf	158 psf
		24 in	200 psf	158 psf	200 psf	158 psf	200 psf	158 psf	200 psf	158 psf	200 psf	158 psf	200 psf	158 psf	200 psf	158 psf	200 psf	158 psf	200 psf	158 psf
		30 in	200 psf	158 psf	200 psf	158 psf	200 psf	158 psf	200 psf	158 psf	200 psf	158 psf	200 psf	158 psf	200 psf	158 psf	200 psf	158 psf	200 psf	158 psf
36.0 in	1008.0 in² (= 7.0 sqft)	18 in	200 psf	158 psf	200 psf	158 psf	200 psf	158 psf	200 psf	158 psf	200 psf	158 psf	200 psf	158 psf	200 psf	158 psf	200 psf	158 psf	200 psf	158 psf
		24 in	200 psf	158 psf	200 psf	158 psf	200 psf	158 psf	200 psf	158 psf	200 psf	158 psf	200 psf	158 psf	200 psf	158 psf	200 psf	158 psf	200 psf	158 psf
		30 in	179 psf	142 psf	200 psf	158 psf	200 psf	158 psf	200 psf	158 psf	200 psf	158 psf	200 psf	158 psf	200 psf	158 psf	200 psf	158 psf	200 psf	158 psf
36.0 in	1152.0 in² (= 8.0 sqft)	18 in	200 psf	158 psf	200 psf	158 psf	200 psf	158 psf	200 psf	158 psf	200 psf	158 psf	200 psf	158 psf	200 psf	158 psf	200 psf	158 psf	200 psf	158 psf
		24 in	188 psf	148 psf	200 psf	158 psf	200 psf	158 psf	200 psf	158 psf	200 psf	158 psf	200 psf	158 psf	200 psf	158 psf	200 psf	158 psf	200 psf	158 psf
		30 in	157 psf	124 psf	200 psf	158 psf	200 psf	158 psf	200 psf	158 psf	200 psf	158 psf	200 psf	158 psf	200 psf	158 psf	200 psf	158 psf	200 psf	158 psf
36.0 in	1440.0 in² (= 10.0 sqft)	18 in	191 psf	151 psf	200 psf	158 psf	200 psf	158 psf	200 psf	158 psf	200 psf	158 psf	200 psf	158 psf	200 psf	158 psf	200 psf	158 psf	200 psf	158 psf
		24 in	150 psf	119 psf	200 psf	158 psf	200 psf	158 psf	200 psf	158 psf	200 psf	158 psf	200 psf	158 psf	200 psf	158 psf	200 psf	158 psf	200 psf	158 psf
		30 in	125 psf	99 psf	188 psf	149 psf	200 psf	158 psf	200 psf	158 psf	200 psf	158 psf	200 psf	158 psf	200 psf	158 psf	200 psf	158 psf	200 psf	158 psf
36.0 in	1728.0 in² (= 12.0 sqft)	18 in	159 psf	126 psf	200 psf	158 psf	200 psf	158 psf	200 psf	158 psf	200 psf	158 psf	200 psf	158 psf	200 psf	158 psf	200 psf	158 psf	200 psf	158 psf
		24 in	125 psf	99 psf	188 psf	148 psf	200 psf	158 psf	200 psf	158 psf	200 psf	158 psf	200 psf	158 psf	200 psf	158 psf	200 psf	158 psf	200 psf	158 psf
		30 in	105 psf	83 psf	157 psf	124 psf	200 psf	158 psf	200 psf	158 psf	200 psf	158 psf	200 psf	158 psf	200 psf	158 psf	200 psf	158 psf	200 psf	158 psf
36.0 in	2160.0 in² (= 15.0 sqft)	18 in	128 psf	101 psf	191 psf	151 psf	200 psf	158 psf	200 psf	158 psf	200 psf	158 psf	200 psf	158 psf	200 psf	158 psf	200 psf	158 psf	200 psf	158 psf
		24 in	100 psf	79 psf	150 psf	119 psf	200 psf	158 psf	200 psf	158 psf	200 psf	158 psf	200 psf	158 psf	200 psf	158 psf	200 psf	158 psf	200 psf	158 psf
		30 in	84 psf	66 psf	125 psf	99 psf	167 psf	132 psf	200 psf	158 psf	200 psf	158 psf	200 psf	158 psf	200 psf	158 psf	200 psf	158 psf	200 psf	158 psf
40.0 in	3200.0 in² (= 22.2 sqft)	18 in	86 psf	68 psf	129 psf	102 psf	172 psf	136 psf	200 psf	158 psf	200 psf	158 psf	200 psf	158 psf	200 psf	158 psf	200 psf	158 psf	200 psf	158 psf
		24 in	68 psf	53 psf	101 psf	80 psf	135 psf	107 psf	169 psf	133 psf	200 psf	158 psf	200 psf	158 psf	200 psf	158 psf	200 psf	158 psf	200 psf	158 psf
		30 in	56 psf	45 psf	85 psf	67 psf	113 psf	89 psf	141 psf	111 psf	169 psf	134 psf	198 psf	156 psf	200 psf	158 psf	200 psf	158 psf	200 psf	158 psf
48.0 in	3840.0 in² (= 26.7 sqft)	18 in	72 psf	57 psf	108 psf	85 psf	143 psf	113 psf	179 psf	142 psf	200 psf	158 psf	200 psf	158 psf	200 psf	158 psf	200 psf	158 psf	200 psf	158 psf
		24 in	56 psf	44 psf	84 psf	67 psf	113 psf	89 psf	141 psf	111 psf	169 psf	133 psf	197 psf	156 psf	200 psf	158 psf	200 psf	158 psf	200 psf	158 psf
		30 in	47 psf	37 psf	71 psf	56 psf	94 psf	74 psf	118 psf	93 psf	141 psf	111 psf	165 psf	130 psf	188 psf	149 psf	200 psf	158 psf	200 psf	158 psf
48.0 in	4800.0 in² (= 33.3 sqft)	18 in	57 psf	45 psf	86 psf	68 psf	115 psf	91 psf	143 psf	113 psf	172 psf	136 psf	200 psf	158 psf	200 psf	158 psf	200 psf	158 psf	200 psf	158 psf
		24 in	45 psf	36 psf	68 psf	53 psf	90 psf	71 psf	113 psf	89 psf	135 psf	107 psf	158 psf	124 psf	180 psf	142 psf	200 psf	158 psf	200 psf	158 psf
		30 in	38 psf	30 psf	56 psf	45 psf	75 psf	59 psf	94 psf	74 psf	113 psf	89 psf	132 psf	104 psf	151 psf	119 psf	169 psf	134 psf	188 psf	149 psf
60.0 in	7200.0 in² (= 50.0 sqft)	18 in	38 psf	30 psf	57 psf	45 psf	77 psf	60 psf	96 psf	76 psf	115 psf	91 psf	134 psf	106 psf	153 psf	121 psf	172 psf	136 psf	191 psf	151 psf
		24 in	30 psf	24 psf	45 psf	36 psf	60 psf	47 psf	75 psf	59 psf	90 psf	71 psf	105 psf	83 psf	120 psf	95 psf	135 psf	107 psf	150 psf	119 psf
		30 in	25 psf	20 psf	38 psf	30 psf	50 psf	40 psf	63 psf	50 psf	75 psf	59 psf	88 psf	69 psf	100 psf	79 psf	113 psf	89 psf	125 psf	99 psf
60.0 in	8640.0 in² (= 60.0 sqft)	18 in	32 psf	25 psf	48 psf	38 psf	64 psf	50 psf	80 psf	63 psf	96 psf	76 psf	112 psf	88 psf	128 psf	101 psf	143 psf	113 psf	159 psf	126 psf
		24 in	25 psf	20 psf	38 psf	30 psf	50 psf	40 psf	63 psf	49 psf	75 psf	59 psf	88 psf	69 psf	100 psf	79 psf	113 psf	89 psf	125 psf	99 psf
		30 in	21 psf	17 psf	31 psf	25 psf	42 psf	33 psf	52 psf	41 psf	63 psf	50 psf	73 psf	58 psf	84 psf	66 psf	94 psf	74 psf	105 psf	83 psf

DESIGN SCHEDULE NOTES:

1. MAXIMUM FRAME-TO-FRAME SPACING SHALL NOT EXCEED 5'-0" O.C. (SEE FRAME SPACING DIRECTIVE)
2. ALLOWABLE STAND DEPTH SHALL BE 20" MINIMUM UP TO 42" MAXIMUM.
3. A "FRAME" CONSISTS OF (2) POSTS CONNECTED WITH (1) CROSS MEMBER. FOR EXAMPLE, A "2 FRAME" STAND WILL HAVE 4 POSTS TOTAL.
4. REFERENCE STAND DETAILS HEREIN FOR STAND COMPONENTS AND INSTALLATION OPTIONS.
5. SEE TIEDOWN DIRECTIVE FOR UNIT TIEDOWN REQUIREMENTS AND LIMITATIONS.
6. UNIT OR STAND DIMENSIONS OUTSIDE THE PARAMETERS LISTED IN THIS SCHEDULE WILL REQUIRE SEPARATE SITE SPECIFIC ENGINEERING.
7. REQUIRED DESIGN PRESSURES FOR INSTALLATION SHALL BE CALCULATED ON A SITE SPECIFIC BASIS AND BE LESS THAN OR EQUAL TO THE MAX ALLOWABLE PRESSURES LISTED IN THIS DRAWING.
8. INTERPOLATION BETWEEN UNIT HEIGHTS, FACE AREA OR POST HEIGHT IS **NOT** PERMITTED.
9. THE UNIT DEPTH SHALL NOT EXCEED THE MAX UNIT HEIGHT LISTED. SEE THE TIEDOWN STRAP SCHEDULE FOR MINIMUM ALLOWABLE UNIT DEPTHS.

IF TOTAL UNIT WIDTH REQUIRES FRAME SPACING GREATER THAN 5', AN ADDITIONAL FRAME SHALL BE ADDED AT MID SPAN TO MEET THE 5' MAX SPACING REQUIREMENT (EVEN IF DESIGN SCHEDULE ALLOWS FOR LESSER FRAMES)

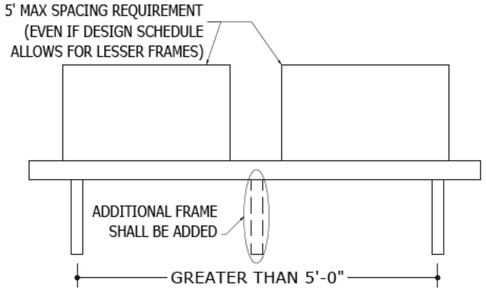

FRAME SPACING DIRECTIVE

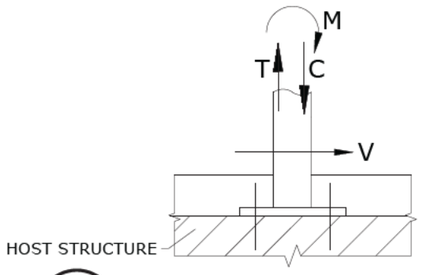

1/3 BASE PLATE REACTIONS
NTS

ENGINEER OF RECORD TO VERIFY THAT THE HOST STRUCTURE CAN SUPPORT THE SERVICE LOAD REACTIONS LISTED BELOW:

M = 5 KIP-IN
V = 0.5 KIPS
T = C = 0.8 KIPS

ENGINEERING EXPRESS®
POSTAL ADDRESS:
401 W. ATLANTIC AVE R10 BOX 219
DELRAY BEACH, FL 33444
ENGINEERINGEXPRESS.COM

Miami Tech, Inc.
3611 NW 74th St
Miami, FL 33147
(305) 693-7054

Aluminum Stand for Mechanical Units
Florida Statewide Approval
Florida Building Code

REMARKS	DRWN	CHKD	DATE
INIT ISSUE	RN	RN	6/20/2023

COPYRIGHT ENGINEERING EXPRESS®

23-63451

SCALE: NTS UNLESS NOTED

3 OF 5

8/25/2023 12:28 PM RICKN c:\users\rickn\engineering express\production - documents\projects\23-\23-63451 aluminum stand for mechanical units.dwg

FRAME ASSEMBLY & UNIT TIE-DOWN DETAILS:

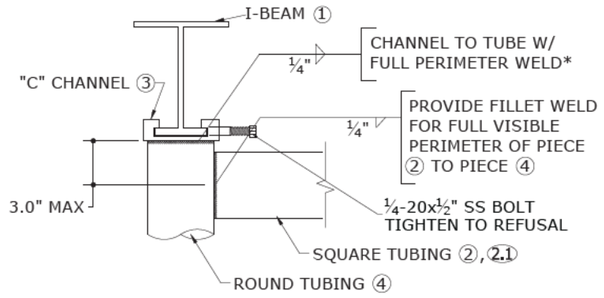

1/4 FRAME ASSEMBLY DETAIL
NTS DETAIL

THIS DETAIL IS APPLICABLE FOR UNITS UP TO 54" TALL MAX. UNITS TALLER THAN 54" REQUIRE SITE SPECIFIC OR SEPARATE TIEDOWN ENGINEERING

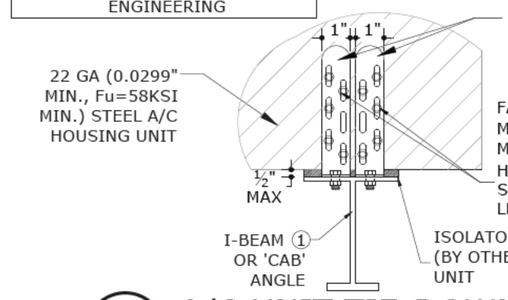

2/4 A/C UNIT TIE-DOWN DETAIL
NTS (SEE TIEDOWN STRAP SCHED. FOR STRAP REQUIREMENTS)

NOTE: UNIT TIEDOWN DETAILS MAY ALSO BE USED TO ANCHOR THE UNIT TO THE SUPPORT ANGLE SHOWN ON NEXT SHEET. (I.E. I-BEAM CAN BE SUBSTITUTED WITH ANGLE SUPPORT AS BASE MATERIAL)

TIEDOWN STRAP SCHEDULE

MAX UNIT HEIGHT (in)	MIN UNIT DEPTH (in)	MAX LATERAL PRESSURE (psf)	NO. OF STRAPS REQUIRED (PER UNIT)
UP TO 24	12-19	UP TO 80	0
		UP TO 120	0
		UP TO 200	2
	20	UP TO 80	0
		UP TO 120	0
		UP TO 200	0
UP TO 30	12-19	UP TO 80	0
		UP TO 120	2
		UP TO 200	2
	20	UP TO 80	0
		UP TO 120	0
		UP TO 200	0
UP TO 36	12-19	UP TO 80	0
		UP TO 120	2
		UP TO 200	3
	20	UP TO 80	0
		UP TO 120	0
		UP TO 200	2
UP TO 40	14-23	UP TO 80	0
		UP TO 120	2
		UP TO 200	3
	24	UP TO 80	0
		UP TO 120	2
		UP TO 200	3
UP TO 48	16-23	UP TO 80	3
		UP TO 120	4
		UP TO 200	5
	24	UP TO 80	0
		UP TO 120	2
		UP TO 200	4
UP TO 54	16-23	UP TO 80	4
		UP TO 120	5
		UP TO 200	6
	24	UP TO 80	2
		UP TO 120	3
		UP TO 200	5
UP TO 60	SITE SPECIFIC DESIGN REQUIRED		

TIEDOWN SCHEDULE NOTES:
1. THE TIEDOWN CLIP AND STRAP REQUIREMENTS ON THIS SHEET DO NOT ACCOUNT FOR INTEGRATED FEET OR RAILS ON THE MECHANICAL UNITS. IF INTEGRATED TIEDOWN FEET OR RAILS EXIST ON THE UNIT, SEPARATE ENGINEERING IS REQUIRED.
2. THE TIEDOWN REQUIREMENTS ON THIS SHEET ACCOUNT FOR RECTANGULAR SHAPED UNITS ONLY. CIRCULAR OR OTHER SHAPED MECHANICAL EQUIPMENT (FANS, DUCTWORK, PIPES, ETC.) SHALL BE CERTIFIED SEPARATELY.

*C-CHANNEL TO POST WELD NOTE:
IN AREAS WHERE ¼" WELD DIAMETER CANNOT BE ACHIEVED, CONTINUE WELD AROUND FULL PERIMETER OF POST TO PREVENT WATER INFILTRATION. WELD DIAMETER WILL DECREASE TO 0.05" ALONG C-CHANNEL EDGE. SEE DETAIL BELOW.

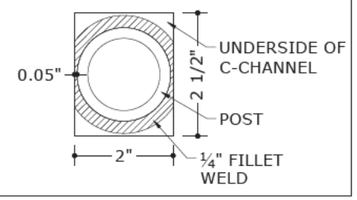

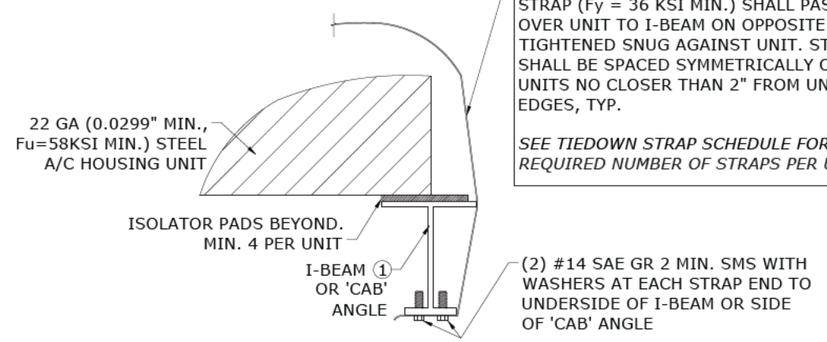

3/4 TIE-DOWN STRAP DETAIL**
NTS *SHALL BE USED **IN COMBINATION** WITH ANY A/C UNIT TIE-DOWN DETAIL ON THIS SHEET

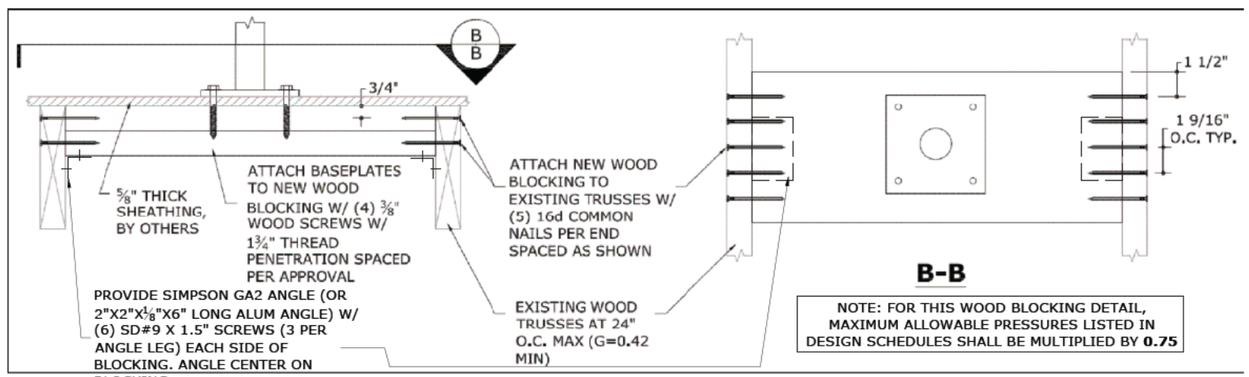

4/4 ALT. BASEPLATE TO WOOD TRUSS ATTACHMENT (2X10 WOOD BLOCKING)
SCALE: NTS WOOD (G=0.55 MIN.)

RICHARD NEET, P.E.
PE# 86488 CA# 9885

AUGUST 25, 2023

RICHARD NEET LICENSE No. P.E. 86488 STATE OF FLORIDA PROFESSIONAL ENGINEER

FL42314.1

ENGINEERING EXPRESS®
POSTAL ADDRESS:
401 W. ATLANTIC AVE R10 BOX 219
DELRAY BEACH, FL 33444
ENGINEERINGEXPRESS.COM

Miami Tech, Inc.
3611 NW 74th St
Miami, FL 33147
(305) 693-7054

Aluminum Stand for Mechanical Units
Florida Statewide Approval
Florida Building Code

REMARKS	DRWN	CHKD	DATE
INIT ISSUE	RN	RN	6/20/2023

COPYRIGHT ENGINEERING EXPRESS®

23-63451

SCALE: NTS UNLESS NOTED

4 OF 5

8/25/2023 12:29 PM RICKN c:\users\rickn\engineering express\production - documents\projects\23-\23-63451 aluminum stand for mechanical units\work\2023 fbc\23-63451f aluminum stand for mechanical units.dwg

8/25/2023 12:29 PM RICKN c:\users\rickn\engineering express\production - documents\projects\23-\23-63451 aluminum stand for mechanical units\work\2023 fbc\23-63451f aluminum stand for mechanical units.dwg

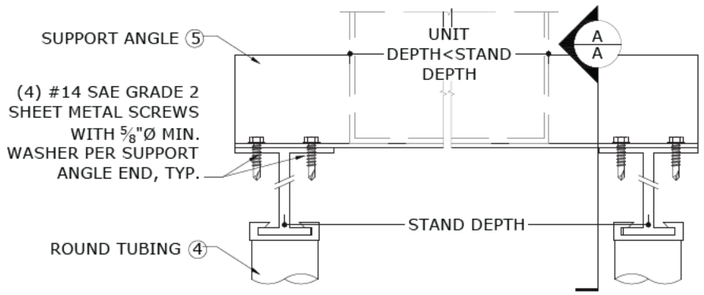

SUPPORT ANGLE ATTACHMENT DETAIL

1A / 5 NTS

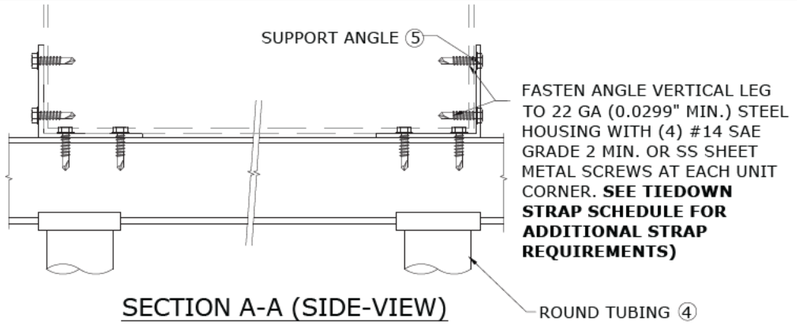

SECTION A-A (SIDE-VIEW)

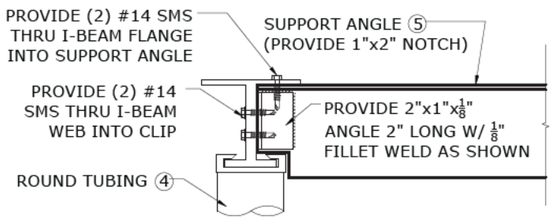

SUPPORT ANGLE ATTACHMENT DETAIL

1B / 5 NTS

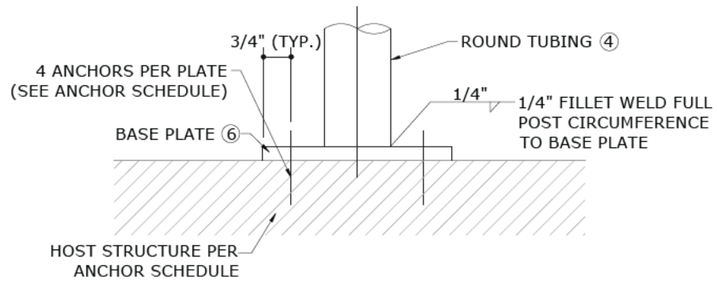

STANDARD BASE PLATE ATTACHMENT DETAIL

3 / 5 NTS

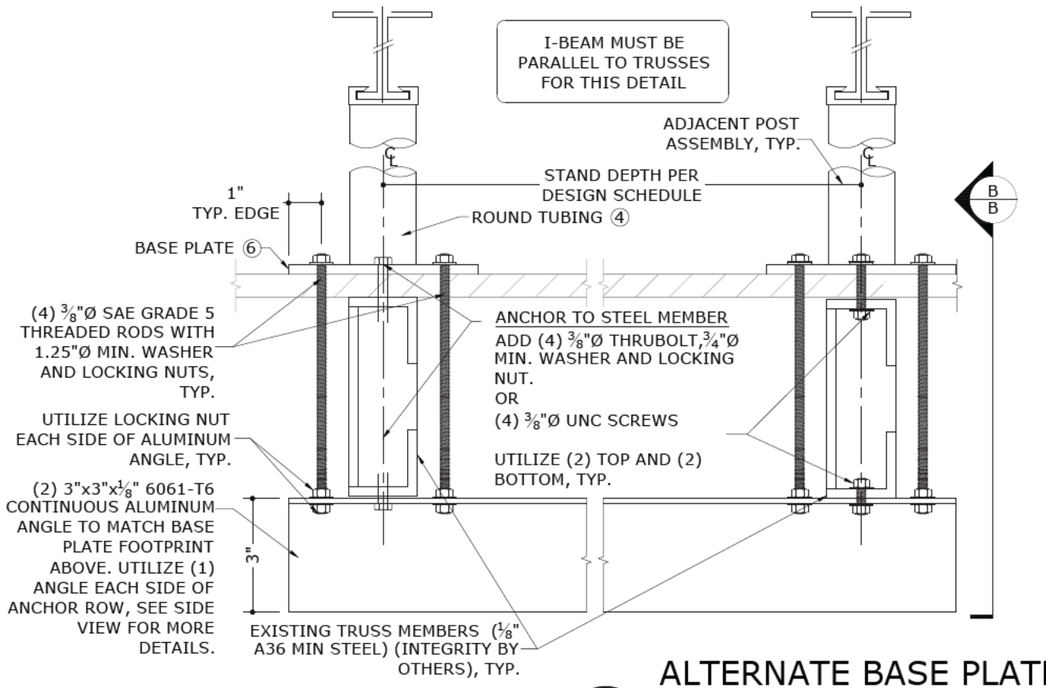

ALTERNATE BASE PLATE ATTACHMENT AT STEEL TRUSS MEMBERS

4 / 5 NTS

DETAIL

ANCHOR SCHEDULE

ANCHOR TYPE	HOST STRUCTURE	ANCHOR DESCRIPTION
1	STEEL	3/8"Ø SAE GRADE 5 SHEET METAL SCREWS WITH 1"Ø MIN. WASHER, TO STRUCTURAL A36 STEEL MEMBERS (3/16" MIN HOST THICKNESS)
2A	CONCRETE (3.0 KSI MIN)	3/8"Ø DEWALT CARBON STEEL SCREW-BOLT CONCRETE ANCHOR WITH 1"Ø MIN. WASHER, 2-1/2" EMBEDMENT & 6" MIN EDGE DISTANCE, SEE BASE PLATE COMPONENT #6 (ON SHEET 2) FOR TYPICAL ANCHOR SPACING.
2B	CONCRETE (5.0 KSI MIN)	1/2"Ø DEWALT MINI-DROPIN ANCHOR WITH 1.0" EMBEDMENT & 6" MIN EDGE DISTANCE, SEE BASE PLATE COMPONENT #6 (ON SHEET 2) FOR TYPICAL ANCHOR SPACING. **NOTE: MAX ALLOWABLE PRESSURES LISTED IN THE STAND DESIGN SCHEDULE SHALL BE MULTIPLIED BY 0.8 WHEN USING THIS ANCHOR OPTION**
3	WOOD*	***SEE DETAIL 4/4 OR SITE SPECIFIC ENGINEERING IS REQUIRED**
4	STEEL	3/8"Ø SAE GRADE 5 THRUBOLT WITH 1"Ø MIN. WASHER & NUT, TO STRUCTURAL A36 STEEL MEMBERS (3/16" MIN HOST THICKNESS)

ANCHOR NOTES:

1. ANCHORS SHALL BE INSTALLED IN ACCORDANCE WITH MANUFACTURERS' RECOMMENDATIONS.
2. ENSURE MINIMUM EDGE DISTANCE AS NOTED IN ANCHOR SCHEDULE FOR EACH ANCHOR.
3. WOOD HOST STRUCTURE SHALL BE "SOUTHERN PINE" G=0.55 OR GREATER DENSITY. ALL CONCRETE SUBSTRATE SHALL BE UN-CRACKED CONCRETE AND SHALL HAVE MINIMUM COMPRESSIVE STRENGTH OF 3000 PSI, U.N.O. CONCRETE SUBSTRATE THICKNESS SHALL BE GREATER THAN OR EQUAL TO 1.5xANCHOR EMBEDMENT. INSTALL CONCRETE ANCHORS TO UN-CRACKED CONCRETE ONLY.
4. MINIMUM EMBEDMENT SHALL BE AS NOTED IN ANCHOR SCHEDULE. MINIMUM EMBEDMENT AND EDGE DISTANCE EXCLUDES ROOFING FINISHES.
5. WHERE EXISTING STRUCTURE IS WOOD TRUSSES, EXISTING CONDITIONS MAY VARY. FIELD VERIFY THAT FASTENERS ARE INTO ADEQUATE WOOD TRUSS MEMBERS, NOT INTO PLYWOOD.

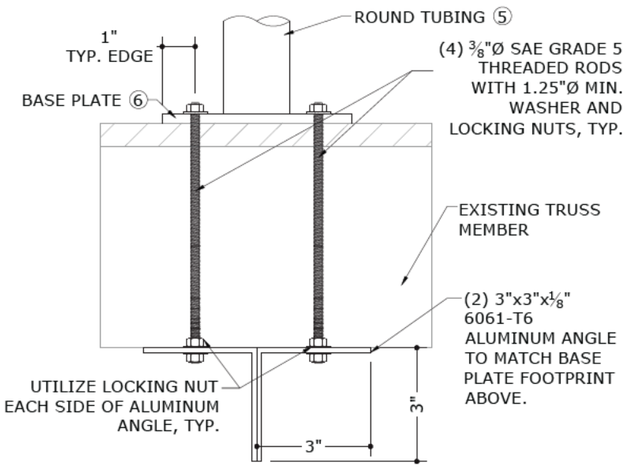

SECTION B-B (SIDE-VIEW)

RICHARD NEET, P.E.
PE# 86488 CA# 9885

AUGUST 25, 2023

RICHARD NEET LICENSE No. P.E. 86488 STATE OF FLORIDA PROFESSIONAL ENGINEER

FL42314.1

ENGINEERING EXPRESS®
POSTAL ADDRESS:
401 W. ATLANTIC AVE R10 BOX 219
DELRAY BEACH, FL 33444
ENGINEERINGEXPRESS.COM

Miami Tech, Inc.
3611 NW 74th St
Miami, FL 33147
(305) 693-7054

Aluminum Stand for Mechanical Units
Florida Statewide Approval
Florida Building Code

REMARKS	DRWN	CHKD	DATE
INIT ISSUE	RN	RN	6/20/2023

COPYRIGHT ENGINEERING EXPRESS®

23-63451

SCALE: NTS UNLESS NOTED

5 OF 5

SYS-1 - System Design Summary

General Requirements

Room Temperature: **35 °F**	Ambient Temperature: **95 °F**	Design Run-time: **18 Hrs**	Required Capacity: **8241 BTUH**
Design TD: **10 °F**	Refrigerant: **R-404A**	Altitude: **500 FT**	

Selected Equipment

Line Item	Quantity	Type	Tag	Description
1.0	1	System	SYS-1	R-404A - Refrigeration Equipment Match 1
1.1	1	Condensing Unit	CDU-1	WFO100M4SEA
1.2	1	Unit Cooler	UC-1	WL6A094DDA

System Balance

Balanced Capacity: **9,714.7** BTUH	Evap. T.D.: **10.5** °F	Line Loss: **5** °F	Suction Temp: **19.5** °F	Calc. Run-Time: **15.3** Hrs

Quotes are valid for 30 Days. Due to ongoing product development, RapidSpec and its export documentation is subject to change without notice. In no event shall HTPG be liable for special or consequential damages in connection with the use or output of RapidSpec.

SYS-1 - CDU-1 - Product Information

General Data

Model Line: **NEXT-GEN MINI-CON**	Model Number: **WFO100M4SEA**	Flooded: **Yes**
Refrigerant: **R-404A**	Voltage: **208-230/3/60**	Compressor Type: **SCROLL**

Performance Data

Ambient Temp: **95** °F	Suction Temp: **20** °F	Capacity: **8,900** BTUH

Electrical Data

Compressor RLA: **3.6**	Compressor LRA: **38.9**	Total Condenser Fan FLA: **0.5**
MCA: **15**	MOPD: **15**	

Physical Data

Number of Compressors: **1**	Compressor Model: **ZB08KAE**	Compressor HP: **1**
Number of Condenser Fans: **1**	Approx. Ship Weight: **195** lbs	Sound Data: **70** dBA
Liquid Line: **3/8** in.	Suction Line: **5/8** in.	
Pump Down Capacity (%): **90**	Pump Down Capacity: **5.9** lbs	

Option Data

Mounted Option	AIR DEFROST TIMER
Mounted Option	LIQUID LINE WITH COMPONENTS: SEALED FILTER & SIGHT GLASS
Mounted Option	STANDARD RECEIVER
Mounted Option	FIXED HIGH/ADJUSTABLE LOW PRESSURE CONTROL

Compliance Data

AWEF: **7.60**

Notes

Quotes are valid for 30 Days. Due to ongoing product development, RapidSpec and its export documentation is subject to change without notice. In no event shall HTPG be liable for special or consequential damages in connection with the use or output of RapidSpec. MCA/MOPD and Defrost Kit selection will be confirmed at time of purchase. Submittal data shown represents design conditions.

Dimensional Drawing

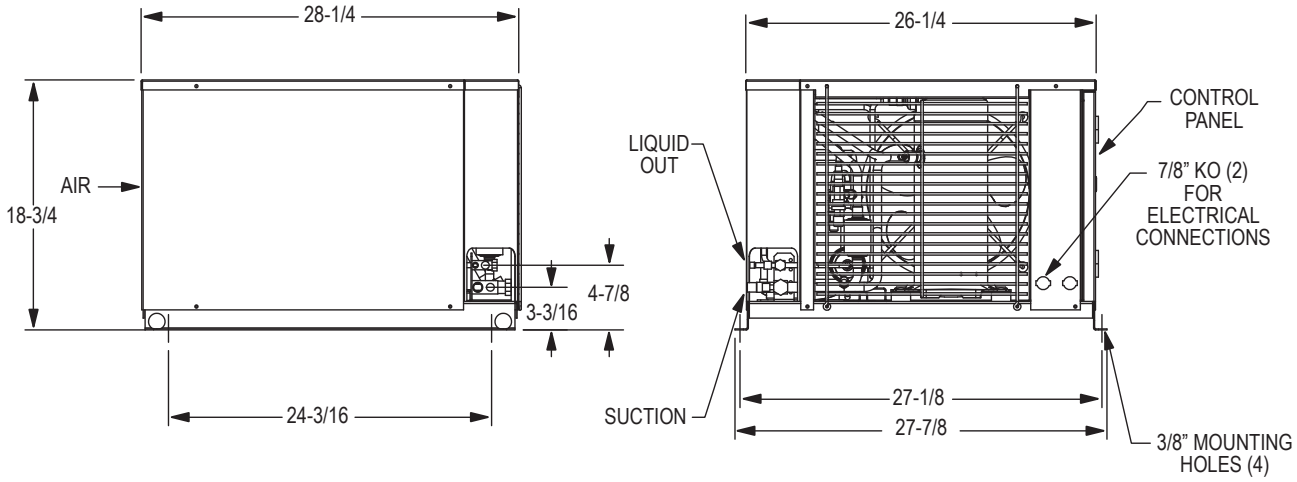

Standard Features

- All-weather Galvanized steel painted housing
- Generously sized high efficiency condenser, enhanced copper tubes/aluminum fins
- Integral Liquid Subcooling Circuit provides subcooled liquid to the expansion device
- Crankcase heater
- Large electrical panel with hinged/removable door
- Color coded point-to-point wiring
- Quick access to shut off valves from exterior
- UL/cUL certified for use with multiple refrigerants
- UL/cUL listed for outdoor use
- Flooded models include flooded head pressure control
- Non flooded models include mild ambient fan cycle control

Certifications

SYS-1 - UC-1 - Product Information

General Data

Model Line: **NEXT-GEN ALL-TEMP**	Model Number: **WL6A094DDA**	Motors: **DUAL SPEED EC MOTOR**
Unit Voltage: **208-230/1/60**	Defrost Type: **AIR DEFROST**	Refrigerant: **R-404A**
Fins Per Inch: **6**	Number of Fans: **2**	

Performance Data

Suction Temp: **25** °F	T.D: **10.5** °F	Capacity: **9,856.9** BTUH	CFM: **1570**

Electrical Data

Motor Voltage: **208-230/1/60**	Total Unit Fan Motor Amps: **1**	
Heater Voltage: **208-230/1/60**	Heater Amps: **0**	Heater Watts: **0**
MCA: **15**	MOPD: **20**	

Physical Data

Liquid Line: **3/8** in.	Suction Line: **5/8** in.	Approx. Ship Weight: **55** lbs

Option Data

Compliance Data

AWEF: **9.00**

Notes

Quotes are valid for 30 Days. Due to ongoing product development, RapidSpec and its export documentation is subject to change without notice. In no event shall HTPG be liable for special or consequential damages in connection with the use or output of RapidSpec. Submittal data shown represents design conditions.

Dimensional Drawing

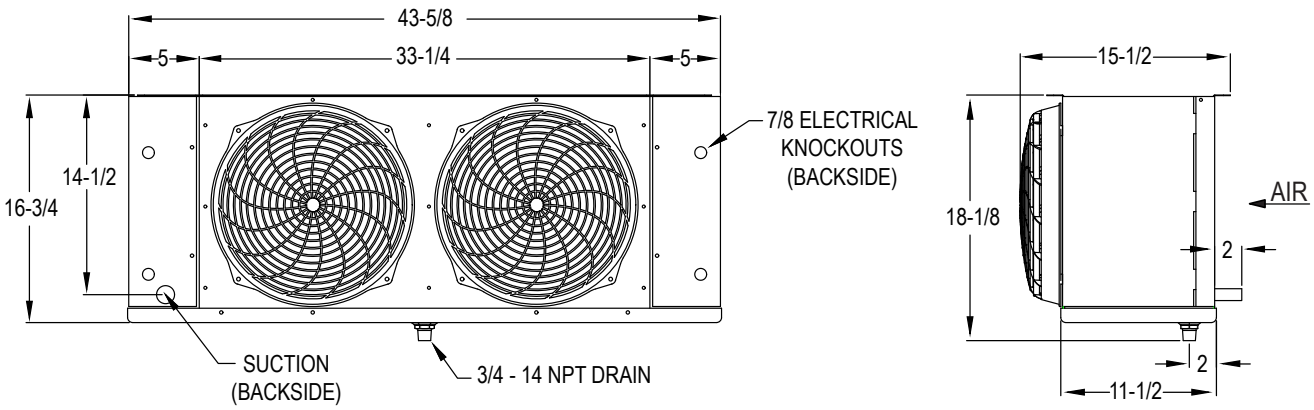

Standard Features

- Embossed aluminum housing
- Enhanced copper tube and aluminum fin coil construction
- Sweat connections
- Thermal overload protection
- High efficiency fan guard design and deep draw venturi
- Heavy-duty fans are balanced for vibration-free operation
- Fan sections are baffled to prevent short cycling of air
- Slide out end panels
- Removable drain pan
- Mounts flush to the ceiling
- Top pan includes 1/2” wide slotted mounting points
- UL/cUL certified for use with multiple refrigerants
- NSF approved for use in food preparation areas

Certifications

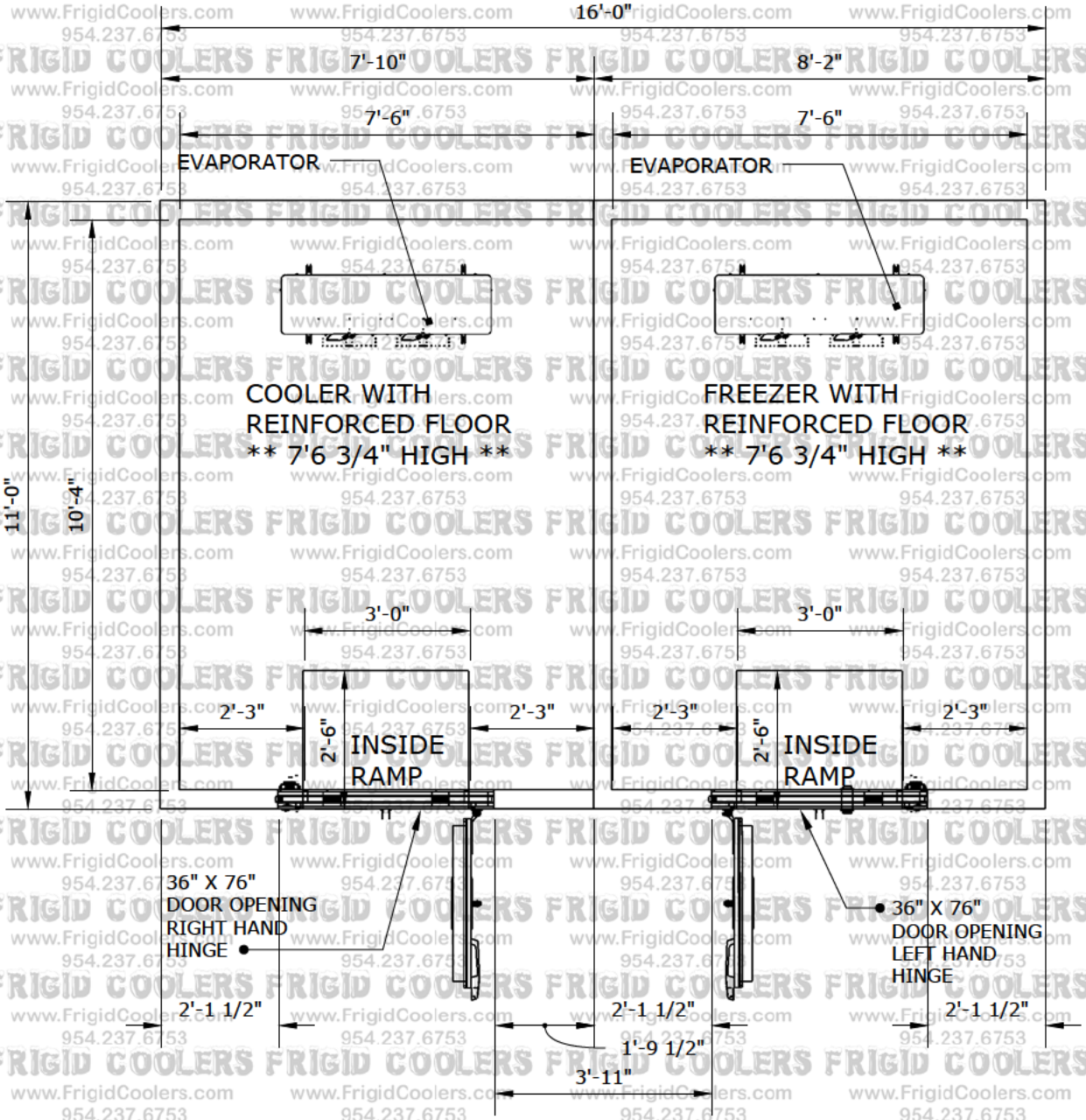

24-0427MW	Not To Scale	COMBINATION COOLER AND FREEZER WITH REINFORCED FLOOR *** 7'6 3/4" ***

FRIGID COOLERS
www.FrigidCoolers.com
954.237.6753

15751 Sheridan Street - Suite 115
Ft. Lauderdale, FL 33331
Phone: 954-237-6753
Fax: 954-237-6302
Email: sales@frigidcoolers.com

This is your approval drawing. Fabrication will not begin until Frigid Coolers receives the drawing, SIGNED and DATED as Approved.

This drawing is property of Frigid Coolers LLC. Copyright is reserved by Frigid Coolers LLC and the drawing is issued on the condition that is NOT copied, reproduced, retained or disclosed to any unauthorized person, either wholly or in part without consent in writing from Frigid Coolers LLC.

FRIGID COOLERS www.FrigidCoolers.com 954.237.6753

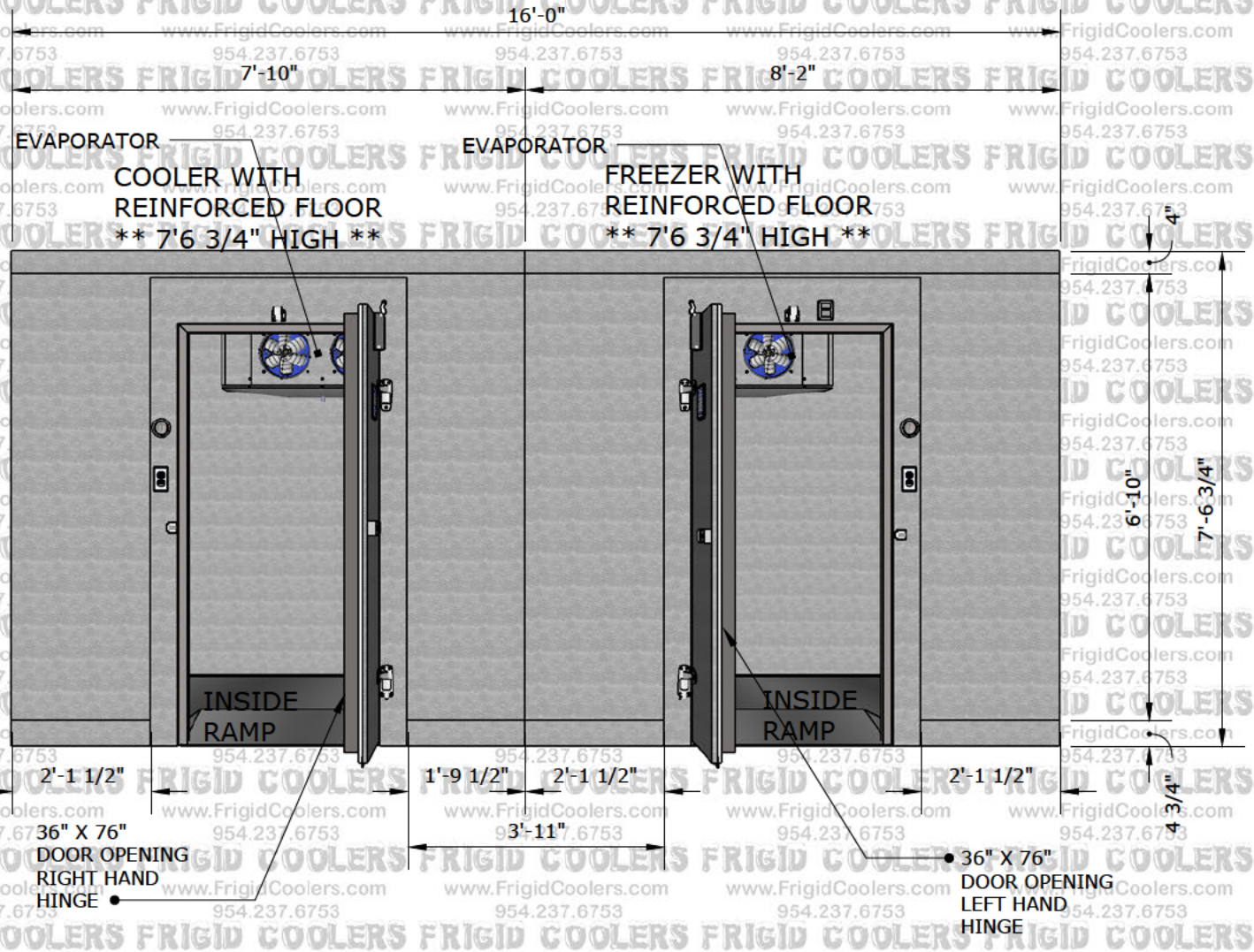

24-0427MW	Not To Scale	COMBINATION COOLER AND FREEZER WITH REINFORCED FLOOR *** 7'6 3/4" ***

FRIGID COOLERS
www.FrigidCoolers.com
954.237.6753

15751 Sheridan Street - Suite 115
Ft. Lauderdale, FL 33331
Phone: 954-237-6753
Fax: 954-237-6302
Email: sales@frigidcoolers.com

This is your approval drawing. Fabrication will not begin until Frigid Coolers receives the drawing, SIGNED and DATED as Approved.

This drawing is property of Frigid Coolers LLC.
Copyright is reserved by Frigid Coolers LLC and the drawing is issued on the condition that is NOT copied, reproduced, retained or disclosed to any unauthorized person, either wholly or in part without consent in writing from Frigid Coolers LLC.

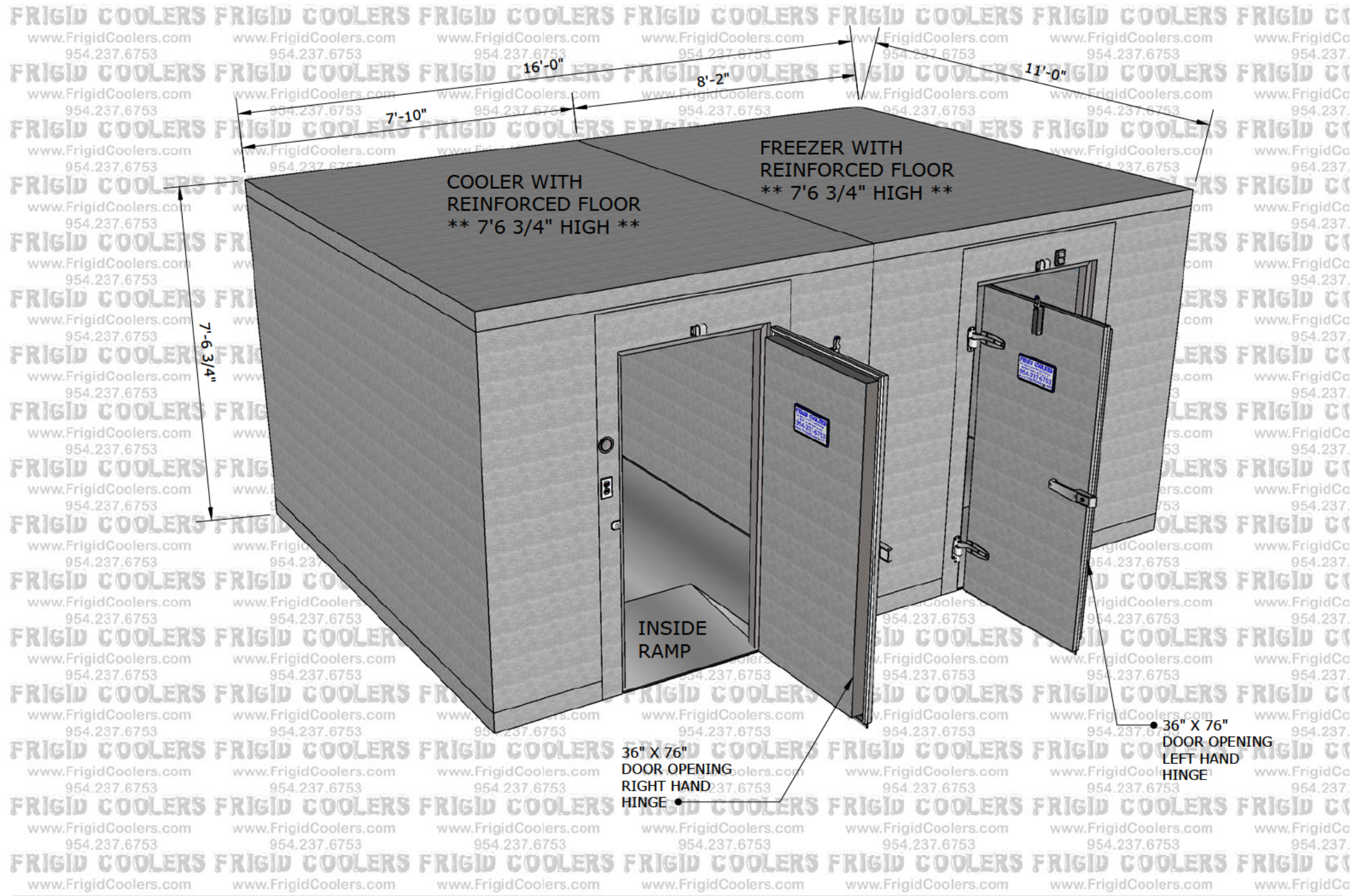

24-0427MW	Not To Scale	COMBINATION COOLER AND FREEZER WITH REINFORCED FLOOR *** 7'6 3/4" ***

FRIGID COOLERS
www.FrigidCoolers.com
954.237.6753

15751 Sheridan Street - Suite 115
Ft. Lauderdale, FL 33331
Phone: 954-237-6753
Fax: 954-237-6302
Email: sales@frigidcoolers.com

This is your approval drawing. Fabrication will not begin until Frigid Coolers receives the drawing, SIGNED and DATED as Approved.

This drawing is property of Frigid Coolers LLC.
Copyright is reserved by Frigid Coolers LLC and the drawing is issued on the condition that is NOT copied, reproduced, retained or disclosed to any unauthorized person, either wholly or in part without consent in writing from Frigid Coolers LLC.

GENERAL SPECIFICATIONS

➤ FINISH:

Walls and ceilings: Standard 26 Gauge Stucco Embossed Galvalume Finish with a weather Protective aluminum and zinc alloy
Other options include Stainless Steel and white finished stucco.

➤ FLOORS:

Heavy gauge smooth aluminum and optional stainless steel.

➤ INSULATION:

4" TRP for walk-in coolers and freezers with exceeds new federal requirements.

COOLERS:

4" Thermal Resistant Panel*
R-Value .292 / ASTM Test C-518
Flame spread and smoke development 5/190 ASTM Test E84

FREEZER:

4" Thermal Resistant Panel*
R-Value .34 / ASTM Test C-518
Flame spread and smoke development 15/250 ASTM Test E84

➤ JOINT:

Panels have factory installed, NSF approved gasket, which insures a proper seal and better appearance. Standard gaskets are 1/8" closed cell neoprene.

➤ DOORS:

Standard door size is 34" X 76". Includes: Self closing hinges, automatic door closer, keyed entry latch with interior safety release, vapor proof light fixture, pilot light switch and dial thermometer. Freezer doors include anti condensate heater wire and pressure relief vent.

➤ CONSTRUCTION:

Panel facing shall be laminated to rigid insulation with urethane based adhesive under pressure to insure a strong and permanent bond. Panels are of 100% insulation (non wood construction) and all panel edges are tongue and groove. Panel connectors are factory installed rotary cam type speed locks. Floor panels are designed to sustain a load of 500 lbs. per square foot. Where floor panels are not required, 1" x 1" aluminum angle or NSF plastic screed will be furnished to insure a proper seal.

➤ INSTALLATION:

To help reduce installation time, all panels are marked to correspond with the installation drawing supplied by the factory. Also provided, one allen wrench along with miscellaneous installation materials.

* Patent Pending

PANEL CONSTRUCTION

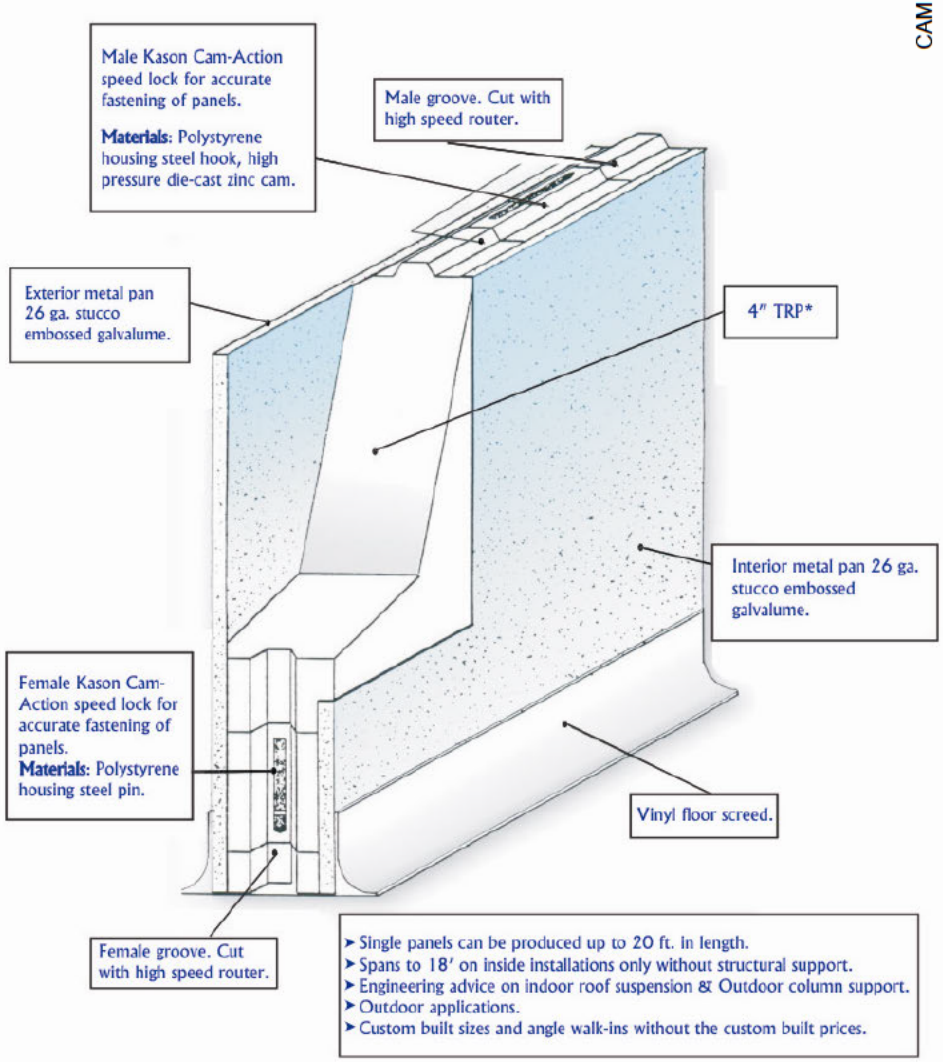

- Single panels can be produced up to 20 ft. in length.
- Spans to 18' on inside installations only without structural support.
- Engineering advice on indoor roof suspension & Outdoor column support.
- Outdoor applications.
- Custom built sizes and angle walk-ins without the custom built prices.

* Patent Pending

SYS-1 - System Design Summary

General Requirements

Room Temperature: **-10 °F**	Ambient Temperature: **95 °F**	Design Run-time: **18 Hrs**	Required Capacity: **9744 BTUH**
Design TD: **10 °F**	Refrigerant: **R-404A**	Altitude: **500 FT**	

Selected Equipment

Line Item	Quantity	Type	Tag	Description
1.0	1	System	SYS-1	R-404A - Refrigeration Equipment Match 1
1.1	1	Condensing Unit	CDU-1	WFO350L4SEA
1.2	1	Unit Cooler	UC-1	WL6E105DDA

System Balance

Balanced Capacity: **11,704** BTUH	Evap. T.D.: **11.3** °F	Line Loss: **5** °F	Suction Temp: **-26.3** °F	Calc. Run-Time: **15** Hrs

Quotes are valid for 30 Days. Due to ongoing product development, RapidSpec and its export documentation is subject to change without notice. In no event shall HTPG be liable for special or consequential damages in connection with the use or output of RapidSpec.

SYS-1 - CDU-1 - Product Information

General Data

Model Line: **NEXT-GEN MINI-CON**	Model Number: **WFO350L4SEA**	Flooded: **Yes**
Refrigerant: **R-404A**	Voltage: **208-230/3/60**	Compressor Type: **SCROLL**

Performance Data

Ambient Temp: **95** °F	Suction Temp: **-25** °F	Capacity: **10,780** BTUH

Electrical Data

Compressor RLA: **10.9**	Compressor LRA: **88**	Total Condenser Fan FLA: **1**
MCA: **25.6**	MOPD: **35**	

Physical Data

Number of Compressors: **1**	Compressor Model: **ZF11K4E**	Compressor HP: **3.5**
Number of Condenser Fans: **2**	Approx. Ship Weight: **255** lbs	Sound Data: **73** dBA
Liquid Line: **3/8** in.	Suction Line: **7/8** in.	
Pump Down Capacity (%): **90**	Pump Down Capacity: **13.6** lbs	

Option Data

Mounted Option	ADD/MODIFY DEFROST KIT: ED5
Mounted Option	LIQUID LINE WITH COMPONENTS: SEALED FILTER & SIGHT GLASS
Mounted Option	STANDARD RECEIVER
Mounted Option	FIXED HIGH/ADJUSTABLE LOW PRESSURE CONTROL

Compliance Data

AWEF: **3.15**

Notes

Quotes are valid for 30 Days. Due to ongoing product development, RapidSpec and its export documentation is subject to change without notice. In no event shall HTPG be liable for special or consequential damages in connection with the use or output of RapidSpec. MCA/MOPD and Defrost Kit selection will be confirmed at time of purchase. Submittal data shown represents design conditions.

Dimensional Drawing

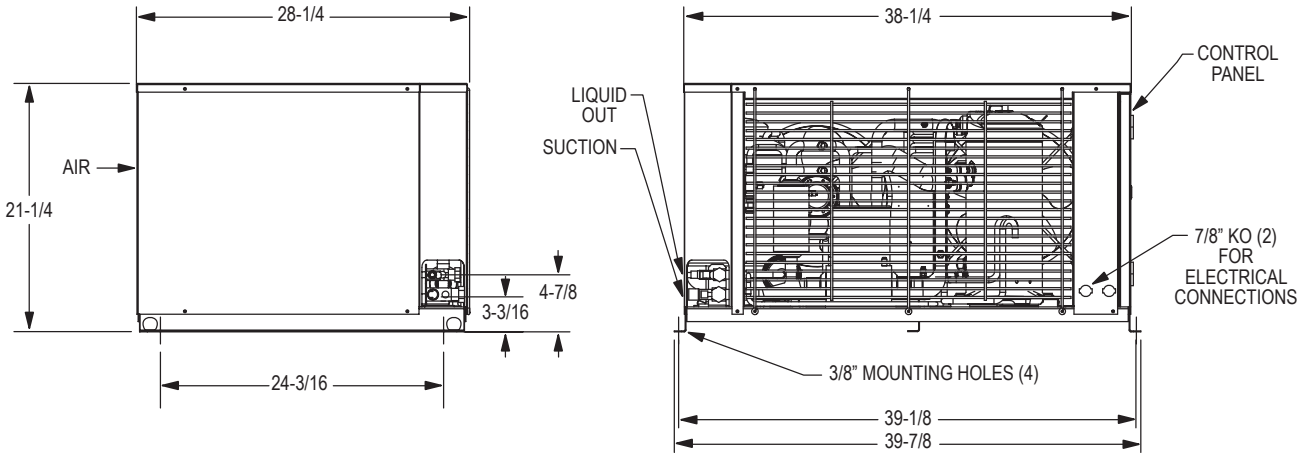

Standard Features

- All-weather Galvanized steel painted housing
- Generously sized high efficiency condenser, enhanced copper tubes/aluminum fins
- Integral Liquid Subcooling Circuit provides subcooled liquid to the expansion device
- Crankcase heater
- Large electrical panel with hinged/removable door
- Color coded point-to-point wiring
- Quick access to shut off valves from exterior
- UL/cUL certified for use with multiple refrigerants
- UL/cUL listed for outdoor use
- Flooded models include flooded head pressure control
- Non flooded models include mild ambient fan cycle control

Certifications

SYS-1 - UC-1 - Product Information

General Data

Model Line: **NEXT-GEN ALL-TEMP**	Model Number: **WL6E105DDA**	Motors: **DUAL SPEED EC MOTOR**
Unit Voltage: **208-230/1/60**	Defrost Type: **ELECTRIC DEFROST**	Refrigerant: **R-404A**
Fins Per Inch: **6**	Number of Fans: **2**	

Performance Data

Suction Temp: **-20** °F	T.D: **11.3** °F	Capacity: **11,875.3** BTUH	CFM: **1550**

Electrical Data

Motor Voltage: **208-230/1/60**	Total Unit Fan Motor Amps: **1**	
Heater Voltage: **208-230/1/60**	Heater Amps: **9.8**	Heater Watts: **2250**
MCA: **15**	MOPD: **20**	

Physical Data

Liquid Line: **3/8** in.	Suction Line: **7/8** in.	Approx. Ship Weight: **62** lbs

Option Data

Mounted Option	Fixed Defrost Control / Fan Delay Switch

Compliance Data

AWEF: **4.15**

Notes

Quotes are valid for 30 Days. Due to ongoing product development, RapidSpec and its export documentation is subject to change without notice. In no event shall HTPG be liable for special or consequential damages in connection with the use or output of RapidSpec. Submittal data shown represents design conditions.

Dimensional Drawing

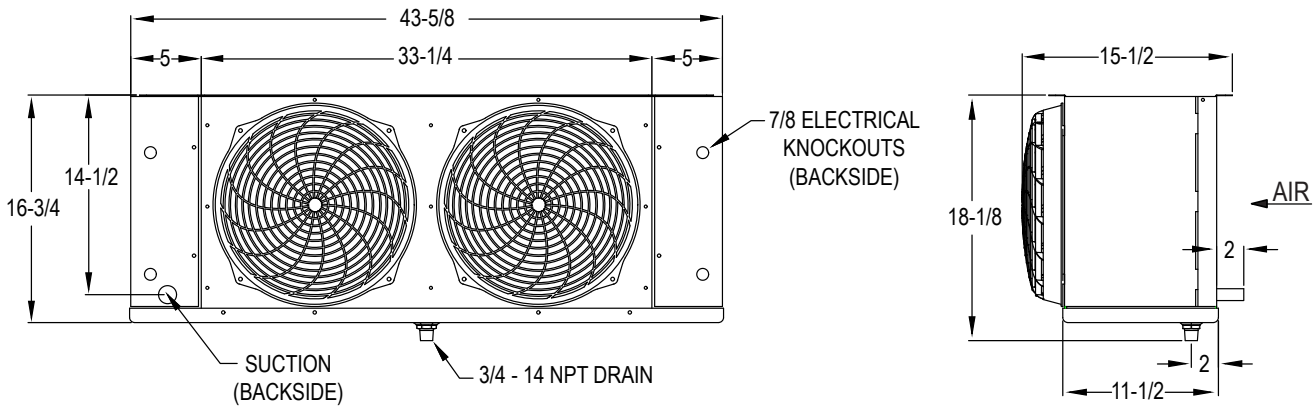

Standard Features

- Embossed aluminum housing
- Enhanced copper tube and aluminum fin coil construction
- Sweat connections
- Thermal overload protection
- High efficiency fan guard design and deep draw venturi
- Heavy-duty fans are balanced for vibration-free operation
- Fan sections are baffled to prevent short cycling of air
- Slide out end panels
- Removable drain pan
- Mounts flush to the ceiling
- Top pan includes 1/2” wide slotted mounting points
- UL/cUL certified for use with multiple refrigerants
- NSF approved for use in food preparation areas

Certifications

Heat Transfer Products Group, LLC
A Division of Rheem Manufacturing
201Thomas French Drive
Scottsboro, Alabama 35769

Date: February 16, 2022

SUBJECT: **Wind Load Analysis of HTPG "3 TO 22 HP, Next-Gen II Series" Air Cooled Condensing Unit Models**

The following wind load analysis applies to all 3 TO 22 HP HTPG "Next-Gen II Series" Air Cooled Condensing Units using the following model nomenclature:

R	F	D	T	03	M	4S	E	A
1	2	3	4	5	6	7	8	9

The listing below are the positions for the new model with a brief explanation

1	**Branding**:	R Russell W Witt K Kramer C ColdZone ? other brands may use single letter code
2	**Condenser and Control Type**:	B No flooded condenser control (Indoor or Warm Climate Outdoor F Flooded Condenser Control (Outdoor)
3	**Compressor Type**:	C Carlyle B Bitzer D Discus S Semi-hermetic O Scroll
4	**Configuration**:	S D Series Single T D Series Dual
5	**Nominal Size**:	XX Two numbers roughly equal to compressor horsepower
6	**Temperature Range**:	L Low M Medium E Extended Medium
7	**Refrigerant Type**:	44 R404A 47 R407C 4A R407A 4S used when compressor acceptable for previous 3
8	**Voltage/Phase/Frequency Code:**	E -208-230/3/60 G- 460/3/60 V- 208/3/60 Q-575/3/60
9	**Revision Code**:	Starting with Letter A

The wind load analysis has determined both single and dual series NEW "Next-Gen II Series" air cooled condensing units are in accordancewith ASCE/SEI 7-16, Florida Building Code Seventh Edition (2020, Section 1620.2) for the following location and building height:

Installation location: Miami – Dade County, Florida **Installation Height**: 60 feet

Note: Using a roof curb to install these condensing units requires a metal mounting surface with stand details to be provided by the selected mechanical contractor at the job site.

Roof Mounting Requirements

Number of Attachment Points #	Hurricane Uplift Load Tension (lbs)	Hurricane Horizontal Load Shear (lbs)
1-corner	1000	670
2- corner	1000	670
3 - corner	1000	670
4- corner	1000	670
5- to building	1000	670
6- to building	1000	670

Moss & Associates LLC
2101 N. Andrews Avenue
Fort Lauderdale, Florida 33311
P: (954) 524-5678

Project: B372302 Fort Lauderdale Police Headquarters
1300 W Broward Blvd
Fort Lauderdale, Florida 33312

RFI #246: General Evidence Storage Room 1610 Walk-in Refrigerator & Walk-in Freezer Clarifications

Status	Open		
To	Robert Buscemi (City of Fort Lauderdale) Anthony Greg Fajardo (City of Fort Lauderdale) David Lovern (City of Fort Lauderdale) *(Response Required)*	**From**	Michael Perez-Gurri (Moss & Associates LLC - FLL) 2101 N Andrews Avenue Fort Lauderdale, Florida
Date Initiated	Nov 22, 2023	**Due Date**	Dec 19, 2023
Location	HQ LEVEL 1	**Project Stage**	
Cost Impact		**Schedule Impact**	
Spec Section	114000 - WALK-IN ENVIRONMENTAL CHAMBER AND FREEZER	**Cost Code**	
Drawing Number	HQ-A2-2-1B	**Reference**	
Linked Drawings			
Received From	Michael Perez-Gurri (Moss & Associates LLC - FLL)	**Sub Job**	
Copies To	Jennifer Escobar (Moss & Associates LLC - FLL), Matthew Kane (Moss & Associates LLC - FLL), Angel Lopez (Moss & Associates LLC - FLL), David Lovern (City of Fort Lauderdale), Vanessa Navarrete (Moss & Associates LLC - FLL), D'von Nottage (Moss & Associates LLC - FLL), Michael Perez-Gurri (Moss & Associates LLC - FLL)		
Subcontractor RFI #		**Priority**	Medium

Activity

Question

Question from Michael Perez-Gurri Moss & Associates LLC - FLL *on Wednesday, Nov 22, 2023 at 07:52 AM EST*

Please clarify the following regarding the General Evidence Storage Room 1610 Walk-in Refrigerator & Freezer Units. Refer to RFI backup attachments:

1) Architectural Floor Plan Level 1 Area B Sheet HQ-A2-2-1B, including Mechanical (HVAC) and Electrical Sheets, do not specify the Room Tag distinguishing which space is meant to be the Walk-in Refrigerator and the Walk-in Freezer. Refer to attached. Please clarify which space is the intended Walk-in Refrigerator and which space is the intended Walk-in Freezer. Once confirmed, please provide Room Tags for both spaces in a permit revision as to not potentially impact in-progress field work/inspections.

2) Architectural Floor Plan Level 1 Area B Sheet HQ-A2-2-1B Keynote 2-20168 via Detail 3E/HQ-A7-3-03 specifies to depress the slab 6" for the both the Walk-in Refrigerator Unit and the Walk-in Freezer Unit's installation, including both units cooler floor panels. Refer to attached. Please provide the specific product data/cut sheets for both the Walk-in Refrigerator Unit and the Walk-in Freezer Unit that will be furnished and installed for this project so the installation can be timely coordinated to avoid any potential rework.

3) Architectural Floor Plan Level 1 Area B Sheet HQ-A2-2-1B specifies Wall Assembly Type M01A0.1 to receive the installation of both the Walk-in Refrigerator Unit and the Walk-in Freezer Unit. Architectural Dimension Plan Level 1 Sheet HQA2-1-1B provides proposed layout dimensions for both the Walk-in Refrigerator Unit and the Walk-in Freezer Unit. Refer to attached. Please confirm what was the basis of design (manufacture make & model #) for both the Walk-in Refrigerator Unit and the Walk-in Freezer Unit that was used during design to specify the layout of Wall Assembly Type M01A0.1 at this location to accept the installation of both units and provide the applicable basis of design product data/cut sheets for review.

4) Architectural Floor Plan Level 1 Area B Sheet HQ-A2-2-1B Keynote 2-20168 via Detail 3E/HQ-A7-3-03 specifies to depress the slab 6" for the both the Walk-in Refrigerator Unit and the Walk-in Freezer Unit's installation, including for the installation for both units' cooler floor panels. Refer to attached. Please confirm the following:
a. Please confirm a 6" slab depression is sufficient for the future installation for both the Walk-in Refrigerator Unit and the Walk-in Freezer Unit.
b. Please provide a Structural Reinforcement Detail for the required slab depression for both the Walk-in Refrigerator Unit and the Walk-in Freezer Unit that will be furnished and installed for this project so the installation can be timely coordinated to avoid any potential rework.

5) Electrical Power Floor Plan Level 1 Area B Sheet HA-E2-2-1B specifics the power for the intended spaces for both he Walk-in Refrigerator Unit and the Walk-in Freezer Units to be fed from Panel L1B-1 on Sheet HQ-E5-1-12 from Circuits (CKT) 26, 28, 30, 32, 34, 36, 38 & 40. Refer to attached. However, Panel L1B-1 does not specifically identify which CKTs service the Walk-in Refrigerator and which CKTs service the Walk-in Freezer. Please clarify which CKTs service each respectful unit and provide a revised Panel L1B-1 specifying accordingly.

Attachments
23.11.22 - RFI-246 Backup - Evidence Refrigerator & Walk-in Freezer Clarifications.pdf

Official Response

Response from David Lovern City of Fort Lauderdale *on Wednesday, Apr 10, 2024 at 09:58 AM EDT*

Please proceed per the attached sketch.

Attachments
Refrig Plan layout .JPG

Official Response

Response from Yanique Virgo AECOM *on Monday, Dec 11, 2023 at 11:13 PM EST*

Please see the attached response

Attachments
2023.12.1_RFI 246-General_Evidence_Storage_Room_1610_Walk-in_Refrigerator_AECOM Response.pdf

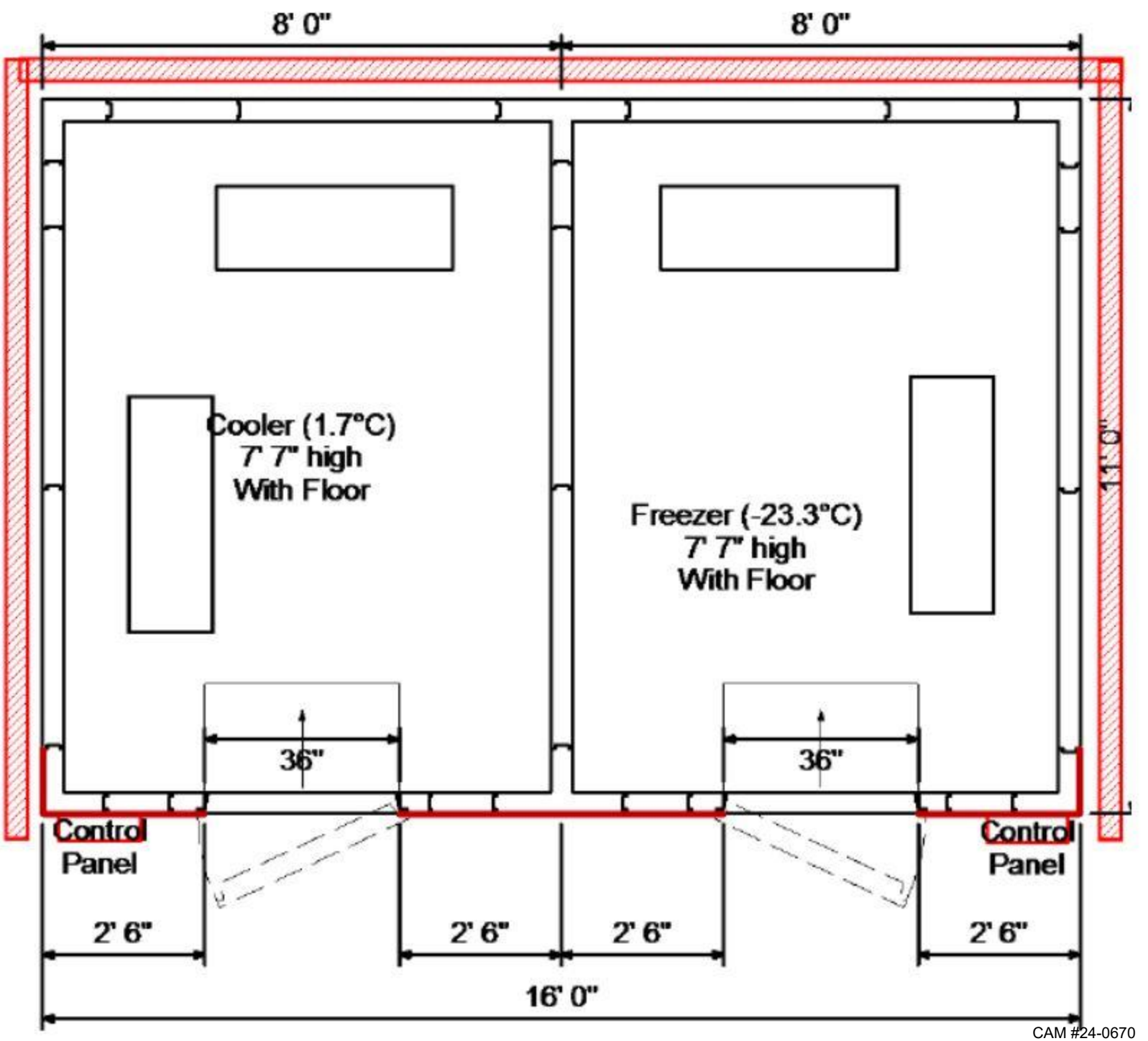
8' 0"
8' 0"
11' 0"
Cooler (1.7°C)
7' 7" high
With Floor
Freezer (-23.3°C)
7' 7" high
With Floor
36"
36"
Control
Panel
Control
Panel
2' 6"
2' 6"
2' 6"
2' 6"
16' 0"

Moss & Associates LLC
2101 N. Andrews Avenue
Fort Lauderdale, Florida 33311
P: (954) 524-5678

Project: B372302 Fort Lauderdale Police Headquarters
1300 W Broward Blvd
Fort Lauderdale, Florida 33312

RFI #246: General Evidence Storage Room 1610 Walk-in Refrigerator & Walk-in Freezer Clarifications

Status	Open		
To	Yanique Virgo (AECOM) *(Response Required)* Evan Siegel (AECOM)	**From**	Michael Perez-Gurri (Moss & Associates LLC - FLL) 2101 N Andrews Avenue Fort Lauderdale, Florida
Date Initiated	Nov 22, 2023	**Due Date**	Nov 29, 2023
Location	HQ LEVEL 1	**Project Stage**	
Cost Impact		**Schedule Impact**	
Spec Section	114000 - WALK-IN ENVIRONMENTAL CHAMBER AND FREEZER	**Cost Code**	
Drawing Number	HQ-A2-2-1B	**Reference**	
Linked Drawings			
Received From	Michael Perez-Gurri (Moss & Associates LLC - FLL)	**Sub Job**	
Copies To	Jennifer Escobar (Moss & Associates LLC - FLL), Matthew Kane (Moss & Associates LLC - FLL), Angel Lopez (Moss & Associates LLC - FLL), David Lovern (City of Fort Lauderdale), Vanessa Navarrete (Moss & Associates LLC - FLL), D'von Nottage (Moss & Associates LLC - FLL), Michael Perez-Gurri (Moss & Associates LLC - FLL)		
Subcontractor RFI #		**Priority**	Medium

The attached panel schedule should answer question 5. These are the designated poles for the Walk-in Freezer and Walk-in Refrigerator. The breaker and wire sizes can be adjusted to accommodate final approved/selected Walk-in Freezer and Walk-in Refrigerator
Spencer Hurrell

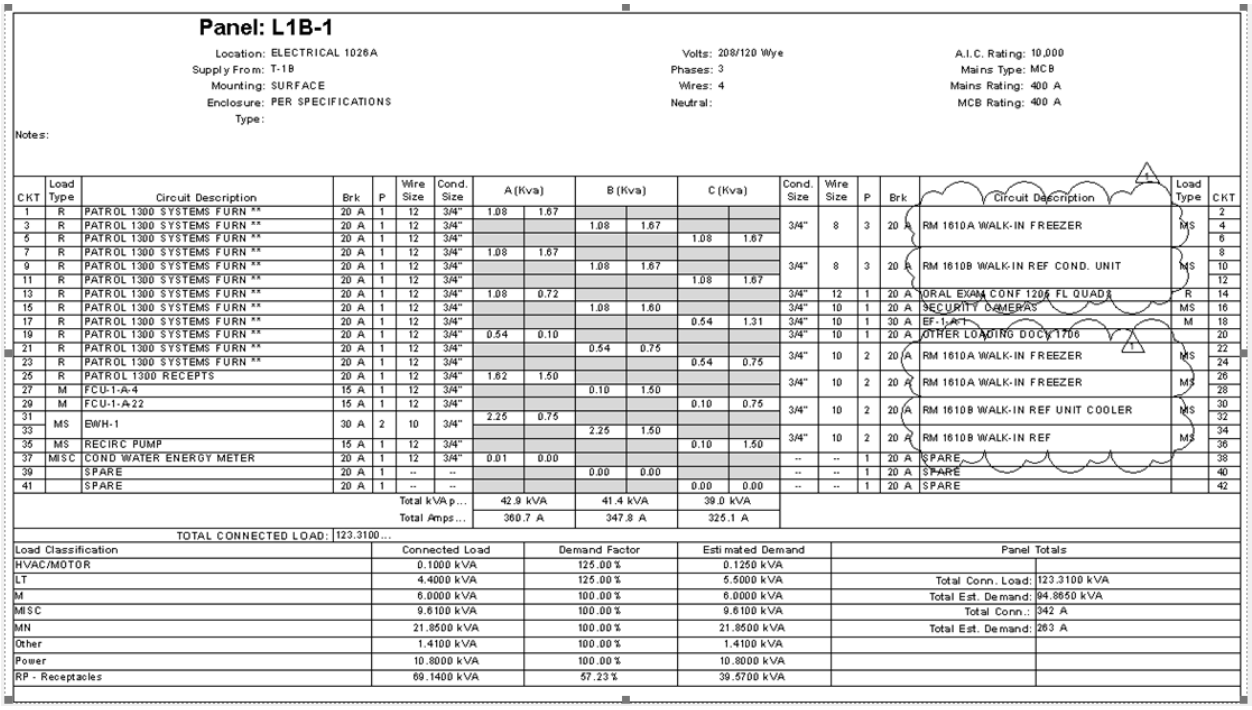

Panel: L1B-1

Location: ELECTRICAL 1026A
Supply From: T-1B
Mounting: SURFACE
Enclosure: PER SPECIFICATIONS
Type:

Volts: 208/120 Wye
Phases: 3
Wires: 4
Neutral:

A.I.C. Rating: 10,000
Mains Type: MCB
Mains Rating: 400 A
MCB Rating: 400 A

Notes:

CKT	Load Type	Circuit Description	Brk	P	Wire Size	Cond. Size	A (Kva)		B (Kva)		C (Kva)		Cond. Size	Wire Size	P	Brk	Circuit Description	Load Type	CKT
1	R	PATROL 1300 SYSTEMS FURN **	20 A	1	12	3/4"	1.08	1.67											
3	R	PATROL 1300 SYSTEMS FURN **	20 A	1	12	3/4"			1.08	1.67			3/4"	8	3	20 A	RM 1610A WALK-IN FREEZER	MS	4
5	R	PATROL 1300 SYSTEMS FURN **	20 A	1	12	3/4"					1.08	1.67							6
7	R	PATROL 1300 SYSTEMS FURN **	20 A	1	12	3/4"	1.08	1.67											8
9	R	PATROL 1300 SYSTEMS FURN **	20 A	1	12	3/4"			1.08	1.67			3/4"	8	3	20 A	RM 1610B WALK-IN REF COND. UNIT	MS	10
11	R	PATROL 1300 SYSTEMS FURN **	20 A	1	12	3/4"					1.08	1.67							12
13	R	PATROL 1300 SYSTEMS FURN **	20 A	1	12	3/4"	1.08	0.72					3/4"	12	1	20 A	ORAL EXAM CONF 1205 FL QUAD	R	14
15	R	PATROL 1300 SYSTEMS FURN **	20 A	1	12	3/4"			1.08	1.60			3/4"	10	1	20 A	SECURITY CAMERAS	MS	16
17	R	PATROL 1300 SYSTEMS FURN **	20 A	1	12	3/4"					0.54	1.31	3/4"	10	1	30 A	EF-1-A1	M	18
19	R	PATROL 1300 SYSTEMS FURN **	20 A	1	12	3/4"	0.54	0.10					3/4"	10	1	20 A	OTHER LOADING DOCK 1706		20
21	R	PATROL 1300 SYSTEMS FURN **	20 A	1	12	3/4"			0.54	0.75			3/4"	10	2	20 A	RM 1610A WALK-IN FREEZER	MS	22
23	R	PATROL 1300 SYSTEMS FURN **	20 A	1	12	3/4"					0.54	0.75							24
25	R	PATROL 1300 RECEPTS	20 A	1	12	3/4"	1.62	1.50					3/4"	10	2	20 A	RM 1610A WALK-IN FREEZER	MS	26
27	M	FCU-1-A-4	15 A	1	12	3/4"			0.10	1.50									28
29	M	FCU-1-A-22	15 A	1	12	3/4"					0.10	0.75	3/4"	10	2	20 A	RM 1610B WALK-IN REF UNIT COOLER	MS	30
31	MS	EWH-1	30 A	2	10	3/4"	2.25	0.75											32
33									2.25	1.50			3/4"	10	2	20 A	RM 1610B WALK-IN REF	MS	34
35	MS	RECIRC PUMP	15 A	1	12	3/4"					0.10	1.50							36
37	MISC	COND WATER ENERGY METER	20 A	1	12	3/4"	0.01	0.00					--	--	1	20 A	SPARE		38
39		SPARE	20 A	1	--	--			0.00	0.00			--	--	1	20 A	SPARE		40
41		SPARE	20 A	1	--	--					0.00	0.00	--	--	1	20 A	SPARE		42
					Total kVA p...		42.9 kVA		41.4 kVA		39.0 kVA								
					Total Amps...		360.7 A		347.8 A		325.1 A								

TOTAL CONNECTED LOAD: 123.3100...

Load Classification	Connected Load	Demand Factor	Estimated Demand	Panel Totals	
HVAC/MOTOR	0.1000 kVA	125.00 %	0.1250 kVA		
LT	4.4000 kVA	125.00 %	5.5000 kVA	Total Conn. Load:	123.3100 kVA
M	6.0000 kVA	100.00 %	6.0000 kVA	Total Est. Demand:	94.8650 kVA
MISC	9.6100 kVA	100.00 %	9.6100 kVA	Total Conn.:	342 A
MN	21.8500 kVA	100.00 %	21.8500 kVA	Total Est. Demand:	263 A
Other	1.4100 kVA	100.00 %	1.4100 kVA		
Power	10.8000 kVA	100.00 %	10.8000 kVA		
RP - Receptacles	69.1400 kVA	57.23 %	39.5700 kVA		

Activity

Question

Question from Michael Perez-Gurri Moss & Associates LLC - FLL *on Wednesday, Nov 22, 2023 at 07:52 AM EST*

Please clarify the following regarding the General Evidence Storage Room 1610 Walk-in Refrigerator & Freezer Units. Refer to RFI backup attachments:

1) Architectural Floor Plan Level 1 Area B Sheet HQ-A2-2-1B, including Mechanical (HVAC) and Electrical Sheets, do not specify the Room Tag distinguishing which space is meant to be the Walk-in Refrigerator and the Walk-in Freezer. Refer to attached. Please clarify which space is the intended Walk-in Refrigerator and which space is the intended Walk-in Freezer. Once confirmed, please provide Room Tags for both spaces in a permit revision as to not potentially impact in-progress field work/inspections.

2) Architectural Floor Plan Level 1 Area B Sheet HQ-A2-2-1B Keynote 2-20168 via Detail 3E/HQ-A7-3-03 specifies to depress the slab 6" for the both the Walk-in Refrigerator Unit and the Walk-in Freezer Unit's installation, including both units cooler floor panels. Refer to attached. Please provide the specific product data/cut sheets for both the Walk-in Refrigerator Unit and the Walk-in Freezer Unit that will be furnished and installed for this project so the installation can be timely coordinated to avoid any potential rework.

3) Architectural Floor Plan Level 1 Area B Sheet HQ-A2-2-1B specifies Wall Assembly Type M01A0.1 to receive the installation of both the Walk-in Refrigerator Unit and the Walk-in Freezer Unit. Architectural Dimension Plan Level 1 Sheet HQA2-1-1B provides proposed layout dimensions for both the Walk-in Refrigerator Unit and the Walk-in Freezer Unit. Refer to attached. Please confirm what was the basis of design (manufacture make & model #) for both the Walk-in Refrigerator Unit and the Walk-in Freezer Unit that was used during design to specify the layout of Wall Assembly Type M01A0.1 at this location to accept the installation of both units and provide the applicable basis of design product data/cut sheets for review.

4) Architectural Floor Plan Level 1 Area B Sheet HQ-A2-2-1B Keynote 2-20168 via Detail 3E/HQ-A7-3-03 specifies to depress the slab 6" for the both the Walk-in Refrigerator Unit and the Walk-in Freezer Unit's installation, including for the installation for both units' cooler floor panels. Refer to attached. Please confirm the following:
a. Please confirm a 6" slab depression is sufficient for the future installation for both the Walk-in Refrigerator Unit and the Walk-in Freezer Unit.
b. Please provide a Structural Reinforcement Detail for the required slab depression for both the Walk-in Refrigerator Unit and the Walk-in Freezer Unit that will be furnished and installed for this project so the installation can be timely coordinated to avoid any potential rework.

5) Electrical Power Floor Plan Level 1 Area B Sheet HA-E2-2-1B specifics the power for the intended spaces for both he Walk-in Refrigerator Unit and the Walk-in Freezer Units to be fed from Panel L1B-1 on Sheet HQ-E5-1-12 from Circuits (CKT) 26, 28, 30, 32, 34, 36, 38 & 40. Refer to attached. However, Panel L1B-1 does not specifically identify which CKTs service the Walk-in Refrigerator and which CKTs service the Walk-in Freezer. Please clarify which CKTs service each respectful unit and provide a revised Panel L1B-1 specifying accordingly.

Attachments
23.11.22 - RFI-246 Backup - Evidence Refrigerator & Walk-in Freezer Clarifications.pdf

Awaiting an Official Response

Jaideep Karnik response to the highlighted portions of questions 2 and 3 above:
The installation of the Walk-In Coolers scope is entirely a delegated design and therefore AE does not have any basis of design data/cutsheets. As per the requirements of the delegated design contractual scope, Contractor (or in this case the owner) will have to engage a local manufacturer/specialist for selection and size of the refrigeration and dehumidification equipment along with the size and layout of the refrigerant piping. Please see delegated design scope stated in specification 114000 paragraph 1.5.C. See temperature and humidity performance criteria in paragraphs 2.2.B and 2.3.B for the delegated selection of the refrigeration and dehumidification systems.

Evan Siegel responses:
1. See sketch below, the Walk-in Freezer shall be on the north side and the Walk-in Refrigerator shall be on the south side. Drawings to be updated
3. The client identified the square footage required and the location was identified in the plan, as noted above the design shall be by delegated design.
Note Wall Type M01A0.1 is incorrectly identified, these walls should be M01A0.
4. a. The delegated designer will need to confirm that the 6" depression is sufficient
b. See structural drawings, detail, 3/HQ-S6-1-02 for slab reinforcement and revised sketch below of slab depression location.

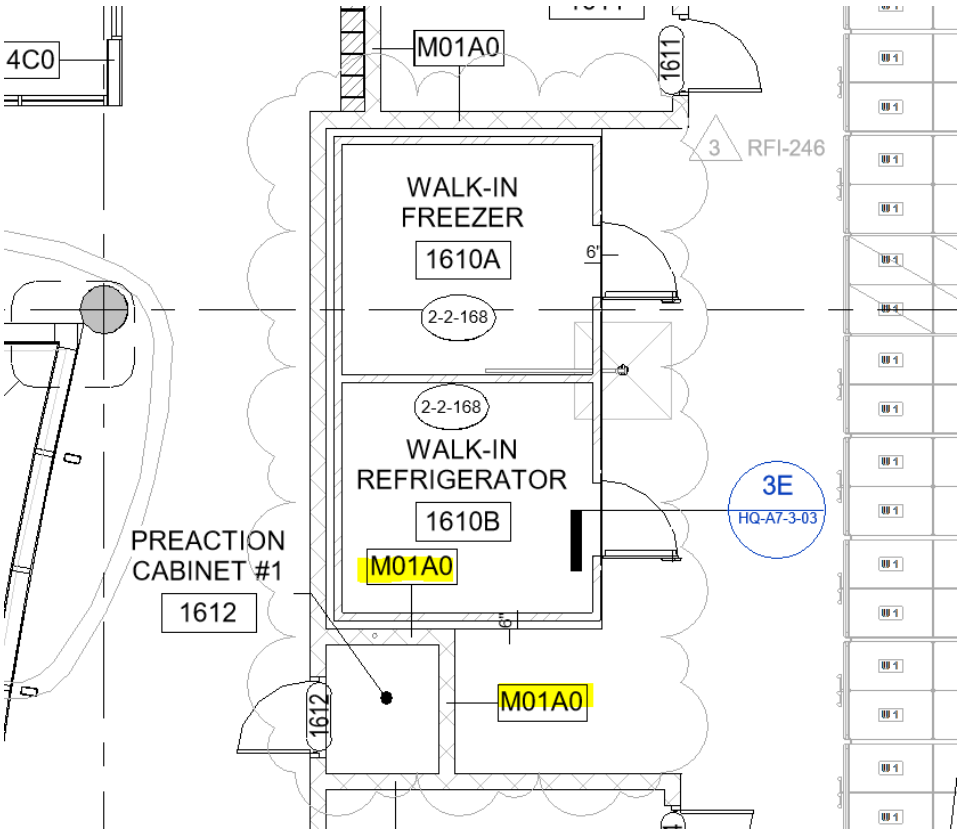

REFERENCE HQ-A2-2-1B

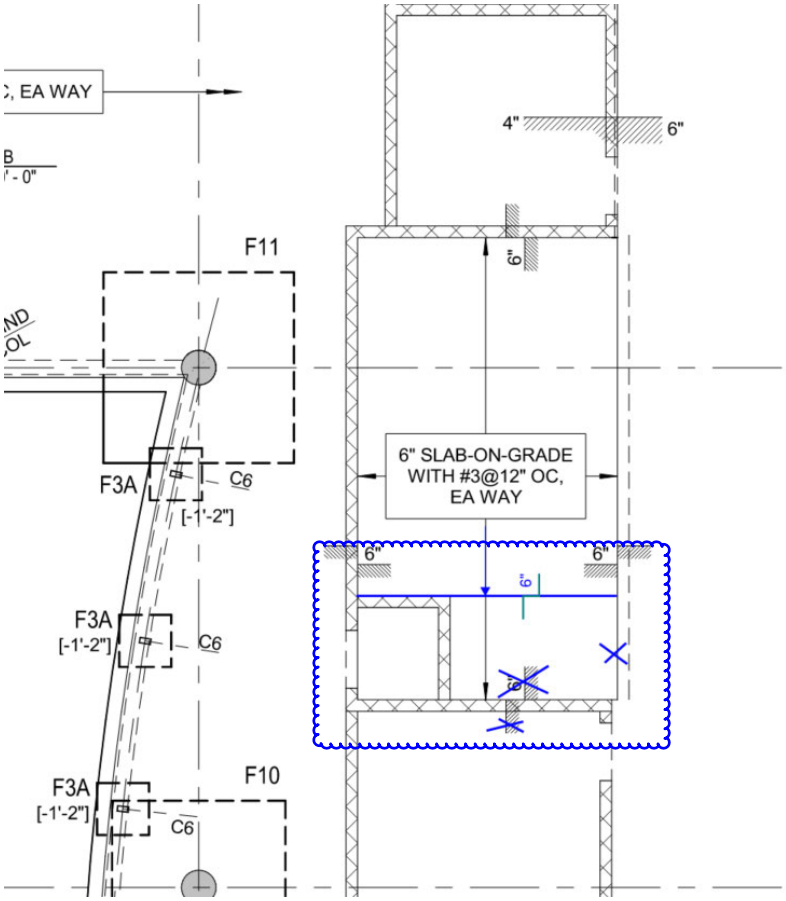

REFERENCE HQ-S2-2-1B

Moss & Associates, LLC
2101 N Andrews Avenue
Ft Lauderdale, FL 33311

June 21, 2024

David Lovern
City of Fort Lauderdale
100 N Andrews Ave
Ft. Lauderdale, FL 33301

RE: Potential Change Item (PCI) 0114 Notification
Fort Lauderdale Police Headquarters - B372302

Dear David Lovern,

This letter is to provide official notification of a potential change item (PCI) as follows:

PCI Number: 0114
Date: February 16, 2024
Description: PG Level 1 Walkin Freezer - Hyvac - Additional Scope.
Days Requested: TBD.
Reason: Owner Directive - External
Scope Description: Moss's GMP Assumptions & Clarifications Items G15, G32 & Miscellaneous Equipment Division 11 excludes Walkin Environmental Chambers & Freezers. Following the OAC Meeting of 02/06/24, per City's email request dated 02/16/24, Moss is to now provide pricing for the additional scope of work to provide the PG Level 1 Walkin Freezer. Final Submittal Package Submission Per Meeting Minutes of 06/21/24. Meeting Minutes enclosed. Final pricing pending submittal approval and inclusion of any additional costs associated with any applicable cost impact submittal review comments.

This PCI is comprised of the following items:

HVAC	$ 59,521.00
01 Construction Contingency 2%	$ 1,190.00
02 Subcontract Default Insurance 1.25%	$ 759.00
03 Moss Insurance 1.75%	$ 1,076.00
04 Bond 1%	$ 625.00
05 Fee 4%	$ 2,527.00
Grand Total	$65,698.00

Per the terms and conditions of our contract, we have attached the appropriate back up documentation to substantiate the above referenced costs. This request only includes the items specifically identified in this change proposal. All other costs associated with this project shall be submitted under a separate change order cover.

We respectfully reserve our rights to request additional time should it become evident that this work will impact the overall completion of the project. The costs associated with this PCI will remain valid for fourteen (14) calendar days after submission.

Please indicate your formal approval for this additional work and cost by signing in the space provided below. Moss & Associates will then incorporate this change into the next Owner Change Order (OCO).

If you should have any questions, please contact the undersigned at 954-326-2727 as soon as possible.

Sincerely, **Moss & Associates, LLC** _____ Date: June 21, 2024 **Michael Perez-Gurri** Project Manager I	Reviewed / Approved by: **City of Fort Lauderdale** **Approved:** _____ **Date:**_____ **(Owner)**

Michael Perez-Gurri

From:	Michael Perez-Gurri
Sent:	Monday, June 17, 2024 10:59 AM
To:	David Lovern; Robert Buscemi; Lieutenant Adam Solomon (ASolomon@fortlauderdale.gov); Kristeen Lentvorski
Cc:	D'von Nottage; Matthew Kane; Christopher Andrisani
Subject:	RE: Final pricing on Items

@David Lovern

1. They are **not**, and the final cost inclusive of Moss's overhead and profit adds cannot be finalized at this time. Final pricing pending submittal approval and inclusion of any additional costs associated with any applicable cost impact submittal review comments.

Regards,
Michael Perez-Gurri (MPG)
Assistant Project Manager / Certified General Contractor (CGC)
Fort Lauderdale Police Headquarters Project
Moss
Direct: 561.267.6324 | Office: 954.524.5678
mosscm.com

From: David Lovern <DLovern@fortlauderdale.gov>
Sent: Monday, June 17, 2024 9:54 AM
To: Michael Perez-Gurri <MPerezGurri@mosscm.com>; Robert Buscemi <RBuscemi@fortlauderdale.gov>; Lieutenant Adam Solomon (ASolomon@fortlauderdale.gov) <asolomon@fortlauderdale.gov>; Kristeen Lentvorski <kristeen@abetterplumbing.net>
Cc: D'von Nottage <DNottage@mosscm.com>; Matthew Kane <MKane@mosscm.com>; Christopher Andrisani <CAndrisani@mosscm.com>
Subject: RE: Final pricing on Items

CAUTION: This email originated from outside of Moss
Do not click links or open attachments unless you can confirm the sender and know the content is safe.
Be careful of any attachments or links that ask for your password.

Mike,

Are these costs inclusive of Moss's overhead and profit adds?

Please incorporate if not already done so. Thanks.

Respectfully,

David Lovern
Senior Project Manager
City of Fort Lauderdale
954.828.6235 Office
305.491.1436 Direct
dlovern@fortlauderdale.gov
#WeAreFTL

From: Michael Perez-Gurri <MPerezGurri@mosscm.com>
Sent: Friday, June 14, 2024 10:19 AM
To: David Lovern <DLovern@fortlauderdale.gov>; Robert Buscemi <RBuscemi@fortlauderdale.gov>; Lieutenant Adam Solomon (ASolomon@fortlauderdale.gov) <asolomon@fortlauderdale.gov>; Kristeen Lentvorski <kristeen@abetterplumbing.net>
Cc: D'von Nottage <DNottage@mosscm.com>; Matthew Kane <MKane@mosscm.com>; Christopher Andrisani <CAndrisani@mosscm.com>
Subject: [EXTERNAL:CAUTION!]- FW: Final pricing on Items

[::CAUTION!::] This email originated from *outside* The City of Fort Lauderdale.
Do Not Reply, click links, or open attachments from an unknown or suspicious origin. Confirm the email address is from an expected source before taking action.
Report any suspicious emails to spamadmin@fortlauderdale.gov

@David Lovern @rbuscemi@fortlauderdale.gov @Lieutenant Adam Solomon (ASolomon@fortlauderdale.gov) @Kristeen Lentvorski

See my comments in green below.

Regards,
Michael Perez-Gurri (MPG)
Assistant Project Manager / Certified General Contractor (CGC)
Fort Lauderdale Police Headquarters Project
Moss
Direct: 561.267.6324 | Office: 954.524.5678
mosscm.com

From: David Lovern <DLovern@fortlauderdale.gov>
Sent: Wednesday, June 5, 2024 8:57 AM
To: Christopher Andrisani <CAndrisani@mosscm.com>
Cc: D'von Nottage <DNottage@mosscm.com>
Subject: FW: Final pricing on Items

CAUTION: This email originated from outside of Moss
Do not click links or open attachments unless you can confirm the sender and know the content is safe.
Be careful of any attachments or links that ask for your password.

Chris,

Please provide final pricing for the below items when you are able. Thanks.

Respectfully,

David Lovern
Senior Project Manager
954.828.6235 Office
305.491.1436 Direct
City of Fort Lauderdale, Florida

From: Robert Buscemi <RBuscemi@fortlauderdale.gov>
Sent: Monday, June 3, 2024 8:31 PM
To: David Lovern <DLovern@fortlauderdale.gov>
Cc: Adam Solomon (FLPD) <ASolomon@flpd.gov>
Subject: Final pricing

David
Can we get from Moss the final pricing for the following items

1. **Fume hoods (2) at lab:** RFI-468 with the updated SOO per the City's confirmation to AECOAM was provided on 05/24/24. Revised pricing from H2I pending & forthcoming.
2. **Refrig/freezer combo unit at evidence storage:** Preliminary Trade Contractor Costs = **$131,010**. Submittal Package REV0 returned "*Revise & Resubmit*" Final pricing pending submittal approval and any additional costs associated with applicable cost impact submittal review comments.
3. **Freezer unit at garage**: Preliminary Trade Contractor Costs = **$59,521**. Submittal Package REV0 pending submission incorporating applicable review comments from HQ Fidge/Freezer Submittal Package to mitigate it from being returned "*Revise & Resubmit*". Final pricing pending submittal approval and any additional costs associated with applicable cost impact submittal review comments.
4. **Drying chambers.** RFI-419 regarding Drying Chamber Coordination was only requesting Drying Chamber Dimensions for coordination purposes. Drying Chamber are **By Owner,** and it has never been requested to date by the City for Moss to provide pricing for the Drying Chamber as a Change Order Request.

5. **Under counter refig units at break room areas:** (including total number needed): RFI-254 is about the one (1) under-counter refrigerator in the Laboratory requesting cut sheets for coordination purpose only at this one (1) under counter refrigerator which is **By Owner**. Regarding under-counter refrigerators at Break Room Areas, these under-counter refrigerators as well are **By Owner**, and it has never been requested to date by the City for Moss to provide pricing for the under-counter refrigerators as a Change Order Request.

Robert Buscemi R.A. LEED AP
Project Manager
City of Fort Lauderdale
rbuscemi@fortlauderdale.gov
770-286-5293

5. Comment in page label 13:
   - ~~Not in compliance with Chamber operating temperature. See Specification 2.2.B.3.~~
   - ~~Note that the Freezer is in PG and not in HQ.~~
   - Label as CDU-4-2 and UC-1-B-2.

Not Applicable.
Moss / MPG / 06/21/24
Meeting Minutes With
AECOM, Moss, Hyvac & Frigid Coolers.

Not Applicable.
Not Applicable.
Moss / MPG / 06/21/24
Meeting Minutes With
AECOM, Moss, Hyvac & Frigid Coolers.

Correct labeling on Condenser Product Data.
Moss / MPG / 06/21/24 Meeting Minutes With AECOM, Moss, Hyvac & Frigid Coolers.

6. Comment in page label 14:
   - Per Specification 114000 para 2.2.B.a and f - Include winter control, crankcase heater, and enclosed weatherproof housing. Provide all manufacturer required components such as dryers, expansion valve etc. in the refrigerant circuit. Show all components in the piping shop drawings.
   - Explain why there is a difference in the options for the two units in the submittal?

All required options to be included, as required. Frigid Cooler Quote for both HQ & PG submittal package to be included.
Moss / MPG / 06/21/24 Meeting Minutes With AECOM, Moss, Hyvac & Frigid Coolers.

7. Comment in page label 18:
   - Equipment tags not provided - CDU-4-1 and CDU-4-2
   - Pipe supports Not provided.
   - Show riser traps in the refrigerant pipes as per manufacturer's written instruction for the refrigerant piping run of 150 – 200 feet and an elevation of about 50 feet. See para 2.2.B.e.
   - Only one common refrigerant pipe is shown here. At a minimum there should be one suction and one liquid line for each compressor circuit. Please coordinate with manufacturer. Also show sizes of all refrigerant piping.

Shop Drawing Comments. Hyvac to provide fridge coolers shop drawings and overall linear footage to confirm refrigerant piping run for HQ. HQ condenser located on roof of 3-Story HQ and Walk-in Chamber & Freezer in HQ Located on Level 1 of 3. Linear footage not a concern at PG Walk-in Freezer Condenser is approximately 30'(LF) away from freezer location.

Moss / MPG / 06/21/24 Meeting Minutes With AECOM, Moss, Hyvac & Frigid Coolers.

8. Comment in page label 19:
   - Pipe supports Not provided.
   - Show riser traps in the refrigerant pipes as per manufacturer's written instruction for the refrigerant piping run of 150 – 200 feet and an elevation of about 50 feet. See para 2.2.B.e.
   - Only one common refrigerant pipe is shown here. At a minimum there should be one suction and one liquid line for each compressor circuit. Please coordinate with manufacturer. Also show sizes of all refrigerant piping.

Shop Drawing Comment: Only 1 pipe shown. Revise to include note that 2 pipes will be provide with required insulation.

Moss / MPG / 06/21/24 Meeting Minutes With AECOM, Moss, Hyvac & Frigid Coolers.

9. Comment in page label 20:
   - Pipe supports Not provided.
   - Show riser traps in the refrigerant pipes as per manufacturer's written instruction for the refrigerant piping run of 150 – 200 feet and an elevation of about 50 feet. See para 2.2.B.e.
   - Only one common refrigerant pipe is shown here. At a minimum there should be one suction and one liquid line for each compressor circuit. Please coordinate with manufacturer. Also show sizes of all refrigerant piping.

Hyvac Shop Drawing Comment:Revise Shop Drawings Accordingly.
Moss / MPG / 06/21/24 Meeting Minutes With AECOM, Moss, Hyvac & Frigid Coolers.

10. Comment in page label 21:
    - Pipe supports Not provided.
    - Show riser traps in the refrigerant pipes as per manufacturer's written instruction for the refrigerant piping run of 150 – 200 feet and an elevation of about 50 feet. See para 2.2.B.e.
    - Only one common refrigerant pipe is shown here. At a minimum there should be one suction and one liquid line for each compressor circuit. Please coordinate with manufacturer. Also show sizes of all refrigerant piping.

Hyvac Shop Drawing Comment:Revise Shop Drawings Accordingly.
Moss / MPG / 06/21/24 Meeting Minutes With AECOM, Moss, Hyvac & Frigid Coolers.

11. Comment in page label 22:
    - Pipe supports Not provided.
    - Show riser traps in the refrigerant pipes as per manufacturer's written instruction for the refrigerant piping run of 150 – 200 feet and an elevation of about 50 feet. See para 2.2.B.e.

Hyvac Shop Drawing Comment:Revise Shop Drawings Accordingly.
Moss / MPG / 06/21/24 Meeting Minutes With AECOM, Moss, Hyvac & Frigid Coolers.

- Only one common refrigerant pipe is shown here. At a minimum there should be one suction and one liquid line for each compressor circuit. Please coordinate with manufacturer. Also show sizes of all refrigerant piping.
- Equipment's tag not shown UC-1-B-1 and UC-1-B-2

Hyvac Shop Drawing Comment:Revise Shop Drawings Accordingly.
Moss / MPG / 06/21/24 Meeting Minutes With AECOM, Moss, Hyvac & Frigid Coolers.

12. Comment in page label 27: Pipe fitting need to be below as per specification.

3.2 PIPING APPLICATIONS FOR REFRIGERANT R-410A
A. Suction Lines NPS 1-1/2 and Smaller for Conventional Air-Conditioning Applications: Copper, Type ACR, annealed-temper tubing and wrought-copper fittings with brazed joints.
B. Hot-Gas and Liquid Lines:
Copper, Type ACR, annealed- or drawn-temper tubing and wrought-copper fittings with brazed or soldered joints.

Hyvac Submittal Comment:Call Out exact fitting size to be used on refrigerant run line product date & shop drawing as a note.
Moss / MPG / 06/21/24 Meeting Minutes With AECOM, Moss, Hyvac & Frigid Coolers.

Refer 3.2 in SECTION 232300 - REFRIGERANT PIPING

Architecture Review:

1. Page 3-5 of 154: Shop drawing depicts a raised floor and ream, however current field condition has a 6" recess in the slab, ramp not required. Please coordinate with contractor.
2. Pag 22 of 154: Note the dimensions of walk-in refrigerator/freezer width as submitted has changed from an overall width of 20' to 16' so the location of the piping connections points shown below are not accurate, contractor to coordinate location of connection to refrigerant piping.

1) HQ Depression Required. 6" Depression In Contract Drawings
To Be Reduced To 4-3/4" To Match Assembly Thickness Of
Combo Walk-in Chamber & Freezer.PG Depression Not Required.PG Freezer
May Be Installed on Slab-On-Grade.

2)Hyvac Shop Drawing Review Comment: Combo Walk-in Chamber & Freezer
Placeholder Dimensions on HQ Level 1 To Be Revised Per Revised
Outside-To-Outside Dimensions Per Frigid Cooler Cut Sheets / City of
Fort Lauderdale Sketch. Refer to RFI-246 City Response dated 04/10/24 at 9:58AM.

Moss / MPG / 06/21/24 Meeting Minutes With AECOM, Moss, Hyvac & Frigid Coolers.

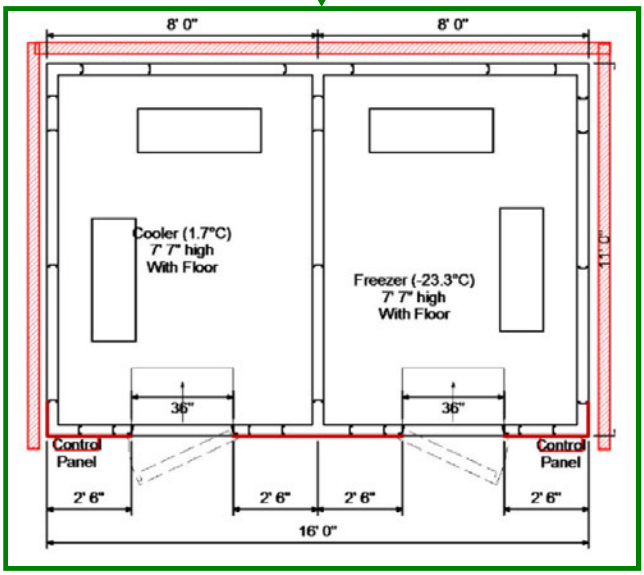

Hyvac
Exceeding Expectations
312 SOUTH MILITARY TRAIL
DEERFIELD BEACH, FL 33442
PHONE: (954) 427-3811
FAX: (954) 426-3762
E-MAIL: hyvac@hyvacinc.com

CHANGE PROPOSAL REQUEST

TO: Jen V. Escobar, LEED®AP BD+C
Moss
c (954) 305-2775 | f (954) 524-5677 | Email: jescobar@mosscm.com
mosscm.com

DATE 5/1/2024

PROJECT: FT. Lauderdale Police HQ

PROJ. # 1023003

CPR NO. 16

THE FOLLOWING IS A COST PROPOSAL AS A RESULT OF CHANGES AND MODIFICATIONS TO THE CONTRACT DOCUMENTS WHICH IMPACTS COSTS ON THE HVAC SYSTEM.

WE PROPOSE TO FURNISH ALL MATERIALS, LABOR, SERVICES AND SUPERVISION FOR THE EXECUTION OF THE MECHANICAL WORK COVERED BY THE CHANGES TO:

Costs associated with the added walking cooler units on the Hyvac scope on the PG. This proposal excluded: Any type of roofing, cutting, patching, painting electrical and plumbing work)

PROPOSAL LUMP SUM AMOUNT **$** **59,521**

COST BREAKDOWN IS AS FOLLOWS:

COST CODES	QTY.	DESCRIPTION	MAT. UNIT COSTS	LABOR UNITS	TOTAL MATERIAL COSTS	TOTAL LABOR COSTS	SUB CONTRACTORS COSTS
9 6092	1	Hyvac material take off date 2/26/2024 (See attached)	$ 6,246	122	$ 6,246	122	
2 5326	1	Walking cooler installation	$ 256	16	$ 256	16	
2 5326	1	Condenser Unit Installation	$ 485	8	$ 485	8	
2 5326	1	Frigid Cooler quote 24-0286MW (See attached)	$ 25,382	0	$ 25,382	-	
2 5326	1	NOA approved stand	$ 789	8	$ 789	8	
					$ 33,158	154	$ -

	EQUIPMENT & MATERIALS COSTS		$ 33,158
	SALES TAXES		$ 2,321
	EQUIPMENT & MATERIALS SUB-TOTAL		$ 35,479
	LABOR COSTS		$ 7,307
	LABOR BURDEN		$ 3,033
	PROJECT SUPERVISION		$ 1,375
	PROJECT MANAGEMENT		$ 708
	DESIGN & ENGINEERING		$ 293
	LABOR SUB-TOTAL		$ 12,715
	TOTAL SUBCONTRACTORS		$ -
	EXPENDABLE TOOLS		$ 313
	CLEAN UP		$ 723

	SAFETY			$ 254
	FREIGHT			$ 1,774
	QUALITY ASSURANCE			$ 578
	REPRODUCTIONS			$ 145
	MATERIAL HANDLING			$ 1,064
	WARRANTY			$ 1,064
	SUB-TOTAL AMOUNT			$ 54,110
	OVERHEAD COSTS %			$ 2,706
	PROFIT COSTS %			$ 2,706
	BOND COSTS % 0			$ -
	TOTAL PROPOSAL AMOUNT			$ 59,521

THIS PROPOSAL IS FIRM FOR ACCEPTANCE WITHIN 30 DAYS. WE CANNOT PROCEED WITH THE WORK COVERED BY THE PROPOSED CHANGE UNTIL WE ARE SO DIRECTED IN WRITING APPROVING COSTS, OR UNTIL WE RECEIVE YOUR WRITTEN CHANGE AUTHORIZATION, WHICH MUST BE WITHIN THE ABOVE TIME LIMIT TO PREVENT ADDITIONAL COSTS.

THIS PROPOSAL IS BASED SOLELY ON THE USUAL COSTS ELEMENTS SUCH AS LABOR AND MATERIALS, AND DOES NOT INCLUDE ANY AMOUNTS FOR ADDITIONAL CHANGES IN THE SEQUENCE OF WORK DELAYS, DISRUPTION, RESCHEDULING, EXTENDED OVERHEAD, OVERTIME, ACCELERATION AND/OR IMPACT COSTS, AND THE RIGHT IS EXPRESSLY RESERVED TO CLAIM FOR ANY AND ALL OF THESE AND RELATED ITEMS OF COST PRIOR TO ANY FINAL SETTLEMENT OF THIS CONTRACT.

ACCEPTED BY: _____ **HYVAC, INC.** **JR** _____

DATE: _____

Project: FLPG

Added WC unit PG

Category	Size	Item Desc	Qty	UOM	Mat Unit	Mat A	Mat Ext	Fld Ac	Fld Unit	Fld Ext
154# TYPE L COOPER	3/8"	TYPE L COOPER	84	'	3.425	1	287.7	1	0.055	4.62
154# TYPE L COOPER	5/8"	TYPE L COOPER	84	'	7.95	1	667.8	1	0.088	7.392
ARMAFLEX INSULATION	3/8"	TYPE ARX R6	84	'	1.625	1	136.5	1	0.088	7.392
ARMAFLEX INSULATION	5/8"	TYPE ARX R6	84	'	2.125	1	178.5	1	0.088	7.392
150# TYPE L COOPER	3/8"	90 ELBOW	6	ea	5.05	1	30.3	1	0.22	1.32
150# TYPE L COOPER	5/8"	90 ELBOW	6	ea	4.225	1	25.35	1	0.605	3.63
154# TYPE L COOPER	3/8"	COUPLING	4	'	7.95	1	31.8	1	0.088	0.352
150# TYPE L COOPER	5/8"	COUPLING	4	ea	5.675	1	22.7	1	0.605	2.42
150# TYPE L COOPER	3/8"	T585 SERVICE BALL VALVE	1	ea	23.25	1	23.25	1	0.33	0.33
150# TYPE L COOPER	5/8"	T585 SERVICE BALL VALVE	1	ea	38.2	1	38.2	1	0.495	0.495
10CU/FT ACETYLENE	8CU/FT	ACETYLENE EXCHANGE	2	ea	52.475	1	104.95	1	1.1	2.2
20CU/FT OXYGEN TANK	20CU/FT	OXYGEN TANK EXCHANGE	2	ea	61.125	1	122.25	1	1.1	2.2
20CU/FT NITROGEN TANK	20CU/FT	NITROGEN TANK EXCHANGE	2	ea	65.625	1	131.25	1	1.1	2.2
AEROCELL GLUE 1PT BLACK	N/A	AEROCELL GLUE 1PT BLACK W/BRUSH	4	ea	40.8	1	163.2	1	1.1	4.4
15% STAY-SILV .05X1/8"	N/A	15% STAY-SILV .05X1/8" 15620F1 FLAT	2	ea	370.575	1	741.15	1	1.1	2.2
TAPE 2" BLACK DUCT	N/A	TAPE 2" BLACK DUCT	2	ea	53.3	1	106.6	1	1.1	2.2
HANGERS & CLAMPS ETC	2''	#260 ADJ.CLEVIS HNG. GLV.	14	ea	2.85	1	39.9	1	0.55	7.7
HANGERS & CLAMPS ETC	3''	#260 ADJ.CLEVIS HNG. GLV.	14	ea	5.475	1	76.65	1	0.66	9.24
HANGERS & CLAMPS ETC	4''	#260 ADJ.CLEVIS HNG. GLV.	14	ea	6.675	1	93.45	1	0.77	10.78
HANGERS & CLAMPS ETC	3/8''	#146 ALL THREAD ROD	84	'	0.75	1	63	1	0.055	4.62
HANGERS & CLAMPS ETC	3/8''	#136 ROD COUPLING	84	ea	9.15	1	768.6	1	0.055	4.62
HANGER-R.CLAMP-ETC.	3/8''	FIG.165H-HEX NUTS	84	ea	0.075	1	6.3	1	0.055	4.62
HANGER-R.CLAMP-ETC.	3/8''	FIG.103-WASHER--FLAT--ROUND	84	ea	0.075	1	6.3	1	0.055	4.62
HANGER-R.CLAMP-ETC.	1/4''	FIG 514- DROP IN CONCRETE ANCHOR	84	ea	0.425	1	35.7	1	0.11	9.24
HANGER-R.CLAMP-ETC.	1A	INSULATION SHIELD	42	spec	44.575	1	1872.15	1	0.088	3.696
NUTS BOLTS & GASKETS	3/8''	FIG.1309 WEDGE ANCHOR	42	ea	1.125	1	47.25	1	0.187	7.854
CONDENSER UNIT STAND	N/A		1	ea	425	1	425	1	4	4
		TOTAL					***$ 6,245.80***			***122***

FRIGID COOLERS LLC
Walk-in Coolers, Freezers, Refrigeration,
Glass Doors and Restaurant Equipment
15751 Sheridan St. - Suite 115
Ft. Lauderdale, FL 33331

Quotation

Phone: 954-237-6753
Fax : 954-237-6302
sales@frigidcoolers.com

Quoted to:

Jose - A Rodriguez
jrodriguez@hyvacinc.com
Hyvac
312 South Military Trail
Deerfield Beach, FL Zip: 33442
Cell: 305-505-3151
954-427-3811

Ship to:

Free Shipping Applied - Please Note: Shipping Does Not Include Lift Gate Or Residential Area Delivery. Additional Charges Will Apply Unless Stated Otherwise In Quote.

Your One Source For All Your Cold Storage Solutions!

		Revision
Quote Number:	**24-0455MW**	**-0**
Quote Date:	04/29/2024	
Sales Rep:	Gus	
Job Name:	Walk In Freezer 10x11x8	

Item	Qty	Product Description
1	1	Indoor Walk-In Freezer Without Floor, Exact Dimensions 10'0" X 11'0" X 8'0" High with 4" Insulation (ASTM Test C-518 Flame spread and smoke development 15/250 ASTM Test E84), Stucco Embossed Acrylume 26 Gauge Exterior and Interior Metal Finish, Panel with Cam-Lock System. 2009 EISA Compliant, NSF (National Sanitary Foundation) Listed and Approved. **Walk-In Freezer(s) WITHOUT Floor (Concrete Floor have to be insulated)**
2	1	Reinforce Floor: 10'0" x 11'0" With 4" Insulation (ASTM Test C-518 Flame spread and smoke development 15/250 ASTM Test E84) with Heavy Gauge Aluminum Interior and Stucco Embossed Exterior Prefabricated Floor, NSF (National Sanitary Foundation) Listed and Approved.
3	1	Pressure Relief Vent Installed in Freezer (115 Volts)
4	1	**Freezer Door and Frame: 36" x 76" Flush Door Opening with Magnetic Door Gasket, Low Temperature with 4" Insulation (ASTM Test C-518 Flame spread and smoke development 15/250 ASTM Test E84), Perimeter Heater Wire, Stucco Embossed Acrylume Metal Finish.* *Included Door and Frame Accessories: (1) LED Vapor Proof Light (1) Digital Pilot Light Switch (1) Digital Thermometer (2) Self Closing Door Hinges (1) Entry Door Latch Handle with Key Lock (1) Inside Safety Release (1) Automatic Door Self Closer (1) 12" Diamond Kick Plate (Outside Only) (1) Perimeter Frame Heater Wire **(2) 12" Diamond Kick Plate (Inside - Outside Only) **(1) 13x13 View Window
5	1	**Inside Ramp 36" Wide X 30" Deep**

FRIGID COOLERS LLC
Walk-in Coolers, Freezers, Refrigeration,
Glass Doors and Restaurant Equipment
15751 Sheridan St. - Suite 115
Ft. Lauderdale, FL 33331

Quotation

Phone: 954-237-6753
Fax : 954-237-6302
sales@frigidcoolers.com

Quoted to:

Jose - A Rodriguez
jrodriguez@hyvacinc.com
Hyvac
312 South Military Trail
Deerfield Beach, FL Zip: 33442
Cell: 305-505-3151
954-427-3811

Ship to:

Free Shipping Applied - Please Note: Shipping Does Not Include Lift Gate Or Residential Area Delivery. Additional Charges Will Apply Unless Stated Otherwise In Quote.

Your One Source For All Your Cold Storage Solutions!

Quote Number:	**24-0455MW** Revision **-0**
Quote Date:	04/29/2024
Sales Rep:	Gus
Job Name:	Walk In Freezer 10x11x8

Item	Qty	Product Description
6	1	Witt - Russell Model: WFO400L4SEB Remote Preassembled Outdoor Refrigeration System, Low Temperature 4 HP SCROLL Copeland Compressor, Anti-Corrosion-Fins To Increase Coil Life Span, Seamless Inner Groove Copper Tubing For Increased Heat Exchange, Head Pressure Control To Stabilize The Freezing Of Liquid Line And Prevent Compressor Damage, Matched Fan Blades For Maximum Air Movement And Cooling, Adjustable Low Pressure Control Included, Industry Standard Parts For Easy Replacement, Easily Accessible Special Wiring Harness Connections That Won't Come Loose With Vibration, Control Box And Service Valves Located Outside For Easy Installation And Service, Preassembled Outdoor Cover To Protect Against Corrosion, Approved By U.L., Cul And ISO9001. 208-230/60/3 Voltage, MCA 31 MOPD 40 LIQUID 1/2" SUCTION 1 1/8" BTUs: 14,352 (When Holding At -10° F) 2009 EISA Compliant (R-404a Refrigerant) (1) Factory Mounted Sight Glass With Moisture Indicator (1) Factory Mounted Drier (1) Factory Mounted Encapsulated High And Low Pressure Controls (1) Thermostat (Loose) (1) Solenoid Valve And Coil (Loose) (1) Factory Mounted Crankcase Heater (1) Factory Mounted Electric Defrost Timer With Contactor
7	1	Witt - Russell Model: WL6E121DDAA Electric Defrost Low Profile Evaporator, Anti-Corrosion-Fins To Increase Coil Life Span, Corrugated Fins Increase Air Flow And Improve Heat Exchange, Parts Easily Accessible By Opening Front Cover, Protruding Fan And Motor Placement To Reduce Vibration Noise, Number Of **EC MOTORS Fans** (3) Per Evaporator (R-404a Refrigerant) 208-230/60/1 Voltage AMPS: 1.5 HEATER AMPS: 14.3 (1) Thermostatic Expansion Valve (Loose) Per Evaporator
8	1	**1 Year Compressor Warranty Included. No Labor**
9	1	**10 Year Panel Warranty Included.**
10	1	Free Shipping Applied. PLEASE NOTE: Shipping **DOES NOT** include **LIFT GATE** or residential area delivery. Additional charges will apply unless stated otherwise in the quote.

FRIGID COOLERS LLC

Walk-in Coolers, Freezers, Refrigeration,
Glass Doors and Restaurant Equipment
15751 Sheridan St. - Suite 115
Ft. Lauderdale, FL 33331

Quotation

Phone: 954-237-6753
Fax : 954-237-6302
sales@frigidcoolers.com

Quoted to:

Jose - A Rodriguez
jrodriguez@hyvacinc.com
Hyvac
312 South Military Trail
Deerfield Beach, FL Zip: 33442
Cell: 305-505-3151
954-427-3811

Ship to:

Free Shipping Applied - Please Note: Shipping Does Not Include Lift Gate Or Residential Area Delivery. Additional Charges Will Apply Unless Stated Otherwise In Quote.

Your One Source For All Your Cold Storage Solutions!

		Revision
Quote Number:	**24-0455MW**	**-0**
Quote Date:	04/29/2024	
Sales Rep:	Gus	
Job Name:	Walk In Freezer 10x11x8	

Item	Qty	Product Description

Once Shipped You Must Ensured That There Are No Damages Or Shortages. If There Are Any Damages Or Shortages, Note It On The Shipping Receipt And Contact Us Immediately. Failure To Note Damages Or Shortages On Shipping Receipt Will Result In Denial Of Claim By Trucking Company.

Notes: All Brand New Equipment Quoted. We DO NOT Quote or Sell Used or Refurbished Equipment. Free Shipping Applied - PLEASE NOTE: Shipping does NOT include lift gate or residential area delivery. Additional charges will apply unless stated otherwise in quote.

Sub Total	**$25,382.00**
Shipping	**$0.00**
Tax	**$0.00**
Grand Total	**$25,382.00**

General Terms and Conditions of Sale:
Quotations: All quotations are valid for 30 days unless otherwise noted. All efforts are made to ensure accuracy of quotations, but descriptions are not guaranteed. We reserved the right to modify typographical errors. Orders: All orders resulting from a written Frigid Coolers LLC quotation are subject to acceptance by Frigid Coolers LLC. No production work will start until the sales agreement(s) and the approval drawing(s) have been filled in, accordingly signed, dated and returned to Frigid Coolers LLC. For complete terms and conditions go to: www.FrigidCoolers.com/terms

SYS-1 - System Design Summary

General Requirements

Room Temperature: **-10 °F**	Ambient Temperature: **95 °F**	Design Run-time: **18 Hrs**	Required Capacity: **11446 BTUH**
Design TD: **10 °F**	Refrigerant: **R-404A**	Altitude: **1000 FT**	

Selected Equipment

Line Item	Quantity	Type	Tag	Description
1.0	1	System	SYS-1	R-404A - Refrigeration Equipment Match 1
1.1	1	Condensing Unit	CDU-1	WFO400L4SEB
1.2	1	Unit Cooler	UC-1	WL6E121DDA

System Balance

Balanced Capacity: **13,690.3** BTUH	Evap. T.D.: **11.7** °F	Line Loss: **5** °F	Suction Temp: **-26.7** °F	Calc. Run-Time: **15** Hrs

Quotes are valid for 30 Days. Due to ongoing product development, RapidSpec and its export documentation is subject to change without notice. In no event shall HTPG be liable for special or consequential damages in connection with the use or output of RapidSpec.

SYS-1 - CDU-1 - Product Information

General Data

Model Line: **NEXT-GEN MINI-CON**	Model Number: **WFO400L4SEB**	Flooded: **Yes**
Refrigerant: **R-404A**	Voltage: **208-230/3/60**	Compressor Type: **SCROLL**

Performance Data

Ambient Temp: **95** °F	Suction Temp: **-25** °F	Capacity: **12,640** BTUH

Electrical Data

Compressor RLA: **11.9**	Compressor LRA: **99**	Total Condenser Fan FLA: **3.1**
MCA: **31**	MOPD: **40**	

Physical Data

Number of Compressors: **1**	Compressor Model: **ZF13K4E**	Compressor HP: **4**
Number of Condenser Fans: **1**	Approx. Ship Weight: **352** lbs	Sound Data: **73** dBA
Liquid Line: **1/2** in.	Suction Line: **1 1/8** in.	
Pump Down Capacity (%): **90**	Pump Down Capacity: **28** lbs	

Option Data

Mounted Option	ADD/MODIFY DEFROST KIT: ED5
Mounted Option	LIQUID LINE WITH COMPONENTS: SEALED FILTER & SIGHT GLASS
Mounted Option	STANDARD RECEIVER
Mounted Option	FIXED HIGH/ADJUSTABLE LOW PRESSURE CONTROL

Compliance Data

AWEF: **3.15**

Notes

Quotes are valid for 30 Days. Due to ongoing product development, RapidSpec and its export documentation is subject to change without notice. In no event shall HTPG be liable for special or consequential damages in connection with the use or output of RapidSpec. MCA/MOPD and Defrost Kit selection will be confirmed at time of purchase. Submittal data shown represents design conditions.

Dimensional Drawing

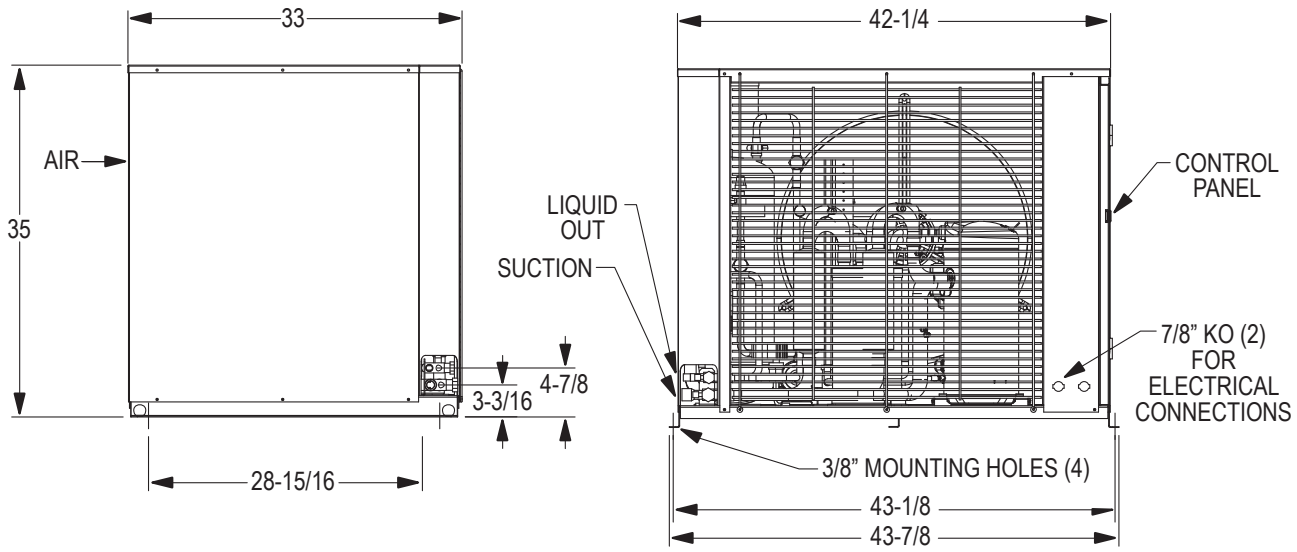

Standard Features

- All-weather Galvanized steel painted housing
- Generously sized high efficiency condenser, enhanced copper tubes/aluminum fins
- Integral Liquid Subcooling Circuit provides subcooled liquid to the expansion device
- Crankcase heater
- Large electrical panel with hinged/removable door
- Color coded point-to-point wiring
- Quick access to shut off valves from exterior
- UL/cUL certified for use with multiple refrigerants
- UL/cUL listed for outdoor use
- Flooded models include flooded head pressure control
- Non flooded models include mild ambient fan cycle control

Certifications

SYS-1 - UC-1 - Product Information

General Data

Model Line: **NEXT-GEN ALL-TEMP**	Model Number: **WL6E121DDA**	Motors: **DUAL SPEED EC MOTOR**
Unit Voltage: **208-230/1/60**	Defrost Type: **ELECTRIC DEFROST**	Refrigerant: **R-404A**
Fins Per Inch: **6**	Number of Fans: **3**	

Performance Data

Suction Temp: **-20** °F	T.D: **11.7** °F	Capacity: **14,102.1** BTUH	CFM: **2355**

Electrical Data

Motor Voltage: **208-230/1/60**	Total Unit Fan Motor Amps: **1.5**	
Heater Voltage: **208-230/1/60**	Heater Amps: **14.3**	Heater Watts: **3300**
MCA: **15**	MOPD: **20**	

Physical Data

Liquid Line: **3/8** in.	Suction Line: **1-1/8** in.	Approx. Ship Weight: **78** lbs

Option Data

Mounted Option	Fixed Defrost Control / Fan Delay Switch

Compliance Data

AWEF: **4.15**

Notes

Quotes are valid for 30 Days. Due to ongoing product development, RapidSpec and its export documentation is subject to change without notice. In no event shall HTPG be liable for special or consequential damages in connection with the use or output of RapidSpec. Submittal data shown represents design conditions.

Dimensional Drawing

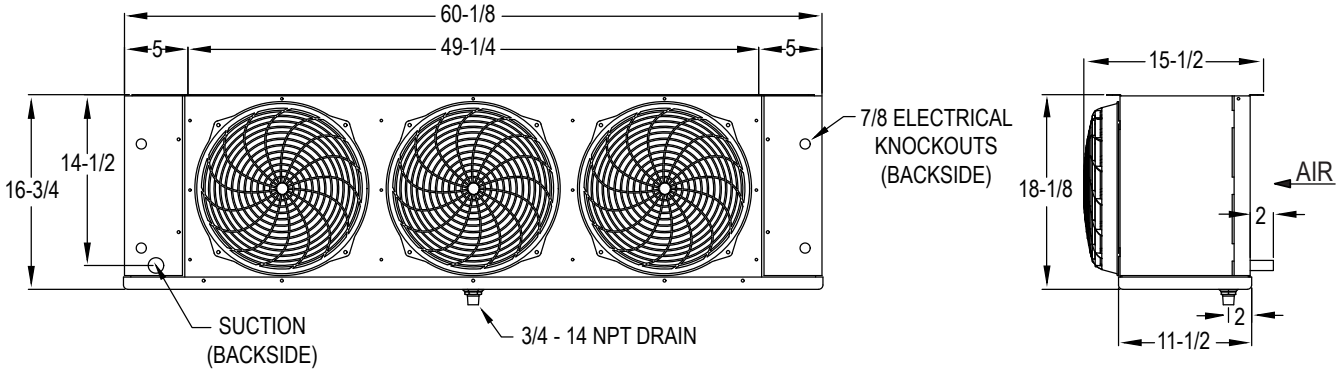

Standard Features

- Embossed aluminum housing
- Enhanced copper tube and aluminum fin coil construction
- Sweat connections
- Thermal overload protection
- High efficiency fan guard design and deep draw venturi
- Heavy-duty fans are balanced for vibration-free operation
- Fan sections are baffled to prevent short cycling of air
- Slide out end panels
- Removable drain pan
- Mounts flush to the ceiling
- Top pan includes 1/2” wide slotted mounting points
- UL/cUL certified for use with multiple refrigerants
- NSF approved for use in food preparation areas

Certifications

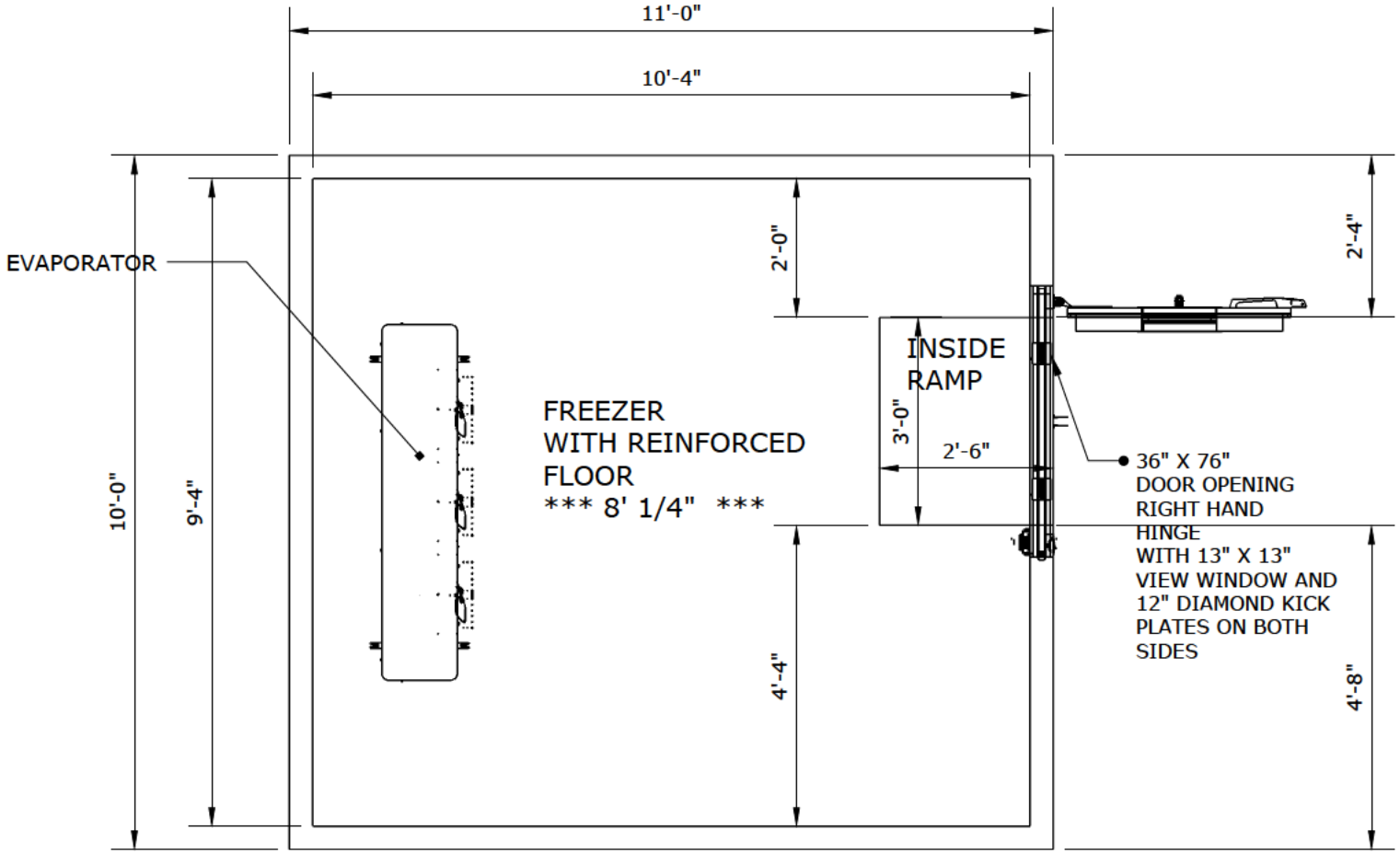

Job Number:	Scale:	Description:	DATE APPROVED:	SIGNED BY:
24-0455MW	Not To Scale	FREEZER WITH REINFORCED FLOOR *** 8' 1/4" ***		

FRIGID COOLERS
www.FrigidCoolers.com
954.237.6753

15751 Sheridan Street - Suite 115
Ft. Lauderdale, FL 33331
Phone: 954-237-6753
Fax: 954-237-6302
Email: sales@frigidcoolers.com

This is your approval drawing. Fabrication will not begin until Frigid Coolers receives the drawing, SIGNED and DATED as Approved.

This drawing is property of Frigid Coolers LLC.
Copyright is reserved by Frigid Coolers LLC and the drawing is issued on the condition that is NOT copied, reproduced, retained or disclosed to any unauthorized person, either wholly or in part without consent in writing from Frigid Coolers LLC.

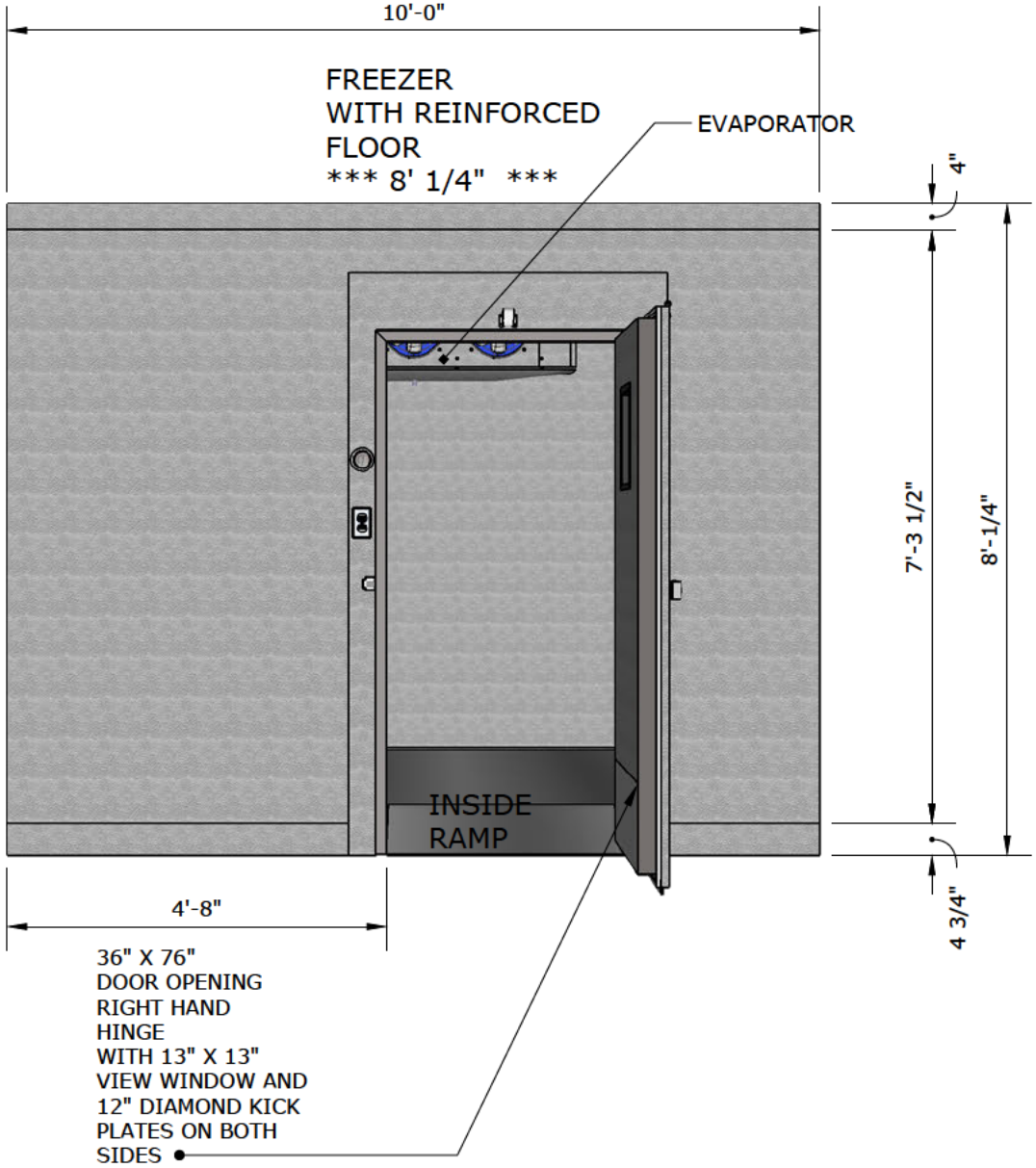

Job Number:	Scale:	Description:	DATE APPROVED:	SIGNED BY:
24-0455MW	Not To Scale	FREEZER WITH REINFORCED FLOOR *** 8' 1/4" ***		

FRIGID COOLERS
www.FrigidCoolers.com
954.237.6753

15751 Sheridan Street - Suite 115
Ft. Lauderdale, FL 33331
Phone: 954-237-6753
Fax: 954-237-6302
Email: sales@frigidcoolers.com

This is your approval drawing. Fabrication will not begin until Frigid Coolers receives the drawing, SIGNED and DATED as Approved.

This drawing is property of Frigid Coolers LLC.
Copyright is reserved by Frigid Coolers LLC and the drawing is issued on the condition that is NOT copied, reproduced, retained or disclosed to any unauthorized person, either wholly or in part without consent in writing from Frigid Coolers LLC.

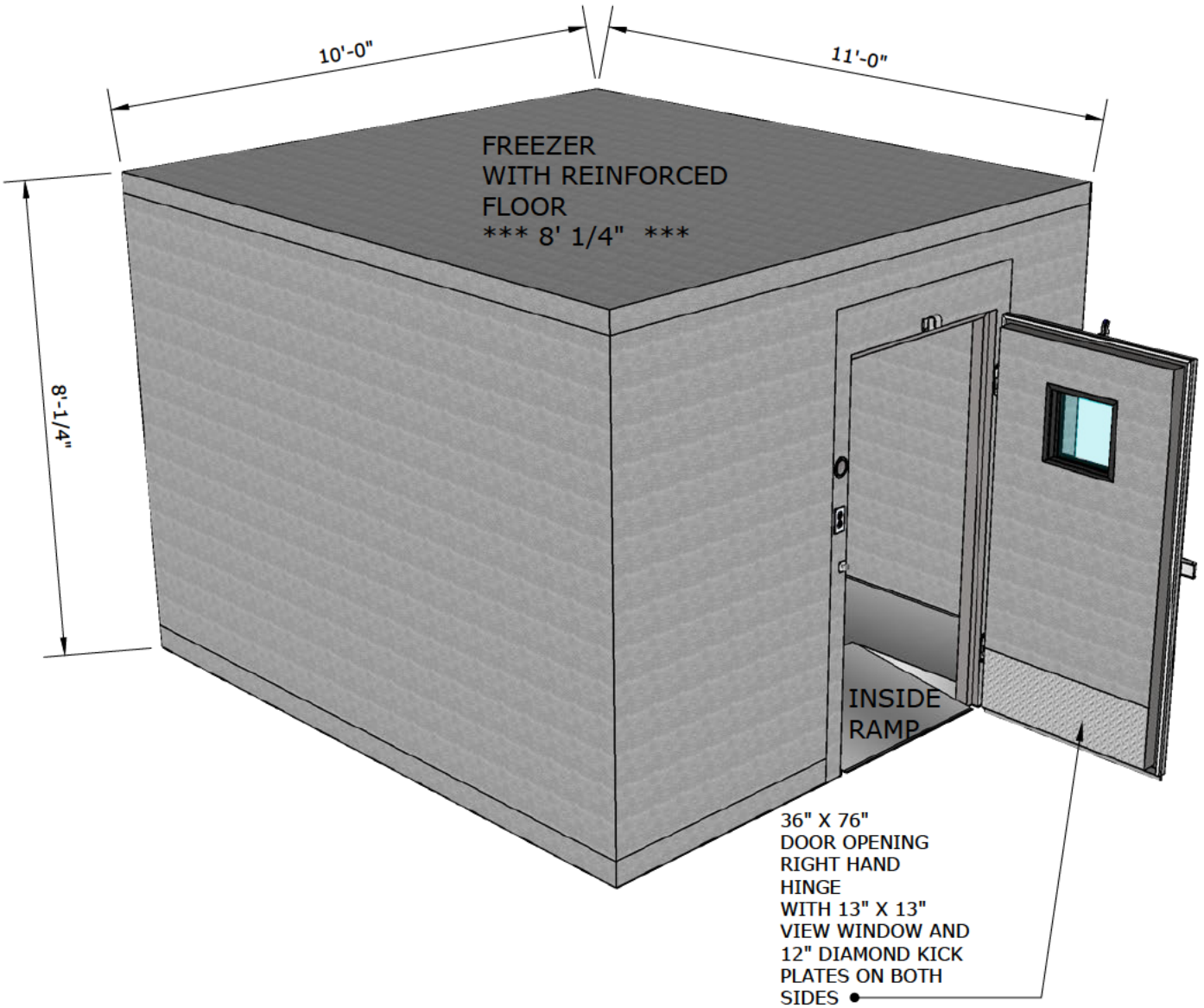

Job Number:	Scale:	Description:	DATE APPROVED:	SIGNED BY:
24-0455MW	Not To Scale	FREEZER WITH REINFORCED FLOOR *** 8' 1/4" ***		

FRIGID COOLERS
www.FrigidCoolers.com
954.237.6753

15751 Sheridan Street - Suite 115
Ft. Lauderdale, FL 33331
Phone: 954-237-6753
Fax: 954-237-6302
Email: sales@frigidcoolers.com

This is your approval drawing. Fabrication will not begin until Frigid Coolers receives the drawing, SIGNED and DATED as Approved.

This drawing is property of Frigid Coolers LLC.
Copyright is reserved by Frigid Coolers LLC and the drawing is issued on the condition that is NOT copied, reproduced, retained or disclosed to any unauthorized person, either wholly or in part without consent in writing from Frigid Coolers LLC.

Heat Transfer Products Group, LLC
A Division of Rheem Manufacturing
201Thomas French Drive
Scottsboro, Alabama 35769

Date: February 16, 2022

SUBJECT: **Wind Load Analysis of HTPG "3 TO 22 HP, Next-Gen II Series" Air Cooled Condensing Unit Models**

The following wind load analysis applies to all 3 TO 22 HP HTPG "Next-Gen II Series" Air Cooled Condensing Units using the following model nomenclature:

R	F	D	T	03	M	4S	E	A
1	2	3	4	5	6	7	8	9

The listing below are the positions for the new model with a brief explanation

1	**Branding**:	R Russell W Witt K Kramer C ColdZone ? other brands may use single letter code
2	**Condenser and Control Type**:	B No flooded condenser control (Indoor or Warm Climate Outdoor F Flooded Condenser Control (Outdoor)
3	**Compressor Type**:	C Carlyle B Bitzer D Discus S Semi-hermetic O Scroll
4	**Configuration**:	S D Series Single T D Series Dual
5	**Nominal Size**:	XX Two numbers roughly equal to compressor horsepower
6	**Temperature Range**:	L Low M Medium E Extended Medium
7	**Refrigerant Type**:	44 R404A 47 R407C 4A R407A 4S used when compressor acceptable for previous 3
8	**Voltage/Phase/Frequency Code:**	E -208-230/3/60 G- 460/3/60 V- 208/3/60 Q-575/3/60
9	**Revision Code**:	Starting with Letter A

The wind load analysis has determined both single and dual series NEW "Next-Gen II Series" air cooled condensing units are in accordancewith ASCE/SEI 7-16, Florida Building Code Seventh Edition (2020, Section 1620.2) for the following location and building height:

Installation location: Miami – Dade County, Florida **Installation Height**: 60 feet

Note: Using a roof curb to install these condensing units requires a metal mounting surface with stand details to be provided by the selected mechanical contractor at the job site.

Roof Mounting Requirements

Number of Attachment Points #	Hurricane Uplift Load Tension (lbs)	Hurricane Horizontal Load Shear (lbs)
1-corner	1000	670
2- corner	1000	670
3 - corner	1000	670
4- corner	1000	670
5- to building	1000	670
6- to building	1000	670

GENERAL SPECIFICATIONS

➤ FINISH:

Walls and ceilings: Standard 26 Gauge Stucco Embossed Galvalume Finish with a weather Protective aluminum and zinc alloy
Other options include Stainless Steel and white finished stucco.

➤ FLOORS:

Heavy gauge smooth aluminum and optional stainless steel.

➤ INSULATION:

4" TRP for walk-in coolers and freezers with exceeds new federal requirements.

COOLERS:

4" Thermal Resistant Panel*
R-Value .292 / ASTM Test C-518
Flame spread and smoke development 5/190 ASTM Test E84

FREEZER:

4" Thermal Resistant Panel*
R-Value .34 / ASTM Test C-518
Flame spread and smoke development 15/250 ASTM Test E84

➤ JOINT:

Panels have factory installed, NSF approved gasket, which insures a proper seal and better appearance. Standard gaskets are 1/8" closed cell neoprene.

➤ DOORS:

Standard door size is 34" X 76". Includes: Self closing hinges, automatic door closer, keyed entry latch with interior safety release, vapor proof light fixture, pilot light switch and dial thermometer. Freezer doors include anti condensate heater wire and pressure relief vent.

➤ CONSTRUCTION:

Panel facing shall be laminated to rigid insulation with urethane based adhesive under pressure to insure a strong and permanent bond. Panels are of 100% insulation (non wood construction) and all panel edges are tongue and groove. Panel connectors are factory installed rotary cam type speed locks. Floor panels are designed to sustain a load of 500 lbs. per square foot. Where floor panels are not required, 1" x 1" aluminum angle or NSF plastic screed will be furnished to insure a proper seal.

➤ INSTALLATION:

To help reduce installation time, all panels are marked to correspond with the installation drawing supplied by the factory. Also provided, one allen wrench along with miscellaneous installation materials.

* Patent Pending

PANEL CONSTRUCTION

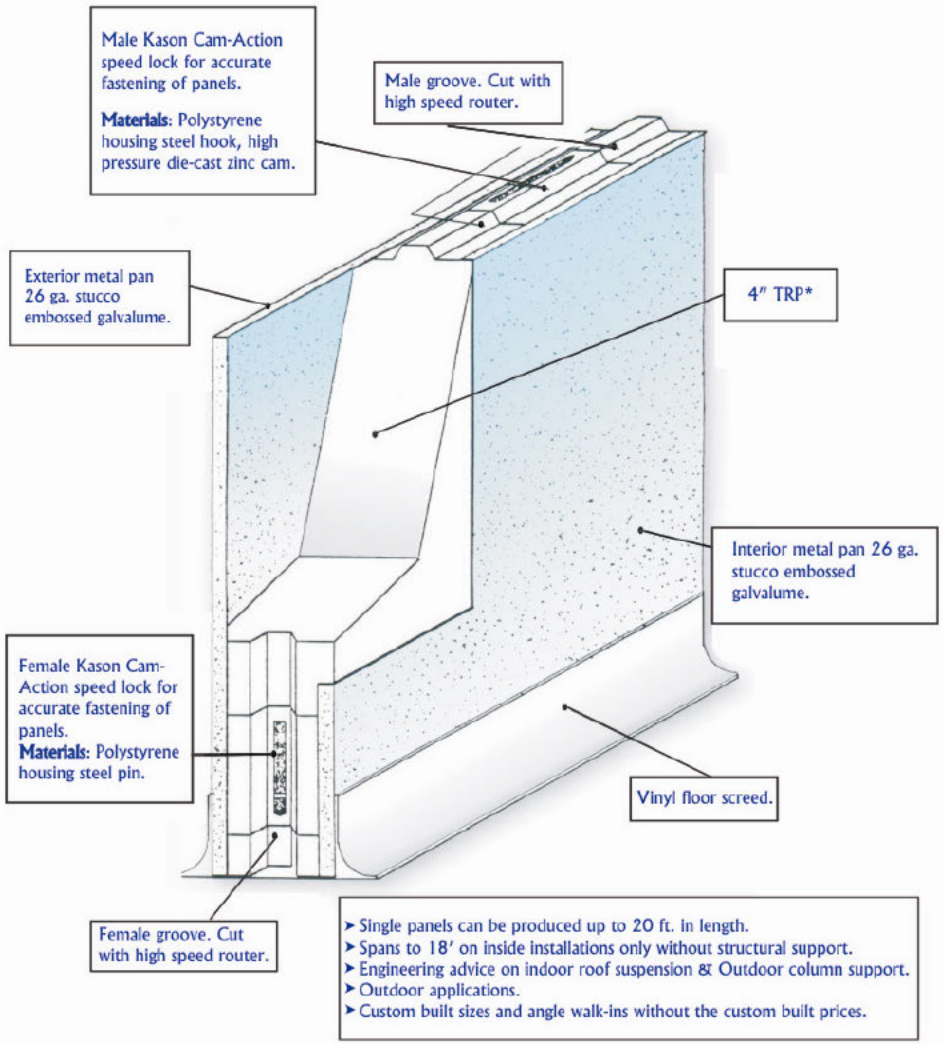

* Patent Pending

Jose Rodriguez

From: Michael Perez-Gurri <mperezgurri@mosscm.com>
Sent: Wednesday, May 1, 2024 4:12 PM
To: Jose Rodriguez
Cc: Larry Hall; Jefte Mercily; Pedro; Fort Lauderdale Police Headquarters Team
Subject: RE: Fort Lauderdale Police Headquarters: RFI #475 has been closed

@Jose Rodriguez

Confirm if the condenser can be installed next to the other condenser, Condenser CU-1-4. See screenshot photos below:

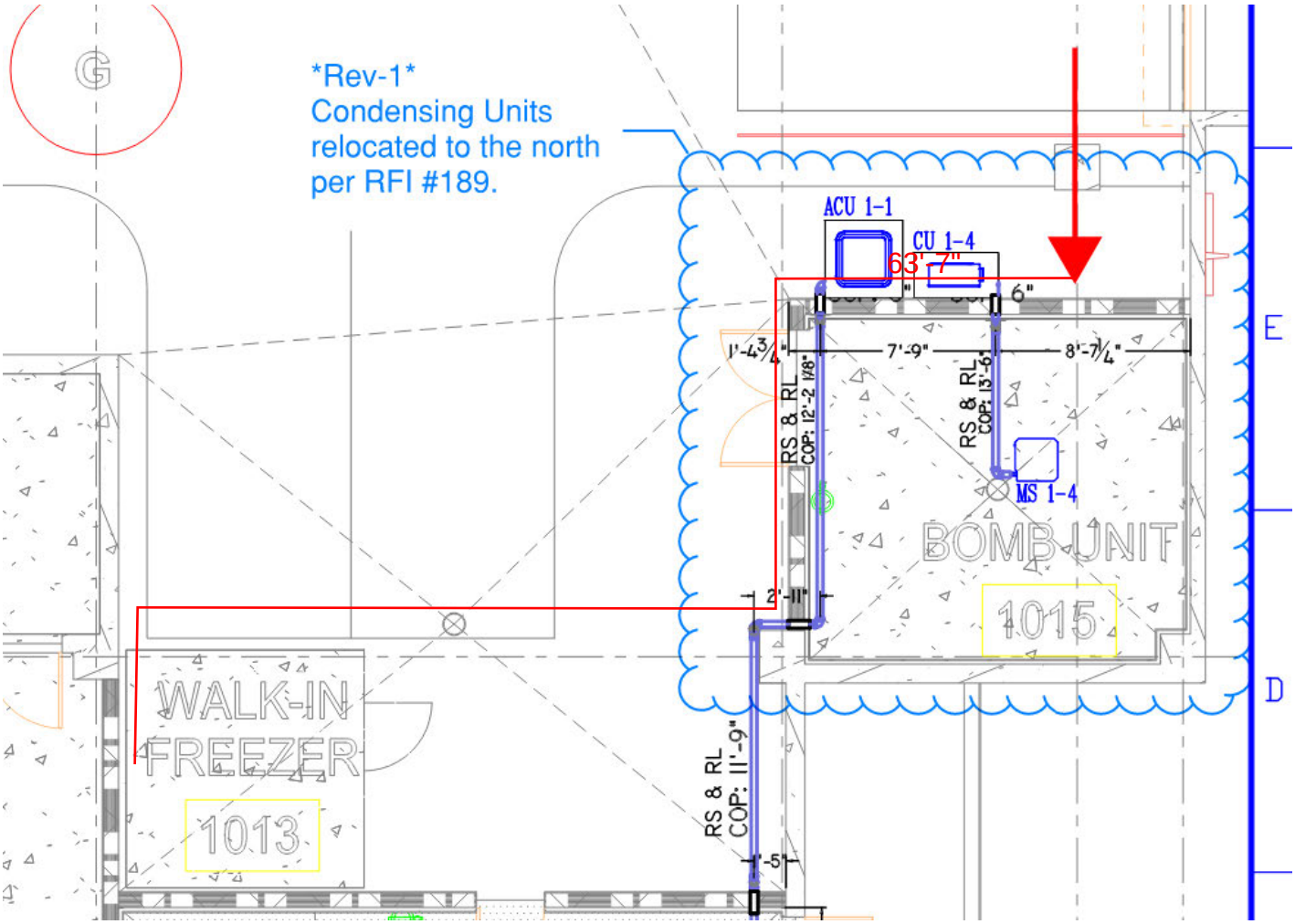

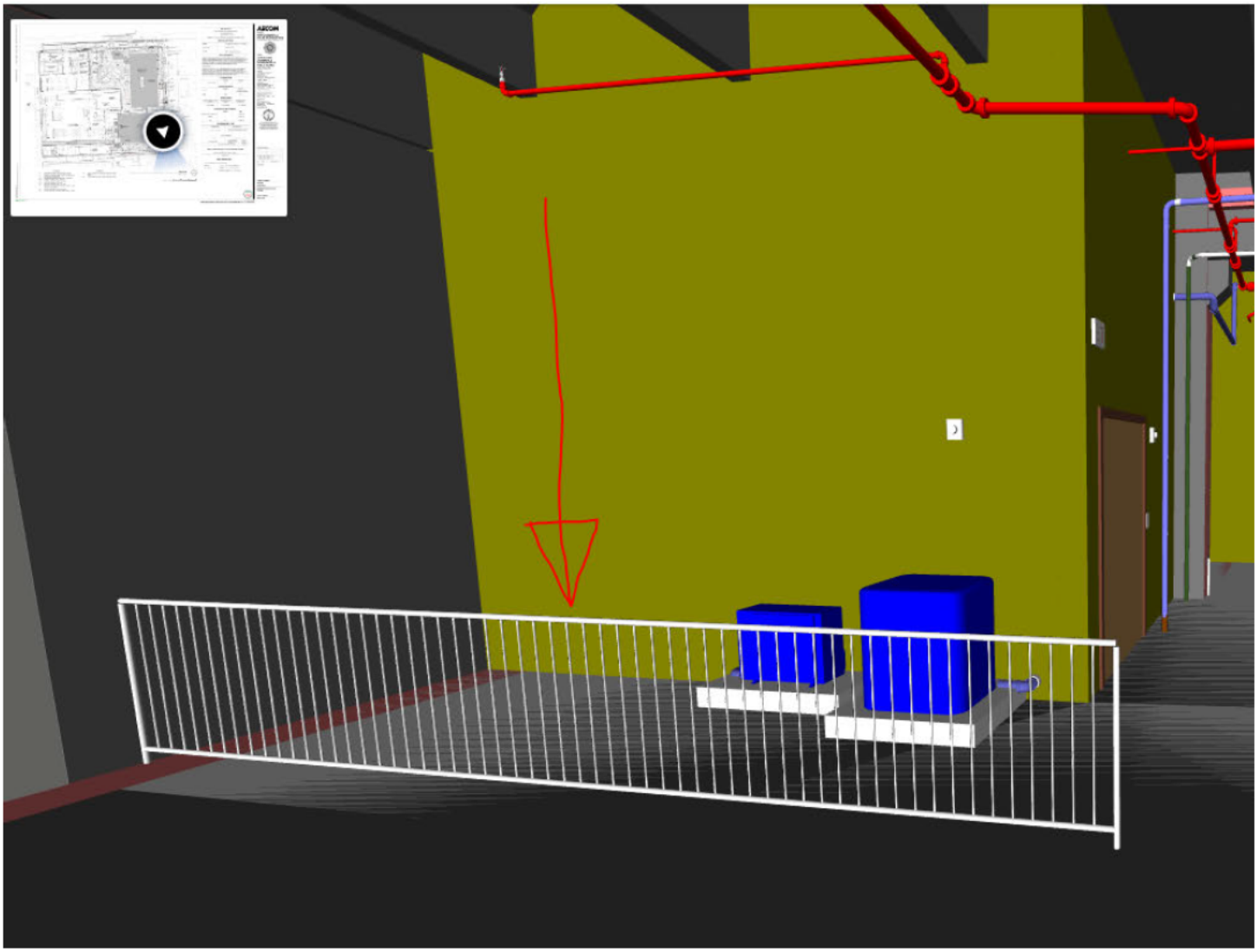

Regards,
Michael Perez-Gurri (MPG)
Assistant Project Manager / Certified General Contractor (CGC)
Fort Lauderdale Police Headquarters Project
Moss
Direct: 561.267.6324 | Office: 954.524.5678
mosscm.com

From: Jose Rodriguez <jrodriguez@hyvacinc.com>
Sent: Wednesday, May 1, 2024 3:51 PM
To: Michael Perez-Gurri <mperezgurri@mosscm.com>
Cc: Larry Hall <lhall@hyvacinc.com>; Jefte Mercily <jmercily@hyvacinc.com>; Pedro <pedro@thunder-electric.com>; Fort Lauderdale Police Headquarters Team <FLPHTeam@mosscm.com>
Subject: RE: Fort Lauderdale Police Headquarters: RFI #475 has been closed

CAUTION: This email originated from outside of Moss

Do not click links or open attachments unless you can confirm the sender and know the content is safe.
Be careful of any attachments or links that ask for your password.

Hey Mike

The walking cooler Condenser unit location information is missing on these responses. Please advise asap.

Thanks

Jose A Rodriguez | Project Manager

Hyvac
Exceeding Expectations

Cell: (305)505-3151
office: (954) 427-3811 ext. 328| fax: 954.426.3762 | email: jrodriguez@hyvacinc.com
312 South Military Trail, Deerfield Beach, FL 33442 | www.hyvacinc.com

---

From: Michael Perez-Gurri <mperezgurri@mosscm.com>
Sent: Friday, April 26, 2024 1:22 PM
To: Jose Rodriguez <jrodriguez@hyvacinc.com>
Cc: Larry Hall <lhall@hyvacinc.com>; Jefte Mercily <jmercily@hyvacinc.com>; Pedro <pedro@thunder-electric.com>; Fort Lauderdale Police Headquarters Team <FLPHTeam@mosscm.com>
Subject: FW: Fort Lauderdale Police Headquarters: RFI #475 has been closed

@Jose Rodriguez

The City has confirmed everything for pricing the PG Walkin Freezer in RFI-475. See below, see attached and screenshot photo below.

Please confirm this is all the information you require to finalize pricing and submittals the PG Walkin Freezer located on PG Level 1:

1) Walk-In Freezer Dimensions = 10' (W) x 11' (L) x 8' (H)
2) Door Layout Dimensions: North Panel = 2'-4"; Door Opening = 3'-0"; South Panel = 4'-8": (2'-4" + 3'-0" + 4'-8" = 10'-0")
3) Door Swing = Right-Handed Outswing Door [Right Hand Reverse (RHR)]
4) Door Opening Size = 3'-0" (W).

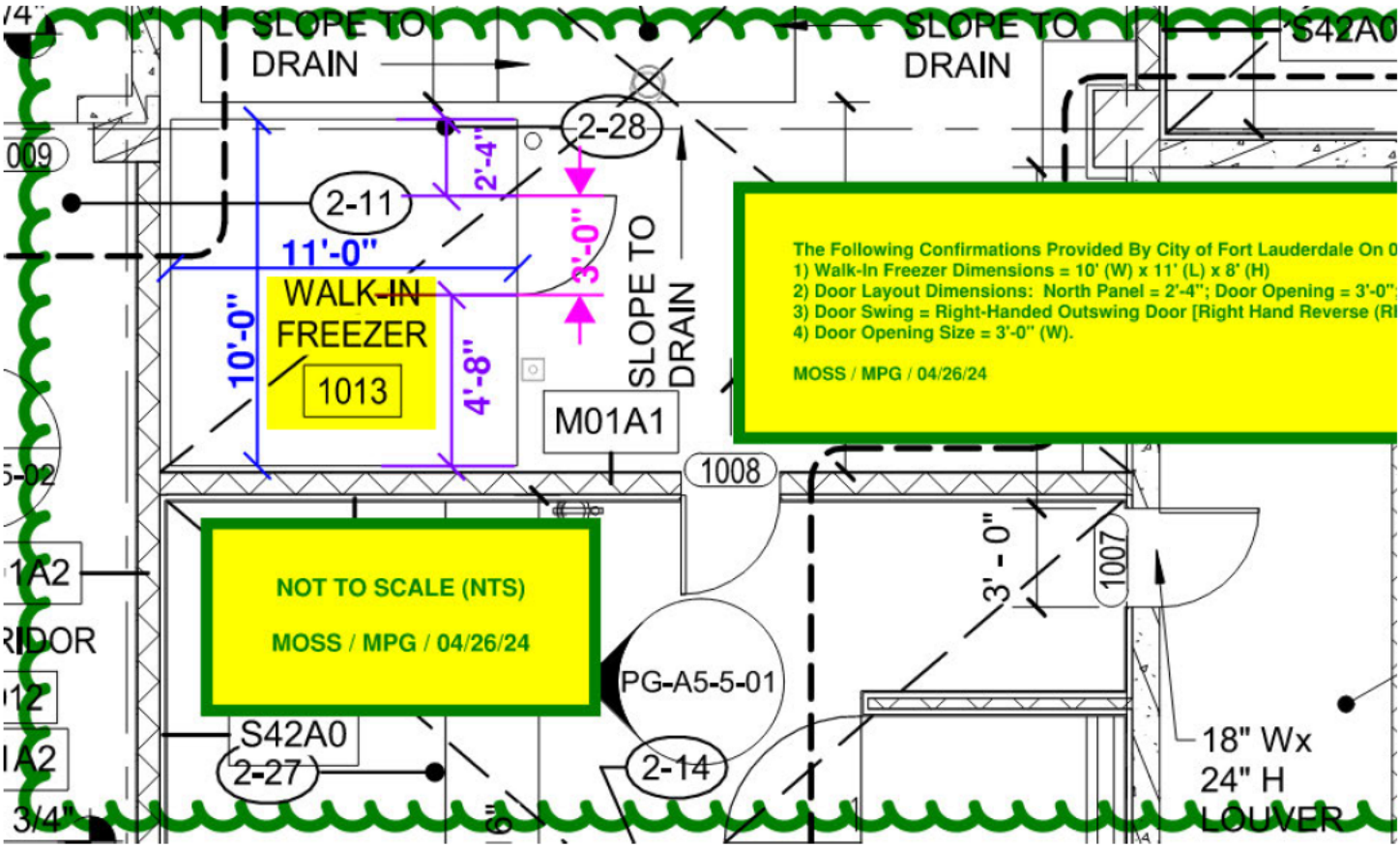

Regards,
Michael Perez-Gurri (MPG)
Assistant Project Manager / Certified General Contractor (CGC)
Fort Lauderdale Police Headquarters Project
Moss
Direct: 561.267.6324 | Office: 954.524.5678
mosscm.com

From: Michael Perez-Gurri (Moss & Associates LLC - FLL) <Moss Associates LLC@us02.procoretech.com>
Sent: Friday, April 26, 2024 1:19 PM
To: Michael Perez-Gurri <mperezgurri@mosscm.com>
Subject: Fort Lauderdale Police Headquarters: RFI #475 has been closed

CAUTION: This email originated from outside of Moss

Do not click links or open attachments unless you can confirm the sender and know the content is safe.

Be careful of any attachments or links that ask for your password.

Fort Lauderdale Police Headquarters

RFI #475 - PG - Level 1 - Walkin Freezer 1013 Clarifications has been closed.

RFI Details

QUESTION 1

Asked By:	Michael Perez-Gurri (Moss & Associates LLC - FLL)
Date:	Tue Apr 9, 2024 at 10:46 am EDT
Location:	PG LEVEL 1>WALK-IN FREEZER 1013
Question:	Please confirm the following regarding the Parking Garage Level 1 Walkin Freezer 1013: 1) Confirm if PG Level 1 Walkin Freezer shall comply with Project Manual Specification Section 114000: "Walk-In Environmental Chamber & Freezer" to furnish & install a 10' (W) x 11' (L) x 8' (H) Freezer Chamber. Refer to attachment. Please confirm how to proceed. 2) Confirm the Freezer's Door layout location and adjacent panel layout dimensions. Refer to attached PG Level 1 Walkin Freezer Contract Drawing Excerpt Design Placeholders. Contract Drawing excerpts d do not provide on layout dimensions for door location or for the adjacent panels. Please confirm how to proceed. 3) Confirm what will be the Freezer Door Swing Direction: A Right-Handed Outswing Door [Right Hand Reverse (RHR)], or a Left-Handed Outswing Doors [Left Hand Reverse (LHR)]? Refer to attached PG Level 1 Walkin Freezer Contract Drawing Excerpts Design Placeholders. Contract Drawing Excerpts Design Placeholders specify a Right-Handed Outswing Door [Right Hand Reverse (RHR)]. Please confirm how to proceed. 4) The attached PG G Level 1 Walkin Freezer Contract Drawing Excerpt Design Placeholders appear to specify a 3'-0" Wide Door Opening. Please confirm Freezer Door Opening Size. Please confirm how to proceed.
Attachments:	24.04.09 - RFI-475 Backup - PG Walk-In Freezer Contract Drawing Excerpts.pdf 24.04.09 - RFI-475 Backup - Specification Section 114000 - Walk-In Enviromental Chamber & Freezer.pdf

Official Response

Answered By:	**David Lovern (City of Fort Lauderdale)**
Date:	**Thu Apr 25, 2024 at 08:57 am EDT**
Response:	**Confirmed on clarifications 2-4.**
Attachments:	**None**

All Replies

Answered By:	**Michael Perez-Gurri (Moss & Associates LLC - FLL)**
Date:	**Fri Apr 26, 2024 at 01:18 pm EDT**
Response:	**Attached is the final coordinated PG Walk-In Freezer RFI-475 Clarifications to Moss's RFI-475 Response below dated 04/24/24 at 6:03PM by the City of Fort Lauderdale's Confirmation below dated 04/25/24 at 8:57AM.**
Attachments:	**24.04.26 - RFI-475 Final City Confirmation Markup.pdf**

Answered By:	**David Lovern (City of Fort Lauderdale)**
Date:	**Thu Apr 25, 2024 at 08:57 am EDT**
Response:	**Confirmed on clarifications 2-4.**
Attachments:	**None**

Answered By:	**Michael Perez-Gurri (Moss & Associates LLC - FLL)**
Date:	**Wed Apr 24, 2024 at 06:03 pm EDT**
Response:	**The City of Fort Lauderdale's Confirmtion Response To RFI Clarification #1 dated 04/22/24 is acknowledged. It is confirmed that the PG Level 1 Walkin Freezer shall comply with Project Manual Specification Section 114000: "Walk-In Environmental Chamber & Freezer" to furnish & install a 10' (W) x 11' (L) x 8' (H) Freezer Chamber.** **However, the Confirmation Response provided in regard to responding to RFI Clarifications #2 - #4 by the City of Fort Lauderdale on 04/22/24 does not fully nor clearly answer as a whole the clarifications originally being asked/submitted.** **General Note #2 on Sheet 04/24/24 states, "*The drawings are not to be scaled, use figured dimensions only*." Attached are scaled markups to illustrate dimensional discrepancies in the**

	Freezer's Design Placeholder in the Contract Documents as figured dimensions are not specified/provided. **Since figured dimensions are not specified/provided in the Contract Document Placeholder, RFI Clarifications #2 - #4 are being reworded and resubmitted so they may be answered by solely stating "*confirmed*":** **2) The Freezer's Design Placeholder in the Contract Documents places the door opening off-centered to the North. Assuming a 3'-0" freezer door opening, please confirm the that the dimensions for the adjacent panel to the North of Door Opening is to equal 2'-4" and the adjacent panel to the South of Door Opening is to equal 4'-8" totaling the specified 10'-0" Width as required by Project Manual Specification Section 114000: "Walk-In Environmental Chamber & Freezer".** **3) The Freezer's Design Placeholder in the Contract Documents illustrate a Right-Handed Outswing Door [Right Hand Reverse (RHR)] that swings out to the North. Please confirm the door swing is to be a Right-Handed Outswing Door [Right Hand Reverse (RHR)].** **4) The Freezer's Design Placeholder in the Contract Documents illustrates what appears to be a 3'-0" (W) door opening. Please confirm the door opening is 3'-0" (W).**
Attachments:	24.04.24 - RFI-475 Moss Counter Response Backup.pdf

Answered By:	**David Lovern (City of Fort Lauderdale)**
Date:	**Mon Apr 22, 2024 at 02:42 pm EDT**
Response:	**Yes. Confirmed with Captain Solomon on all the above on 4.22.24.**
Attachments:	**None**

ADDITIONAL DETAILS

Project:	**Fort Lauderdale Police Headquarters**
Subject:	**PG - Level 1 - Walkin Freezer 1013 Clarifications**
Date Initiated:	**04/09/24**
Created By:	**Michael Perez-Gurri (Moss & Associates LLC - FLL)**
Assigned To:	**Escoto Hernandez, Ambar (AECOM)** **Solomon, Captain Adam (Fort Lauderdale Police Department)**

	Siegel, Evan (AECOM) Thompson, Kristin (City of Fort Lauderdale) Buscemi, Robert (City of Fort Lauderdale) Virgo, Yanique (AECOM) Lovern, David (City of Fort Lauderdale) *(response required)*
Responsible Contractor:	Moss & Associates LLC - FLL
Received From:	Michael Perez-Gurri (Moss & Associates LLC - FLL)
Distribution List:	Chawda, Surabhi (Moss & Associates LLC - FLL) Escobar, Jennifer (Moss & Associates LLC - FLL) Gusain, Aman (Moss & Associates LLC - FLL) Kane, Matthew (Moss & Associates LLC - FLL) Lopez, Angel (Moss & Associates LLC - FLL) Lovern, David (City of Fort Lauderdale) Navarrete, Vanessa (Moss & Associates LLC - FLL) Nottage, D'von (Moss & Associates LLC - FLL) Perez-Gurri, Michael (Moss & Associates LLC - FLL) Wilburn, Dylan (Moss & Associates LLC - FLL)

More details: View online Open In App

Powered By Procore | support@procore.com | https://support.procore.com

Moss & Associates LLC
2101 N. Andrews Avenue
Fort Lauderdale, Florida 33311
P: (954) 524-5678

Project: B372302 Fort Lauderdale Police Headquarters
1300 W Broward Blvd
Fort Lauderdale, Florida 33312

RFI #475: PG - Level 1 - Walkin Freezer 1013 Clarifications

Status	Open		
To	David Lovern (City of Fort Lauderdale) *(Response Required)*	**From**	Michael Perez-Gurri (Moss & Associates LLC - FLL) 2101 N Andrews Avenue Fort Lauderdale, Florida
Date Initiated	Apr 9, 2024	**Due Date**	Apr 16, 2024
Location	PG LEVEL 1>WALK-IN FREEZER 1013	**Project Stage**	
Cost Impact		**Schedule Impact**	
Spec Section	114000 - WALK-IN ENVIRONMENTAL CHAMBER AND FREEZER	**Cost Code**	
Drawing Number		**Reference**	
Linked Drawings			
Received From	Michael Perez-Gurri (Moss & Associates LLC - FLL)	**Sub Job**	
Copies To	Robert Buscemi (City of Fort Lauderdale), Ambar Escoto Hernandez (AECOM), Anthony Greg Fajardo (City of Fort Lauderdale), Matthew Kane (Moss & Associates LLC - FLL), Angel Lopez (Moss & Associates LLC - FLL), David Lovern (City of Fort Lauderdale), D'von Nottage (Moss & Associates LLC - FLL), Michael Perez-Gurri (Moss & Associates LLC - FLL), Evan Siegel (AECOM), Captain Adam Solomon (Fort Lauderdale Police Department), Kristin Thompson (City of Fort Lauderdale), Yanique Virgo (AECOM), Dylan Wilburn (Moss & Associates LLC - FLL)		
Subcontractor RFI #		**Priority**	Critical

Activity

Question

Question from Michael Perez-Gurri Moss & Associates LLC - FLL *on Tuesday, Apr 9, 2024 at 10:46 AM EDT*

Please confirm the following regarding the Parking Garage Level 1 Walkin Freezer 1013:

1) Confirm if PG Level 1 Walkin Freezer shall comply with Project Manual Specification Section 114000: "Walk-In Environmental Chamber & Freezer" to furnish & install a 10' (W) x 11' (L) x 8' (H) Freezer Chamber. Refer to attachment. Please confirm how to proceed.

2) Confirm the Freezer's Door layout location and adjacent panel layout dimensions. Refer to attached PG Level 1 Walkin Freezer Contract Drawing Excerpt Design Placeholders. Contract Drawing excerpts d do not provide on layout dimensions for door location or for the adjacent panels. Please confirm how to proceed.

3) Confirm what will be the Freezer Door Swing Direction: A Right-Handed Outswing Door [Right Hand Reverse (RHR)], or a Left-Handed Outswing Doors [Left Hand Reverse (LHR)]? Refer to attached PG Level 1 Walkin Freezer Contract Drawing Excerpts Design Placeholders. Contract Drawing Excerpts Design Placeholders specify a Right-Handed Outswing Door [Right Hand Reverse (RHR)]. Please confirm how to proceed.

4) The attached PG G Level 1 Walkin Freezer Contract Drawing Excerpt Design Placeholders appear to specify a 3'-0" Wide Door Opening. Please confirm Freezer Door Opening Size. Please confirm how to proceed.

Attachments
24.04.09 - RFI-475 Backup - PG Walk-In Freezer Contract Drawing Excerpts.pdf, 24.04.09 - RFI-475 Backup - Specification Section 114000 - Walk-In Enviromental Chamber & Freezer.pdf

Awaiting an Official Response

All Replies

Response from David Lovern City of Fort Lauderdale *on Friday, May 24, 2024 at 01:42 PM EDT*

Please submit to the design team for review to confirm it meets the basis of design.

Response from Michael Perez-Gurri Moss & Associates LLC - FLL *on Thursday, May 2, 2024 at 11:55 AM EDT*

Attached is the Preliminary Shop Drawing Design for the PG Walk-in Freezer 1013. Please review & confirm it meets the end-user requirements.

Attachments
24.05.02 - RFI-475 - Perliminary Shop Drawing Design - PG Freezer.pdf

Response from Michael Perez-Gurri Moss & Associates LLC - FLL *on Friday, Apr 26, 2024 at 01:18 PM EDT*

Attached is the final coordinated PG Walk-In Freezer RFI-475 Clarifications to Moss's RFI-475 Response below dated 04/24/24 at 6:03PM by the City of Fort Lauderdale's Confirmation below dated 04/25/24 at 8:57AM.

Attachments
24.04.26 - RFI-475 Final City Confirmation Markup.pdf

Response from David Lovern City of Fort Lauderdale *on Thursday, Apr 25, 2024 at 08:57 AM EDT*

Confirmed on clarifications 2-4.

Response from Michael Perez-Gurri Moss & Associates LLC - FLL *on Wednesday, Apr 24, 2024 at 06:03 PM EDT*

The City of Fort Lauderdale's Confirmtion Response To RFI Clarification #1 dated 04/22/24 is acknowledged. It is confirmed that the PG Level 1 Walkin Freezer shall comply with Project Manual Specification Section 114000: "Walk-In Environmental Chamber & Freezer" to furnish & install a **10' (W) x 11' (L) x 8' (H)** Freezer Chamber.

However, the Confirmation Response provided in regard to responding to RFI Clarifications #2 - #4 by the City of Fort Lauderdale on 04/22/24 does not fully nor clearly answer as a whole the clarifications originally being asked/submitted.

General Note #2 on Sheet 04/24/24 states, "*The drawings are not to be scaled, use figured dimensions only*." Attached are scaled markups to illustrate dimensional discrepancies in the Freezer's Design Placeholder in the Contract Documents as figured dimensions are not specified/provided.

Since figured dimensions are not specified/provided in the Contract Document Placeholder, RFI Clarifications #2 - #4 are being reworded and resubmitted so they may be answered by solely stating "***confirmed***":

2) The Freezer's Design Placeholder in the Contract Documents places the door opening off-centered to the North. Assuming a **3'-0"** freezer door opening, please **confirm** the that the dimensions for the adjacent panel to the North of Door Opening is to equal **2'-4"** and the adjacent panel to the South of Door Opening is to equal **4'-8"** totaling the specified **10'-0"** Width as required by Project Manual Specification Section 114000: "Walk-In Environmental Chamber & Freezer".

3) The Freezer's Design Placeholder in the Contract Documents illustrate a Right-Handed Outswing Door [Right Hand Reverse (RHR)] that swings out to the North. Please **confirm** the door swing is to be a Right-Handed Outswing Door [Right Hand Reverse (RHR)].

4) The Freezer's Design Placeholder in the Contract Documents illustrates what appears to be a 3'-0" (W) door opening. Please **confirm** the door opening is 3'-0" (W).

Attachments
24.04.24 - RFI-475 Moss Counter Response Backup.pdf

Response from David Lovern City of Fort Lauderdale *on Monday, Apr 22, 2024 at 02:42 PM EDT*

Yes. Confirmed with Captain Solomon on all the above on 4.22.24.