CITY OF FORT LAUDERDALE

CONTRACT

LAS OLAS ISLES UNDERGROUNDING OF OVERHEAD UTILITIES (12453-613)

DESCRIPTION

Ferreira Construction Southern Division Co. Inc.

CONTRACTOR

$4,733,400

AMOUNT

February 7, 2023

COMMISSION APPROVAL DATE

CITY OF FORT LAUDERDALE
CONSTRUCTION AGREEMENT

THIS Agreement made and entered into this 7th day of February, 2023, by and between the City of Fort Lauderdale, a Florida municipal corporation ("City") and Ferreira Construction Southern Division Co. Inc., a Florida corporation ("Contractor") ("Party" or collectively "Parties")

WHEREAS, the City Commission of the City of Fort Lauderdale, Florida at its meeting of December 21, 2021, authorized the proper officials by motion to execute an Agreement between Contractor and City authorizing the performance of services in connection with the Las Olas Isles Undergrounding of Overhead Utilities Project in an amount not to exceed $4,733,400 (ITB 12453-613 Project 11715) ("Original Agreement"); and

WHEREAS, due to miscalculations and omissions in the original Project scope and due to delays in coordination and materials delivery, the Original Agreement expired on September 16, 2022; and

WHEREAS, the City and Contractor are desirous of completing the Project.

NOW, THEREFORE, the Parties hereto, in consideration of the mutual covenants, agreements, terms, and conditions contained herein, do agree as to the following:

1.1 The recitations set forth above are true and correct and are incorporated herein. Initial capitalized terms or other such terms used herein shall have the same meaning given such terms in the Original Agreement, unless otherwise defined herein or unless the context otherwise indicates.

1.2 The Original Agreement and all terms and conditions of the Original Agreement except as modified herein, are incorporated into and made part of this agreement and are attached hereto as Exhibit A.

1.3 This Agreement will be retroactive to September 16, 2022.

1.4 The Contract Time as defined in the Original Agreement shall be understood to also include the period of time from the termination of the Original Agreement to the time of execution of this Agreement.

1.5 Section 5.2 of the Original Agreement is hereby deleted and replaced with: "The Work shall be Substantially Completed within 360 calendar days after the date of the Notice to Proceed is issued, which is March 15, 2023."

1.6 Section 5.3 of the Original Agreement is hereby deleted and replaced with: "The Work shall be finally completed on the Final Completion Date within 420 Calendar Days

after the date when the Contract Time commences to run as provided in the Notice to Proceed. The date of Final Completion is May 15, 2023."

1.7 The City's Project Manager is hereby changed to Gary Foster, whose address is 100 North Andrews Avenue, 4th Floor, Fort Lauderdale, FL 33301, telephone number 954-828-6233 and email address is gfoster@fortlauderdale.gov.

[REMAINING SPACE INTENTIONALLY LEFT BLANK]

IN WITNESS OF THE FOREGOING, the Parties have set their hands and seals the day and year first written above.

CITY

CITY OF FORT LAUDERDALE, a Florida municipal

By: _____
GREG CHAVARRIA
City Manager

Date: 3/20/23

ATTEST:

By: _____
for DAVID R. SOLOMAN
City Clerk

Approved as to Legal Form:
D'WAYNE SPENCE, Interim City Attorney

By: _____
RHONDA MONTOYA HASAN
Assistant City Attorney

CONTRACTOR

WITNESSES:

FERREIRA CONSTRUCTION SOUTHERN DIVISION CO. INC., a Florida corporation

By: _____
~~Nelson Ferreira, President~~
Danny Garcia, Vice-President

Andres Perez.
Print Name

Douglas Conley
Print Name

ATTEST:

By: _____
Secretary

(CORPORATE SEAL)

STATE OF FLORIDA :

COUNTY OF Miami-Dade :

The foregoing instrument was acknowledged before me by means of ☑ physical presence or ☐ online notarization, this 7th day of March, 2023, by ~~Nelson Ferreira, as President~~ for Ferreira Construction Southern Division Co. Inc., a Florida corporation.
-Danny Garcia as Vice-President

CINDY HERNANDEZ NOTARY PUBLIC MY COMMISSION EXPIRES 6-16-2026 STATE OF FLORIDA COMMISSION NUMBER HH 277185

_____
(Signature of Notary Public - State of Florida)

Cindy Hernández
(Print, Type, or Stamp Commissioned Name of Notary Public)

Personally Known ✓ OR Produced Identification_____
Type of Identification Produced: _____

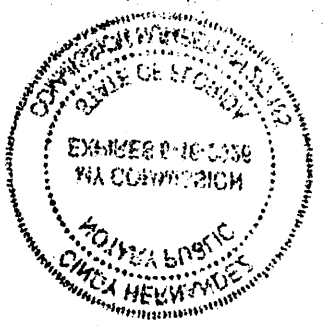

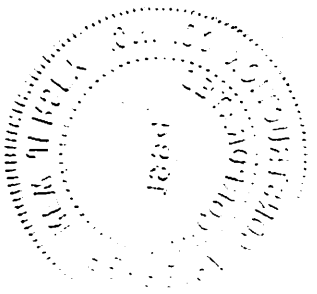

Client# 353923 FERRECONST

ACORD™ CERTIFICATE OF LIABILITY INSURANCE

DATE (MM/DD/YYYY) 6/28/2022

THIS CERTIFICATE IS ISSUED AS A MATTER OF INFORMATION ONLY AND CONFERS NO RIGHTS UPON THE CERTIFICATE HOLDER. THIS CERTIFICATE DOES NOT AFFIRMATIVELY OR NEGATIVELY AMEND, EXTEND OR ALTER THE COVERAGE AFFORDED BY THE POLICIES BELOW. THIS CERTIFICATE OF INSURANCE DOES NOT CONSTITUTE A CONTRACT BETWEEN THE ISSUING INSURER(S), AUTHORIZED REPRESENTATIVE OR PRODUCER, AND THE CERTIFICATE HOLDER.

IMPORTANT: If the certificate holder is an ADDITIONAL INSURED, the policy(ies) must have ADDITIONAL INSURED provisions or be endorsed. If SUBROGATION IS WAIVED, subject to the terms and conditions of the policy, certain policies may require an endorsement. A statement on this certificate does not confer any rights to the certificate holder in lieu of such endorsement(s).

PRODUCER	CONTACT NAME: Gianna Costello	
Conner Strong & Buckelew 32 Old Slip, Suite 32B New York, NY 10005	PHONE (A/C, No, Ext): 646-891-4983	FAX (A/C, No): 646-862-8242
	E-MAIL ADDRESS: gcostello@connerstrong.com	
	INSURER(S) AFFORDING COVERAGE	NAIC #
	INSURER A : Liberty Mutual Fire Insurance Co.	23035
INSURED Ferreira Construction Co, Inc. dba Ferreira Construction Southern Division 9455 NW 104th Street Medley, FL 33178	INSURER B : Endurance American Specialty Ins. Co.	41718
	INSURER C : Westfield Specialty Insurance Company	16992
	INSURER D : Arch Specialty Insurance Company	21199
	INSURER E :	
	INSURER F :	

COVERAGES CERTIFICATE NUMBER: REVISION NUMBER:

THIS IS TO CERTIFY THAT THE POLICIES OF INSURANCE LISTED BELOW HAVE BEEN ISSUED TO THE INSURED NAMED ABOVE FOR THE POLICY PERIOD INDICATED. NOTWITHSTANDING ANY REQUIREMENT, TERM OR CONDITION OF ANY CONTRACT OR OTHER DOCUMENT WITH RESPECT TO WHICH THIS CERTIFICATE MAY BE ISSUED OR MAY PERTAIN, THE INSURANCE AFFORDED BY THE POLICIES DESCRIBED HEREIN IS SUBJECT TO ALL THE TERMS, EXCLUSIONS AND CONDITIONS OF SUCH POLICIES. LIMITS SHOWN MAY HAVE BEEN REDUCED BY PAID CLAIMS.

INSR LTR	TYPE OF INSURANCE	ADDL INSR	SUBR WVD	POLICY NUMBER	POLICY EFF (MM/DD/YYYY)	POLICY EXP (MM/DD/YYYY)	LIMITS	
A	X COMMERCIAL GENERAL LIABILITY			TB2631510814022	07/01/2022	07/01/2023	EACH OCCURRENCE	$2,000,000
	CLAIMS-MADE X OCCUR						DAMAGE TO RENTED PREMISES (Ea occurrence)	$1,000,000
							MED EXP (Any one person)	$10,000
							PERSONAL & ADV INJURY	$2,000,000
	GEN'L AGGREGATE LIMIT APPLIES PER:						GENERAL AGGREGATE	$4,000,000
	POLICY X PRO-JECT X LOC						PRODUCTS - COMP/OP AGG	$4,000,000
	OTHER:							$
A	AUTOMOBILE LIABILITY			AS2631510814012	07/01/2022	07/01/2023	COMBINED SINGLE LIMIT (Ea accident)	$2,000,000
	X ANY AUTO						BODILY INJURY (Per person)	$
	OWNED AUTOS ONLY / SCHEDULED AUTOS						BODILY INJURY (Per accident)	$
	X HIRED AUTOS ONLY / X NON-OWNED AUTOS ONLY						PROPERTY DAMAGE (Per accident)	$
								$
B	UMBRELLA LIAB X OCCUR			EXC30000705504	07/01/2022	07/01/2023	EACH OCCURRENCE	$3,000,000
	X EXCESS LIAB / CLAIMS-MADE						AGGREGATE	$3,000,000
	DED / RETENTION $							$
A	WORKERS COMPENSATION AND EMPLOYERS' LIABILITY Y/N			WA263D510814032	07/01/2022	07/01/2023	X PER STATUTE / OTH-ER	
	ANY PROPRIETOR/PARTNER/EXECUTIVE OFFICER/MEMBER EXCLUDED? N	N/A					E.L. EACH ACCIDENT	$1,000,000
	(Mandatory in NH)						E.L. DISEASE - EA EMPLOYEE	$1,000,000
	If yes, describe under DESCRIPTION OF OPERATIONS below						E.L. DISEASE - POLICY LIMIT	$1,000,000
C	Excess Liability			XSL00014GY	07/01/2022	07/01/2023	$2M Occ. / $2M Agg	
D	Excess Liability			UXP104938200	07/01/2022	07/01/2023	$3M Occ. / $3M Agg	

DESCRIPTION OF OPERATIONS / LOCATIONS / VEHICLES (ACORD 101, Additional Remarks Schedule, may be attached if more space is required)

Coverage: Excess Liability (4th Layer - $5M x $8M)
Carrier: Colony Insurance Company (NAIC# 39993)
Policy Term: 07/01/2022 to 07/01/2023
Policy #: AR6461134
Limits: $2,500,000 Per Occurrence / Aggregate (part of $5,000,000 Quota Share with Evanston Insurance
(See Attached Descriptions)

CERTIFICATE HOLDER

City of Fort Lauderdale
100 N. Andrews Avenue, 619
Fort Lauderdale, FL 33301

CANCELLATION

SHOULD ANY OF THE ABOVE DESCRIBED POLICIES BE CANCELLED BEFORE THE EXPIRATION DATE THEREOF, NOTICE WILL BE DELIVERED IN ACCORDANCE WITH THE POLICY PROVISIONS.

AUTHORIZED REPRESENTATIVE

W. Michael Traynard

© 1988-2015 ACORD CORPORATION. All rights reserved.

DESCRIPTIONS (Continued from Page 1)

Company)

Coverage: Excess Liability (4th Layer - $5Mx $8M)
Carrier: Evanston Insurance Company (NAIC#: 35378)
Policy Term: 07/01/2022 to 07/01/2023
Policy #: MKLV7EUE100768
Limits: $2,500,000 Per Occurrence / Aggregate (part of $5,000,000 Quota Share with Colony Insurance Company)

Coverage: Excess Liability (5th Layer - $12Mx $13M)
Carrier: Navigators Insurance Company (NAIC#: 42307)
Policy Term: 07/01/2022 to 07/01/2023
Policy #: NY22EXCZ02BJWIV
Limits: $12,000,000 Per Occurrence / Aggregate

Coverage: Commercial Property & Inland Marine Policy
Carrier: Aspen American Insurance Company (NAIC: 43460)
Effective: 07/01/2022 - 07/01/2023
Policy #: IMACUQM22
Limits Installation Floater: $3,000,000 Jobsite Limit; $5,000,000 Catastrophe Limit
Riggers Liability: Included

RE: FCC 4358 - Project Number: 11715 - Bid 12453-613 Las Olas Isles Undergrounding of Overhead Utilities

City of Fort Lauderdale, its officials, employees, and volunteers are Additional Insured on a primary and non-contributory basis on the above referenced Commercial General Liability Policy if required by written contract. A waiver of subrogation applies as required by written contract and permitted by law.

Bond No. 47-SUR-300088-01-0446

RIDER

To be attached to and form a part of Payment/Performance Bond, No. 47-SUR-300088-01-0446

dated the 14th day of January , 2022 issued by

Berkshire Hathaway Specialty Insurance Company,1314 Douglas Street, Suite 1400, Omaha, NE 68102 as Surety, on behalf of

Ferreira Construction Southern Division Co., Inc., 9455 NW 104th Street, Medley, FL 33178, as Principal,

in the penal sum of Four Million Seven Hundred Thirty-Three Thousand Four Hundred Dollars and Zero Cents

Dollars ($4,733,400.00), and in favor of City of Fort Lauderdale

In consideration of the premium charged for the attached bond, it is hereby agreed that the attached bond be amended as follows:

Bond Amount: From Four Million Seven Hundred Thirty-Three Thousand Four Hundred Dollars and Zero Cents ($4,733,400.00)
to Five Million Nine Hundred Sixty-One Thousand Five Hundred Forty-One Dollars and Fifty Cents ($5,961,541.50)

Provided, However, that the attached bond shall be subject to all its agreements, limitations and conditions except as herein expressly modified, and further that the liability of the Surety under the attached bond and the attached bond as amended by this rider shall not be cumulative.

This rider shall become effective as of the 27th day of February, 2023

Signed, sealed and dated this 27th day of February, 2023

Ferreira Construction Southern Division Co., Inc.

ATTEST:

PRINCIPAL { By Danny Garcia Vice President

Berkshire Hathaway Specialty Insurance Company

ACCEPTED:

By Marisol Mojica

Marisol Mojica, Attorney-in-Fact

Bond No. 47-SUR-300088-01-0446

RIDER

To be attached to and form a part of Payment/Performance Bond, No. 47-SUR-300088-01-0446

dated the 14th day of January , 2022 issued by

Berkshire Hathaway Specialty Insurance Company,1314 Douglas Street, Suite 1400, Omaha, NE 68102 as Surety, on behalf of

Ferreira Construction Southern Division Co., Inc., 9455 NW 104th Street, Medley, FL 33178, as Principal,

in the penal sum of Four Million Seven Hundred Thirty-Three Thousand Four Hundred Dollars and Zero Cents

Dollars ($4,733,400.00), and in favor of City of Fort Lauderdale

In consideration of the premium charged for the attached bond, it is hereby agreed that the attached bond be amended as follows:

Bond Amount: From Four Million Seven Hundred Thirty-Three Thousand Four Hundred Dollars and Zero Cents ($4,733,400.00)

to Five Million Nine Hundred Sixty-One Thousand Five Hundred Forty-One Dollars and Fifty Cents ($5,961,541.50)

Provided, However, that the attached bond shall be subject to all its agreements, limitations and conditions except as herein expressly modified, and further that the liability of the Surety under the attached bond and the attached bond as amended by this rider shall not be cumulative.

This rider shall become effective as of the 27th day of February, 2023

Signed, sealed and dated this 27th day of February, 2023

ATTEST:

_____

PRINCIPAL

Ferreira Construction Southern Division Co., Inc.

By _____

Danny Garcia Vice President

ACCEPTED:

_____

Berkshire Hathaway Specialty Insurance Company

By Marisol Mojica

Marisol Mojica, Attorney-in-Fact

ACKNOWLEDGEMENT OF CONTRACTOR - IF A CORPORATION

STATE OF Florida

COUNTY OF Miami-Dade

ON THE 3rd DAY OF March, 2023 BEFORE ME PERSONALLY APPEARED

Danny Garcia TO BE KNOWN, WHO, BEING BY ME DULY SWORN, DID DEPOSE AND SAY; THAT (S)HE IS THE Vice-President OF Ferreira Construction Southern Division Co., Inc. THE CORPORATION THAT EXECUTED THE FOREGOING INSTRUMENT, AND ACKNOWLEDGED TO ME THAT SUCH CORPORATION EXECUTED THE SAME.

IN WITNESS WHEREOF, I HAVE HEREUNTO SET MY HAND AND AFFIXED MY OFFICIAL SEAL, AT MY OFFICE IN THE ABOVE COUNTY, THE DAY AND YEAR WRITTEN ABOVE.

CINDY HERNANDEZ NOTARY PUBLIC MY COMMISSION EXPIRES 6-16-2026 STATE OF FLORIDA COMMISSION NUMBER HH 277185

Notary Public

ACKNOWLEDGEMENT OF SURETY COMPANY

STATE OF New Jersey

COUNTY OF Morris

ON THE 27th DAY OF February, 2023 BEFORE ME PERSONALLY APPEARED Marisol Mojica TO ME KNOWN, WHO BEING BY ME DULY SWORN, DID DEPOSE AND SAY; THAT (S)HE IS THE ATTORNEY-IN-FACT OF Berkshire Hathaway Specialty Insurance Company, THE CORPORATION THAT EXECUTED THE FOREGOING INSTRUMENT, AND ACKNOWLEDGED TO ME THAT SUCH CORPORATION EXECUTED THE SAME.

IN WITNESS WHEREOF, I HAVE HEREUNTO SET MY HAND AND AFFIXED MY OFFICIAL SEAL, AT MY OFFICE IN THE ABOVE COUNTY, THE DAY AND YEAR WRITTEN ABOVE.

Notary Public

Ursula Jakubiak
A Notary Public of New Jersey
My Commission Expires March 8, 2026

Berkshire Hathaway Specialty Insurance

Power Of Attorney

BERKSHIRE HATHAWAY SPECIALTY INSURANCE COMPANY
NATIONAL INDEMNITY COMPANY / NATIONAL LIABILITY & FIRE INSURANCE COMPANY

Know all men by these presents, that **BERKSHIRE HATHAWAY SPECIALTY INSURANCE COMPANY**, a corporation existing under and by virtue of the laws of the State of Nebraska and having an office at One Lincoln Street, 23rd Floor, Boston, Massachusetts 02111, **NATIONAL INDEMNITY COMPANY**, a corporation existing under and by virtue of the laws of the State of Nebraska and having an office at 3024 Harney Street, Omaha, Nebraska 68131 and **NATIONAL LIABILITY & FIRE INSURANCE COMPANY**, a corporation existing under and by virtue of the laws of the State of Connecticut and having an office at 100 First Stamford Place, Stamford, Connecticut 06902 (hereinafter collectively the "Companies"), pursuant to and by the authority granted as set forth herein, do hereby name, constitute and appoint: **Marisol Mojica, Kevin T. Walsh, Jr., Thomas MacDonald, Krystal L. Stravato, 100 South Jefferson Road, Suite 101, of the city of Whippany, State of New Jersey,** their true and lawful attorney(s)-in-fact to make, execute, seal, acknowledge, and deliver, for and on their behalf as surety and as their act and deed, any and all undertakings, bonds, or other such writings obligatory in the nature thereof, in pursuance of these presents, the execution of which shall be as binding upon the Companies as if it has been duly signed and executed by their regularly elected officers in their own proper persons. **This authority for the Attorney-in-Fact shall be limited to the execution of the attached bond(s) or other such writings obligatory in the nature thereof.**

In witness whereof, this Power of Attorney has been subscribed by an authorized officer of the Companies, and the corporate seals of the Companies have been affixed hereto this date of December 20, 2018. This Power of Attorney is made and executed pursuant to and by authority of the Bylaws, Resolutions of the Board of Directors, and other Authorizations of **BERKSHIRE HATHAWAY SPECIALTY INSURANCE COMPANY, NATIONAL INDEMNITY COMPANY** and **NATIONAL LIABILITY & FIRE INSURANCE COMPANY**, which are in full force and effect, each reading as appears on the back page of this Power of Attorney, respectively. **The following signature by an authorized officer of the Company may be a facsimile, which shall be deemed the equivalent of and constitute the written signature of such officer of the Company for all purposes regarding this Power of Attorney, including satisfaction of any signature requirements on any and all undertakings, bonds, or other such writings obligatory in the nature thereof, to which this Power of Attorney applies.**

BERKSHIRE HATHAWAY SPECIALTY INSURANCE COMPANY,

By: _____
David Fields, Executive Vice President

NATIONAL INDEMNITY COMPANY, NATIONAL LIABILITY & FIRE INSURANCE COMPANY,

By: _____
David Fields, Vice President

NOTARY
State of Massachusetts, County of Suffolk, ss:
On this 20th day of December, 2018, before me appeared David Fields, Executive Vice President of BERKSHIRE HATHAWAY SPECIALTY INSURANCE COMPANY and Vice President of NATIONAL INDEMNITY COMPANY and NATIONAL LIABILITY & FIRE INSURANCE COMPANY, who being duly sworn, says that his capacity is as designated above for such Companies; that he knows the corporate seals of the Companies; that the seals affixed to the foregoing instrument are such corporate seals; that they were affixed by order of the board of directors or other governing body of said Companies pursuant to its Bylaws, Resolutions and other Authorizations, and that he signed said instrument in that capacity of said Companies.

[Notary Seal]

GEOFFERY A. DELISIO
Notary Public
Commonwealth of Massachusetts
My Comm. Expires November 29, 2024

_____
Notary Public

I, Ralph Tortorella, the undersigned, Officer of **BERKSHIRE HATHAWAY SPECIALTY INSURANCE COMPANY, NATIONAL INDEMNITY COMPANY** and **NATIONAL LIABILITY & FIRE INSURANCE COMPANY**, do hereby certify that the above and foregoing is a true and correct copy of the Power of Attorney executed by said Companies which is in full force and effect and has not been revoked. IN TESTIMONY WHEREOF, see hereunto affixed the seals of said Companies this February 27, 2023 .

_____
Officer

To verify the authenticity of this Power of Attorney please contact us at: BHSI Surety Department, Berkshire Hathaway Specialty Insurance Company, One Lincoln Street, 23rd Floor Boston, MA 02111 | (770) 625-2516 or by email at Jennifer.Porter@bhspecialty.com *THIS POWER OF ATTORNEY IS VOID IF ALTERED*

To notify us of a claim please contact us on our 24-hour toll free number at (855) 453-9675, via email at claimsnotice@bhspecialty.com, via fax to (617) 507-8259, or via mail.

BERKSHIRE HATHAWAY SPECIALTY INSURANCE COMPANY

1314 Douglas Street, Suite 1400, Omaha, Nebraska 68102-1944

ADMITTED ASSETS*

	12/31/2021	12/31/2020	12/31/2019
Total invested assets	$ 6,504,184,299	$ 5,475,240,588	$ 5,172,183,338
Premium & agent balances (n	552,510,359	603,615,506	368,086,012
All other assets	142,765,038	157,897,676	127,524,677
Admitted Assets	$ 7,199,459,696	$ 6,236,753,770	$ 5,667,794,027

LIABILITIES & SURPLUS*

	12/31/2021	12/31/2020	12/31/2019
Loss & loss exp. unpaid	$ 1,142,116,028	$ 921,923,948	$ 634,745,558
Unearned premiums	484,660,143	372,836,160	314,117,549
All other liabilities	1,163,007,684	1,054,922,210	744,738,458
Total Liabilities	2,789,783,855	2,349,682,318	1,693,601,565
Total Policyholders' Surplu	4,409,675,842	3,887,071,452	3,974,192,463
Total Liabilities & Surplus	$ 7,199,459,697	$ 6,236,753,770	$ 5,667,794,028

* Assets, liabilities and surplus are presented on a Statutory Accounting Basis as promulgated by the NAIC and/or the laws of the company's domiciliary state.

Maureen Lewis

From: Maureen Lewis
Sent: Thursday, March 9, 2023 9:33 AM
To: Alisha Auth
Subject: RE: P11715 Las Olas Isles Undergrounding of Overhead Utilities - 2023 REVISED AGREEMENT [Surety Rider and Insurance]

Good morning,
The expiry date on the insurance is 7/1/2023. Please see link below for contract.

Z:\11000\700-799\P11715\CONTRACT\2023 REVISED CONTRACT\Exhibit 1 - Agreement.pdf

Maureen Lewis MBA, CPPB | Senior Procurement Specialist
City of Fort Lauderdale | Procurement Services Division
100 N. Andrews Ave. | Fort Lauderdale FL 33301
P (954) 828-5239 | F (954) 828-5576 | maureenl@fortlauderdale.gov
Accountability – Ethics – Impartiality – Professionalism – Service – Transparency

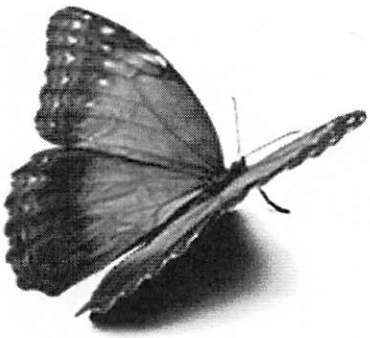

In everything, give thanks!!

ARE YOU COMPETING FOR CITY BUSINESS? CLICK HERE TO REGISTER IN OUR NEW PROCUREMENT SOFTWARE SYSTEM.

From: Alisha Auth <AAuth@fortlauderdale.gov>
Sent: Wednesday, March 8, 2023 4:51 PM
To: Maureen Lewis <MLewis@fortlauderdale.gov>
Subject: RE: P11715 Las Olas Isles Undergrounding of Overhead Utilities - 2023 REVISED AGREEMENT [Surety Rider and Insurance]

Hi Maureen,

The insurance meets the minimum requirements outlined in the attached agreement; however, the certificate date is from June 2022. Do we have a current contract in place that this new agreement is replacing? I would like to see an updated certificate so that we can ensure all coverages are still in place as outlined. As for the bond, the surety company meets the City's AM Best requirements and is approved.

Thank you.

Alisha Auth, ARM
City of Fort Lauderdale I Human Resources Department I Risk Management Division
100 N. Andrews Avenue, 3rd Floor I Fort Lauderdale, Florida 33301
Email: aauth@fortlauderdale.gov I Phone: (954) 828-5179 I Fax: (954) 828-5439

#WeAre #FTL

The City of Fort Lauderdale is a public entity subject to Chapter 119 of the Florida Statutes concerning public records. Email messages to and from employees or officials are covered under such laws and thus subject to public disclosure.

From: Maureen Lewis <MLewis@fortlauderdale.gov>
Sent: Monday, March 6, 2023 4:08 PM
To: Alisha Auth <AAuth@fortlauderdale.gov>
Subject: RE: P11715 Las Olas Isles Undergrounding of Overhead Utilities - 2023 REVISED AGREEMENT [Surety Rider and Insurance]

Attached for your review are the insurance and the Surety Bond Rider as requested. The original 2021 insurance requirements is also attached.
Thanks.

Maureen Lewis MBA, CPPB | Senior Procurement Specialist
City of Fort Lauderdale | Procurement Services Division
100 N. Andrews Ave. | Fort Lauderdale FL 33301
P (954) 828-5239 | F (954) 828-5576 | maureenl@fortlauderdale.gov
Accountability – Ethics – Impartiality – Professionalism – Service – Transparency

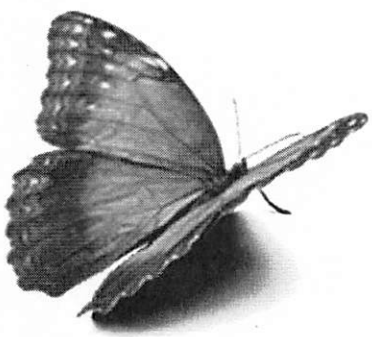

In everything, give thanks!!

ARE YOU COMPETING FOR CITY BUSINESS? CLICK HERE TO REGISTER IN OUR NEW PROCUREMENT SOFTWARE SYSTEM.

From: Alisha Auth <AAuth@fortlauderdale.gov>
Sent: Wednesday, February 22, 2023 1:25 PM
To: Brandy Leighton <BLeighton@fortlauderdale.gov>
Cc: Gary Foster <GFoster@fortlauderdale.gov>; Maureen Lewis <MLewis@fortlauderdale.gov>
Subject: RE: P11715 Las Olas Isles Undergrounding of Overhead Utilities - CAMs and Change Order

Hi Brandy,

We would require confirmation that they have increased their surety bond for the amount of the entire project – not necessarily a new bond.

Hope this helps. Thanks!

Alisha Auth, ARM
City of Fort Lauderdale I Human Resources Department I Risk Management Division
100 N. Andrews Avenue, 3rd Floor I Fort Lauderdale, Florida 33301
Email: aauth@fortlauderdale.gov I Phone: (954) 828-5179 I Fax: (954) 828-5439

The City of Fort Lauderdale is a public entity subject to Chapter 119 of the Florida Statutes concerning public records. Email messages to and from employees or officials are covered under such laws and thus subject to public disclosure.

From: Brandy Leighton <BLeighton@fortlauderdale.gov>
Sent: Friday, February 17, 2023 9:46 AM
To: Alisha Auth <AAuth@fortlauderdale.gov>
Cc: Gary Foster <GFoster@fortlauderdale.gov>; Maureen Lewis <MLewis@fortlauderdale.gov>
Subject: RE: P11715 Las Olas Isles Undergrounding of Overhead Utilities - CAMs and Change Order

Good morning Alisha,

I have asked for an updated certificate of insurance. What is your requirement on the surety bond since we have a new agreement and $1,228,141.50 change order. If we need a new surety bond, would it be for the change order amount only, or the entire project amount plus the change order amount which is equivalent to $5,961,541.50? Thank you for the clarification!

Kind Regards,

Brandy Leighton, P.E., PMP
Senior Project Manager
City of Fort Lauderdale
Public Works | Engineering Services
101 NE 3rd Avenue #1420, Fort Lauderdale, FL 33301
Office: 954-828-5326 | Fax: 954-828-5074
Email: Bleighton@fortlauderdale.gov

From: Brandy Leighton
Sent: Wednesday, February 15, 2023 4:26 PM
To: Alisha Auth <AAuth@fortlauderdale.gov>
Subject: P11715 Las Olas Isles Undergrounding of Overhead Utilities - CAMs and Change Order

Please see attached for your reference:
Final Walk on CAM for new agreement
Email with draft CAM for change order and draft Change Order

Thank you,

Brandy Leighton, P.E., PMP
Senior Project Manager
City of Fort Lauderdale
Public Works | Engineering Services
101 NE 3rd Avenue #1420, Fort Lauderdale, FL 33301
Office: 954-828-5326 | Fax: 954-828-5074
Email: Bleighton@fortlauderdale.gov





ARE YOU COMPETING FOR CITY BUSINESS? CLICK HERE TO REGISTER IN OUR NEW PROCUREMENT SOFTWARE SYSTEM.

PLEASE NOTE: Florida has a very broad public records law. Most written communications to or from City of Fort Lauderdale employees or officials regarding City business are public records available to the public and media upon request. Your e-mail communications may be subject to public disclosure.

Think GREEN! Please do not print this email unless it is necessary.

EXHIBIT A

CITY OF FORT LAUDERDALE

CONTRACT

LAS OLAS ISLES UNDERGROUNDING OF OVERHEAD UTILITIES (12453-613)
DESCRIPTION

Ferreira Construction Southern Division Co. Inc.
CONTRACTOR

$4,733,400
AMOUNT

December 21, 2021
COMMISSION APPROVAL DATE

CITY OF FORT LAUDERDALE
CONSTRUCTION AGREEMENT

THIS Agreement made and entered into this 21st day of December, 2021, by and between the City of Fort Lauderdale, a Florida municipal corporation ("City") and Ferreira Construction Southern Division Co. Inc., a Florida Profit Corporation ("Contractor"), ("Party" or collectively "Parties").

WHEREAS, the City desires to retain a contractor for the Project as expressed in its Invitation to Bid No. 12453-613, Project Number 11715, which was opened on November 3, 2020; and

WHEREAS, the Contractor has expressed its willingness and capability to perform the necessary work to accomplish the Project;

NOW, THEREFORE, the City and the Contractor, in consideration of the mutual covenants and conditions contained herein and for other good and valuable consideration, the receipt and sufficiency are hereby acknowledged, agree as follows:

ARTICLE 1 – DEFINITIONS

Whenever used in this Agreement or in other Contract Documents, the following terms have the meanings indicated which are applicable to both the singular and plural forms:

1.1 Agreement – This written Agreement between the City and the Contractor covering the work to be performed including other Contract Documents that are attached to or incorporated in the Agreement.

1.2 Application for Payment – The form accepted by the City which is to be used by the Contractor in requesting progress or final payment and which is to include such supporting documentation as is required by the Contract Documents.

1.3 Approve – The word approve is defined to mean review of the material, equipment or methods for general compliance with design concepts and with the information given in the Contract Documents. It does not imply a responsibility on the part of the City to verify in every detail conformance with plans and specifications.

1.4 Bid – The offer or Bid of the Contractor submitted on the prescribed form setting forth the total prices for the Work to be performed.

1.5 Bid Documents – Advertisement for Invitation to Bids, the Instructions to Bidders, the Bid Form (with supplemental affidavits and sample agreements), the Contract Forms, General Conditions, the Supplementary Conditions, the Specifications, and the Plans, which documents all become an integral part of the Contract Documents.

1.6 Certificate of Substantial Completion - Certificate provided by the City certifying that all Work, excluding the punch list items, has been completed, inspected, and accepted by the City.

1.7 Change Order – A change order is defined as a written order to the Contractor approved by the City, authorizing a revision of an underlying agreement between the City and the Contractor that is directly related to the original scope of work or an adjustment in the original contract price or the contract time directly related to the original scope of work, issued on or after the effective date of the contract.

1.8 City – The City of Fort Lauderdale, Florida, including but not limited to its employees, agents, officials, representatives, contractors, subcontractors, volunteers, successors and assigns, with whom the Contractor has entered into the Agreement and for whom the Work is to be provided.

1.9 Contract Documents – The Contract Documents shall consist of this Agreement, Exhibits to this Agreement, Public Construction Bond, Performance Bond, Payment Bond and Certificates of Insurance, Notice of Award and Notice to Proceed, General Conditions, Special Conditions, Technical Specifications, Plans/Drawings, Addenda, Bid Form and supplement Affidavits and Agreements, all applicable provisions of State and Federal Law and any modification, including Change Orders or written amendments duly delivered after execution of Agreement, Invitation to Bid, Instructions to Bidders and Bid Bond, Contractor's response to the City's Invitation to Bid, Schedule of Completion, Schedule of Values, all amendments, modifications and supplements, work directive changes issued on or after the Effective Date of the Agreement, as well as any additional documents that are required to be submitted under the Agreement.

Permits on file with the City and or those permits to be obtained shall be considered directive in nature and will be considered a part of this Agreement. A copy of all permits shall be given to the City for inclusion in the Contract Documents. Terms of permits shall be met prior to acceptance of the Work and release of the final payment.

1.10 Contract Price – The monies payable to the Contractor by the City under the Contract Documents and in accordance with the line item unit prices listed in the Bid..

1.11 Contract Time – The number of calendar days stated in the Agreement for the completion of the Work. The dates on which the work shall be started and shall be completed as stated in the Notice to Proceed.

1.12 Contractor – The person, firm, company, or corporation with whom the City has entered into the Agreement, including but not limited to its employees, agents, representatives, contractors, subcontractors, their subcontractors and their other successors and assigns.

1.13 Day – A calendar day of twenty-four (24) hours ending at midnight.

1.14 Defective – When modifying the word "Work" refers to work that is unsatisfactory, faulty, or deficient, or does not conform to the Contract Documents or does not meet the requirements of any inspection, test or approval referred to in the Contract Documents, or has been damaged prior to the Project Manager's recommendation of final payment.

1.15 Effective Date of the Agreement – The effective date of the Agreement shall be the date the Contract is executed by the Parties. The Contractor shall provide all required payment and performance bonds and insurances to the City within ten (10) calendar days following the City Commission approval. Upon verification of all bonds and insurances, the City will issue a notice to proceed (NTP) to the Contractor.

1.16 Final Completion Date – The date the Work is completed, including completion of the final punch list, and delivered along with those items specified in the Contract Documents and is accepted by the City.

1.17 Hazardous Materials (HAZMAT) – Any solid, liquid, or gaseous material that is toxic, flammable, radioactive, corrosive, chemically reactive, or unstable upon prolonged storage in quantities that could pose a threat to life, property, or the environment defined in Section 101(14) of Comprehensive Environmental Response, Compensation and Liability Act of 1980 and in 40 CFR 300.6. Also defined by 49 CFR 171.8 as a substance or material designated by the Secretary of Transportation to be capable of posing an unreasonable risk to health, safety, and property when transported in commerce and which has been so designated.

1.18 Hazardous Substance – As defined by Section 101(14) of the Comprehensive Environmental Response, Compensation and Liability Act; any substance designated pursuant to Section 311(b) (2) (A) of the Clean Water Act; any element, compound, mixture, solution or substance designated pursuant to Section 102 identified under or listed pursuant to Section 3001 of the Solid Waste Disposal Act {but not including any waste listed under Section 307[a] of the Clean Water Act}; any hazardous air pollutant listed under Section 112 of the Clean Air Act; and any imminently hazardous chemical substance or mixture pursuant to Section 7 of the Toxic Substances Control Act. The term does not include petroleum, including crude oil or any fraction thereof, which is not otherwise specifically listed or designated as a hazardous substance in the first sentence of this paragraph, and the term does not include natural gas, natural gas liquids, liquefied natural gas, or synthetic gas usable for fuel (or mixtures of natural gas and such synthetic gas).

1.19 Hazardous Waste – Those solid wastes designated by OSHA in accordance with 40 CFR 261 due to the properties of ignitability, corrosivity, reactivity, or toxicity. Any material that is subject to the Hazardous Waste Manifest requirements of the EPA specified in 40 CFR Part 262.

1.20 Holidays – Those designated non-workdays as established by the City Commission of the City of Fort Lauderdale.

1.21 Inspection – The term "inspection" and the act of inspecting as used in this Agreement is defined to mean the examination of construction to ensure that it conforms to the design concept expressed in the plans and specifications. This term shall not be construed to mean supervision, superintending and/or overseeing.

1.22 Notice of Award – The written notice by City to the Contractor stating that upon compliance by the Contractor with the condition precedent enumerated therein, within the time specified that the City will sign and deliver this Agreement.

1.23 Notice to Proceed – A written notice given by the City to the Contractor fixing the date on which the Contract Time will commence to run. Contractor will immediately commence work upon receipt of the Notice to Proceed.

1.24 Plans – The drawings which show the character and scope of the work to be performed and which have been prepared or approved by the City and/or are referred to in the Contract Documents.

1.25 Premises (otherwise known as Site or Work Site) – means the land, buildings, facilities, etc. upon which the Work is to be performed.

1.26 Project – The total construction of the Work to be provided as defined in the Contract Documents.

1.27 Project Manager – The employee of the City, or other designated individual who is herein referred to as the Project Manager, will assume all duties and responsibilities and will have the rights and authorities assigned to the Project Manager in the contract Documents in connection with completion of the Work in accordance with this Agreement. The Project Manager, or designee, shall be the authorized agent for the City unless otherwise specified.

1.28 Punch List – The City's list of Work yet to be done or be corrected by the Contractor, before the Final Completion date can be determined by the City.

1.29 Record Documents – A complete set of all specifications, drawings, addenda, modifications, shop drawings, submittals and samples annotated to show all changes made during the construction process.

1.30 Record Drawings or "As-Builts" – A set of drawings which show significant changes in the work made during construction and which are usually based on drawings marked up in the field and other data furnished by the Contractor. These documents will be signed and sealed by a Professional Engineer or a Professional Land Surveyor licensed in the State of Florida and employed by the Contractor at no cost to the City.

1.31 Substantially Completed Date – A date when the Contractor has requested in writing, stating that the Work is substantially completed and is ready for an inspection and issuance of a final punch list for the Project. If, at the time of inspection, it is determined the project is substantially completed, the City will issue a letter of Substantial Completion along with a punch list of incomplete or deficient items to be completed prior to requesting a Final Completion inspection.

1.32 Work – The entire completed delivered product or the various separately identifiable parts thereof required to be furnished under the Contract Documents. Work is the result of performing services, furnishing labor and furnishing and incorporating material and equipment into the product, all as required by the Contract Documents.

ARTICLE 2 – SCOPE OF WORK

2.1 The Contractor shall complete all work as specified or indicated in the Contract Documents. The Project for which the Work under the Contract Documents may be the whole or only part is generally described as follows:

LAS OLAS ISLES UNDERGROUNDING OF OVERHEAD UTILITIES
ITB 12453-613 PROJECT 11715

2.2 All Work for the Project shall be constructed in accordance with the approved plans and Specifications. The Work generally involves:

PROJECT DESCRIPTION

This Project is located in an area known as "Las Olas Isles" (Area B). It is by Las Olas Boulevard on the North, New River on the South, Isles of Palm Drive on the East and Mola Avenue to the West, in the City of Fort Lauderdale. The Work to be accomplished under this Agreement includes, but is not limited to, furnishing all labor, materials, equipment, tools, accessories, etc. and performing all related work such that overhead utilities belonging to Florida Power & Light (FPL), Comcast, AT&T, and any other utility could be undergrounded. It includes, but is not limited to, the installation of conduits, utility underground lines, hand holes, cable pull boxes, concrete transformer pads, pad mounted transformers, pad mounted switches, pad-mounted capacitors, and various other utility equipment and devices.

Other work includes:

1) Installation of conduits and connections to provide single phase power supply for each property.
2) Miling, resurfacing and thermostriping of all streets where underground work has been performed.
3) Landscaping, primarily around the cabinets, transformers and as directed.
4) Concrete curbin (D Curb).
5) All restoration according to the standards of the entities having jurisdiction over that work.

All Work is to be performed strictly in accordance with the plans and Contract Documents.

2.3 Within ten (10) days of the execution of this Agreement, the Contractor shall submit a Construction Schedule, Schedule of Values and a listing of all personnel employed. The general sequence of the Work shall be submitted by the Contractor and approved by the City before any work commences. The City reserves the right to issue construction directives necessary to facilitate the Work or to minimize any conflict with operations.

ARTICLE 3 – PROJECT MANAGER

3.1 The Project Manager is hereby designated by the City as **Don Gentile**, whose address is 100 North Andrews Avenue, 4th Floor, Fort Lauderdale, FL 33301, telephone number: **(954) 828-5071**, and email address is dgentile@fortlauderdale.gov. The Project Manager will assume all duties and responsibilities and will have the rights and authorities assigned to the Project Manager in the Contract Documents in connection with completion of the Work in accordance with this Agreement.

ARTICLE 4 – CONTRACT DOCUMENTS

The Contract Documents which comprise the entire Agreement between the City and Contractor are incorporated herein and attached to this Agreement, and consist of the following:

4.1 This Agreement.

4.2 Exhibits to this Agreement: (Plans sheets [**1**] to [**50**] inclusive).

4.3 Public Construction Bond, Performance Bond, Payment Bond and Certificates of Insurance.

4.4 Notice of Award and Notice to Proceed.

4.5 General Conditions as amended by the Special Conditions.

4.6 Technical Specifications.

4.7 Plans/Drawings.

4.8 Addenda number N/A through N/A, inclusive.

4.9 Bid Form and supplement Affidavits and Agreements.

4.10 All applicable provisions of State and Federal Law.

4.11 Invitation to Bid No. 12453-613, Instructions to Bidders, and Bid Bond.

4.12 Contractor's response to the City's Invitation to Bid No. 12453-613, dated October 30, 2020.

4.13 Schedule of Completion.

4.14 All amendments, modifications and supplements, change orders and work directive changes, issued on or after the Effective Date of the Agreement.

4.15 Any additional documents that are required to be submitted under the Agreement.

4.16 Permits on file with the City and or those permits to be obtained shall be considered directive in nature and will be considered a part of this Agreement.

In the event of any conflict between the documents or any ambiguity or missing specification or instruction, the following priority is established:

a. Agreement.

b. Approved change orders, addenda or amendments.

c. Specifications (quality) and Drawings (location and quantity).

d. Supplemental conditions or special terms.

e. General Terms and Conditions.

f. This Agreement dated December 21, 2021, and any attachments.

g. Invitation to Bid No.12453-613, and the specifications prepared by the City.

h. Contractor's response to the City's Invitation to Bid No.12453-613, dated October 30, 2020.

i. Schedule of Values.

j. Schedule of Completion.

If during the performance of the Work, Contractor finds a conflict, error or discrepancy in the Contract Documents, Contractor shall so report to the Project Manager, in writing, within five (5) calendar days, and before proceeding with the Work affected shall obtain a written interpretation or clarification from the City.

Any Work that may reasonably be inferred from the specifications or plans as being required to produce the intended result shall be supplied whether or not it is specifically called for. When words which have a well-known technical or trade meaning are used to describe Work, materials, or equipment, such works shall be interpreted in accordance with such meaning. Reference to standard specifications, manuals or codes of any technical society, organization or associations, or to the code of any governmental authority whether such reference be specific or implied, shall mean the latest standard specification, manual or code in effect as of the Effective Date of this Agreement, except as may be otherwise specifically stated. However, no provision of any referenced standard specification, manual or code (whether or not specifically incorporated by reference in the Contract Documents) shall change the duties and responsibilities of the City, the Contractor, or any of their agents or employees from those set forth in the Contract Documents.

ARTICLE 5 – CONTRACT TIME

5.1 The Contractor recognizes that **TIME IS OF THE ESSENCE**. The Work shall commence within 30 calendar days of the date of the Notice to Proceed.

5.2 The Work shall be Substantially Completed within 180 calendar days after the date the Notice to Proceed is issued.

ARTICLE 6 – CONTRACT PRICE

6.1 City shall pay Contractor for performance of the Work in accordance with Article 7, subject to additions and deletions by Change Order, as provided for in this Agreement.

6.2 The Parties expressly agree that the Contract Price, which shall not exceed the amount of **$4,733,400**, constitutes the total maximum compensation payable to Contractor for performing the Work, plus any Work done pursuant to a Change Order. The Contract Price is in accordance with the line item unit prices listed in the Bid. Line items are based on a unit price cost multiplied by a defined quantity. Any additional duties, responsibilities and obligations assigned to or

undertaken by Contractor shall be at Contractor's expense without change to the Contract Price.

6.3 The Contract Price constitutes the compensation payable to Contractor for performing the Work plus any Work done pursuant to a Change Order. All duties, responsibilities and obligations assigned to or undertaken by Contractor shall be at Contractor's expense without change in the Contract price.

ARTICLE 7 – PAYMENT

7.1 Contractor shall submit Applications for Payment in accordance with the Contract Documents. Applications for Payment will be processed by City as provided for in the General Conditions.

7.2 Progress Payments. City shall make progress payments on account of the Contract Price on the basis of Contractor's monthly Applications for Payment, which shall be submitted by the Contractor between the first (1st) and the tenth (10th) day after the end of each calendar month for which payment is requested. All progress payments will be made on the basis of the progress of the Work completed.

7.3 Prior to Final Completion, progress payments will be made in an amount equal to ninety percent (90%) of the value of Work completed less in each case the aggregate of payments previously made.

7.4 Final Payment. Upon final completion of the Work in accordance with the General Conditions, as may be supplemented, the City shall pay Contractor an amount sufficient to increase total payments to one hundred percent (100%) of the Contract Price. However, not less than ten percent (10%) of the Contract Price shall be retained until Record Drawings (as-builts), specifications, addenda, modifications and shop drawings, including all manufacturers' instructional and parts manuals are delivered to and accepted by the City.

7.5 City may withhold, in whole or in part, payment to such extent as may be necessary to protect itself from loss on account of:

7.5.1 Defective work not remedied.
7.5.2 Claims filed or reasonable evidence indicating probable filing of claims by other parties against Contractor or City because of Contractor's performance.
7.5.3 Failure of Contractor to make payments properly to subcontractors or for material or labor.
7.5.4 Damage to another contractor not remedied.
7.5.5 Liquidated damages and costs incurred by Contractor for extended construction administration, if applicable.
7.5.6 Failure of Contractor to provide any and all documents required by the Contract Documents.

When the above grounds are removed or resolved satisfactory to the Project Manager, payment shall be made in whole or in part.

7.6 The City shall make payment to the Contractor in accordance with the Florida Prompt Payment Act, Section 218.70, Florida Statutes (2020), as amended or revised, provided, however, complete and error free pay application is submitted.

7.7 The City shall make payment to the Contractor through utilization of the City's P-Card Program. The City has implemented a Purchasing Card (P-Card) Program utilizing the MASTERCARD and VISA networks. Purchases from this contract will be made utilizing the City's Purchasing Card. Contractor will receive payment from the purchasing card in the same manner as other credit card purchases. Accordingly, Contractor must presently have the ability to accept these credit cards or take whatever steps necessary to implement the ability before the start of the contract term, or contract award by the City. All costs associated with the Contractor's participation in this purchasing program shall be borne by the Contractor. The City reserves the right to revise this program as necessary.

7.8 Payment Card Industry (PCI) Compliance:

Contractor agrees to comply with all applicable state, federal and international laws, as well as industry best practices, governing the collection, access, use, disclosure, safeguarding and destruction of Protected Information.

Contractor and/or any subcontractor that handles credit card data must be, and remain, PCI compliant under the current standards and will provide documentation confirming compliance upon request by the City, failure to produce documentation could result in termination of the Agreement.

ARTICLE 8 – CONTRACTOR'S REPRESENTATIONS

In order to induce the City to enter into this Agreement, Contractor makes the following representations upon which the City has relied:

8.1 Contractor is qualified in the field of public construction and in particular to perform the Work and services set forth in this Agreement.

8.2 Contractor has visited the Work Site, has conducted extensive tests, examinations and investigations and represents and warrants a thorough familiarization with the nature and extent of the Contract Documents, the Work, locality, soil conditions, water table condition, moisture conditions and all year-round local weather and climate conditions (past and present), and examination and investigations conducted by Contractor and the Contractor's experts, has determined that no conditions exist that would in any manner affect the Proposed Price and that the project can be completed for the Proposed Price submitted within the Contract Time as defined in this Agreement. Furthermore, Contractor warrants and confirms that it is totally familiar with, understands and obligates

Contractor to comply with all federal, state and local laws, ordinances, rules, regulations and all market conditions that affect or may affect the cost and price of materials and labor needed to fulfill all provisions of this Agreement or that in any manner may affect cost, progress or performance of the Work.

8.3 The Contractor has satisfied itself as to the nature and location of the Work under the Contract Documents, the general and local conditions of the Project, particularly those bearing upon availability of transportation, disposal, handling and storage of materials, availability of labor, water, electric power, and roads, the conformation and conditions at the ground based on City provided reports, the type of equipment and facilities needed preliminary to and during the prosecution of the Work and all other matters which can in any way affect the Work or the cost thereof under the Contract Documents.

8.4 The Contractor has also studied on its own, subsurface and latent physical conditions at the site or otherwise affecting cost, progress or performance of the Works, and finds and has further determined that no conditions exist that would in any manner affect the Proposed Price and that the Project can be completed for the Proposed Price submitted.

8.5 Contractor has made or caused to be made examinations, investigations, tests and studies of such reports and related data in addition to those referred to in Paragraphs 8.2, 8.3 and 8.4 above as it deems necessary for the performance of the Work at the Contract Prices, within the Contract Time and in accordance with the other terms and conditions of the Contract Documents; and no additional examinations, investigations, tests, reports or similar data are, or will be, required by Contractor for such purposes.

8.6 Contractor has correlated the results of all such observations, examinations, investigations, tests, reports and data with the terms and conditions of the Contract Documents.

8.7 Contractor has given City written notice of all conflicts, errors or discrepancies that it has discovered in the Contract Documents and the written resolution by City is acceptable to the Contractor.

8.8 Labor:

8.8.1 The Contractor shall provide competent, suitable qualified personnel to survey and lay out the Work and perform construction as required by the Contract Documents. The Contractor shall at all times maintain good discipline and order at the site.

8.8.2 The Contractor shall, at all times, have a competent superintendent, capable of reading and thoroughly understanding the drawings and specifications, as the Contractor's agent on the Work, who shall, as the Contractor's agent, supervise, direct and otherwise conduct the Work.

8.8.3 The Contractor shall designate the superintendent on the job to the City, in writing, immediately after receipt of the Notice to Proceed. The Contractor understands and agrees that the superintendent's physical presence on the job site is indispensable to the successful completion of the Work. If the superintendent is frequently absent from the job site, the Project Manager may deliver written notice to the Contractor to stop work or terminate the Agreement in accordance with Article 17.

8.8.4 The Contractor shall assign personnel to the job site that have successfully completed training programs related to trench safety, confined space and maintenance of traffic (MOT). A certified "competent person" shall be assigned to the job site. Personnel certified by the International Municipal Signal Associations with Florida Department of Transportation qualifications are required relative to MOT. Failure to pursue the Work with the properly certified supervisory staff may result in notice to stop work or terminate the Agreement in accordance with Article 17.

8.9 Materials:

8.9.1 Where the material and equipment is not supplied by the utility companies (FPL, AT&T and Comcast), the Contractor shall furnish all materials, equipment, labor, transportation, construction equipment, machinery, tools, appliances, fuel, power, light, heat, telephone, water and sanitary facilities and all other facilities and incidentals necessary for the execution, testing, initial operation and completion of Work.

8.9.2 All materials and equipment shall be of good quality and new, except as otherwise provided in the Contract Documents. Suppliers shall be selected and paid by the Contractor; the City reserves the right to approve all suppliers and materials.

8.10 Work Hours: Except in connection with the safety or protection of persons, or the Work, or property at the site or adjacent thereto, and except as otherwise indicated in the Supplementary Conditions, all work at the site shall be performed during regular working hours between 8 a.m. and 5:00 p.m., Monday through Friday.

Unless approved by the City in advance, the Contractor will not perform work on Saturday, Sunday or any legal holiday (designated by the City of Fort Lauderdale) without the Project Manager's written consent at least seventy-two (72) hours in advance of starting such work. For any overtime inspection required

by City personnel, the Contractor shall pay for the additional charges to the City with respect to such overtime work. Such additional charges shall be a subsidiary obligation of the Contractor and no extra payment shall be made to the Contractor for overtime work. **It shall be noted that the City's Inspector work hours are from 8:00 a.m. to 4:30 p.m., Monday through Friday, and any work requiring inspection oversight being performed outside of this timeframe shall be paid for by the Contractor as Inspector overtime at a rate of $174.00 per hour.** The cost to the Contractor to reimburse the City for overtime inspection is established at direct-labor and overtime costs for each person or inspector required. Incidental overtime costs for engineering, testing and other related services will also be charged to the Contractor at the actual rate accrued.

8.11 Patent Fee and Royalties: The Contractor shall pay all license fees and royalties and assume all costs incident to the use in the performance of the Work or the incorporation in the Work, or any invention, design, process, product or device which is the subject of patent rights or copyrights held by others. The Contractor hereby expressly binds himself or itself to indemnify and hold harmless the City from all such claims and fees and from any and all suits and action of every name and description that may be brought against City on account of any such claims, fees, royalties, or costs for any such invention or patent, and from any and all suits or actions that may be brought against said City for the infringement of any and all patents or patent rights claimed by any person, firm corporation or other entity.

8.12 Permits: The Contractor shall obtain and pay for all permits and licenses. There shall be no allowance for Contractor markup, overhead or profit for permits and licenses.

The Contractor shall pay all government charges which are applicable at the time of opening of proposals. It shall be the responsibility of the Contractor to secure and pay for all necessary licenses and permits of a temporary nature necessary for the prosecution of Work.

8.13 Law and Regulations: The Contractor shall give all notices and comply with all laws, ordinances, rules and regulations applicable to the Work. If the Contractor observes that the specifications or plans are in conflict, the Contractor shall give the Project Manager prompt written notice thereof within five (5) calendar days, and any necessary changes shall be adjusted by any appropriate modifications. If the Contractor performs any work knowing or having reason to know that it is contrary to such laws, ordinances, rules, standards, specifications and regulations, and without such notice to the Project Manager, the Contractor shall bear all costs arising therefrom.

8.14 Taxes: The Contractor shall pay all sales, consumer, use and other similar taxes required to be paid by him in accordance with the laws of the City of Fort Lauderdale, County of Broward, and the State of Florida.

8.15 Contractor Use of Premises: The Contractor shall confine construction equipment, the storage of materials and equipment and the operations of workmen to areas permitted by law, ordinances, permits and/or the requirements of the Contract Documents and shall not unreasonably encumber the premises with construction equipment or other materials or equipment.

The Contractor shall not enter upon private property for any purpose without first securing the permission of the property owner in writing and furnishing the Project Manager with a copy of said permission. This requirement will be strictly enforced, particularly with regard to such vacant properties as may be utilized for storage or staging by the Contractor.

The Contractor shall conduct its work in such a manner as to avoid damage to adjacent private or public property. Any damage to existing structures of work of any kind, including permanent reference markers or property corner markers, or the interruption of a utility service, shall be repaired or restored promptly at no expense to the City or property owner.

The Contractor will preserve and protect all existing vegetation such as trees, shrubs and grass on or adjacent to the site which do not reasonably interfere with the construction, as determined by the Project Manager. The Contractor will be responsible for repairing or replacing any trees, shrubs, lawns and landscaping that may be damaged due to careless operation of equipment, stockpiling of materials, tracking of grass by equipment or other construction activity. The Contractor will be liable for or will be required to replace or restore at no expense to the City all properties and areas not protected or preserved as required herein that may be destroyed or damaged.

During the progress of the Work, the Contractor shall keep the premises free from accumulation of waste materials, rubbish and debris resulting from the Work. At the completion of the Work, the Contractor shall remove all waste materials, rubbish and debris from and about the premises as well as all tools, appliances, construction equipment and machinery, and surplus materials and shall leave the site clean and ready for occupancy by the City. The Contractor shall restore to their original condition those portions of the site not designated for alteration by the Contract Documents at no cost to the City.

8.16 Project Coordination: The Contractor shall provide for the complete coordination of the construction effort. This shall include, but not necessarily be limited to, coordination of the following:

8.16.1 Flow of material and equipment from suppliers.

8.16.2 The interrelated work with affected utility companies.
8.16.3 The interrelated work with the City where tie-ins to existing facilities are required.
8.16.4 The effort of independent testing agencies.
8.16.5 Notice to affected property owners as may be directed by the Project Manager.
8.16.6 Coordination with and scheduling of all required inspections from all permitting agencies.

8.17 Project Record Documents and Final As-Builts (Record Drawings): Contractor shall be responsible for maintaining up-to-date redline as-built drawings, on site, at all times during construction. All as-built information shall be surveyed and verified by a professional land surveyor registered in the State of Florida. Contractor shall provide the City with a minimum of three (3) sets of signed and sealed record drawings (Final As-Builts) and a CD of the electronic drawings files created in AutoCad 2014 or later. All costs associated with survey work required for construction layout and as-built preparation shall be the responsibility of the Contractor.

8.18 Safety and Protection:

8.18.1 The Contractor shall be responsible for initiating, maintaining and supervising all safety precautions and programs in connection with the Work. The Contractor shall take all necessary precautions for the safety of, and shall provide the necessary protection to prevent damage, injury or loss to:

8.18.1.1 All employees working on the project and other persons who may be affected thereby.
8.18.1.2 All the Work and all materials or equipment to be incorporated therein, whether in storage on or off the site.
8.18.1.3 Other property at the site or adjacent thereto, including trees, shrubs, lawns, walks, pavements, roadways, structures and utilities not designated for removal, relocation or replacement in the course of construction.

8.18.2 The Contractor shall comply with all applicable laws, ordinances, rules, regulations and orders of any public body having jurisdiction for the safety of persons or property or to protect them from damage, injury or loss; and shall erect and maintain all necessary safeguards for such safety and protection. The Contractor shall notify owners of adjacent property and utilities when execution of the Work may affect them at least seventy-two (72) hours in advance (unless otherwise required). All damage, injury or loss to any property caused, directly or indirectly, in whole or in part by the Contractor, any subcontractor or anyone directly or indirectly employed by any of them or anyone for whose acts any of them may be liable, shall be

remedied by the Contractor. The Contractor's duties and responsibilities for safety and protection of the Work shall continue until such time as all the Work is completed and accepted by the City.

8.19 Emergencies: In emergencies affecting the safety or protection of persons or the Work or property at the site or adjacent thereto, the Contractor, without special instruction or authorization from the City is obligated to act to prevent threatened damage, injury or loss. The Contractor shall give the Project Manager prompt written notice of any significant changes in the Work or deviations from the Contract Documents caused thereby.

8.20 Risk of Loss: The risk of loss, injury or destruction shall be on the Contractor until acceptance of the Work by the City. Title to the Work shall pass to the City upon acceptance of the Work by the City.

8.21 Environmental: The Contractor has fully inspected the Premises and agrees, except as to the presence of any asbestos, to accept the Premises in an "as is" physical condition, without representation or warranty by the City of any kind, including, without limitation, any and all existing environmental claims or obligations that may arise from the presence of any "contamination" on, in or about the Premises. Further, Contractor and all entitles claiming by, through or under the Contractor, releases and discharges the City, from any claim, demand, or cause of action arising out of or relating to the Contractor's use, handling, storage, release, discharge, treatment, removal, transport, decontamination, cleanup, disposal and/or presence of any hazardous substances including asbestos on, under, from or about the Premises. The Contractor shall have no liability for any pre-existing claims or "contamination" on the Premises.

The Contractor shall not use, handle, store, discharge, treat, remove, transport, or dispose of Hazardous Substances including asbestos at, in, upon, under, to or from the Premises until receipt of instructions from the City. At such time, a City approved Change Order, which shall not include any profit, shall authorize the Contractor to perform such services.

The Contractor shall immediately deliver to the Project Manager complete copies of all notices, demands, or other communications received by the Contractor from any governmental or quasi-governmental authority or any insurance company or board of fire underwriters or like or similar entities regarding in any way alleged violations or potential violations of any Environmental Law or otherwise asserting the existence or potential existence of any condition or activity on the Premises which is or could be dangerous to life, limb, property, or the environment.

For other and additional consideration, the Contractor hereby agrees, at its sole cost and expense, to indemnify and protect, defend, and hold harmless the City and its respective employees, agents, officials, officers, representatives,

contractors and subcontractors, successors, and assigns from and against any and all claims, demands, losses, damages, costs, expenses, including but not limited to mitigation, restoration, and natural restoration expenses, liabilities, assessments, fines, penalties charges, administrative and judicial proceedings and orders, judgments, causes of action, in law or in equity, remedial action requirements and/or enforcement actions of any kind (including, without limitation, attorneys' fees and costs) directly or indirectly arising out of or attributable to, in whole or in part, the Contractor's use, handling, storage, release, threatened release, discharge, treatment, removal, transport, decontamination, cleanup, disposal and/or presence of a Hazardous Substance (excluding asbestos) on, under, from, to or about the Premises or any other activity carried on or undertaken on or off the Premises by the Contractor or its employees, agents or subcontractors, in connection with the use, handling, storage, release, threatened release, discharge, treatment, mitigation, natural resource restoration, removal, transport, decontamination, cleanup, disposal and/or presence or any Hazardous Substance including asbestos located, transported, or present on, undue, from, to, or about the Premises. This indemnity is intended to be operable under 42 U.S.C. Section 9607, as amended or revised, and any successor section.

The scope of the indemnity obligations includes, but is not limited to: (a) all consequential damages; (b) the cost of any required or necessary repair, cleanup, or detoxification of the applicable real estate and the preparation and implementation of any closure, remedial or other required plan, including without limitation; (i) the costs of removal or remedial action incurred by the United States government or the State of Florida or response costs incurred by any other person, or damages from injury to destruction of, or loss of, natural resources, including the cost of assessing such injury, destruction, or loss, incurred pursuant to the Comprehensive Environmental Response, Compensation and Liability Act, as amended; (ii) the clean-up costs, fines, damages, or penalties incurred pursuant to any applicable provisions of Florida law; and (iii) the cost and expenses of abatement, correction or cleanup, fines, damages, response costs, or penalties which arise from the provisions of any other statute, law, regulation, code ordinance, or legal requirement state or federal; and (c) liability for personal injury or property damage arising under any statutory or common law tort theory, including damages assessed for the maintenance of a public private nuisance, response costs, or for the carrying on of an abnormally dangerous activity.

8.22 No Extended Damages: For other and additional good and valuable consideration the receipt and sufficiency of which is hereby acknowledged, the Contractor covenants and agrees that in the event of any delay of construction or for any other reason or allegation or claim, and notwithstanding the reason of the delay, reason, claim or allegation or who caused them or the construction delay

or whether they were caused by the City, that there will be no entitlement to Contractor to or for any direct or indirect financial damages or losses for extended corporate overhead impact, extended project overhead impacts, project support services, mobilization or demobilization or by whatever other label or legal concept or theory and types of names or labels or basis such claims may have, or any business damages or losses of whatever type or nature, and Contractor hereby waives any right to make any such claim or claims. This provision will have application and effect when construction delays are anticipated and agreed upon by both the City and the Contractor.

8.23 No Liens: If any subcontractor, supplier, laborer, or materialmen of Contractor or any other person directly or indirectly acting for or through Contractor files or attempts to file a mechanic's or construction lien against the real property on which the Work is performed or any part or against any personal property or improvements or claim against any monies due or to become due from the City to Contractor or from Contractor to a subcontractor, for or on account of any work, labor, services, material, equipment, or other items furnished in connection with the Work or any Change Order, Contractor agrees to satisfy, remove, or discharge such lien or claim at its own expense by bond, payment, or otherwise within twenty (20) days of the filing or from receipt of written notice from the City.

Additionally, until such time as such lien or claim is satisfied, removed or discharged by Contractor, all monies due to Contractor, or that become due to Contractor before the lien or claim is satisfied, removed or otherwise discharged, shall be held by City as security for the satisfaction, removal and discharge of such lien and any expense that may be incurred while obtaining such. If Contractor shall fail to do so, City shall have the right, in addition to all other rights and remedies provided by this Agreement or by law, to satisfy, remove, or discharge such lien or claim by whatever means City chooses at the entire and sole cost and expense of Contractor which costs and expenses shall, without limitation, include attorney's fees, litigation costs, fees and expenses and all court costs and assessments.

8.24 Weather Emergencies: Upon issuance of a hurricane watch by the National Weather Service, the Contractor shall submit to the City a plan to secure the work area in the event a hurricane warning is issued. The plan shall detail how the Contractor will secure the Premises, equipment and materials in a manner as to prevent damage to the Work and prevent materials and equipment from becoming a hazard to persons and property on and around the Premises. The plan shall include a time schedule required to accomplish the hurricane preparations and a list of emergency contacts that will be available and in the City before, during and immediately after the storm.

Upon issuance of a hurricane warning by the National Weather Service, if the Contractor has not already done so, the Contractor shall implement its hurricane preparedness plan. Cost of development and implementation of the hurricane

preparedness plan shall be considered as incidental to construction. Cost of any clean up and rework required after the storm will be considered normal construction risk within Florida and shall not entitle the Contractor to any additional compensation. Contractor shall be entitled to request an extension in time for completion of the Work, in accordance with the provisions of Article 15 of this Agreement, equal to the time it is shut down for implementation of the preparedness plan, the duration of the storm and a reasonable period to restore the Premises.

8.25 Force Majeure: No Party shall hold the other responsible for damages or for delays in performance caused by force majeure, acts of God, or other acts or circumstances beyond the control of the other party or that could not have been reasonably foreseen and prevented. For this purpose, such acts or circumstances shall include, but not be limited to weather conditions affecting performance, floods, epidemics, pandemics, war, act of Governmental Authority, state of emergency, war, riots, strikes, lockouts, or other industrial disturbances, or protest demonstrations. Should such acts or circumstances occur, the parties shall use their best efforts to overcome the difficulties arising therefrom and to resume the Work as soon as reasonably possible with the normal pursuit of the Work.

Inclement weather, continuous rain for less than three (3) days or the acts or omissions of subcontractors, third-party contractors, materialmen, suppliers, or their subcontractors, shall not be considered acts of force majeure.

No Party shall be liable for its failure to carry out its obligations under the Agreement during a period when such Party is rendered unable by force majeure to carry out its obligation, but the obligation of the Party or Parties relying on such force majeure shall be suspended only during the continuance of the inability and for no longer period than the unexpected or uncontrollable event.

The Contractor further agrees and stipulates, that its right to excuse its failure to perform by reason of force majeure shall be conditioned upon giving written notice of its assertion that a Force Majeure delay has commenced within 96 hours after such an occurrence. The Contractor shall use its reasonable efforts to minimize such delays. The Contractor shall promptly provide an estimate of the anticipated additional time required to complete the Project.

8.26 Participation by Disadvantaged Business Enterprises in Department of Transportation Financial Assisted Contracts: The recipient shall not discriminate on the basis of race, color, national origin, or sex in the award and performance of any DOT-assisted contract or in the administration of its DBE program or the requirements of 49 CFR Part 26. The recipient shall take all necessary and reasonable steps under 49 CFR Part 26 to ensure nondiscrimination in the award and administration of DOT-assisted contracts. The recipient's DBE program, as

required by 49 CFR Part 26 and as approved by DOT, is incorporated by reference in this Agreement. Implementation of this program is a legal obligation and failure to carry out its terms shall be treated as a violation of this Agreement. Upon notification to the recipient of its failure to carry out its approved program, the Department may impose sanctions as provided for under part 26 and may, in appropriate cases, refer the matter for enforcement under 18 U.S.C. 1001 and/or the Program Fraud Civil Remedies Act of 1986 (31 U.S.C. 3801 *et seq.*).

Additionally, the Contractor assures that it, the subrecipient or the subcontractor shall not discriminate on the basis of race, color, national origin, or sex in the performance of this Agreement. The Contractor shall carry out applicable requirements of 49 CFR Part 26 in the award and administration of DOT-assisted contracts. Failure by the Contractor to carry out these requirements is a material breach of this Agreement, which may result in the termination of this Agreement or such other remedy as the recipient deems appropriate. This additional language must be included in each subcontract the prime Contractor signs with a subcontractor.

ARTICLE 9 – CITY'S RESPONSIBILITIES

9.1 The City shall furnish the data required of the City under the Contract Documents promptly and shall make payments to the Contractor promptly after they are due as provided in Article 7.

9.2 The City shall provide public rights-of-way and easement, where available, for the installation of conduits, transformers pads and related appurtenances only.

9.3 Technical Clarifications and Interpretations:

9.3.1 The City shall issue, with reasonable promptness, such written clarifications or interpretations of the Contract Documents as it may determine necessary, which shall be consistent with or reasonably inferable from the overall intent of the Contract Documents. Should the Contractor fail to request interpretation of questionable items in the Contract Documents, the City shall not entertain any excuse for failure to execute the Work in a satisfactory manner.

9.3.2 The City shall interpret and decide matters concerning performance under the requirements of the Contract Documents, and shall make decisions on all claims, disputes or other matters in question. Written notice of each claim, dispute or other matter will be delivered by claimant to the other Party but in no event later than five (5) days after the occurrence of event and written supporting date will be submitted to the other Party within five (5) days after such occurrence. All written decisions of the City on any claim or dispute will be final and binding.

9.4 The Contractor shall perform all Work to the reasonable satisfaction of the City in accordance with the Contract Documents. In cases of disagreement or ambiguity, the City shall decide all questions, difficulties, and disputes of whatever nature, which may arise under or by reason of this Agreement or the quality, amount and value of the Work, and the City's decisions on all claims, questions and determination are final.

9.5 Cancellation For Unappropriated Funds: The obligation of the City for payment to a Contractor is limited to the availability of funds appropriated in a current fiscal period, and continuation of the contract into a subsequent fiscal period is subject to appropriation of funds, unless otherwise authorized by law.

ARTICLE 10 – BONDS AND INSURANCE

10.1 Public Construction and Other Bonds: The Contractor shall furnish Public Construction or Performance and Payment Bonds ("Bond"), each in an amount at least equal to the Contract Price as security for the faithful performance and payment of all the Contractor's obligations under the Contract Documents. These Bonds shall remain in effect until at least one (1) year after the date of final payment, except as otherwise provided by law. All Bonds shall be furnished and provided by the surety and shall be in substantially the same form as prescribed by the Contract Documents and be executed by such sureties as (i) are licensed to conduct business in the State of Florida, and (ii) are named in the current list of Companies Holding Certificates of Authority as Acceptable Sureties on Federal Bonds and as Acceptable Reinsuring Companies as published in Circular 570 (amended) by the Audit Staff Bureau of Accounts, U.S. Treasury Department and (iii) otherwise meet the requirements set forth herein that apply to sureties. All Bonds signed by an agent must be accompanied by a certified copy of the authority to act.

10.1.1 Performance Bond: The Contractor shall execute and record in the public records of Broward County, Florida, a payment and performance bond in an amount at least equal to the Contract Price with a surety insurer authorized to do business in the State of Florida as surety ("Bond"), in accordance with Section 255.05, Florida Statutes (2020), as may be amended or revised, as security for the faithful performance and payment of all of the Contractor's obligations under the Contract Documents.

A Corporate Surety Bond legally issued, meeting the approval of, and running to the City in an amount not less than the Contract Price of such improvements, conditioned that the Contractor shall maintain and make all repairs to the improvements constructed by the Contractor at their own expense and free of charge to the City, for the period of one (1) year after the date of acceptance of the Work within such period by reason of any

imperfection of the material used or by reason of any defective workmanship, or any improper, imperfect or defective preparation of the base upon which any such improvement shall be laid.

10.2 Disqualification of Surety: If the Surety on any Bond furnished by the Contractor is declared bankrupt or becomes insolvent or its right to do business is terminated in the State of Florida or it ceases to meet the requirements of clauses (i) and (ii) of Paragraph 10.1, the Contractor shall within five (5) days thereafter substitute another Bond and Surety, both of which shall be acceptable to the City.

10.3 Insurance:

As a condition precedent to the effectiveness of this Agreement, during the term of this Agreement and during any renewal or extension term of this Agreement, the Contractor, at its sole expense, shall provide insurance of such a type and with such terms and limits as noted below. Providing proof of and maintaining adequate insurance coverage are material obligations of Contractor. The Contractor shall provide the City a certificate of insurance evidencing such coverage. The Contractor's insurance coverage shall be primary insurance for all applicable policies. The limits of coverage under each policy maintained by Contractor shall not be interpreted as limiting the Contractor's liability and obligations under this Agreement. All insurance policies shall be through insurers authorized or eligible to write policies in the State of Florida and possess an A.M. Best rating of A-, VII or better, subject to the approval of the City's Risk Manager.

The coverages, limits and/or endorsements required herein protect the interests of the City, and these coverages, limits and/or endorsements shall in no way be required to be relied upon by the Contractor for assessing the extent or determining appropriate types and limits of coverage to protect the Contractor against any loss exposures, whether as a result of this Agreement or otherwise. The requirements contained herein, as well as the City's review or acknowledgement, is not intended to and shall not in any manner limit or qualify the liabilities and obligations assumed by the Contractor under this Agreement.

The following insurance policies/coverages are required:

Commercial General Liability
Coverage must be afforded under a Commercial General Liability policy with limits not less than:

- $1,000,000 each occurrence and $2,000,000 aggregate for Bodily Injury, Property Damage, and Personal and Advertising Injury
- $1,000,000 each occurrence and $2,000,000 aggregate for Products and Completed Operations

Policy must include coverage for contractual liability and independent contractors.

The City, its officials, employees, and volunteers are to be covered as an additional insured with a CG 20 26 04 13 Additional Insured – Designated Person or Organization Endorsement or similar endorsement providing equal or broader Additional Insured Coverage with respect to liability arising out of activities performed by or on behalf of the Contractor. The coverage shall contain no special limitation on the scope of protection afforded to the City, its officials, employees, or volunteers.

Business Automobile Liability
Coverage must be afforded for all Owned, Hired, Scheduled, and Non-Owned vehicles for Bodily Injury and Property Damage in an amount not less than $1,000,000 combined single limit each accident.

If the Contractor does not own vehicles, the Contractor shall maintain coverage for Hired and Non-Owned Auto Liability, which may be satisfied by way of endorsement to the Commercial General Liability policy or separate Business Auto Liability policy.

Crane and Rigging Liability
Coverage must be afforded for any crane operations under the Commercial General or Business Automobile Liability policy as necessary, in line with the limits of the associated policy.

Workers' Compensation and Employer's Liability
Coverage must be afforded per Chapter 440, Florida Statutes. Any firm performing work on behalf of the City must provide Workers' Compensation insurance. Exceptions and exemptions will be allowed by the City's Risk Manager, if they are in accordance with Florida Statute.

The Contractor waives, and the Contractor shall ensure that the Contractor's insurance carrier waives, all subrogation rights against the City, its officials, employees, and volunteers for all losses or damages. The City requires the policy to be endorsed with WC00 03 13 Waiver of our Right to Recover from Others or equivalent.

The Contractor must be in compliance with all applicable state and federal workers' compensation laws, including the U.S. Longshore and Harbor Workers' Compensation Act or Jones Act, if applicable.

Insurance Certificate Requirements

a. The Contractor shall provide the City with valid Certificates of Insurance (binders are unacceptable) no later than thirty (30) days prior to the start of work contemplated in this Agreement.

b. The Contractor shall provide a Certificate of Insurance to the City with a thirty (30) day notice of cancellation; ten (10) days' notice if cancellation is for nonpayment of premium.
c. In the event that the insurer is unable to accommodate the cancellation notice requirement, it shall be the responsibility of the Contractor to provide the proper notice. Such notification will be in writing by registered mail, return receipt requested, and addressed to the certificate holder.
d. In the event the Agreement term goes beyond the expiration date of the insurance policy, the Contractor shall provide the City with an updated Certificate of Insurance no later than ten (10) days prior to the expiration of the insurance currently in effect. The City reserves the right to suspend the Agreement until this requirement is met.
e. The certificate shall indicate if coverage is provided under a claims-made or occurrence form. If any coverage is provided on a claims-made form, the certificate will show a retroactive date, which should be the same date of the initial contract or prior.
f. The City shall be named as an Additional Insured on all liability policies, with the exception of Workers' Compensation.
g. The City shall be granted a Waiver of Subrogation on the Contractor's Workers' Compensation insurance policy.
h. The Agreement, Bid/Contract number, event dates, or other identifying reference must be listed on the certificate.

The Certificate Holder should read as follows:
City of Fort Lauderdale
100 North Andrews Avenue
Fort Lauderdale, FL 33301

The Contractor has the sole responsibility for all insurance premiums and shall be fully and solely responsible for any costs or expenses as a result of a coverage deductible, co-insurance penalty, or self-insured retention; including any loss not covered because of the operation of such deductible, co-insurance penalty, self-insured retention, or coverage exclusion or limitation. Any costs for adding the City as an Additional Insured shall be at the Contractor's expense.

If the Contractor's primary insurance policy/policies do not meet the minimum requirements, as set forth in this Agreement, the Contractor may provide an Umbrella/Excess insurance policy to comply with this requirement.

The Contractor's insurance coverage shall be primary insurance as respects to the City, its officials, employees, and volunteers. Any insurance or self-insurance maintained by the City, its officials, employees, or volunteers shall be excess of Contractor's insurance and shall be non-contributory.

Any exclusions or provisions in the insurance maintained by the Contractor that excludes coverage for work contemplated in this Agreement shall be deemed unacceptable and shall be considered breach of contract.

All required insurance policies must be maintained until the contract work has been accepted by the City, and/or this Agreement is terminated. Any lapse in coverage shall be considered breach of contract. In addition, Contractor must provide confirmation of coverage renewal via an updated certificate should any policies expire prior to the expiration of this Agreement. The City reserves the right to review, at any time, coverage forms and limits of Contractor's insurance policies.

The Contractor shall provide notice of any and all claims, accidents, and any other occurrences associated with this Agreement to the Contractor's insurance company or companies and the City's Risk Management office, as soon as practical.

It is the Contractor's responsibility to ensure that any and all of the Contractor's independent contractors and subcontractors comply with these insurance requirements. All coverages for independent contractors and subcontractors shall be subject to all of the applicable requirements stated herein. Any and all deficiencies are the responsibility of the Contractor.

NOTE: CITY PROJECT NUMBER, PROJECT NAME AND BID NUMBER MUST APPEAR ON EACH CERTIFICATE, AND THE CITY OF FORT LAUDERDALE MUST BE NAMED ON THE CERTIFICATE AS AN "ADDITIONAL INSURED" ON GENERAL LIABILITY POLICIES.

ARTICLE 11- WARRANTY AND GUARANTEE, TESTS AND INSPECTIONS, CORRECTION, REMOVAL OR ACCEPTANCE OF DEFECTIVE WORK

11.1 Warranty: The Contractor warrants and guarantees to the City that all Work will be in accordance with the Contract Documents and will not be defective. Prompt notice of all defects shall be given to the Contractor. All defective work, whether or not in place, may be rejected, corrected or accepted as provided in this Article.

11.1.1 Warranty of Title: The Contractor warrants to the City that it possesses good, clear and marketable title to all equipment and materials provided and that there are no pending liens, claims or encumbrances against the equipment and materials.

11.1.2 Warranty of Specifications: The Contractor warrants that all equipment, materials and workmanship furnished, whether furnished by the Contractor, its subcontractors or suppliers, will comply with the specifications, drawings and other descriptions supplied or adopted and that all services will be performed in a workmanlike manner.

11.1.3 Warranty of Merchantability: The Contractor warrants that any and all equipment to be supplied pursuant to this Agreement is merchantable, free from defects, whether patent or latent in material or workmanship, and fit for the ordinary purposes for which it is intended.

11.2 Tests and Inspections: Contractor shall retain the services of an independent, certified, testing lab to perform all testing as required by the specifications, contract drawings, and any applicable permitting agency. Contractor shall provide evidence of certification to the City before the work and testing is done. Testing results shall be submitted to the Project Manager for review and approval at the time the results are provided to the Contractor. The Contractor shall give the Project Manager and City Inspector a minimum of twenty-four (24) hours' advanced notice of readiness of the Work for all required inspections, tests, or approvals and shall notify all applicable permitting agencies in a timely manner based on requirements set forth in the permit documents.

11.2.1 Neither observations by the Project Manager nor inspections, tests or approvals by others shall relieve the Contractor from its obligations to perform the Work in accordance with the Contract Documents.

11.3 Uncovering Work: If any work that is to be inspected, tested or approved is covered without approval or consent of the Project Manager, it must, if requested by the Project Manager, be uncovered for observation and/or testing. Such uncovering and replacement shall be at the Contractor's sole expense unless the Contractor has given the Project Manager timely notice of the Contractor's intention to cover such Work and the Project Manager has not acted with reasonable promptness in response to such notice.

11.3.1 If the Project Manager considers it necessary or advisable that Work covered in accordance with Paragraphs 11.2.1, 11.2.2 and 11.2.3 be observed by the City or inspected or tested by others, the Contractor at the City's request, shall uncover, expose or otherwise make available for observation, inspection or testing as the Project Manager may require, that portion of the Work in question, furnishing all necessary labor, material and equipment. If it is found that such Work is defective, the Contractor shall bear all the expenses of such uncovering, exposure, observation, inspection and testing and of satisfactory reconstruction, including compensation for additional professional services, and an appropriate deductive Change Order shall be issued. If, however, such work is not found to be defective, the Contractor shall be allowed an increase in the Contract Price or an extension of the Contract Time, or both, directly attributable to such uncovering, exposure, observation, inspection testing and reconstruction if it makes a claim therefore as provided in Articles 14 and 15.

11.4 City May Stop the Work: If the Work is defective, or the Contractor fails to supply sufficient skilled supervisory personnel or workmen or suitable materials or equipment or the work area is deemed unsafe, the City may order the Contractor to stop the Work, or any portion thereof, until the cause for such order has been eliminated; however, this right of the City to stop the Work shall not give rise to any duty on the part of the City to exercise this right for the benefit of the Contractor or any other Party. The City will not award any increase in Contract Price or Contract Time if the Work is stopped due to the circumstances described herein.

11.5 Correction or Removal of Defective Work Before Final Payment: If required by the Project Manager, the Contractor shall promptly, without cost to the City and as specified by the Project Manager, either correct any defective Work, whether or not fabricated, installed or completed, or if the Work has been rejected by the City remove it from the site and replace it with non-defective Work.

11.6 One Year Correction Period After Final Payment: If within one (1) year after the date of final acceptance, or such longer period of time as may be prescribed by law or by the terms of any applicable special guarantee required by the Contract Documents, any work is found to be defective, the Contractor shall promptly, without cost to the City and in accordance with the City's written instructions, either correct such defective Work, or, if it has been rejected by the City, remove it from the site and replace it with non-defective Work.

If the Contractor does not promptly comply with the terms of such instructions or in an emergency where delay would cause serious risk of loss or damage, the City may have the defective Work corrected or the rejected Work removed and replaced, and all direct and indirect costs for such removal and replacement, including compensation for additional professional services, shall be paid by the Contractor.

11.7 Acceptance of Defective Work, Deductions: If, instead of requiring correction or removal and replacement of defective Work, the City, at the City's sole option, prefers to accept it, the City may do so. In such a case, if acceptance occurs prior to the Project Manager's recommendation of final payments, a Change Order shall be issued incorporating the necessary revisions in the Contract's Documents, including appropriate reduction in the Contract Price; or if the acceptance occurs after such recommendation, an appropriate amount shall be paid by the Contractor to the City.

11.8 City May Correct Defective Work: If the Contractor fails within a reasonable time after written notice of the Project Manager to proceed to correct defective Work or to remove and replace rejected Work as required by the Project Manager in accordance with Paragraph 11.5, or if the Contractor fails to perform the Work in accordance with the Contract Documents, the City may, after seven (7) days written notice to the Contractor, correct and remedy any such deficiency. In exercising its rights under this paragraph, the City shall proceed expeditiously.

To the extent necessary to complete corrective and remedial action, the City may exclude the Contractor from all or part of the site, take possession of all or part of the Work, suspend the Contractor's services related thereto and take possession of the Contractor's tools, construction equipment and materials stored at the site or elsewhere. The Contractor shall allow the City's representative agents and employees such access to the site as may be necessary to enable the City to exercise its rights under this paragraph. All direct and indirect costs of the City in exercising such rights shall be charged against the Contractor in an amount verified by the Project Manager, and a Change Order shall be issued incorporating the necessary revisions in the Contract Documents and a reduction in the Contract Price. Such direct and indirect costs shall include, in particular but without limitation, compensation for additional professional services required and costs of repair and replacement of work of others destroyed or damaged by correction, removal or replacement of the Contractor's defective Work. The Contractor shall not be allowed an extension of the Contract Time because of any delay in performance of the Work attributable to the exercise by the City of the City's right hereunder.

ARTICLE 12 – INDEMNIFICATION

12.1 Disclaimer of Liability: The City shall not at any time, be liable for injury or damage occurring to any person or property from any cause, whatsoever, arising out of Contractor's construction and fulfillment of this Agreement.

12.2 Indemnification: For other, additional good valuable consideration, the receipt and sufficiency of which is hereby acknowledged:

12.2.1 Contractor shall, at its sole cost and expense, indemnify and hold harmless the City, its representatives, employees and elected and appointed officials from or on account of all claims, damages, losses, liabilities and expenses, direct, indirect or consequential including but not limited to fees and charges of engineers, architects, attorneys, consultants and other professionals and court costs arising out of or in consequence of the performance of this Agreement at all trial and appellate levels. Indemnification shall specifically include but not be limited to claims, damages, losses, liabilities and expenses arising out of or from (a) the negligent or defective design of the project and Work of this Agreement; (b) any act, omission or default of the Contractor, its subcontractors, agents, servants or employees; (c) any and all bodily injuries, sickness, disease or death; (d) injury to or destruction of tangible property, including any resulting loss of use; (e) other such damages, liabilities, or losses received or sustained by any person or persons during or on account of any operations connected with the construction of this Project including the warranty period; (f) the use of any improper materials; (g) any construction defect including both patent and latent defects; (h) failure to timely complete the work; (i) the violation of any federal, state, county or

City laws, ordinances or regulations by Contractor, its subcontractors, agents, servants, independent contractors or employees; (j) the breach or alleged breach by Contractor of any term of the Agreement, including the breach or alleged breach of any warranty or guarantee.

12.2.2 Contractor agrees to indemnify, defend, and hold harmless the City, its officers, agents and employees, from all damages, liabilities, losses, claims, fines and fees, and from any and all suits and actions of every name and description that may be brought against City, its officers, agents and employees, on account of any claims, fees, royalties, or costs for any invention or patent and/or for the infringement of any and all copyrights or patent rights claimed by any person, firm, or corporation.

12.2.3 Contractor shall pay all claims, losses, liens, settlements or judgments of any nature in connection with the foregoing indemnifications including, but not limited to, reasonable attorney's fees and costs for trials and appeals.

12.2.4 If any subcontractor, supplier, laborer, or materialmen of Contractor or any other person directly or indirectly acting for or through Contractor files or attempts to file a mechanic's or construction lien against the real property on which the work is performed or any part or against any personal property or improvements thereon or make a claim against any monies due or to become due from the City to Contractor or from Contractor to a subcontractor, for or on account of any work, labor, services, material, equipment, or other items furnished in connection with the Work or any change order, Contractor agrees to satisfy, remove, or discharge such lien or claim at its own expense by bond, payment, or otherwise within five (5) days of the filing or from receipt of written notice from the City.

Additionally, until such time as such lien or claim is satisfied, removed or discharged by Contractor, all monies due to Contractor, or that become due to Contractor before the lien or claim is satisfied, removed or otherwise discharged, shall be held by City as security for the satisfaction, removal and discharge of such lien and any expense that may be incurred while obtaining the discharge. If Contractor shall fail to do so, City shall have the right, in addition to all other rights and remedies provided by this Agreement or by law, to satisfy, remove, or discharge such lien or claim by whatever means City chooses at the entire and sole cost and expense of Contractor which costs and expenses shall, without limitation, include attorney's fees, litigation costs, fees and expenses and all court costs and assessments, and which shall be deducted from any amount owing to Contractor. In the event the amount due Contractor is less than the amount required to satisfy Contractor's obligation under this, or any other article, paragraph or section of this Agreement, the Contractor shall be liable for the deficiency due the City.

12.2.5 The Contractor and the City agree that Section 725.06(2), Florida Statutes (2020), as may be amended or revised, controls the extent and limits of the indemnification and hold harmless provisions of this Agreement, if any, and that the Parties waive any defects in the wording of this Article that runs afoul of said statutory section.

ARTICLE 13 – CHANGES IN THE WORK

13.1 Without invalidating this Agreement, the City may, at any time or from time to time order additions, deletions or revisions in the Work through the issuance of Change Orders. Upon receipt of a Change Order, the Contractor shall proceed with the Work involved. All Work shall be executed under the applicable conditions of the Contract Documents. If any Change Order causes an increase or decrease in the Contract Price or an extension or shortening of the Contract Time, an equitable adjustment will be made as provided in Article 14 or Article 15 on the basis of a claim made by either Party.

13.2 The Project Manager may authorize minor changes in the Work not involving an adjustment in the Contract Price or the Contract Time, which are consistent with the overall intent of the Contract Documents. Such changes must be in writing and signed by the City and the Contractor.

13.3 If notice of any change affecting the general scope of the Work or change in the Contract Price is required by the provisions of any Bond to be given to the Surety, it will be the Contractor's responsibility to so notify the Surety, and the amount of each applicable Bond shall be adjusted accordingly. The Contractor shall furnish proof of such adjustment to the City.

ARTICLE 14 – CHANGE OF CONTRACT PRICE

Change of Contract Price, approved by City, shall be computed as follows:

14.1 Cost of the Work: The term "Cost of the Work" means the sum of all direct costs necessarily incurred and paid by Contractor in the proper performance of the Work. Except as otherwise may be agreed to in writing by the City, these costs shall be in amounts no higher than those prevailing in the City and shall include only the following items and shall not include any of the costs itemized in Paragraph 14.3:

14.1.1 Payroll costs for employees in the direct employ of the Contractor in the performance of the Work under schedules of job classifications agreed upon by the City and the Contractor. Payroll costs for employees not employed full time on the Work shall be apportioned on the basis of their time spent on the Work. Payroll costs shall include, but not be limited to, salaries and wages plus and cost of fringe benefits which shall include social security contributions, unemployment, excise and payroll taxes,

worker's compensation, health and retirement benefits, bonuses, sick leave, vacation and applicable holiday pay.

14.1.2 Cost of all materials and equipment furnished and incorporated in the Work, including costs of transportation and storage, and required suppliers and field services. All cash discounts, rebates and refunds and all returns from sale of surplus materials and equipment shall accrue to the City, and the Contractor shall make provisions so that they may be obtained.

14.1.3 Supplemental costs including the following:

14.1.3.1 Cost, including transportation and maintenance of all materials, supplies, equipment, machinery, appliances, office and temporary facilities at the site and hand tools not owned by the workers, which are consumed in the performance of the Work.

14.1.3.2 Rentals of all construction equipment and machinery and the parts whether rented from the Contractor or others in accordance with rental agreements approved by the City, and the costs of transporting, loading, unloading, installation, dismantling and removal. The rental of any such equipment, machinery or parts shall cease when the use is no longer necessary for the Work.

14.1.3.3 Sales, consumer, use or similar taxes related to the Work and for which the Contractor is liable, imposed by laws and regulations.

14.1.3.4 Royalty payments and fees for permits and licenses.

14.1.3.5 The cost of utilities, fuel and sanitary facilities at the Work site.

14.1.3.6 Minor expenses such as telegrams, long distance telephone calls, telephone service at the site, expressage and similar petty cash items in connection with the Work.

14.1.3.7 Cost of premiums for additional bonds and insurance required because of changes in the Work.

14.2 The Contract Price may only be increased by a Change Order when Work is modified in accordance with Article 13 and approved by the City in writing. Any claim for an increase in the Contract Price resulting from a Change Order shall be based on written notice delivered to the Project Manager within ten (10) days

of the occurrence of the Change Order giving rise to the claim. Notice of the amount of the claim with supporting data shall be included in the Change Order and delivered within twenty (20) days of such occurrence unless Project Manager allows an additional period of time to ascertain accurate cost data. Any change in the Contract Price resulting from any such claim shall be incorporated in the Change Order. **IT IS EXPRESSLY AND SPECIFICALLY AGREED THAT ANY AND ALL CLAIMS FOR CHANGES TO THE CONTRACT PRICE SHALL BE WAIVED IF NOT SUBMITTED IN STRICT ACCORDANCE WITH THE REQUIREMENTS OF THIS SECTION.**

14.3 Not Included in the Cost of the Work: The term "Cost of the Work" shall not include any of the following:

14.3.1 Payroll costs and other compensation of the Contractor's officers executives, principals (of partnership and sole proprietorships), general managers, engineers, architects, estimators, attorneys, auditor, accountants, purchasing and contracting agents, expediters, timekeepers, clerks and other personnel employed by the Contractor whether at the site or in the Contractor's principal or branch office for general administration of the work and not specifically included in the agreed upon schedule of job classifications referred to in Paragraph 14.1.1, all of which are to be considered administrative costs covered by the Contractor's fee.

14.3.2 Expenses of the Contractor's principal and branch offices other than the Contractor's office at the site.

14.3.3 Any part of the Contractor's capital expenses, including interest on the Contractor's capital employed for the Work and charges against the Contractor for delinquent payments.

14.3.4 Cost of premiums for all bonds and for all insurance whether or not the Contractor is required by the Contract Documents to purchase and maintain the same.

14.3.5 Costs due to the negligence of the Contractor, any subcontractor, or anyone directly or indirectly employed by any of them or for whose acts any of them may be liable, including but not limited to, the correction of defective Work, disposal of materials or equipment wrongly supplied and making good any damage to property.

14.3.6 Other overhead or general expense costs of any kind and the costs of any item not specifically and expressly included in Paragraph 14.1.

14.4 Basis of Compensation: The Contractor's compensation, allowed to the Contractor for overhead and profit, shall be determined as follows:

14.4.1 A mutually acceptable negotiated fee:

14.4.1.1 For costs incurred under Paragraphs 14.1.1 and 14.1.2, the Contractor's fee shall not exceed five percent (5%).

14.4.1.2 No fee shall be payable on the basis of costs itemized under Paragraphs 14.1.3.1, 14.1.3.2, 14.1.3.3, 14.1.3.4, 14.1.3.5, 14.1.3.6, 14.1.3.7, 14.3.1, 14.3.2, 14.3.3, 14.3.4, 14.3.5 and 14.3.6.

14.4.1.3 The amount of credit to be allowed by the Contractor to the City for any such change which results in a net decrease plus a deduction in the Contractor's fee by an amount equal to five percent (5%) for the net decrease.

14.4.1.4 When both additions and credits are involved in any one change the combined overhead and profit shall be figured on the basis of net increase if any, however, not to exceed five percent (5%) of the agreed compensation. Profit will not be paid on any Work not performed.

14.5 Cost Breakdown Required: Whenever the cost of any Work is to be determined pursuant to this Article, the Contractor will submit in form acceptable to the City an itemized cost breakdown together with supporting documentation. Whenever a change in the Work is to be based upon mutual acceptance of a lump sum, whether the amount is an addition, credit, or no-charge-in-cost, the Contractor shall submit an estimate substantiated by a complete itemized breakdown:

14.5.1 The breakdown shall list quantities and unit prices for materials, labor, equipment and other items of cost.

14.5.2 Whenever a change involves the Contractor and one (1) or more subcontractors and the change is an increase in the agreed compensation, the overhead and profit percentage for the Contractor and each subcontractor shall be itemized separately.

14.6 Time for the City to Approve Extra Work: Any Extra Work in an amount up to and not exceeding a cumulative amount of $25,000 for a specific project can be approved by the City Manager and shall require a written Change Order proposal to be submitted to the Public Works Director for submittal and approval by the City Manager. Extra Work exceeding the cumulative amount of $25,000 for a specific project must be approved by the City Commission and a written Change Order proposal must be submitted to the Public Works Director for submittal and

approval by the City Manager and City Commission. No financial or time claim for delay to the project resulting from the Change Order approval process outlined above under Section 14.6 will be allowed.

ARTICLE 15 – CHANGE OF THE CONTRACT TIME

15.1 The Contract Time may only be changed by a Change Order. Any claim for an extension in the Contract Time shall be based on written notice delivered to the Project Manager within five (5) days of the occurrence of the event giving rise to the claim. Any change in the Contract Time resulting from any such claim shall be incorporated in a Change Order.

15.2 The Contract Time will be extended in an amount equal to time lost due to delays beyond the control of the Contractor if a claim is made there for as provided in Paragraph 15.1. Such delays shall include but not be limited to, acts or neglect by the City, or to fires, floods, labor disputes, epidemics, abnormal weather conditions, pandemics, act of Governmental Authority, state of emergency, or acts of God.

15.3 All time limits stated in the Contract Documents are of the essence. The provisions of this Article 15 shall not exclude recovery for damages for delay by the Contractor.

15.4 Delays caused by or resulting from entities, contractors or subcontractors who are not affiliated with the Contractor (non-affiliated Contractors) shall not give rise to a claim by the Contractor for damages for increases in material and/or labor costs. Such entities, contractors and subcontractors include, but are not limited to, the City's contractors and subcontractors, Florida Power and Light Company, AT&T and Florida East Coast Railway, LLC.

15.5 Rights of Various Interests: Whenever work being done by City's forces or by other contractors is contiguous to or within the limits of work covered by this Agreement, the respective rights of the various interests involved shall be established by the Project Manager to secure the completion of the various portions of the Work in general harmony.

ARTICLE 16 – LIQUIDATED DAMAGES

16.1 Upon failure of the Contractor to complete the Work within the time specified for completion, the Contractor shall pay to the City the sum of **Five Hundred Dollars ($500.00)** for each and every calendar day that the completion of the Work is delayed beyond the time specified in this Agreement for completion, as fixed and agreed liquidated damages and not as a penalty, so long as the delay is caused by the Contractor. Should an act of God or the acts or omissions of the City, its agents or representatives, in derogation to the terms of this Agreement cause the delay, the Contractor shall not be responsible for the delay nor

liquidated damages. Liquidated damages are fixed and agreed upon between the Parties, recognizing the impossibility of precisely ascertaining the amount of damages that will be sustained by the City as a consequence of such delay and both Parties desiring to obviate any question of dispute concerning the amount of damages and the cost and effect of the failure of the Contractor to complete the Work on time. Liquidated damages shall apply separately to each portion of the Work for which a time of completion is given. The City shall have the right to deduct from or retain any compensation which may be due or which may become due and payable to the Contractor the amount of liquidated damages, and if the amount retained by the City is insufficient to pay in full such liquidated damages, the Contractor shall pay all liquidated damages in full. The Contractor shall be responsible for reimbursing the City, in addition to liquidated damages or other damages for delay, for all costs of engineering, architectural fees, and inspection and other costs incurred in administering the construction of the Project beyond the completion date specified or beyond an approved extension of time granted to the Contractor whichever is later. Delays caused by or resulting from entities, contractors or subcontractors who are not affiliated with the Contractor shall not give rise to a claim by Contractor for damages for increase in material and/or labor costs. Such entities, contractors and subcontractors include, but are not limited to, the City's contractors and subcontractors, Florida Power and Light Company, AT&T, and Florida East Coast Railway, LLC.

16.2 No Extended Damages: For other and additional good and valuable consideration the receipt and sufficiency of which is hereby acknowledged, the Contractor covenants and agrees that in the event of any delay of construction or for any reason, allegation or claim, and notwithstanding the reason of the delay, reason, claim or allegation or who caused them or the construction delay or whether they were caused by the City, that there will be no entitlement to Contractor to or for any direct or indirect financial damages or losses for extended corporate overhead impact, extended project overhead impacts, project support services, mobilization or demobilization or by whatever other label or legal concept or theory and types of names or labels or basis such claims may have, or any business damages or losses of whatever type or nature, and Contractor hereby waives any right to make any such claim or claims. This provision will have application and effect when construction delays are anticipated and agreed upon by both the City and the Contractor.

ARTICLE 17 – SUSPENSION OF WORK AND TERMINATION

17.1 City May Suspend Work: The City may, at any time and without cause, suspend the Work or any portion of the Work for a period of not more than ninety (90) days by notice in writing to the Contractor which shall fix the date on which Work shall be resumed. The Contractor shall resume the Work on the date fixed. The Contractor will be allowed an increase in the Contract Price or an extension of the Contract Time, or both, directly attributable to any suspension, if the Contractor makes a claim as provided in Articles 14 and 15.

17.2 City's Right to Terminate Contract: The City may terminate this Agreement upon fifteen (15) calendar days' written notice upon the occurrence of any one or more of the following events:

17.2.1 If the Contractor makes a general assignment for the benefit of creditors.

17.2.2 If a trustee, receiver, custodian or agent of the Contractor is appointed under applicable law or under Contract, whose appointment or authority to take charge of property of the Contractor is for the purpose of enforcing a lien against such property or for the purpose of general administration of such property for the benefit of the Contractor's creditors.

17.2.3 If Contractor fails to begin the Work within fifteen (15) calendar days after the Project Initiation Date, or fails to perform the Work with sufficient workers and equipment or with sufficient materials to ensure the prompt completion of the Work, or shall perform the Work unsuitably, or cause it to be rejected as defective and unsuitable, or shall discontinue the prosecution of the Work pursuant to the accepted schedule or if Contractor shall fail to perform any material term set forth in the Contract Documents, or from any other cause whatsoever shall not carry on the Work in an acceptable manner, Project Manager may give notice in writing to Contractor and its Surety of such delay, neglect or default, specifying the same.

17.2.4 If the Contractor repeatedly fails to make prompt payments to subcontractors or for labor, material or equipment.

17.2.5 If the Contractor repeatedly disregards proper safety procedures.

17.2.6 If the Contractor disregards any local, state or federal laws or regulations.

17.2.7 If the Contactor otherwise violates any provisions of this Agreement.

17.3 If Contractor, within a period of ten (10) calendar days after such notice, shall not proceed in accordance therewith, the City may exclude the Contractor from the Work site and take the prosecution of the Work out of the hands of the Contractor, and take possession of the Work and all of the Contractor's tools, appliances, construction equipment and machinery at the site and use them without liability to the City for trespass or conversion, incorporate in the Work all materials and equipment stored at the site or for which the City has paid the Contractor but which are stored elsewhere, and finish the Work as the City may deem expedient. In this instance, the Contractor shall not be entitled to receive any further compensation until the Work is finished.

17.3.1 If after notice of termination of Contractor's right to proceed, it is determined for any reason that Contractor was not in default, the rights

and obligations of City and Contractor shall be the same as if the notice of termination had been issued pursuant to the Termination for Convenience clause as set forth in Section 17.5 below.

17.3.2 Upon receipt of Notice of Termination pursuant to Sections 17.2 or 17.5, Contractor shall promptly discontinue all affected work unless the Notice of Termination directs otherwise and deliver or otherwise make available to City all data, drawings, specifications, reports, estimates, summaries and such other information as may have been required by the Contract Documents whether completed or in process.

17.4 If the Contractor commits a default due to its insolvency or bankruptcy, the following shall apply:

17.4.1 Should this Agreement be entered into and fully executed by the Parties, funds released and the Contractor (Debtor) files for bankruptcy, the following shall occur:

17.4.1.1 In the event the Contactor files a voluntary petition under 11 U.S.C. 301 or 302, or an order for relief is entered under 11 U.S.C. 303, the Contractor shall acknowledge the extent, validity, and priority of the lien recorded in favor of the City. The Contractor further agrees that in the event of this default, the City shall, at its option, be entitled to seek relief from the automatic stay pursuant to 11 U.S.C. 362. The City shall be entitled to relief from the automatic stay pursuant to 11 U.S.C. 362(d) (1) or (d) (2), and the Contactor agrees to waive the notice provisions in effect pursuant to 11 U.S.C. 362 and any applicable Local Rules of the United States Bankruptcy Court. The Contactor acknowledges that such waiver is done knowingly and voluntarily.

17.4.1.2 Alternatively, in the event the City does not seek stay relief, or if stay relief is denied, the City shall be entitled to monthly adequate protection payments within the meaning of 11 U.S.C. 361. The monthly adequate protection payments shall each be in an amount determined in accordance with the Note and Mortgage executed by the Contractor in favor of the City.

17.4.1.3 In the event the Contractor files for bankruptcy under Chapter 13 of Title 11, United States Code in additional to the foregoing provisions, the Contractor agrees to cure any amounts in arrears over a period not to exceed twenty-four (24) months from the date of the confirmation order, and such payments shall be made in addition to the regular monthly payments required by the Note

and mortgage. Additionally, the Contractor shall agree that the City is over secured and, therefore, entitled to interest and attorney's fees pursuant to 11 U.S.C. 506(b). Such fees shall be allowed and payable as an administrative expense. Further, in the event the Contractor has less than five (5) years of payments remaining on the Note, the Contractor agrees that the treatment afforded to the claim of the City under any confirmed plan of reorganization shall provide that the remaining payments shall be satisfied in accordance with the Note, and that the remaining payments or claim shall not be extended or amortized over a longer period than the time remaining under the Note.

17.4.2 Should this Agreement be entered into and fully executed by the Parties, and the funds have not been forwarded to Contractor, the following shall occur:

17.4.2.1 In the event the Contractor files a voluntary petition pursuant to 11 U.S.C. 301 or 302, or an order for relief is entered under 11 U.S.C. 303, the Contractor acknowledges that the commencement of a bankruptcy proceeding constitutes an event of default under the terms of this Agreement. Further, the Contractor acknowledges that this Agreement constitutes an executory contract within the meaning of 11 U.S.C. 365. The Contractor acknowledges that this Agreement is not capable of being assumed pursuant to 11 U.S.C. 365(c)(2), unless the City expressly consents in writing to the assumption. In the event the City consents to the assumption, the Contractor agrees to file a motion to assume this Agreement within ten (10) days after receipt of written consent from the City, regardless of whether the bankruptcy proceeding is pending under Chapter 7, 11, or 13 of Title 11 of the United States Code. The Contractor further acknowledges that this Agreement is not capable of being assigned pursuant to 11 U.S.C. 365(b)(1).

17.5 Termination for Convenience: This Agreement may be terminated for convenience in writing by City upon thirty (30) days written notice to Contractor (delivered by certified mail, return receipt requested) of intent to terminate and the date on which such termination becomes effective. In such case, Contractor shall be paid for all work executed and expenses incurred prior to termination in addition to termination settlement costs reasonably incurred by Contractor relating to commitments which had become firm prior to the termination. Payment shall include reasonable profit for work/services satisfactorily performed. No payment shall be made for profit for work/services which have not been performed.

17.6 Where the Contractor's service has been so terminated by the City, the termination shall not affect any rights of the City against the Contractor then existing or which may thereafter accrue. Any retention or payment of moneys due the Contractor by the City will not release the Contractor from liability.

17.7 The Contractor has no right, authority or ability to terminate the Work except for the wrongful withholding of any payments due the Contractor from the City.

ARTICLE 18 – DISPUTE RESOLUTION

18.1 Resolution of Disputes: Questions, claims, difficulties and disputes of whatever nature which may arise relative to the technical interpretation of the Contract Documents and fulfillment of this Agreement as to the character, quality, amount and value of any work done and materials furnished, or proposed to be done or furnished under or, by reason of, the Contract Documents which cannot be resolved by mutual agreement of Contract Administrator and Contractor shall be submitted to the Consultant for resolution. When either Party has determined that a disputed question, claim, difficulty or dispute is at an impasse, that party shall notify the other party in writing and submit the question, claim, difficulty or dispute to the Consultant for resolution. The Parties may agree to a proposed resolution at any time without the involvement and determination of the Consultant.

18.1.1 Consultant shall notify Contract Administrator and Contractor in writing of Consultant's decision within twenty-one (21) calendar days from the date of the submission of the question, claim, difficulty or dispute, unless Consultant requires time to gather information or allow the Parties to provide additional information.

18.1.2 In the event the determination of a dispute by the Consultant under this Article is unacceptable to any of the Parties hereto, the Party objecting to the determination must notify the other Party and the City Manager, in writing within ten (10) days after receipt of the determination. The notice must state the basis of the objection and the proposed resolution. Final resolution of such dispute shall be made by the City Manager. The City Manager's decision shall be final and binding on the Parties.

18.1.3 All non-technical administrative disputes (such as billing and payment) shall be determined by Contract Administrator.

18.1.4 During the pendency of any dispute and after a determination thereof, Contractor and Contract Administrator shall act in good faith to mitigate any potential damages including utilization of construction schedule changes and alternate means of construction. During the pendency of any dispute arising under this Agreement, other than termination herein, Contractor shall carry on the Work and adhere to the progress schedule.

The Work shall not be delayed or postponed pending resolution of any disputes or disagreements.

18.1.5 For any disputes which remain unsolved, within sixty (60) calendar days after Final Completion of the Work, the Parties shall participate in mediation to address all unresolved disputes. A mediator shall be mutually agreed upon by the Parties. Should any objection not be resolved in mediation, the Parties retain all their legal rights and remedies under applicable law. If a Party objecting to a determination, fails to comply in strict accordance with the requirements of this Article, said Party specifically waives all of its rights provided hereunder, including its rights and remedies under applicable law.

ARTICLE 19 – NOTICES

19.1 All notices required by any of the Contract Documents shall be in writing and shall be deemed delivered upon mailing by certified mail, return receipt requested to the following:

To the City:

City Manager
City of Fort Lauderdale
100 North Andrews Avenue
Fort Lauderdale, Florida 33301-1016

with copy to the:

Project Manager and City Attorney
City of Fort Lauderdale
100 North Andrews Avenue
Fort Lauderdale, Florida 33301-1016

To the Contractor:

Nelson Ferreira
Ferreira Construction Southern Division Co. Inc.
9455 NW 104th Street
Medley, Florida 33178
Telephone: (305) 805-6900
Email: jbaez@ferreiraconstruction.com

ARTICLE 20 – LIMITATION OF LIABILITY

20.1 The City desires to enter into this Agreement only if in so doing the City can place a limit on the City's liability for any cause of action arising out of this Agreement, so that the City's liability for any breach never exceeds the sum of $1,000. For other good and valuable consideration, the receipt and sufficiency of which is hereby acknowledged, the Contractor expresses its willingness to enter into this Agreement with the knowledge that the Contractor's recovery from the City to any action or claim arising from the Agreement is limited to a maximum amount of $1,000, which amount shall be reduced by the amount actually paid by the City to the Contractor pursuant to this Agreement, for any action or claim arising out of this Agreement. Nothing contained in this paragraph or elsewhere in this Agreement is in any way intended either to be a waiver of the limitation placed upon the City's liability as set forth in Section 768.28, Florida Statutes (2020), as may be amended or revised, or to extend the City's liability beyond the limits established in said Section 768.28, Florida Statutes (2020), as may be amended or revised; and no claim or award against the City shall include attorney's fees, investigative costs, expert fees, suit costs or pre-judgment interest.

20.2 No Extended Damages: For other and additional good and valuable consideration the receipt and sufficiency of which is hereby acknowledged, the Contractor covenants and agrees that in the event of any delay of construction or for any reason, allegation or claim, and notwithstanding the reason of the delay, reason, claim or allegation or who caused them or the construction delay or whether they were caused by the City, that there will be no entitlement to Contractor to or for any direct or indirect financial damages or losses for extended corporate overhead impact, extended project overhead impacts, project support services, mobilization or demobilization or by whatever other label or legal concept or theory and types of names or labels or basis such claims may have, or any business damages or losses of whatever type or nature, and Contractor hereby waives any right to make any such claim or claims. This provision will have application and effect when construction delays are anticipated and agreed upon by both the City and the Contractor.

ARTICLE 21 – GOVERNING LAW; WAIVER OF JURY TRIAL

21.1 The Agreement shall be interpreted and construed in accordance with, and governed by, the laws of the state of Florida. The Parties agree that the exclusive venue for any lawsuit arising from, related to, or in connection with this Agreement shall be in the state courts of the Seventeenth Judicial Circuit in and for Broward County, Florida. If any claims arising from, related to, or in connection with this Agreement must be litigated in federal court, the Parties agree that the exclusive venue for any such lawsuit shall be in the United States

District Court or United States Bankruptcy Court for the Southern District of Florida. **BY ENTERING INTO THIS AGREEMENT, THE PARTIES HEREBY EXPRESSLY WAIVE ANY AND ALL RIGHTS EITHER PARTY MIGHT HAVE TO A TRIAL BY JURY OF ANY ISSUES RELATED TO THIS AGREEMENT. IF A PARTY FAILS TO WITHDRAW A REQUEST FOR A JURY TRIAL IN A LAWSUIT ARISING OUT OF THIS AGREEMENT AFTER WRITTEN NOTICE BY THE OTHER PARTY OF VIOLATION OF THIS SECTION, THE PARTY MAKING THE REQUEST FOR JURY TRIAL SHALL BE LIABLE FOR THE REASONABLE ATTORNEYS' FEES AND COSTS OF THE OTHER PARTY IN CONTESTING THE REQUEST FOR JURY TRIAL, AND SUCH AMOUNTS SHALL BE AWARDED BY THE COURT IN ADJUDICATING THE MOTION.**

ARTICLE 22 – MISCELLANEOUS

22.1 The duties and obligations imposed by this Agreement and the rights and remedies available to the Parties and, in particular but without limitation, the warranties, guaranties and obligations imposed upon the Contractor and all of the rights and remedies available to the City, are in addition to, and are not to be construed in any way as a limitation of, any rights and remedies available to any or all of them which are otherwise imposed or available by laws or regulations, by special warranty or guarantee or by other provisions of the Contract Documents, and the provisions of this Paragraph will be as effective as if repeated specifically in the Contract Documents, and the provisions of this Paragraph will survive final payment and termination or completion of this Agreement.

22.2 The Contractor shall not assign or transfer this Agreement or its rights, title or interests. The obligations undertaken by the Contractor pursuant to this Agreement shall not be delegated or assigned to any other person or firm. Violation of the terms of this Paragraph shall constitute a material breach of Agreement by the Contractor and the City any, at its discretion, cancel this Agreement and all rights, title and interest of the Contractor which shall immediately cease and terminate.

22.3 The Contractor and its employees, volunteers and agents shall be and remain as independent contractor and not agents or employees of the City with respect to all of the acts and services performed by and under the terms of this Agreement. This Agreement shall not in any way be constructed to create a partnership, association or any other kind of joint undertaking or venture between the Parties.

22.4 The City reserves the right to audit the records of the Contractor relating in any way to the Work to be performed pursuant to this Agreement at any time during the performance and term of this Agreement and for a period of three (3) years after completion and acceptance by the City. If required by the City, the Contractor agrees to submit to an audit by an independent certified public accountant selected by the City. The Contractor shall allow the City to inspect,

examine and review the records of the Contractor at any and all times during normal business hours during the term of this Agreement.

22.5 The remedies expressly provided in this Agreement to the City shall not be deemed to be exclusive but shall be cumulative and in addition to all other remedies in favor of the City now or later existing at law or in equity.

22.6 Should any part, term or provisions of this Agreement be decided by the courts to be invalid, illegal or in conflict with any state or federal law, the validity of the remaining portion or provision shall not be affected.

22.7 Prohibition Against Contracting With Scrutinized Companies: As to any contract for goods or services of $1 million or more and as to the renewal of any contract for goods or services of $1 million or more, subject to *Odebrecht Construction, Inc., v. Prasad*, 876 F.Supp.2d 1305 (S.D. Fla. 2012), *affirmed*, *Odebrecht Construction, Inc., v. Secretary, Florida Department of Transportation*, 715 F.3d 1268 (11th Cir. 2013), with regard to the "Cuba Amendment," the Contractor certifies that it is not on the Scrutinized Companies with Activities in Sudan List or the Scrutinized Companies with Activities in the Iran Petroleum Energy Sector List, and that it does not have business operations in Cuba or Syria, as provided in Section 287.135, Florida Statutes (2020), as may be amended or revised. As to any contract for goods or services of any amount and as to the renewal of any contract for goods or services of any amount, the Contractor certifies that it is not on the Scrutinized Companies that Boycott Israel List created pursuant to Section 215.4725, Florida Statutes (2020), as may be amended or revised, and that it is not engaged in a boycott of Israel. The City may terminate this Agreement at the City's option if the Contractor is found to have submitted a false certification as provided under subsection (5) of Section 287.135, Florida Statutes (2020), as may be amended or revised, or been placed on the Scrutinized Companies with Activities in Sudan List or the Scrutinized Companies with Activities in the Iran Petroleum Energy Sector List or the Scrutinized Companies that Boycott Israel List created pursuant to Section 215.4725, Florida Statutes (2020), as may be amended or revised, or is engaged in a boycott of Israel or has been engaged in business operations in Cuba or Syria, as defined in Section 287.135, Florida Statutes (2020), as may be amended or revised.

22.8 Public Entity Crimes: In accordance with the Public Crimes Act, Section 287.133, Florida Statutes (2020), as may be amended or revised, a person or affiliate who is a contractor, consultant or other provider, who has been placed on the convicted vendor list following a conviction for a public entity crime may not submit a bid on a contract to provide any goods or services to the City, may not submit a bid on a contract with the City for the construction or repair of a public building or public work, may not submit bids on leases of real property to the City, may not be awarded or perform work as a contractor, supplier, subcontractor, or consultant under a contract with the City, and may not transact any business with

the City in excess of the threshold amount provided in Section 287.017, Florida Statutes (2020), as may be amended or revised, for category two purchases for a period of thirty-six (36) months from the date of being placed on the convicted vendor list. Violation of this section by Contractor shall result in cancellation of the City purchase and may result in Contractor debarment.

22.9 Attorney Fees: If City or Contractor incurs any expense in enforcing the terms of this Agreement through litigation, the prevailing Party in that litigation shall be reimbursed for all such costs and expenses, including but not limited to court costs, and reasonable attorney fees incurred during litigation.

22.10 Public Records

IF THE CONTRACTOR HAS QUESTIONS REGARDING THE APPLICATION OF CHAPTER 119, FLORIDA STATUTES, TO THE CONTRACTOR'S DUTY TO PROVIDE PUBLIC RECORDS RELATING TO THIS AGREEMENT, CONTACT THE CUSTODIAN OF PUBLIC RECORDS AT PRRCONTRACT@FORTLAUDERDALE.GOV, 954-828-5002, CITY CLERK'S OFFICE, 100 NORTH ANDREWS AVENUE, FORT LAUDERDALE, FLORIDA 33301.

Contractor shall:

1. Keep and maintain public records required by the City in order to perform the service.

2. Upon request from the City's custodian of public records, provide the City with a copy of the requested records or allow the records to be inspected or copied within a reasonable time at a cost that does not exceed the cost provided in Chapter 119, Florida Statutes (2020), as may be amended or revised, or as otherwise provided by law.

3. Ensure that public records that are exempt or confidential and exempt from public records disclosure requirements are not disclosed except as authorized by law for the duration of the contract term and following completion of this Agreement if the Contractor does not transfer the records to the City.

4. Upon completion of the Agreement, transfer, at no cost, to the City all public records in possession of the Contractor or keep and maintain public records required by the City to perform the service. If the Contractor transfers all public records to the City upon completion of this Contract, the Contractor shall destroy any duplicate public records that are exempt or confidential and exempt from public records disclosure requirements. If the Contractor keeps and maintains public records upon completion of this Agreement, the Contractor shall meet all applicable requirements for retaining public records.

All records stored electronically must be provided to the City, upon request from the City's custodian of public records, in a format that is compatible with the information technology systems of the City.

CITY

IN WITNESS OF THE FOREGOING, the Parties have set their hands and seals the day and year first written above.

CITY OF FORT LAUDERDALE, a Florida municipal

By: _____
CHRISTOPHER J. LAGERBLOOM
City Manager

Date: 02 09 22

ATTEST:

By: _____
~~JEFFREY A. MODARELLI~~ David R. Soloman
City Clerk

Approved as to Legal Form:
Alain E. Boileau, City Attorney

By: _____
RHONDA MONTOYA HASAN
Assistant City Attorney

CONTRACTOR

WITNESSES:

FERREIRA CONSTRUCTION SOUTHERN DIVISION CO. INC., a Florida corporation

By: Danny Garcia - Vice President.

Andres Perez
Print Name

Marjori Gonzalez
Print Name

ATTEST:

By: _____
Secretary

(CORPORATE SEAL)

STATE OF Florida:

COUNTY OF Miami - Dade:

The foregoing instrument was acknowledged before me by means of ☑ physical presence or ☐ online notarization, this 17th day of January, 2022, by Danny Garcia, as Vice President for Ferreira Construction Southern Division Co. Inc., a Florida corporation.

Notary Public State of Florida
Yanira Ramos Ferro
My Commission HH 072945
Expires 12/16/2024

_____
(Signature of Notary Public - State of Florida)

Yanira Ramos Ferro
(Print, Type, or Stamp Commissioned Name of Notary Public)

Personally Known X OR Produced Identification _____
Type of Identification Produced: _____

INSTR # 117874452
Recorded 01/19/22 at 10:29 AM
Broward County Commission
7 Page(s)
#1

SURETY BOND

IN COMPLIANCE WITH AND INCORPORATING THE PROVISIONS OF SECTION 255.05, FLORIDA STATUTES

THIS IS A SURETY BOND given by **Ferreira Construction Southern Division Co. Inc.** the "Contractor" as principal, referred to in this Bond as "Contractor" and **Berkshire Hathaway Specialty Insurance Company** as "Surety," and they represent by this instrument that they are bound to the CITY OF FORT LAUDERDALE, a municipal corporation of the State of Florida ("City"), in the sum of **$4,733,400 (Four Million, Seven Hundred and Thirty-Three Thousand, and Four Hundred Dollars)** for the payment of which, to be made to the City of Fort Lauderdale, Florida, they jointly and severally, bind themselves and each of their heirs, executors, administrators, successors and assigns.

Owner Name:	CITY OF FORT LAUDERDALE a municipal corporation of the State of Florida
Owner Address and Telephone:	City Hall, Public Works Department 100 N. Andrews Avenue Fort Lauderdale, Florida 33301 (954) 828-5772
Bond No.:	47-SUR-300088-01-0446
Contractor Name, Address, Telephone:	Ferreira Construction Southern Division Co. Inc. 9455 NW 104th Street Medley, FL 33178 (305) 805-6900
Surety Company, Address, Telephone	Berkshire Hathaway Specialty Insurance Company 1314 Douglas Street, Suite 1400 Omaha, NE 68102 - 1944 (402) 916-3000
City Project No./Bid No.:	11715; 12453-613
Name of Project:	Las Olas Isles Undergrounding of Overhead Utilities
Project Location: **Legal Description and Street Address**	Las Olas Isles (Area B) Fort Lauderdale, Florida
Description of Work	The work includes, but is not limited to, furnishing all labor, materials, equipment, tools, accessories, etc. and performing all related work such that overhead utilities belonging to Florida Power & Light (FPL), Comcast, AT&T, and any other utility could be undergrounded. It includes, but is not limited to, the installation of conduits, utility underground lines, hand holes, cable pull boxes, concrete transformer pads, pad mounted transformers, pad mounted switches, pad-mounted capacitors, and various other utility equipment and devices.

"Contractor" is bound by an instrument in writing dated the **21st** day of **December**, **2021**, by which Contractor has contracted with the City of Fort Lauderdale, Florida, to furnish labor, tools, and materials for the Project referenced and described above, together with all work incidental thereto, as fully set out in the plans, specifications and details on file in the Office of the City Engineer of the City.

Notice required by Section 255.05(6), Florida Statutes: "This bond is given to comply with Section 255.05 Florida Statutes, and any action instituted by a claimant under this bond for payment must be in accordance with the notice and time limitation provisions in Section 255.05(2), Florida Statutes."

The condition of the above obligation is such that if the above bound "Contractor," or its successor or assigns shall in good faith and in good, sufficient, substantial and workmanlike manner, perform the work and comply with the conditions of the contract, including payment of penalties, in strict accordance with the terms and provisions stipulated in it and shall indemnify and hold harmless the City against and for payments of any and all damages that may happen to persons or property by reason of excavations, embankments, obstructions and all other work in streets, alleys or places in connection with the work, or arising out of any act, neglect or omission of the "Contractor" or its agents, servants, or employees with relation to the work, and shall indemnify and hold harmless the City against and from all suits and acts of every nature and description arising out of any claims by patentees of any process connected with the work agreed to be performed under the contract, or of any materials used upon the work, and pay all costs accruing if the contract is cancelled and a new contract for finishing the work is let, and all other expenses lawfully chargeable to the "Contractor," then this agreement shall be null and void; otherwise it is to remain in full force and effect, but it is expressly provided, understood and agreed that if the "Contractor" or its subcontractors fail to duly and promptly pay for any labor, material, or other supplies used by "Contractor" or any of its subcontractors in the performance of the work to be done, or the Contractor defaults in its Contract with the City, the "Surety" will promptly pay to all claimants, as defined in Section 255.05(1), Florida Statutes, the same in an amount not exceeding the sum specified in this bond, together with interest at the rate of fifteen percent (15%) per annum, and the Surety hereby stipulates and agrees that no change, extension, reduction, alteration or addition to the terms of the contract or the plans, details and specifications shall in any way affect the obligations of this bond.

Whenever Contractor shall be, and is declared by the City to be in default under the contract, the City may proceed to cancel the contract and award a new contract for finishing the work or order the Surety to promptly remedy the default by obtaining a bid or bids for completing the contract in accordance with the original contract terms and conditions. Upon the determination by the City of the lowest responsible bidder, the Surety shall complete all work and pay the full cost of completion, less previous payments.

This Bond is effective for one (1) year after completion and acceptance of the work, with liability equal to twenty-five percent (25%) of the contract price, and is so conditioned that the "Contractor" will, at its own expense, correct any defective or faulty work or material which appears within one (1) year after completion of the work and final payment, upon notification by the City.

IN WITNESS WHEREOF, the above "Contractor" has signed this Agreement, and the "Surety" has caused this Agreement to be signed in its name by its Attorney-in-Fact, and its corporate seal affixed, this 14th day of January, 2022.

Signed, sealed and delivered
in the presence of:

(Witness) Signature

Yaniral Ramos Ferro
(Witness) Print Name

KT Wjr
(Witness) Signature

Kevin T. Walsh, Jr., Witness
(Witness) Print Name

CONTRACTOR: Ferreira Construction Southern Division Co., Inc.

(SEAL)

Danny Garcia - Vice president
Print Name and Title

SURETY: Berkshire Hathaway Specialty Insurance Company

Marisol Mojica
Local Agent

(SEAL)

Marisol Mojica, Attorney-In-Fact
Print Name and Title

(SEAL)

SB-2

255.05 Bond Form, Rev. 10/21/05

ACKNOWLEDGEMENT OF CONTRACTOR - IF A CORPORATION

STATE OF Florida

COUNTY OF Miami -Dade

ON THE 18th DAY OF January, 2022 BEFORE ME PERSONALLY APPEARED Danny Garcia TO BE KNOWN, WHO, BEING BY ME DULY SWORN, DID DEPOSE AND SAY; THAT (S)HE IS THE Vice President OF Ferreira Construction Southern Division Co., Inc. THE CORPORATION THAT EXECUTED THE FOREGOING INSTRUMENT, AND ACKNOWLEDGED TO ME THAT SUCH CORPORATION EXECUTED THE SAME.

IN WITNESS WHEREOF, I HAVE HEREUNTO SET MY HAND AND AFFIXED MY OFFICIAL SEAL, AT MY OFFICE IN THE ABOVE COUNTY, THE DAY AND YEAR WRITTEN ABOVE.

Notary Public

Notary Public State of Florida
Yanira Ramos Ferro
My Commission HH 072945
Expires 12/16/2024

YANIRA RAMOS FERRO NOTARY PUBLIC STATE OF FLORIDA My Comm. Expires 12/16/2024 No. HH072945

ACKNOWLEDGEMENT OF SURETY COMPANY

STATE OF **NEW JERSEY**

COUNTY OF **MORRIS**

On the 14th day of January, **2022** before me personally appeared **Marisol Mojica** to me known, who being by me duly sworn, did depose and say; that (s)he is the Attorney-In-Fact of **Berkshire Hathaway Specialty Insurance Company**, the corporation that executed the foregoing instrument, and acknowledged to me that such corporation executed the same.

In witness whereof, I have hereunto set my hand and affixed my official seal, at my office in the above county, the day and year written above.

Notary Public

William A. Drayton Jr.
Notary Public
State of New Jersey
My commission expires April 9, 2026

Berkshire Hathaway Specialty Insurance

Power Of Attorney

BERKSHIRE HATHAWAY SPECIALTY INSURANCE COMPANY
NATIONAL INDEMNITY COMPANY / NATIONAL LIABILITY & FIRE INSURANCE COMPANY

Know all men by these presents, that **BERKSHIRE HATHAWAY SPECIALTY INSURANCE COMPANY**, a corporation existing under and by virtue of the laws of the State of Nebraska and having an office at One Lincoln Street, 23rd Floor, Boston, Massachusetts 02111, **NATIONAL INDEMNITY COMPANY**, a corporation existing under and by virtue of the laws of the State of Nebraska and having an office at 3024 Harney Street, Omaha, Nebraska 68131 and **NATIONAL LIABILITY & FIRE INSURANCE COMPANY**, a corporation existing under and by virtue of the laws of the State of Connecticut and having an office at 100 First Stamford Place, Stamford, Connecticut 06902 (hereinafter collectively the "Companies"), pursuant to and by the authority granted as set forth herein, do hereby name, constitute and appoint: **Marisol Mojica, Kevin T. Walsh, Jr., Thomas MacDonald, Krystal L. Stravato, 100 South Jefferson Road, Suite 101, of the city of Whippany, State of New Jersey,** their true and lawful attorney(s)-in-fact to make, execute, seal, acknowledge, and deliver, for and on their behalf as surety and as their act and deed, any and all undertakings, bonds, or other such writings obligatory in the nature thereof, in pursuance of these presents, the execution of which shall be as binding upon the Companies as if it has been duly signed and executed by their regularly elected officers in their own proper persons. **This authority for the Attorney-in-Fact shall be limited to the execution of the attached bond(s) or other such writings obligatory in the nature thereof.**

In witness whereof, this Power of Attorney has been subscribed by an authorized officer of the Companies, and the corporate seals of the Companies have been affixed hereto this date of December 20, 2018. This Power of Attorney is made and executed pursuant to and by authority of the Bylaws, Resolutions of the Board of Directors, and other Authorizations of **BERKSHIRE HATHAWAY SPECIALTY INSURANCE COMPANY, NATIONAL INDEMNITY COMPANY** and **NATIONAL LIABILITY & FIRE INSURANCE COMPANY**, which are in full force and effect, each reading as appears on the back page of this Power of Attorney, respectively. **The following signature by an authorized officer of the Company may be a facsimile, which shall be deemed the equivalent of and constitute the written signature of such officer of the Company for all purposes regarding this Power of Attorney, including satisfaction of any signature requirements on any and all undertakings, bonds, or other such writings obligatory in the nature thereof, to which this Power of Attorney applies.**

BERKSHIRE HATHAWAY SPECIALTY INSURANCE COMPANY,

By: _____
David Fields, Executive Vice President

NATIONAL INDEMNITY COMPANY, NATIONAL LIABILITY & FIRE INSURANCE COMPANY,

By: _____
David Fields, Vice President

NOTARY
State of Massachusetts, County of Suffolk, ss:
On this 20th day of December, 2018, before me appeared David Fields, Executive Vice President of BERKSHIRE HATHAWAY SPECIALTY INSURANCE COMPANY and Vice President of NATIONAL INDEMNITY COMPANY and NATIONAL LIABILITY & FIRE INSURANCE COMPANY, who being duly sworn, says that his capacity is as designated above for such Companies; that he knows the corporate seals of the Companies; that the seals affixed to the foregoing instrument are such corporate seals; that they were affixed by order of the board of directors or other governing body of said Companies pursuant to its Bylaws, Resolutions and other Authorizations, and that he signed said instrument in that capacity of said Companies.

[Notary Seal]

GEOFFERY A. DELISIO
Notary Public
Commonwealth of Massachusetts
My Comm. Expires November 29, 2024

_____
Notary Public

I, Ralph Tortorella, the undersigned, Officer of **BERKSHIRE HATHAWAY SPECIALTY INSURANCE COMPANY, NATIONAL INDEMNITY COMPANY** and **NATIONAL LIABILITY & FIRE INSURANCE COMPANY**, do hereby certify that the above and foregoing is a true and correct copy of the Power of Attorney executed by said Companies which is in full force and effect and has not been revoked. IN TESTIMONY WHEREOF, see hereunto affixed the seals of said Companies this January 14, 2022.

_____
Officer

To verify the authenticity of this Power of Attorney please contact us at: BHSI Surety Department, Berkshire Hathaway Specialty Insurance Company, One Lincoln Street, 23rd Floor Boston, MA 02111 | (770) 625-2516 or by email at Jennifer.Porter@bhspecialty.com *THIS POWER OF ATTORNEY IS VOID IF ALTERED*

To notify us of a claim please contact us on our 24-hour toll free number at (855) 453-9675, via email at claimsnotice@bhspecialty.com, via fax to (617) 507-8259, or via mail.

Client#: 353923 FERRECONST

ACORD™ CERTIFICATE OF LIABILITY INSURANCE

DATE (MM/DD/YYYY) 1/24/2022

THIS CERTIFICATE IS ISSUED AS A MATTER OF INFORMATION ONLY AND CONFERS NO RIGHTS UPON THE CERTIFICATE HOLDER. THIS CERTIFICATE DOES NOT AFFIRMATIVELY OR NEGATIVELY AMEND, EXTEND OR ALTER THE COVERAGE AFFORDED BY THE POLICIES BELOW. THIS CERTIFICATE OF INSURANCE DOES NOT CONSTITUTE A CONTRACT BETWEEN THE ISSUING INSURER(S), AUTHORIZED REPRESENTATIVE OR PRODUCER, AND THE CERTIFICATE HOLDER.

IMPORTANT: If the certificate holder is an ADDITIONAL INSURED, the policy(ies) must have ADDITIONAL INSURED provisions or be endorsed. If SUBROGATION IS WAIVED, subject to the terms and conditions of the policy, certain policies may require an endorsement. A statement on this certificate does not confer any rights to the certificate holder in lieu of such endorsement(s).

PRODUCER	CONTACT NAME: Gianna Costello	
Conner Strong & Buckelew 32 Old Slip, Suite 32B New York, NY 10005	PHONE (A/C, No, Ext): 646-891-4983	FAX (A/C, No): 646-862-8242
	E-MAIL ADDRESS: gcostello@connerstrong.com	

INSURER(S) AFFORDING COVERAGE	NAIC #
INSURER A : Zurich American Insurance Company	16535
INSURER B : Endurance American Specialty Ins. Co.	41718
INSURER C : GuideOne National Insurance Company	14334
INSURER D : Colony Insurance Company	39993
INSURER E : Navigators Insurance Company	42307
INSURER F :	

INSURED
Ferreira Construction Co, Inc. dba
Ferreira Construction Southern Division
9455 NW 104th Street
Medley, FL 33178

COVERAGES **CERTIFICATE NUMBER:** **REVISION NUMBER:**

THIS IS TO CERTIFY THAT THE POLICIES OF INSURANCE LISTED BELOW HAVE BEEN ISSUED TO THE INSURED NAMED ABOVE FOR THE POLICY PERIOD INDICATED. NOTWITHSTANDING ANY REQUIREMENT, TERM OR CONDITION OF ANY CONTRACT OR OTHER DOCUMENT WITH RESPECT TO WHICH THIS CERTIFICATE MAY BE ISSUED OR MAY PERTAIN, THE INSURANCE AFFORDED BY THE POLICIES DESCRIBED HEREIN IS SUBJECT TO ALL THE TERMS, EXCLUSIONS AND CONDITIONS OF SUCH POLICIES. LIMITS SHOWN MAY HAVE BEEN REDUCED BY PAID CLAIMS.

INSR LTR	TYPE OF INSURANCE	ADDL INSR	SUBR WVD	POLICY NUMBER	POLICY EFF (MM/DD/YYYY)	POLICY EXP (MM/DD/YYYY)	LIMITS	
A	[X] COMMERCIAL GENERAL LIABILITY [ ] CLAIMS-MADE [X] OCCUR GEN'L AGGREGATE LIMIT APPLIES PER: [ ] POLICY [X] PRO-JECT [X] LOC [ ] OTHER:			GLO019785405	07/01/2021	07/01/2022	EACH OCCURRENCE DAMAGE TO RENTED PREMISES (Ea occurrence) MED EXP (Any one person) PERSONAL & ADV INJURY GENERAL AGGREGATE PRODUCTS - COMP/OP AGG $	$2,000,000 $1,000,000 $10,000 $2,000,000 $4,000,000 $4,000,000 $
A	AUTOMOBILE LIABILITY [X] ANY AUTO [ ] OWNED AUTOS ONLY [ ] SCHEDULED AUTOS [X] HIRED AUTOS ONLY [X] NON-OWNED AUTOS ONLY			BAP019787306	07/01/2021	07/01/2022	COMBINED SINGLE LIMIT (Ea accident) BODILY INJURY (Per person) BODILY INJURY (Per accident) PROPERTY DAMAGE (Per accident) $	$2,000,000 $ $ $ $
B	[ ] UMBRELLA LIAB [X] OCCUR [X] EXCESS LIAB [ ] CLAIMS-MADE [ ] DED [ ] RETENTION $			EXC30000705503	07/01/2021	07/01/2022	EACH OCCURRENCE AGGREGATE $	$3,000,000 $3,000,000 $
A	WORKERS COMPENSATION AND EMPLOYERS' LIABILITY ANY PROPRIETOR/PARTNER/EXECUTIVE OFFICER/MEMBER EXCLUDED? Y/N [N] (Mandatory In NH) If yes, describe under DESCRIPTION OF OPERATIONS below	N/A		WC019787405	07/01/2021	07/01/2022	[X] PER STATUTE [ ] OTH-ER E.L. EACH ACCIDENT E.L. DISEASE - EA EMPLOYEE E.L. DISEASE - POLICY LIMIT	 $1,000,000 $1,000,000 $1,000,000
C	Excess Liability			099002088	07/01/2021	07/01/2022	$5M Occ. / $5M Agg	
D	Excess Liability			AR6461134	07/01/2021	07/01/2022	$5M Occ. / $5M Agg	
E	Excess Liability			NY21EXCZ02BJWIV	07/01/2021	07/01/2022	$12M Occ. / $12M Agg	

DESCRIPTION OF OPERATIONS / LOCATIONS / VEHICLES (ACORD 101, Additional Remarks Schedule, may be attached if more space is required)

Coverage: Commercial Property & Inland Marine Policy
Carrier: Aspen American Insurance Company (NAIC: 43460)
Effective: 07/01/2021 - 07/01/2022
Policy #: IMACUQM21
Limits Installation Floater: $3,000,000 Jobsite Limit; $5,000,000 Catastrophe Limit
(See Attached Descriptions)

CERTIFICATE HOLDER

City of Fort Lauderdale
100 N. Andrews Avenue, 619
Fort Lauderdale, FL 33301

CANCELLATION

SHOULD ANY OF THE ABOVE DESCRIBED POLICIES BE CANCELLED BEFORE THE EXPIRATION DATE THEREOF, NOTICE WILL BE DELIVERED IN ACCORDANCE WITH THE POLICY PROVISIONS.

AUTHORIZED REPRESENTATIVE

W. Michael Trapmond

© 1988-2015 ACORD CORPORATION. All rights reserved.

DESCRIPTIONS (Continued from Page 1)

Riggers Liability: Included

RE: Project Number: 11715 - Bid 12453-613 Las Olas Isles Undergrounding of Overhead Utilities

City of Fort Lauderdale, its officials, employees, and volunteers are Additional Insured on a primary and non-contributory basis on the above referenced Commercial General Liability Policy if required by written contract. A waiver of subrogation applies as required by written contract and permitted by law.

MEMORANDUM

DATE: January 24, 2022

TO: Alisha Auth, Sr. Claims Adjuster

FROM: Maureen Lewis, Procurement Division

SUBJECT: Project No. 11715; Bid No. 12453-613 – Las Olas Isles Undergrounding of Overhead Utilities

Please review the attachments listed below in connection with the referenced contract:

☒ Insurance certificate

☒ Surety Bond

SURETY BOND REQUIREMENT **$4,733,400**

If the City's requirements are met, please sign below and return. Thank you.

By: Alisha Auth Date: January 24, 2022

Alisha Auth
Sr. Claims Adjuster

c: Contract

Ferreira Construction Co., Inc.

Bid Contact **Jorge A Baez**
jbaez@ferreiraconstruction.com
Ph 786-831-0838

Address **9455 NW 104th Street**
Medley, FL 33178

Bid Bond (Status: Authorized on Nov 2, 2020)

Item #	Line Item	Notes	Unit Price	Qty/Unit		Attch.	Docs
12453-613-01-01	BASE BID: Mobilization [Price not to exceed 5% of Bid Amount]	**Supplier Product Code:**	**First Offer - $229,000.00**	1 / lump sum	**$229,000.00**	**Y**	**Y**
12453-613-01-02	BASE BID: Demobilization [Price not to exceed 5% Bid Amount]	**Supplier Product Code:**	**First Offer - $71,800.00**	1 / lump sum	**$71,800.00**		**Y**
12453-613-01-03	BASE BID: Install FPL Pad, Boxes and Chambers 6-inch Single Phase Transformer Pad Complete	**Supplier Product Code:**	**First Offer - $500.00**	10 / each	**$5,000.00**		**Y**
12453-613-01-04	BASE BID: Install FPL Pad, Boxes and Chambers 24-inch Single Phase Transformer Pad Complet	**Supplier Product Code:**	**First Offer - $400.00**	107 / each	**$42,800.00**		**Y**
12453-613-01-05	BASE BID: Install FPL Pad, Boxes and Chambers 6-inch Open Delta Transformer Pad Complete	**Supplier Product Code:**	**First Offer - $500.00**	1 / each	**$500.00**		**Y**
12453-613-01-06	BASE BID: Install FPL Pad, Boxes and Chambers 24-inch Three Phase Pad Complete	**Supplier Product Code:**	**First Offer - $2,000.00**	2 / each	**$4,000.00**		**Y**
12453-613-01-07	BASE BID: Install FPL Pad, Boxes and Chambers 6-inch	**Supplier Product Code:**	**First Offer - $2,000.00**	1 / each	**$2,000.00**		**Y**

	Three Phase Pad Complete					
12453-613-01-08	BASE BID: Install FPL Pad, Boxes and Chambers 69-inch x 79-inch x 40-inch Vista Switch Cha	**Supplier Product Code:**	**First Offer - $2,000.00**	7 / each	**$14,000.00**	**Y**
12453-613-01-09	BASE BID: Install FPL Pad, Boxes and Chambers 5-feet x 10-feet Feeder Splice Box Complete	**Supplier Product Code:**	**First Offer - $2,000.00**	4 / each	**$8,000.00**	**Y**
12453-613-01-10	BASE BID: Install FPL Pad, Boxes and Chambers 48-inch Polymer Primary Pull Box Complete	**Supplier Product Code:**	**First Offer - $1,500.00**	9 / each	**$13,500.00**	**Y**
12453-613-01-11	BASE BID: Install FPL Pad, Boxes and Chambers 30-inch polymer Service Hand-hole Complete	**Supplier Product Code:**	**First Offer - $1,000.00**	14 / each	**$14,000.00**	**Y**
12453-613-01-12	BASE BID: Install FPL Pad, Boxes and Chambers Driveway Loading Rated 30-inch Splice Box	**Supplier Product Code:**	**First Offer - $1,500.00**	92 / each	**$138,000.00**	**Y**
12453-613-01-13	BASE BID: Install FPL Pad, Boxes and Chambers Driveway Loading Rated 50-inch Splice Box	**Supplier Product Code:**	**First Offer - $1,500.00**	15 / each	**$22,500.00**	**Y**
12453-613-01-14	BASE BID: Install FPL Directional Boring Directional Bore Machine Setup with Pits Complete	**Supplier Product Code:**	**First Offer - $900.00**	250 / each	**$225,000.00**	**Y**
12453-613-01-15	BASE BID: Install FPL Directional Boring 1-6-inch Conduit via Directional Bore Complete	**Supplier Product Code:**	**First Offer - $20.00**	450 / linear foot	**$9,000.00**	**Y**
12453-613-01-16	BASE BID: Install FPL	**Supplier**	**First Offer - $30.00**	5000 / linear foot	**$150,000.00**	**Y**

	Directional Boring 2-6-inch Conduit via Directional Bore Complete	**Product Code:**				
12453-613-01-17	BASE BID: Install FPL Directional Boring 3-2-inch Conduit via Directional Bore Complete	**Supplier Product Code:**	**First Offer - $20.00**	25500 / linear foot	**$510,000.00**	**Y**
12453-613-01-18	BASE BID: Install FPL Directional Boring 2-2-inch Conduit via Directional Bore Complete	**Supplier Product Code:**	**First Offer - $16.00**	20500 / linear foot	**$328,000.00**	**Y**
12453-613-01-19	BASE BID: Install FPL Directional Boring 1-2-inch Conduit via Directional Bore Complete	**Supplier Product Code:**	**First Offer - $11.00**	5500 / linear foot	**$60,500.00**	**Y**
12453-613-01-20	BASE BID: Install ATT/COMCAST Directional Boring 1-4-inch Conduit via Directional Bore	**Supplier Product Code:**	**First Offer - $15.50**	26000 / linear foot	**$403,000.00**	**Y**
12453-613-01-21	BASE BID: Install ATT/COMCAST Directional Boring 1-2-inch Conduit via Directional Bore	**Supplier Product Code:**	**First Offer - $9.00**	26000 / linear foot	**$234,000.00**	**Y**
12453-613-01-22	BASE BID: Install ATT/COMCAST Directional Boring 2-1-inch Service Conduit via Directional	**Supplier Product Code:**	**First Offer - $9.00**	26000 / linear foot	**$234,000.00**	**Y**
12453-613-01-23	BASE BID: Install Trenching 24-inch Trench (Hand Dig with Backfill)	**Supplier Product Code:**	**First Offer - $100.00**	200 / linear foot	**$20,000.00**	**Y**
12453-613-01-24	BASE BID: Install Trenching 30-inch Trench (Hand Dig with Backfill)	**Supplier Product Code:**	**First Offer - $100.00**	200 / linear foot	**$20,000.00**	**Y**
12453-613-01-25	BASE BID: Install	**Supplier**	**First Offer - $100.00**	200 / linear foot	**$20,000.00**	**Y**

	Trenching 36-inch Trench (Hand Dig with Backfill)	**Product Code:**				
12453-613-01-26	BASE BID: Install Trenching 42-inch Trench (Hand Dig with Backfill)	**Supplier Product Code:**	**First Offer - $100.00**	200 / linear foot	**$20,000.00**	**Y**
12453-613-01-27	BASE BID: Install Trenching 48-inch Trench (Hand Dig with Backfill)	**Supplier Product Code:**	**First Offer - $150.00**	200 / linear foot	**$30,000.00**	**Y**
12453-613-01-28	BASE BID: Install FPL Conduit Only 1-2-inch Conduit Compete	**Supplier Product Code:**	**First Offer - $15.00**	6000 / linear foot	**$90,000.00**	**Y**
12453-613-01-29	BASE BID: Install FPL Conduit Only 1-6-inch Conduit Compete	**Supplier Product Code:**	**First Offer - $15.00**	6000 / linear foot	**$90,000.00**	**Y**
12453-613-01-30	BASE BID: Install ATT/COMCAST Conduit Only 1-4-inch Conduit Compete	**Supplier Product Code:**	**First Offer - $10.00**	500 / linear foot	**$5,000.00**	**Y**
12453-613-01-31	BASE BID: Install ATT/COMCAST Conduit Only 1-2-inch Conduit Compete	**Supplier Product Code:**	**First Offer - $8.00**	500 / linear foot	**$4,000.00**	**Y**
12453-613-01-32	BASE BID: Install ATT/COMCAST Conduit Only 1-1-inch Conduit Compete	**Supplier Product Code:**	**First Offer - $8.00**	500 / linear foot	**$4,000.00**	**Y**
12453-613-01-33	BASE BID: Install FPL Cable 4/0 HDPE-TPX secondary cable in 2-inch conduit 50 feet or les	**Supplier Product Code:**	**First Offer - $2.00**	41000 / linear foot	**$82,000.00**	**Y**
12453-613-01-34	BASE BID: Install FPL Cable 4/0 HDPE HDPE-TPX secondary cable in 2-inch conduit 51 to 200	**Supplier Product Code:**	**First Offer - $2.00**	1000 / linear foot	**$2,000.00**	**Y**
12453-613-01-35	BASE BID: Install FPL Cable 4/0-HDPE-TPX	**Supplier Product**	**First Offer - $6.00**	1000 / linear foot	**$6,000.00**	**Y**

	secondary cable in 2-inch conduit over 200 feet	**Code:**				
12453-613-01-36	BASE BID: Install FPL Cable 1CC- 1/0 XPE primary cable in 2-inch conduit 100 feet or less	**Supplier Product Code:**	**First Offer - $2.50**	92000 / linear foot	**$230,000.00**	**Y**
12453-613-01-37	BASE BID: Install FPL Cable 1CC- 1/0 XPE primary cable in 2-inch conduit 101 to 400 feet	**Supplier Product Code:**	**First Offer - $3.00**	1000 / linear foot	**$3,000.00**	**Y**
12453-613-01-38	BASE BID: Install FPL Cable 1CC- 1/0 XPE primary cable in 2-inch conduit over 400 feet	**Supplier Product Code:**	**First Offer - $3.00**	1000 / linear foot	**$3,000.00**	**Y**
12453-613-01-39	BASE BID: Install FPL Cable 3CC-1000KCMIL XPE Feeder cable in 6-inch conduit 50 feet or le	**Supplier Product Code:**	**First Offer - $6.50**	200 / linear foot	**$1,300.00**	**Y**
12453-613-01-40	BASE BID: Install FPL Cable 3CC-1000KCMIL XPE Feeder cable in 6-inch conduit over 50 feet	**Supplier Product Code:**	**First Offer - $3.00**	2000 / linear foot	**$6,000.00**	**Y**
12453-613-01-41	BASE BID: Terminate FPL Cable 4/0 HDPE TPX secondary cable complete	**Supplier Product Code:**	**First Offer - $17.00**	1000 / each	**$17,000.00**	**Y**
12453-613-01-42	BASE BID: Terminate FPL Cable 1/0 XPE primary cable complete	**Supplier Product Code:**	**First Offer - $17.00**	100 / each	**$1,700.00**	**Y**
12453-613-01-43	BASE BID: Terminate FPL Cable 3CC-1000KCMIL XPE feeder cable complete	**Supplier Product Code:**	**First Offer - $17.00**	100 / each	**$1,700.00**	**Y**
12453-613-01-44	BASE BID: Splice FPL Cable 1/0 XPE primary	**Supplier Product**	**First Offer - $200.00**	50 / each	**$10,000.00**	**Y**

	cable complete	**Code:**				
12453-613-01-45	BASE BID: Splice FPL Cable 3CC-1000KCMIL XPE feeder cable complete	**Supplier Product Code:**	**First Offer - $300.00**	40 / each	**$12,000.00**	**Y**
12453-613-01-46	BASE BID: Install FPL Padmounted Transformer single phase Pad-mounted Transformer complete	**Supplier Product Code:**	**First Offer - $1,000.00**	117 / each	**$117,000.00**	**Y**
12453-613-01-47	BASE BID: Install FPL Padmounted Transformer open delta (2 TXs) Pad-mounted Transformers c	**Supplier Product Code:**	**First Offer - $3,000.00**	1 / each	**$3,000.00**	**Y**
12453-613-01-48	BASE BID: Install FPL Padmounted Transformer three phase Pad-mounted Transformer complete	**Supplier Product Code:**	**First Offer - $1,000.00**	3 / each	**$3,000.00**	**Y**
12453-613-01-49	BASE BID: Install FPL Padmounted Switch Cabinet Vista Switch complete	**Supplier Product Code:**	**First Offer - $1,000.00**	7 / each	**$7,000.00**	**Y**
12453-613-01-50	BASE BID: Install FPL Feeder Riser 3CC-1000KCMIL FPL Feeder Riser on existing wood pole co	**Supplier Product Code:**	**First Offer - $4,000.00**	1 / each	**$4,000.00**	**Y**
12453-613-01-51	BASE BID: Install FPL Feeder Riser 3CC-1000KCMIL FPL Feeder Riser on existing concrete pol	**Supplier Product Code:**	**First Offer - $4,000.00**	1 / each	**$4,000.00**	**Y**
12453-613-01-52	BASE BID: Install FPL Service/Meter to access Customer Cable to intercept existing UG cust	**Supplier Product Code:**	**First Offer - $4,000.00**	1 / each	**$4,000.00**	**Y**
12453-613-01-53	BASE BID: Install FPL	**Supplier**	**First Offer - $4,000.00**	1 / each	**$4,000.00**	**Y**

	Service/Meter to convert Existing FPL Service Meter Enclosure Only	**Product Code:**				
12453-613-01-54	BASE BID: Install FPL UG Service 4/0 TPX, including 2-inch conduit, cable, 24-inch trench	**Supplier Product Code:**	**First Offer - $10.00**	500 / linear foot	**$5,000.00**	**Y**
12453-613-01-55	BASE BID: Install FPL UG Service Parallel 4/0 TPX, including 2-inch conduit, cable, 24-inc	**Supplier Product Code:**	**First Offer - $10.00**	500 / linear foot	**$5,000.00**	**Y**
12453-613-01-56	BASE BID: Install FPL Bump Out Assembly (Removable Barriers) Padmount Transformer Protecti	**Supplier Product Code:**	**First Offer - $200.00**	125 / each	**$25,000.00**	**Y**
12453-613-01-57	BASE BID: Construct Type D Curb	**Supplier Product Code:**	**First Offer - $12.00**	2500 / linear foot	**$30,000.00**	**Y**
12453-613-01-58	BASE BID: Paving Florida Department of Transportation Type III asphaltic concrete surface	**Supplier Product Code:**	**First Offer - $9.00**	50000 / square yard	**$450,000.00**	**Y**
12453-613-01-59	BASE BID: Paving Florida Department of Transportation Type III asphaltic concrete for leve	**Supplier Product Code:**	**First Offer - $160.00**	435 / ton	**$69,600.00**	**Y**
12453-613-01-60	BASE BID: Milling of existing asphalt pavement to a depth of one inch	**Supplier Product Code:**	**First Offer - $2.25**	50000 / square yard	**$112,500.00**	**Y**
12453-613-01-61	BASE BID: Pavement marking and signage new 6 inch double yellow thermoplastic	**Supplier Product Code:**	**First Offer - $2.00**	2000 / linear foot	**$4,000.00**	**Y**
12453-613-01-62	BASE BID: Pavement marking and signage	**Supplier Product Code:**	**First Offer - $1.00**	5000 / linear foot	**$5,000.00**	**Y**

	new 6 inch single white thermoplastic					
12453-613-01-63	BASE BID: Pavement marking and signage new 6 inch single yellow skip thermoplastic	**Supplier Product Code:**	**First Offer - $1.00**	2000 / linear foot	**$2,000.00**	**Y**
12453-613-01-64	BASE BID: Pavement marking and signage new 24 inch stop bar white thermoplastic	**Supplier Product Code:**	**First Offer - $2.00**	500 / linear foot	**$1,000.00**	**Y**
12453-613-01-65	BASE BID: Pavement marking and signage various colors and blue R.P.M.ï¿½s at fire hydrants w	**Supplier Product Code:**	**First Offer - $140.00**	150 / each	**$21,000.00**	**Y**
12453-613-01-66	BASE BID: Service Connection, Single Phase, to all residences and energize to complete fun	**Supplier Product Code:**	**First Offer - $1,000.00**	310 / each	**$310,000.00**	**Y**
Bid Allowance			$150,000.00			

Lot Total **$4,583,400.00**

Supplier Total **$4,583,400.00**

Bid Bond from Surety2000

Ferreira Construction Co., Inc

Surety	Surety2000
Bid Bond Number	SFL20574634
Bond Type	0001
Bond Form	Bid Bond in accordance with Contract Specifications
Bid Date	11/3/2020
Bid ID	12453-613
Security Percent	5%
Job Description	Las Olas Isles Undergrounding of Overhead Utilities

---

Agency ID	A05147908
Name	American Global LLC
Address	2121 SW 3rd Avenue Ste 501, Miami, Florida 33129, United States
Phone	305-351-9153
Contact Name	Krystal Stravato
Bond Status	
Execution Date	10/13/2020 3:07:04 PM
Executed By	Krystal Stravato 2121 SW 3rd Avenue, Suite 501, Miami, Florida 33129, United States 862-777-8193

Contractor ID	
Name	Ferreira Construction Co., Inc
Contractor Tax ID	22-3334957
Assigned Contractor ID	5639975731
Address	31 Tannery Rd, Branchburg, New Jersey 08876, United States
Phone	908-534-8655

Name	City of Fort Lauderdale
Address	100 North Andrews Ave, Fort Lauderdale, Florida 33301, United States

---

Surety ID	SD06157175

Name	Berkshire Hathaway Specialty Insurance Company
NAIC Number	22276
State of Incorporation	Nebraska
Contact	
Address	100 Federal St., 20th Floor, Boston, Massachusetts 02110, United States
Phone	
Terror Rider	http://legacy.surety2000.com/Riders/

Ferreira Construction Co., Inc.

Item: **BASE BID:Mobilization [Price not to exceed 5% of Bid Amount]**

Attachments

Job References for Fort Lauderdale - Las Olas Isles OH to UG Project.pdf

Tino Garcia Florida GC License exp 2022.pdf

FERREIRA

Project References for City of Fort Lauderdale - Las Olas Isles Undergrounding of Overhead Utilities

1.

- **Location:** Palm Beach
- **Dates of Construction:** Completed March 2018
- **Name of Job:** East-WB-Pratt Whitney Feeder
- **Contract Value:** $438,970.00
- **Scope of Work:** Directional Bore 3-6", Manhole set, cable pull, splices, terminations, riser transfer.
- **Clients Name/Address/Telephone #/Email Address:**
  - FLORIDA POWER & LIGHT COMPANY - Juan Armas
  - 700 Universe Boulevard Juno Beach, FL 33408
  - 772-979-1985
  - Juan.Carlos.Armas@fpl.com

2.

- **Location:** Broward
- **Dates of Construction:** Completed July 2017
- **Name of Job:** Feeder East-CB-Metropical Blvd.
- **Contract Value:** $296,300.00
- **Scope of Work:** Placement of duct and installation of manholes
- **Clients Name/Address/Telephone #/Email Address:**
  - FLORIDA POWER & LIGHT COMPANY - Chanda Young
  - 700 Universe Boulevard Juno Beach, FL 33408
  - 954-224-4052
  - Chanda.Young@fpl.com

3.

- **Location:** Miami-Dade
- **Dates of Construction:** Completed December 2017
- **Name of Job:** 68th Street Palmetto Feeder
- **Contract Value:** $667,543.00
- **Scope of Work:** Directional Bore, 4w manhole set, pull cable, terminate
- **Clients Name/Address/Telephone #/Email Address:**
  - FLORIDA POWER & LIGHT COMPANY - John Czencz
  - 700 Universe Boulevard Juno Beach, FL 33408
  - 305-773-4030
  - John.L.Czencz@fpl.com

4.

- **Location:** NW 195TH ST. AND NW 12TH AVE., MIAMI GARDENS
- **Dates of Construction:** Completed August 2019
- **Name of Job:** FPL – WR#6321324 County Line Bore
- **Contract Value:** $248,930.00
- **Scope of Work:** DIRECTIONAL BOR 4500' OF 1-6" FLEX CONDUIT AND PULL 1000 MCM FROM RISER TO RISER
- **Clients Name/Address/Telephone #/Email Address:**
  - FLORIDA POWER & LIGHT COMPANY - Hugo Cerna 305-299-9264
  - 700 Universe Boulevard Juno Beach, FL 33408

5.

- **Location:** SW 2ND AVE, MIAMI
- **Dates of Construction:** Completed 2018
- **Name of Job:** FPL – WR#7958801 & WR#7958809 Brickell Miami Sub Duct & Cable Pull
- **Contract Value:** $353,240.00
- **Scope of Work:**
  - For WR#7958801, installation of two (2) 2-way MH
    - Five (5) SRAM-44 concrete pads Break into existing DB (energized cables) and reroute ducts to SRAM pads
    - Six-hundred (600') feet of 5-6" HDPE ducts
    - Two-hundred (200') feet of 6-6" PVC Enc. Ducts
  - For WR#7958809, installation of
    - 8500' of 3-1/C-1000KCMIL AL-25KV-XPEJ, thru fourteen (14) MH with associated racking/fireproofing, etc.
    - Five (5) SRAM-44 with cable terminations
    - Thirty-four (34) set of splices; total of 102 splices in 14 MH
    - Cable terminations at two (2) feeder cubicles, and 5 Network cubicles.
    - Remove 2500' LF of existing PILC cable, thru eight MH.
    - Completion of 14 MH assessment forms.
- **Clients Name/Address/Telephone #/Email Address:**
  - FLORIDA POWER & LIGHT COMPANY - Dave Fite
  - 700 Universe Boulevard Juno Beach, FL 33408
  - 305.377.414
  - David.Fite@fpl.com

6.

- **Location:** Davie, FL 33314 Broward County
- **Dates of Construction:** Completed June 2019
- **Name of Job:** FPL – WR#7366478 Timberlake Bore
- **Contract Value:** $317,400.00
- **Scope of Work:**
  - Timberlake 70-5237 (62H) – WR 7366478 (Locs 1-28 & 32.1-33.6) FDR Bore; 2,154 CMH
    - 1 – 3,550' FDR bore - 12" min distance to other utilities o 2,220'; 2-6" HDPE conduit (0 spare) – 1000A KCMIL cable ▪ 36" min cover
    - Crossing SW 73rd Ave (S/O 5200 SW 73rd Ave)
    - 1,330'; 4-6" HDPE conduit (2 spares) – 1000A KCMIL cable ▪ Crossing: • SW 76th Ave (N/O 5355 SW 76th Ave); 36" min cover
    - SW 70th Ave (S/O 5150 SW 70TH AVE); 36" min cover
    - 1 – 930' PRI bore - 12" min distance to other utilities o 36" min cover
    - 1-6" HDPE conduit – 1/0A cable
    - 2 feeder riser installations
    - 12 feeder splice box installations
    - 10,700' of 6" HDPE conduit
- **Clients Name/Address/Telephone #/Email Address:**
  - FLORIDA POWER & LIGHT COMPANY - Ymmar Smith
  - 700 Universe Boulevard Juno Beach, FL 33408
  - 954-494-8625

7.

- **Location:** 130 Sevilla Ave
- **Dates of Construction:** Completed November 2019
- **Name of Job:** FPL – WR#8417432 Sevilla Duct Bank
- **Contract Value:** $271,670.00
- **Scope of Work:**
  - The purpose of this job is to install a duct bank and manhole system along Sevilla Ave between Ponce de Leon and Galiano St. The job requires the installation by trench of roughly 290' of 12-6" Duct bank and 165' of 6-6" Duct bank. A new 2-way manhole will also need to be installed.
- **Clients Name/Address/Telephone #/Email Address:**
  - FLORIDA POWER & LIGHT COMPANY - Dave Fite
  - 700 Universe Boulevard Juno Beach, FL 33408
  - 305.377.414
  - David.Fite@fpl.com

8.

- **Location:** NE 1ST AVE, MIAMI
- **Dates of Construction:** Completed July 2020
- **Name of Job:** FPL - WR#8530088 Miami World Center
- **Contract Value:** $202,715.00
- **Scope of Work:**
  - This job requires the installation of a (6) 6" duct bank between two existing manholes from North Miami Ave to NE 1st AVE along the 7th St Promenade. The duct bank will require a 330' section of bore.
- **Clients Name/Address/Telephone #/Email Address:**
  - FLORIDA POWER & LIGHT COMPANY - Dave Fite
  - 700 Universe Boulevard Juno Beach, FL 33408
  - 305.377.414
  - David.Fite@fpl.com

9.

- **Location:** NW 47th Ave Miami Gardens
- **Dates of Construction:** Completed May 2020
- **Name of Job:** FDOT – T6442 NW 47th Ave SR847 from North of NW 199th Ave
- **Contract Value:** $12,892,744.00
- **Scope of Work:** Over 3 miles of roadway reconstruction, full 4 lane divided with continuous drainage, street lighting, traffic signalization, a culvert extension, bridge widening and the construction of approximately 2 miles of 16" water main with cross connections and abandonment of the old main as a joint project with Miami-Dade Water & Sewer.
- Clients Name/Address/Telephone #/Email Address:
  - FLORIDA Department of Transportation - John M Garzia
  - 1000 N.W. 111 Avenue Miami, Florida 33172561-694-3310
  - 786.510.6822

Ron DeSantis, Governor

Halsey Beshears, Secretary

Florida dbpr

STATE OF FLORIDA
DEPARTMENT OF BUSINESS AND PROFESSIONAL REGULATION

CONSTRUCTION INDUSTRY LICENSING BOARD

THE GENERAL CONTRACTOR HEREIN IS CERTIFIED UNDER THE
PROVISIONS OF CHAPTER 489, FLORIDA STATUTES

GARCIA, DICTINIO

FERREIRA CONSTRUCTION SOUTHERN DIVISION CO INC
13000 SE FLORA AVE
HOBE SOUND FL 33455

LICENSE NUMBER: CGC1509418

EXPIRATION DATE: AUGUST 31, 2022

Always verify licenses online at MyFloridaLicense.com

Do not alter this document in any form.

This is your license. It is unlawful for anyone other than the licensee to use this document.

CITY OF FORT LAUDERDALE
PUBLIC WORKS DEPARTMENT

MINORITY BUSINESS ENTERPRISE (MBE) - WOMEN BUSINESS ENTERPRISE (WBE)

PRIME CONTRACTOR IDENTIFICATION FORM

In order to assist us in identifying the status of those companies doing business with the City of Fort Lauderdale, this form must be completed and returned with your bid package.

Name of Firm:	**Ferreira Construction Southern Division Co., Inc.**
Address of Firm:	**9455 NW 104th Street Medley, FL 33178**
Telephone Number:	**305.805.6900**
Name of Person Completing Form:	**Jorge Baez**
Title:	**Chief Estimator**
Signature:	**Jorge Baez**
Date:	**10/30/2020**
City Project Number:	**12453-613**
City Project Description:	**Las Olas Isles Undergrounding of Overhead Utilities**

Please check the item(s) which properly identify the status of your firm:

☑ Our firm is not a MBE or WBE.

☐ Our firm is a MBE, as at least 51 percent is owned and operated by one or more socially and economically disadvantaged individuals.

☐ American Indian ☐ Asian ☐ Black ☐ Hispanic

☐ Our firm is a WBE, as at least 51 percent is owned and operated by one or more women.

☐ American Indian ☐ Asian ☐ Black ☐ Hispanic

MBE/WBE CONTRACTOR INFORMATION

The City, in a continuing effort, is encouraging the increased participation of minority and women-owned businesses in Public Works Department related contracts. Along those lines, we are requiring that each firm provide documentation detailing their own programs for utilizing minority and women-owned businesses.

Submit this information as a part of this bid package and refer to the checklist, to ensure that all areas of concern are covered. The low responsive bidder may be contacted to schedule a meeting to discuss these objectives. It is our intention to proceed as quickly as possible with this project, so your cooperation in this matter is appreciated.

CONTRACTOR CHECKLIST

☑ List Previous City of Fort Lauderdale Contracts

N/A

☑ Number of Employees in your firm **110**

--Percent (**10%**) Women

--Percent (**85%**) Minorities

--Job Classifications of Women and Minorities

Office personnel; Skilled laborers; superintendents, foreman, Project Manager

☑ Use of minority and/or women subcontractors on past projects.

FDOT NW 47th Avenue Project

☑ Nature of the work subcontracted to minority and/or women-owned firms.

Pavement Marking

☑ How are subcontractors notified of available opportunities with your firm?

We extend an invitation out to bid for jobs that we need their services for.

☑ Anticipated amount to be subcontracted on this project.

TBD

☑ Anticipated amount to be subcontracted to minority and/or women-owned businesses on this project.

TBD

QUESTIONNAIRE SHEET

PLEASE PRINT OR TYPE:

Firm Name: **Ferreira Construction**
Southern Division

President **Nelson Ferreira**

Business Address: **9455 NW 104th Street**

Telephone: **305.805.6900** Fax: **305 805 4802**

E-Mail Address:
jbaez@ferreiraconstruction.com

What was the last project of this nature which you completed? Include the year, description, and contract value.
See attached

The following are named as three corporations and representatives of those corporations for which you have performed work similar to that required by this contract, and which the City may contact as your references (include addresses, telephone numbers and e-mail addresses). Include the project name, year, description, and contract value.
Florida Power & Light - David Fite - 305.377.4146 - David.Fite@fpl.com
Florida Power & Light - Mr. Raul Febre - (561) 904-3641 - Raul.Febre@fpl.com
Florida Power & Light - Gary A Carstens (Contract Sepcialist) - (941) 483-2069 - Gary.A.Carstens@fpl.com

How many years has your organization been in business? **32+**

Have you ever failed to complete work awarded to you; if so, where and why?
No

The name of the qualifying agent for the firm and his position is: **Danny Garcia - Vice President**

Certificate of Competency Number of Qualifying Agent: **Dictinio Garcia - Senior Vice President**

Effective Date: **N/A**Expiration Date: **08/31/2022**

Licensed in: **FL**Engineering Contractor's License # **CGC1509418**
(County/State)

Expiration Date:
08/31/2022

NOTE: To be considered for award of this contract, the bidder must submit a financial statement upon request.

NOTE: Contractor must have proper licensing and shall provide copy of same with his proposal.

QUESTIONNAIRE SHEET

1. Have you personally inspected the proposed work and have you a complete plan for its performance?
Yes

2. Will you sublet any part of this work? If so, list the portions or specialties of the work that you will.

a) **Directional Boring**

b) **Asphalt Pavement**

c)

d)

e)

f)

g)

3. What equipment do you own that is available for the work?
36 / AC-02 / 1999 / Air Compressor (Portable)Deere 4 cylinder diesel engine, trailer mounted with 205/75D15 tires, poor to fair condition with good tires (05,681 hours) (Not In Service)
37 / AC-04 / 2004 / Air Compressor (Portable) Deere 4 cylinder diesel engine, trailer mounted with 205/75D15 tires, good condition with good tires (1,357 hours) (Addition To D185QJD5, 185 CFM
38 AC-05 2004 Air Compressor (Portable) Cummins B3.9C diesel engine, trailer mounted with 225/75R15 tires, fair condition with fair tires (2,623 hours) P375WCU, 375 CFM
39 AC-06 1991 Air Compressor (Portable) Deere 4 cylinder diesel engine, trailer mounted with 205/75D15 tires, good condition with good tires P185WJD, 185 CFM
40 AT-01 Articulated End Dump - 6x6 Cummins L-10 diesel engine and powershift transmission, with dump body, enclosed ROPS cab with air conditioning, and 23.5R25 tires, poor to fair condition with very good tires (one flat tire) (meter reading not available - battery dead) (Parked For Approx. 2 Years - Transmission Needs To Be TA30, 30 Ton
41 AT-02 1999 Articulated End Dump - 6x6 (Parts Machine: Missing Engine, Transmission, & Tires - Cab Removed) (Serial Number Owner Supplied) TA30, 30 Ton
42 AT-03 2004 Articulated End Dump - 4x6Cummins CM570 diesel engine and powershift transmission, with dump body, enclosed ROPS cab, and 23.5-25 tires, good condition with good tires (meter reading not available - no power) TA30, 30 Ton
43 AT-04 2004 Articulated End Dump - 6x6 Cummins M-11 diesel engine and ZE powershift transmission, with dump body with bed liners, enclosed ROPS cab, and 23.5R25 tires, good condition with good tires (meter reading not available - ignition switch broken) TA30, 30 Ton
44 AT-05 1991 All Terrain Dump Truck 6 cylinder diesel engine and hydrostatic transmission, with dump body, ROPS canopy, and 29" rubber crawlers, good condition with good undercarriage (2,948 hours) (Serial Number Owner Supplied) MST2200
45 B-05 1989 Hydraulic Excavator Komatsu 6 cylinder diesel engine and hydraulic drive, with 10' dipper stick with attachment bracket, 30" digging bucket, enclosed ROPS cab, and 31.5" TBG pads, fair condition with fair to good undercarriage (01,802 hours) (Cab Missing Bottom

Glass; Door Glass Broken; Sheet PC220LC-5
46 B-06 Hydraulic Excavator Komatsu SA6D108-1 diesel engine and hydraulic drive, with 10' dipper stick, Werk Brau 36" digging bucket, and 33.5" TBG pads, fair to good condition with fair to good undercarriage (no hour meter) (Cab Rough; Sheet Metal PC300LC-5L
47 B-07 1998 Hydraulic Excavator Komatsu 6 cylinder diesel engine and hydraulic drive, with 10' dipper stick, 48" digging bucket with straight edge, enclosed ROPS cab with air conditioning (not working), and 31.5" TBG pads, fair to good condition with good undercarriage (meter inoperable) (Missing Bottom PC220LC-6LE
48 B-08 1998 Hydraulic Excavator 6 cylinder diesel engine and hydraulic drive, with 10'9" dipper stick with attachment bracket, Esco 48" digging bucket, enclosed ROPS cab, and 34" TBG pads, fair to good condition with good undercarriage (15,064 hours) (Missing Bottom Front Glass; Cab Rusted; Sheet Metal Damage) PC300LC-6LC
49 B-09 1998 Hydraulic Excavator Isuzu 6 cylinder diesel engine and hydraulic drive, with 21' dipper stick, 10' dipper stick (not in use), Esco 54" cleanup bucket, Topcon GPS system, enclosed ROPS cab, and 32" TBG pads, good condition with fair to good undercarriage (05,812 hours) (10' Dipper Stick Not Inspected) (Missing Bottom Front Glass) 2800 Quantum
50 B-10 2000 Hydraulic Mini Excavator Komatsu 3 cylinder diesel engine and hydraulic drive, with swing boom, 38" dipper stick, 16" digging bucket with weld-on cutting edge, 41" backfill blade, ROPS canopy, and 9" rubber crawlers, fair condition with good undercarriage (3,582 hours) PC15R-8
51 B-11 1999 Hydraulic Excavator (Rubber Tired) Komatsu 6 cylinder diesel engine and hydraulic drive, with 7'3" dipper stick, 72" cleanup bucket, auxiliary hydraulics, enclosed ROPS cab, (4) hydraulic outriggers, and 18x19.5 tires, good condition with fair to good tires (meter PW170ES-6KA
52 B-13 1999 Hydraulic Excavator Komatsu 6 cylinder diesel engine and hydraulic drive, with 11' dipper stick with attachment bracket, Esco 36" digging bucket, and 35.5" TBG pads, fair condition with good undercarriage (no hour meter) (Rear Engine Compartment Damage; Cab Rough PC400LC-6LC
53 B-14 1999 Hydraulic Excavator Komatsu 6 cylinder diesel engine and hydraulic drive, with 12' dipper stick, CP 66" digging bucket, enclosed ROPS cab with air conditioning, and 40" DBG pads, fair to good condition with good undercarriage (no hour meter) (Cab Rough; Seat Torn) (Dipper Stick, Digging Bucket, & Counterweight Removed) PC750LC-6
54 B-15 2007 Hydraulic Excavator Komatsu ECOT3 diesel engine and hydraulic drive, with 10' dipper stick, Komatsu 48" digging bucket, enclosed ROPS cab with air conditioning, with 32" TBG pads, good condition with fair to good undercarriage (07,525 hours) PC220LC-8
55 B-16 2011 Hydraulic Mini Excavator Mitsubishi S402-T diesel engine and hydraulic drive, with 70" dipper stick, Werk Brau 24" digging bucket, auxiliary hydraulics, 78" backfill blade, ROPS post, and 16" rubber crawlers, good condition with good undercarriage (3,829 hours) 305.5D CR
56 B-17 2011 Hydraulic Excavator Volvo VACT diesel engine and hydraulic drive, with 13' dipper stick, Esco 48" digging bucket, auxiliary hydraulics, auto lube system, enclosed ROPS cab, and 27.5" TBG pads, good condition with good undercarriage (04,701 hours) (Operating Lease) EC380DL
57 B-18 2012 Hydraulic Excavator Volvo VACT diesel engine and hydraulic drive, with 10'6" dipper stick, CP 36" digging bucket, auxiliary hydraulics, enclosed ROPS cab with air conditioning, and 31.5" TBG pads, good condition with good undercarriage (06,194 hours) (Oil Leak Under Pan) EC380DL
58 B-19 2015 Hydraulic ExcavatorKomatsu SAA6D114E-5 diesel engine and hydraulic drive, with 13'6" dipper stick, Tag 54" digging bucket, auto lube system (not working), enclosed ROPS cab with backup camera and air conditioning, and 33.5" TBG pads, good condition with good undercarriage (02,558 hours) (Extension Cylinder PC360LC-10
59 BC-02 2000 Skid Steer Loader Perkins 4 cylinder diesel engine and hydrostatic transmission, with 72" general purpose loader bucket with bolt-on cutting edge, ROPS

canopy, and 12-16.5 tires, good condition with good tires (06,742 hours) 1750D
60 BC-03 2000 Skid Steer Loader Perkins 4 cylinder diesel engine and hydrostatic transmission, with 65" general purpose loader bucket with bolt-on cutting edge, auxiliary hydraulics, and 12-16.5 tires, fair to good condition with very good tires 1750D
61 BC-04 / BC-05 2013 Skid Steer Loader Cat 4 cylinder diesel engine and hydrostatic transmission, with 74" general purpose loader bucket, high-flow auxiliary hydraulics, 2012 Cat model PC408B hydraulic cold planer attachment, s/n XCP00240 (not in use), enclosed ROPS cab with air conditioning, and 14x17.5 tires good condition with good tires (2,430 hours) (Operating Lease) 272D XHP
62 BR-01 2011 Broom - Self-Propelled Kubota V1505 diesel engine, with 8' hydraulic boom, water system, tow hitch, and 205/75R14 tires, good condition with good tires 8HC
63 C-08 1992 Tractor Loader Backhoe Cat 3054 diesel engine and shuttle transmission, with general purpose loader bucket with bolt-on cutting edge and fork brackets, Werk Brau 24" digging bucket, ROPS canopy, and 10.00R15 front and 19.5Lx24 rear tires, good condition with good tires 416B
64 C-10 1994 Tractor Loader Backhoe Cat 3054 diesel engine and shuttle transmission, with general purpose loader bucket with bolt-on cutting edge and fork brackets, Werk Brau 24" digging bucket, ROPS canopy, and 10.00R15 front and 19.5Lx24 rear tires, good condition with good tires 416B
65 C-11 1993 Tractor Loader Backhoe Cat 3054 diesel engine and shuttle transmission, with general purpose loader bucket with bolt-on cutting edge and fork brackets, Werk Brau 24" digging bucket, ROPS canopy, and 10.00R15 front and 19.5Lx24 rear tires, good condition with good tires 416B
66 C-12 1996 Tractor Loader Backhoe Deere 4 cylinder diesel engine and shuttle transmission, with general purpose loader bucket with bolt-on cutting edge, 18" digging bucket, ROPS canopy, and 10.00R15 front and 19.5L24 rear tires, good condition with good tires 310D
67 C-13 1995 Tractor Loader Backhoe Deere 4 cylinder diesel engine and shuttle transmission, with general purpose loader bucket with bolt-on cutting edge, 18" digging bucket, ROPS canopy, and 10.00R15 front and 19.5L24 rear tires, good condition with good tires 310D
68 C-14 1996 Tractor Loader Backhoe Deere 4 cylinder diesel engine and shuttle transmission, with general purpose loader bucket with bolt-on cutting edge, 18" digging bucket, ROPS canopy, and 10.00R15 front and 19.5L24 rear tires, good condition with good tires 416B
69 C-15 2002 Tractor Loader Backhoe Deere 4 cylinder diesel engine and shuttle transmission, with general purpose loader bucket with bolt-on cutting edge, 18" digging bucket, ROPS canopy, and 10.00R15 front and 19.5L24 rear tires, good condition with good tires 416D
70 C-17 2005 Tractor Loader Backhoe Cat 6 cylinder diesel engine and shuttle transmission, with general purpose loader bucket with bolt-on cutting edge and fork brackets, 24" heavy duty digging bucket, ROPS canopy, and 11Lx16 front and 19.5Lx24 rear tires, good condition with fair to good tires (6,188 hours) 416D
71 C-18 2005 Tractor Loader Backhoe Cat 6 cylinder diesel engine and shuttle transmission, with general purpose loader bucket with bolt-on cutting edge and fork brackets, 24" heavy duty digging bucket, ROPS canopy, and 11Lx16 front and 19.5Lx24 rear tires, good condition with fair to good tires (6,188 hours) 416D
72 C-19 2014 Tractor Loader Backhoe - 4x4 Cat 4 cylinder diesel engine and shuttle transmission, with general purpose loader bucket with bolt-on cutting edge, Werk Brau 18" digging bucket, ROPS canopy, and 12.5/80-18 front and 19.5L24 rear tires, good condition with good tires (2,012 hours) (Right Side Fender Damage - One Side) 416F
73 C-20 2011 Tractor Loader Backhoe - 4x4 Deere 4 cylinder diesel engine and powershift transmission, with NPK model GH4 hydraulic impact hammer, s/n 100037, 24" digging bucket

(not in use), rear auxiliary hydraulics, ROPS canopy, and 12-16.5 front and 19.5L-24 rear tires, good condition with very good tires (1,384 hours) (Operating Lease) (Digging Bucket Located In Yard - No 310J

74 CB-01 Pneumatractor Detroit 4-71 diesel engine and hydrostatic transmission, with hydraulic impact hammer, (26) front pocketbook counterweights, enclosed ROPS cab, (2) hydraulic outriggers, and 11Lx16 front and 16.9x24 rear tires, fair condition with good tires (1,100 hours) D134-0007

75 CB-03 Pneumatractor Detroit 4-71 diesel engine and hydrostatic transmission, with (26) front pocketbook counterweights, enclosed ROPS cab, (2) hydraulic outriggers, and 11Lx16 front and 16.9x24 rear tires, fair condition with fair tires (cab meter reads 9,760 hours) (machine meter reads 4,413 D134-0007

76 CB-04 Pneumatractor Detroit 4-71 diesel engine and hydrostatic transmission, with hydraulic impact hammer, (26) front pocketbook counterweights, enclosed ROPS cab, and 11Lx16 front and 18.4x24 rear tires, fair to good condition with fair to good tires (meter reading not available) D134-0007

77 CC-01 2008 Komatsu 6 cylinder 200HP diesel engine and hydraulic drive, with Gara-Pagos mobile jaw crusher with approx. 4'x10' hopper, 42"xapprox. 30' front discharge conveyor, 20"x10' side discharge conveyor, Gara-Pagos 32"x6' magnetic separator, and 20" TBG pads, good condition with good undercarriage BR380JG-1E0

78 CC-02 2008 Cat C12 diesel engine and hydraulic drive, with approx. 36" impact crusher, approx. 10'x4' feed hopper with vibratory screen, 36"xapprox. 30' discharge conveyor, 36"x6' magnetic separator, wireless remote, and 20" TBG pads, good condition with good undercarriage FT4240

79 CMP-01 Plate Compactor BPU3345

80 D-08 1983 Crawler Tractor Komatsu 4 cylinder diesel engine and powershift transmission, with 6-way blade, ROPS canopy, and 23.5" SBG pads, fair condition with good undercarriage (1,335 hours - unreadable) D31P-17

D-11 1986 Crawler Tractor Komatsu 6 cylinder diesel engine and powershift transmission, with C-frame straight blade with manual angle, ROPS canopy, 24" SBG pads, and drawbar, fair condition with fair undercarriage (3,407 hours) D65E-8

D-14 1986 Crawler Tractor Komatsu 6 cylinder diesel engine and powershift transmission, with straight blade with manual angle, ROPS canopy, 26" SBG pads, and drawbar, fair condition with fair to good undercarriage (0,476 hours) D65E-8

D-16 1986 Crawler Tractor Cat 3306 diesel engine and powershift transmission with straight blade with tilt, ROPS post, 24" SBG pads, and drawbar, condition unknown (650 hours) (Machine D6H LGP

D-17 1986 Crawler Tractor Komatsu 6 cylinder diesel engine and powershift transmission, with straight blade with manual angle, differential steering, ROPS post, and 26" SBG pads, fair condition with fair to good "Komatsu
D65EX-12"

D-18 1999 Crawler Tractor Komatsu / Cummins diesel engine and powershift transmission, with 6-way blade, ROPS post with canopy, and 27.5" SBG pads, good condition with fair to good undercarriage D41P-6

D-19 1999 Crawler Tractor diesel engine and powershift transmission, with 4-way blade, ROPS canopy, and 20" SBG pads, good condition with poor to fair undercarriage (10,307 hours) (Sprockets Sharp; Pins Poor To Fair; Pads Low) (Less Than 100 Hours On In-House Transmission Rebuild; New Hydraulic Pump, Steering Clutches, & Brakes - Installation In Progress) (Appraised As Completed) D41P-6

D-20 2005 Crawler Tractor Deere 4 cylinder diesel engine and powershift transmission, with 6-way straight blade, differential steering, ROPS canopy, and 24" SBG pads, good condition with poor to fair undercarriage (meter reading not available) (Pins Worn Badly; Sprockets Sharp; Pads 450J LGP

D-21 2010 "Crawler Tractor 1T00764XVA0184270

Deere 6 cylinder diesel engine and hydrostatic transmission, with 6-way straight blade, dual rear hydraulic outlets, Trimble model CB460 GPS system, enclosed ROPS cab with air conditioning, (4) 24"" rubber crawlers, and drawbar, good condition with good undercarriage" 764 HSD

D-22 2013 Crawler Tractor Deere 6 cylinder diesel engine and powershift transmission, with 6-way blade, enclosed ROPS cab with air conditioning, Trimble GPS, 24" SBG pads, and drawbar, good condition with good undercarriage 750K XLT

DA-02 Rake Attachment 750K XLT

FL-02 1988 Forklift (Pneumatic Tired) 6 cylinder diesel engine and shuttle transmission, with 3-stage mast, 185" fork height, 72" forks, sideshift, FOPS canopy, and 7.00x15 front and 7.00x12 rear tires, good condition with good tires 02-3FD35, 7,500#

G-02 1984 Motor Grader Komatsu 6 cylinder diesel engine and 6 speed transmission, with 14' full hydraulic moldboard, front mounted multi-shank scarifier, enclosed ROPS cab, and 17.5-25 tires, fair condition with good tires (20,093 hours) GD605A-3

G-03 1973 Motor Grader (Maintainer) 3 cylinder diesel engine and hydrostatic transmission, with 9' hydraulic moldboard, 72" backfill blade, ROPS canopy, and 215/85R16 front and 23.1-26 rear tires, good condition with good tires (no hour meter) M-750

G-07 1971 Motor Grader Cat 6 cylinder diesel engine and powershift transmission, with 14' mechanical moldboard, ROPS canopy, and tires, poor condition with poor tires (meter reading not available) (4E

G-08 1986 Motor Grader Komatsu 6 cylinder diesel engine and powershift transmission, with 14' full hydraulic moldboard, front mounted scarifier, enclosed ROPS cab, wired for GPS, and 17.5x25 tires, good condition with very good tires (9,191 GD605A-3

G-09 1980 Motor Grader 4 cylinder diesel engine and hydrostatic transmission, with 9' hydraulic moldboard, 72" backfill blade, ROPS post, and 11L-15 front and 23.1-26 rear tires, fair condition with AB6905A

G-10 1999 Motor Grader diesel engine and powershift transmission, with 14' full hydraulic moldboard, front mounted scarifier, ROPS canopy with rear window, and 17.5x25 tires, good condition with good tires (meter reading not available - battery dead) 135H

G-11 1984 Motor Grader 4 cylinder diesel engine and hydrostatic transmission, with 9' hydraulic moldboard, 72" backfill blade, and 11L-16 front and 23.1-26 rear tires, good condition with good tires M-850-A

G-12 2012 Motor Grader Deere 6090HD diesel engine and powershift transmission, with 14' full hydraulic moldboard, front push block, front mounted multi-shank scarifier, Sonic curb tractor, slope sensor, Trimble model ST400 GPS system and robot system (auto controls), enclosed ROPS cab with air conditioning, heated mirrors and windows, and 17.5R25 tires, good condition with very 672GP

G-13 2013 Motor Grader Deere 6090HD diesel engine and powershift transmission, with 14' full hydraulic moldboard, front push block, front mounted multi-shank scarifier, Sonic curb tractor, slope sensor, Trimble model ST400 GPS system and robot system (auto controls), enclosed ROPS cab with air conditioning, heated mirrors and windows, and 17.5R25 tires, good condition with very 672GP

Gen-2 2006 Generator G25 / MGT1, 25KVA

Gen-2 2006 Generator G25, 25KVA

L-06 1996 Rubber Tired Loader Komatsu 6 cylinder diesel engine and powershift transmission, with general purpose loader bucket with bolt-on cutting edge, ROPS over enclosed cab, and 26.5x25 tires, fair to good condition with fair WA450-1

L-07 1985 Rubber Tired Loader Komatsu 6 cylinder diesel engine and powershift transmission, with general purpose loader bucket with bolt-on cutting edge, ROPS over enclosed cab, and 26.5x25 tires, fair to good condition WA500-1

L-12 1984 Rubber Tired Loader Komatsu S6D105-1 diesel engine and powershift transmission, with general purpose loader bucket with bolt-on cutting edge, ROPS post with canopy, and 20.5-25 tires, good condition with good tires (07,055 hours) WA300

L-13 1992 Rubber Tired Loader Komatsu / Cummins 6 cylinder diesel engine and powershift transmission, with general purpose loader bucket with bolt-on cutting edge, ROPS over enclosed cab, and 23.5-25 tires, good condition with good tires WA380-1

L-14 1994 Rubber Tired Loader Cat diesel engine and powershift transmission, with general purpose loader bucket with bolt-on cutting edge and fork brackets, enclosed ROPS cab, traction control, and 23.5x25 tires, good condition with good tires 950F

L-15 1998 Rubber Tired Loader Komatsu 6 cylinder diesel engine and powershift transmission, with general purpose loader bucket with bolt-on cutting edge, ROPS canopy, and 20.5x25 tires, good condition with fair tires (WA250-3L

L-16 1999 Rubber Tired Loader Komatsu 6 cylinder diesel engine and powershift transmission, with general purpose loader bucket with bolt-on cutting edge, enclosed ROPS cab, and 20.5x25 tires, good condition with good tires WA300L-3

L-17 1997 Rubber Tired Loader Cummins 6 cylinder diesel engine and powershift transmission, with general purpose loader bucket with bolt-on cutting edge, enclosed ROPS cab with air conditioning, and 23.5-25 tires, good condition with very good WA380-3L

L-18 2001 Rubber Tired Loader Komatsu diesel engine and powershift transmission, with highlift configuration, general purpose loader bucket with bolt-on cutting edge and fork brackets, enclosed ROPS cab with air conditioning, and 23.5x25 tires, good condition with good tires WA380-3MC

L-19 2005 Rubber Tired Loader Komatsu / Cummins 6 cylinder diesel engine and powershift transmission, with JRB general purpose loader bucket with bolt-on cutting edge, JRB 60" fork attachment, enclosed ROPS cab with air conditioning, and 20.5-25 tires, good condition with good tires (15,494 hours) (Pivot Point On Left Side Leaking) WA250-5L

L-20 2004 Rubber Tired Loader Komatsu 6 cylinder diesel engine and powershift transmission, with general purpose loader bucket with bolt-on cutting edge, ROPS over enclosed cab with air conditioning, and 29.5-25 tires, fair to good condition with WA500-3LK

L-21 2014 Rubber Tired Loader Komatsu 6 cylinder diesel engine and powershift transmission, with JRB general purpose loader bucket with bolt-on cutting edge, ride control, enclosed ROPS cab with backup camera and air conditioning, and 26.5R25 tires, good condition with good WA470-7

L-22 2013 Rubber Tired Loader Komatsu SAA6D107E-2 diesel engine and powershift transmission, with JRB general purpose loader bucket with bolt-on cutting edge, JRB 60" fork attachment, enclosed ROPS cab with backup camera and air conditioning, and 20.5R25 tires, good condition with good tires (003,160 hours) WA270-7

LT-01 2013 Light Plant (Portable) Kubota 3 cylinder diesel engine, with (4) lights, manual raise, and (2) manual stabilizers, trailer mounted with 175/80D13 tires, fair to good condition with good tires MH4000RL

LT-03 Light Plant (Portable) 3 cylinder diesel engine, with (4) lights, manual raise, and (3) manual stabilizers, trailer mounted with 175/80D13 tires, good condition with good tires

LT-04 Light Plant (Portable) Kubota 3 cylinder diesel engine, with (4) lights and manual raise, trailer mounted with 205/75D15 tires, fair to good condition with good tires (5,821 hours) (Addition To BCK64M11

PC-01 2001 Curb Machine Deutz BF4M1012 diesel engine and hydraulic drive, with 42" cutter head, 12'x12" discharge auger conveyor, and (3) 4'9" crawlers with 12" TBG pads, good condition with good undercarriage (00,976 hours 5700-B 03

PC-02 / PC-03 Roller Screed (3-Roll) Kubota 4 cylinder diesel engine (meter reads 0 hours), with Allen 30' traveling work bridge with spray system powered by Honda GX620 gas engine, good condition 255BD, 25'

PC-05 2005 Concrete Curb Machine 1 cylinder gas engine, good condition (Addition To List) PC150

PS-01 2004 Screening Plant Deutz 4 cylinder diesel engine and hydraulic drive, with 48'x12' belt feeder with hydraulic side boards, 5'x12' 2-deck vibratory screen, 46" front discharge conveyor, and (2) 28"x20' side discharge conveyor, good condition CD512

PVR-01 2012 Asphalt Paver Kubota V3600-ET05 diesel engine and hydrostatic transmission, with 8'-16' electric heated vibratory screed, Topcon GPS controls, and 14.00-20 tires, good condition with good tires (1,417 hours) PF150B
PVR-02 2015 Asphalt Paver Cat C4 diesel engine and hydraulic drive, with Carlson 8'-15' electric heated vibratory screed, GPS screed control, dual operator positions, washdown system, and 16.00x24 tires, good condition with good tires (1,847 hours) RP-170
R-03 1987 Vibratory Compactor 4 cylinder diesel engine and hydrostatic transmission, with 84" smooth drum, fair condition (meter inoperable) CA25S
R-04 1985 Vibratory Compacto Deutz 3 cylinder diesel engine and hydrostatic transmission, with 84" smooth drum, drum drive, and 23.1x26 tires, good condition with good tires (meter reading not available) RS58D
R-06 1986 Vibratory Compactor Detroit 4 cylinder diesel engine and hydrostatic transmission, with 84" smooth drum and 23.1-26 tires, fair to good condition (meter inoperable) CA25
R-07 1986 3-Wheel Roller Isuzu 4 cylinder diesel engine and hydrostatic transmission, with 41" front and 20" rear drums, and swing controls, good condition (1,298 hours) CS12
R-08 1987 Vibratory Compactor Detroit 4-53 diesel engine and hydrostatic transmission, with 84" smooth drum, drum drive, dual frequency vibration, and 23.1x26 tires, fair condition with poor tires (meter reading not available) (Engine Bad) RS58D
R-09 1986 Vibratory Compactor Detroit 4 cylinder diesel engine and hydrostatic transmission, with 84" smooth drum, drum drive, and tires, fair condition (0,482 hours) (Crack In Weld On Drum) CA25
R-13 1984 Vibratory Compactor Detroit 4 cylinder diesel engine and hydrostatic transmission, with 84" smooth drum, drum drive, dual frequency vibration, and 18x26 tires, good condition with good tires (no hour meter RS58D
R-18 1998 Tandem Vibratory Roller Deutz 3 cylinder diesel engine and hydrostatic transmission, with 39" smooth drums, dual drum drive, dual frequency vibration, water system, and ROPS post, good condition DD-24
R-20 2000 Vibratory Compactor Deutz 3 cylinder diesel engine and hydrostatic transmission, with 39" smooth drums, dual drum drive, dual frequency vibration, water system, and ROPS post, good condition SD100DB
R-21 2002 Vibratory Compactor Cummins 4 cylinder diesel engine and hydrostatic transmission, with 84" smooth drum, variable speed vibration, ROPS post with canopy, and 23.1-26 tires, good condition with very good tires (07,041 BW124D
R-22 2012 Vibratory Compactor Deutz F3L diesel engine and hydrostatic transmission, with 84" smooth drum, drum drive, dual speed vibration, ROPS canopy, and 23.1x26 tires, good condition with fair to good tires BW211D-40
R-23 2012 Vibratory Compactor BW211D-40
R-24 2002 9-Wheel Roller Cummins 4B3.9C diesel engine and hydrostatic transmission, with water system and 7.50x15 tires, good condition C530AH
R-25 2005 Tandem Vibratory Roller Deutz 4 cylinder diesel engine and hydrostatic transmission, with 79" smooth drums, variable frequency vibration, sliding operator seat and dual operator positions, and ROPS canopy, good condition (meter reading not available) (Both Drive Motor Housing Repair In Progress - Appraised As BW190AD4
R-26 2007 Tandem Vibratory Roller Cummins diesel engine and hydrostatic transmission, with 66" smooth drums, dual drum drive, dual frequency vibration, swing controls, water system, and ROPS canopy, good condition (02,118 hours) DD-90
R-27 2007 Tandem Vibratory Roller Cummins 4.5L diesl engine and hydrostatic transmission, with 56" smooth drums, dual drum drive, dual frequency vibration, water system, and ROPS canopy, good condition DD-70
R-28 2004 Tandem Vibratory Roller Honda 18.0 gas engine and hydrostatic transmission, with 35.5" smooth drums, water system, and ROPS post, good condition (0,878 hours) (List Indicates "With Trailer" - Trailer Not Viewed Or Valued) WP3100R

RO-17 1998 Tandem Vibratory Roller Deutz 3 cylinder diesel engine and hydrostatic transmission, with 51" smooth drum, dual drum drive, dual frequency vibration, and water system, good condition (2,952 hours) CC142
RO-19 1998 Tandem Vibratory Roller Deutz 3 cylinder diesel engine and hydrostatic transmission, with 47" smooth drums, single or dual drum vibration, water system, and ROPS post, fair to good condition (meter DD-24
RS-01 2005 Soil Stabilizer / Recycler Deutz 6 cylinder diesel engine and hydrostatic transmission, with 88" cutter head and 260/75R26 front and 28LR26 rear tires, good condition with very good tires (02,768 hours) MPH122
W-01 Welder / Generator (Portable) Isuzu 3 cylinder diesel engine, trailer mounted with 175/80D13 tires, good condition with good tires (6,193 hours) (Serial Number DCI-300SSI
W-0 Welder / Generator (Portable) Isuzu 3 cylinder diesel engine (Duplicate MBI No.) (Parts Machine - Not Running Whisperweld DCI-300SSI
WP-01 Wellpoint Jetting Pump Deutz 5 cylinder diesel engine, skid mounted, condition unknown (1,489 hours) 4"
WP-04 Centrifugal Pump Honda GX240 gas engine, good condition (Addition To List) 3"
WT-01 Water Truck - T/A Cummins Big Cam 400HP diesel engine and automatic transmission, with 8,000 gallon steel tank body with 4" hydraulic pump and (4) spray heads, walking beam suspension, and 14.00x24 tires, poor condition with fair tires (odometer reading not available) (Transmission Bad) (Off-Road Use Only) (VIN#
WT-02 2006 Articulated Water Truck - 6x6 Cat C11 Acert diesel engine and powershift transmission, with 5,000 gallon water body with hydraulic pump, (5) air actuated spray heads, water cannon, and rear hose reel, and 23.5x25 tires, good condition with very good tires (11,287 730E
2007 Pneumatic Drill - Self-Propelled good condition 210-4SRA, 4-Gang
2015 Lowboy Trailer - Tri/A 30' level deck, fixed gooseneck, 8'4" upper deck, 5' transition ramp, 48"beavertail with 7' ramps, 114" width, spring suspension, tie downs, and 255/70R22.5 tires, very good condition with very good tires LB52-38CS
n/a Fuel Storage Tank 2-compartment (6,000 each), double wall, with (2) Gasboy fuel pumps and (2) cradles, good condition 12,000 Gallon
2004 Hydraulic Pile Driver EMV300A
2014 Stacking Conveyor (Portable) 7'x6' feed hopper and 8-14.5 tires, good condition with good tires CH50-30-D, 30"x50'
n/a Air Compressor In Use & Appraised With MBI No. M-05) Single Stage
Dipper Stick 10'
n/a Rover & Receiver (In Use & Appraised With MBI No. M-89) n/a
n/a Tracer (In Use & Appraised With MBI No. G-12) n/a
2014 GRADALL XL3300 III TELESCOPIC EXCAVATOR XL3300 III
1420 1995 MAGNUM LIGHT TOWER
2016 I.C.E. 50B VIBRATORY HAMMER 50B
2016 I.C.E. 595G-V2 POWER PACK w/ CAT C15 DIESEL ENG. 595G-V2
2016 I.C.E. 140C - 140 TON CLAMP w/ DOUBLE SHEETING JAW INSERTS 140C
2016 I.C.E. CAISSON BEAM - CAISSON CAPABILITY OF 15" - 6' 6" DIAMETER
2016 I.C.E. MODEL 105 DUAL CAISSON CLAMPS w/ 105 TONS OFÂ Â Â Â Â Â Â Â Â CLAMPING FORCE MODEL 105
2014 John Deere 744K 744K 4WD Loader
2007 JRB 5.25 Yd Bucket
2016 TRM Manufacturing, Inc. 106 106X72 Forks
2002 Hopper Barge ML4
2 Control boxes L&R, 4 sensors PCS-400
Ice Machine
9,240 L.F. of steel forms from 4" to 24" @ $5.00 per L.F.
Grapple PC-400 or 300

Grapple PC-220
Bucket PC-400
Ugly Bucket PC-750
Ugly Bucket PC-750
Big Bucket PC-750
Big Bucket PC-750
Bucket PC-300
Bucket PC-300
Bucket PC-300
Bucket PC-220
Bucket PC-220
Bucket PC-220
Bucket CAT 416
Bucket CAT 416
Bucket CAT 416
Bucket CAT 416
Vibratory Compaction bucket 30 x 70
MACKWORTH TURBITY CURTAIN SYSTEM
SNR Radio Trimble SPS Base Receiver
TP-L5G/L Pipe Laser (Lengeman)
Steel Sheet Piling weighed on scales @59,440 lbs. x 40 cents
Trucks and Vehicles
M-031 T FONTAINE RIGID NECK LOWBOY TRAILER 21'8" LEVEL DECK LBT-2-3532
M-034 T 2001 HOOPER TAG-A-LONG TRAILER 20' LEVEL DECK
M-036 T 2009 TRAIL-EZE HYDRAULIC TAIL TRAILER 30'3" LEVEL DECK TE70HT
M-039 T 2007 LOUDO TAG-A-LONG TRAILER 16' LEVEL DECK
M-043 HT 2001 CHEVROLET FLATBED TRUCK CAT 3126 W/ 24' STEEL FLATBED C6500
M-045 MT 1996 CHEVROLET UTILITY TRUCK 11' SERVICE BODY Cheyenne 350
M-050 HT 2001 INTERNATIONAL VAC TRUCK 4700
M-051 T 1999 ETNYRE DETACHABLE LOWBOY TRAILER 23'6" LEVEL DECK, 27" PRTN50TD3-T1
M-053 MT 2000 FORD TRUCK POWERSTROKE F-450 Super Duty
M-054 LT 2008 FORD SUV Explorer
M-056 LT 2006 CHEVROLET PICKUP TRUCK 6'6" BED 2500HD Extended Cab
M-057 MT 1999 FORD FLATBED W/ 10'9" STEEL FLATBED F-350 Super Duty
M-061 LT 1997 FORD FLATBED TRUCK WITH 8'6" STEEL STAKE BED F-350XL Crew Cab
M-062 LT 1997 FORD TRUCK F-250 Super Duty
M-063 HT 1988 INTERNATIONAL WATER TRUCK 1,500 GALLON STEEL TANK 1654
M-068 T 1988 SHOPMADE TAG-A-LONG TRAILER
M-070 MT 1994 CHEVROLET FLATBED TRUCK W/ 10'6" STEEL FLATBED Tiltmaster
M-072 MT 1999 FORD FLATBED TRUCK F-350 Super Duty
M-073 LT 2002 CHEVROLET PICKUP TRUCK Silverado 2500HD Crew Cab
M-074 HT 1989 INTERNATIONAL TRACTOR S2300
M-075 T 2002 FONTAINE FLATBED TRAILER 40'
M-076 MT 2003 CHEVROLET ISUZU 3500 3500
M-077 LT 2003 CHEVROLET SILVERADO Silverado 2500HD
M-078 MT 2003 FORD TRUCK F-350XL F-350XL Super Duty
M-079 LT 2003 CHEVROLET PICK UP TRUCK W/ 8' BED Silverado 2500HD
M-080 PPV 2003 CHEVROLET SUV Trailblazer
M-084 LT 1995 CHEVROLET - PICKUP TRUCK Silverado 1500
M-085 MT 1997 FORD TRUCK F-350XL
M-089 LT 2006 CHEVROLET PANEL VAN 2500
M-090 LT 2005 CHEVROLET PANEL 8 PASSENGER SEATING 2500 Express

M-091 PPV 2006 CHEVROLET SUV Equinox LT
M-098 LT 2009 Chevrolet Pickup Truck Traverse
M-099 LT 2010 Toyota Pickup Truck Tundra Crew Cab
M-100 LT 2013 Chevrolet Pickup Truck Silverado 1500LT Extended Cab
M-101 LT 2013 Chevrolet Pickup Truck Silverado 1500 Extended Cab
M-102 LT Chevrolet Pickup Truck "
Silverado 1500 Crew Cab
"
M-103 LT Chevrolet Pickup Truck "
Silverado 1500 Crew Cab
"
M-104 PPV 2014 Porsche Sport Utility Vehicle - AWD Cayenne
M-105 PPV 2014 Chevrolet Sport Utility Vehicle Equinox LS
M-106 PPV 2014 Chevrolet Sport Utility Vehicle Equinox LS
M-108 HT 2008 Ford Water Truck F-650XL Super Duty
M-109 LT 2014 Chevrolet Sport Utility Vehicle Equinox LS
M-110 LT 2014 Ford Pickup Truck F-150 Crew Cab
M-112 HT 1994 Freightliner Fuel & Lube Truck Cummins FL80
M-113 PPV 2014 Chevrolet Sport Utility Vehicle Equinox LS
M-114 PPV 2014 Chevrolet Sport Utility Vehicle Equinox LS
M-115 MT 2008 Ford Cab & Chassis Powerstroke F-550XL Super Duty Crew Cab
M-116 MT 2014 Isuzu Cone Distributor Truck Isuzu NPRHD
M-117 HT 2015 Ford Asphalt Distributor Cummins F-750XL Super Duty
M-118 MT 2014 Isuzu Flatbed Truck Isuzu NPR
M-119 HT 2013 Mack Fuel & Lube Truck Mack MP8-505C CHU613
M-120 LT 2008 Ford Utility Truck 4.6L F-150XL Extended Cab
M-121 LT 2007 Ford Pickup Truck 4.6L F-150
M-122 MT 2016 Dodge Ram Cummins 6.7L 5500HD Crew Cab
M-209 MT Mack Cab & Chassis Cummins 6.7L DM487S
M-220 MT Mack Water Truck U685ST
M-221 HT 1993 Mack Dump Truck - T/A Mack EM7-300, DM690S
M-222 HT 1993 Mack Water Truck - T/A Mack Mack EM7-300 DM690S
M-223 HT 1993 Mack Dump Truck - T/A Mack EM7-300 DM690S
M-225 HT 1993 Mack Water Truck Mack EM7-300 DM690S
M-226 HT 1993 Mack Dump Truck Mack EM7-300 DM690S
M-227 HT 1994 Mack Truck Tractor - T/A Mack E-7 RD685S
M-228 HT 1999 Mack Dump Truck - T/A Mack EM7-300 DM690S
M-229 HT 1999 Mack Dump Truck - T/A Mack EM7-300 DM690S
M-230 HT 2000 Freightliner Dump Truck - T/A Cat C-12 FLD11264SD
M-232 HT 2003 Mack Dump Truck - T/A Mack E7 DM690S
M-233 HT 2003 Mack Dump Truck DM690S
M-234 HT 2017 Freightliner Truck Tractor 122SD
M-243 PPV 2017 Jeep Grand Cherokee
M-242 PPV 2017 Jeep Grand Cherokee
553 EHT 2017 Caterpillar CT660L Triaxle Dump Truck
1419 MT 2016 Ford F550
1454 HT 2004 INTERNATIONAL 4300 FLAT BED TRUCK 4300
1455 HT 2004 INTERNATIONAL 4300 UTILITY TRUCK w/ FRONT CAPSTAN WINCH 4300
1456 HT 2005 INTERNATIONAL 4200 UTILITY TRUCK 4200
1460 HT 1998 FORD LT9513 VACTOR TRUCK w/ 4,000 GAL. TANK & PUMP LT9513
1461 HT 1995 FREIGHTLINER FLD120 T/A - 18' FLAT BED TRUCK FLD120
1462 EHT 2006 INTERNATIONAL 7400 T/A w/ VACTOR 2112-824RCS-16 - SEWER & JET RODDER SYSTEM 7400

1434 MT 2017 GMC Sierra 3500
1435 MT 2017 GMC Sierra 3500
1436 MT 2017 GMC Sierra 3500
1438 MT 2017 GMC Sierra 3500
EHT 1998 INTERNATIONAL 4900 - WATER TRUCK w/ ALLIED 3,000 GAL. TANK 4900
EHT 1995 INTERNATIONAL 4900 - WATER TRUCK w/ ALLIED 3,000 GAL. TANK 4900
HT 2018 Peterbilt single axle mason dumps
HT 2018 Peterbilt single axle mason dumps
LT 2017 GMC 1500 Double cab SLE
PPV 2017 Jeep Grand Cherokee Limited
MT GMC 3500 HD w/ Utility Body

4. What equipment will you purchase for the proposed work?
   TBD

5. What equipment will you rent for the proposed work?
   TBD

TRENCH SAFETY

Bidder acknowledges that included in the appropriate bid items of his bid and in the Total Bid Price are costs for complying with the Florida Trench Safety Act, Florida Statutes 553.60 – 553.64. The bidder further identifies the costs of such compliance to be summarized below:

Trench Safety Measure (Description)	Units of Measure (LF/SF)	Unit (Quantity)	Unit Cost	Extended Cost
A. **Shoring Trench**	**LF**	**15000**	**$1.5**	**$15000**
B. **Open Trench**	**LF**	**5000**	**$1.0**	**$5000**
C.			$	$
D.			$	$

Total: **$20000**

The bidder certifies that all trench excavation done within his control in excess of five feet (5') in depth shall be in accordance with the Occupational Safety and Health Administration's excavation safety standards, C.F.R. s. 1926.650 Subpart P., and the Florida Trench Safety Act, Florida Statutes 553.60-553.64.

Failure to complete the above may result in the bid being declared non-responsive.

DATE: **11/02/2020** **Danny Garcia**
(SIGNATURE)

STATE OF: **Florida**COUNTY OF: **Miami-Dade**

PERSONALLY APPEARED BEFORE ME, the undersigned authority,

Danny Garcia
(Name of Individual Signing)

Danny Garciawho, after first being duly sworn by me,
Alicia Lafond Navarroaffixed his/her signature in the space provided above on this **2nd**day of **November**, 20**20**.

Alicia Lafond Navarro
NOTARY PUBLIC

My Commission Expires: **08/29/2024**

NON-COLLUSION STATEMENT:

By signing this offer, the vendor/contractor certifies that this offer is made independently and *free* from collusion. Vendor shall disclose below any City of Fort Lauderdale, FL officer or employee, or any relative of any such officer or employee who is an officer or director of, or has a material interest in, the vendor's business, who is in a position to influence this procurement.

Any City of Fort Lauderdale, FL officer or employee who has any input into the writing of specifications or requirements, solicitation of offers, decision to award, evaluation of offers, or any other activity pertinent to this procurement is presumed, for purposes hereof, to be in a position to influence this procurement.

For purposes hereof, a person has a material interest if they directly or indirectly own more than 5 percent of the total assets or capital stock of any business entity, or if they otherwise stand to personally gain if the contract is awarded to this vendor.

In accordance with City of Fort Lauderdale, FL Policy and Standards Manual, 6.10.8.3,

3.3. City employees may not contract with the City through any corporation or business entity in which they or their immediate family members hold a controlling financial interest (e.g. ownership of five (5) percent or more).

3.4. Immediate family members (spouse, parents and children) are also prohibited from contracting with the City subject to the same general rules.

Failure of a vendor to disclose any relationship described herein shall be reason for debarment in accordance with the provisions of the City Procurement Code.

NAME	RELATIONSHIPS

In the event the vendor does not indicate any names, the City shall interpret this to mean that the vendor has indicated that no such relationships exist.

Danny Garcia Authorized Signature	**Vice President** Title
Danny Garcia Name (Printed)	**10/30/2020** Date

CONTRACTOR'S CERTIFICATE OF COMPLIANCE WITH NON-DISCRIMINATION PROVISIONS OF THE CONTRACT

The completed and signed form should be returned with the Contractor's submittal. If not provided with submittal, the Contractor must submit within three business days of City's request. Contractor may be deemed non-responsive for failure to fully comply within stated timeframes.

Pursuant to City Ordinance Sec. 2-187(c), bidders must certify compliance with the Non-Discrimination provision of the ordinance.

The Contractor shall not, in any of his/her/its activities, including employment, discriminate against any individual on the basis of race, color, national origin, religion, creed, sex, disability, sexual orientation, gender, gender identity, gender expression, or marital status.

1. The Contractor certifies and represents that he/she/it will comply with Section 2-187, Code of Ordinances of the City of Fort Lauderdale, Florida, as amended by Ordinance C-18-33 (collectively, "Section 2-187").
2. The failure of the Contractor to comply with Section 2-187 shall be deemed to be a material breach of this Agreement, entitling the City to pursue any remedy stated below or any remedy provided under applicable law.
3. The City may terminate this Agreement if the Contractor fails to comply with Section 2-187.
4. The City may retain all monies due or to become due until the Contractor complies with Section 2-187.
5. The Contractor may be subject to debarment or suspension proceedings. Such proceedings will be consistent with the procedures in section 2-183 of the Code of Ordinances of the City of Fort Lauderdale, Florida.

Danny Garcia
Authorized Signature

Danny Garcia - Vice President
Print Name and Title

10/11/2020
Date

CONTRACT PAYMENT METHOD

The City of Fort Lauderdale has implemented a Procurement Card (P-Card) program which changes how payments are remitted to its vendors. The City has transitioned from traditional paper checks to credit card payments via MasterCard or Visa as part of this program.

This allows you as a vendor of the City of Fort Lauderdale to receive your payments fast and safely. No more waiting for checks to be printed and mailed.

In accordance with the contract, payments on this contract will be made utilizing the City's P-Card (MasterCard or Visa). Accordingly, bidders must presently have the ability to accept these credit cards or take whatever steps necessary to implement acceptance of a card before the start of the contract term, or contract award by the City.

All costs associated with the Contractor's participation in this purchasing program shall be borne by the Contractor. The City reserves the right to revise this program as necessary.

By signing below you agree with these terms.

Please indicate which credit card payment you prefer:

☑ MasterCard

☐ Visa

Ferreira Construction Southern Division
Company Name

Danny Garcia
Name (Printed)

11/02/2020
Date

Danny Garcia
Signature

Vice President
Title

CONSTRUCTION BID CERTIFICATION

Please Note: It is the sole responsibility of the bidder to ensure that his bid is submitted electronically through www.BidSync.com prior to the bid opening date and time listed. Paper bid submittals will not be accepted. All fields below must be completed. If the field does not apply to you, please note N/A in that field.

If you are a foreign corporation, you may be required to obtain a certificate of authority from the Department of State, in accordance with Florida Statute §607.1501 (visit http://www.dos.state.fl.us/).

Company: (Legal Registration) **Ferreira Construction Southern Division Co., Inc**

Address: **9455 NW 104th street**

City: **Medley**State: **FL**Zip: **33178**

Telephone No.: **305.805.6900**FAX No.: **786.558.1179**Email: **JBaez@ferreiraconstruction.com**

Check box if your firm qualifies for MBE / SBE / WBE: ☐

If a corporation, state the name of the President, Secretary and Resident Agent. If a partnership, state the names of all partners. If a trade name, state the names of the individuals who do business under the trade name.

Nelson Ferreira	**President**		
Name	**Title**	**Name**	**Title**
Lou Pacheco	**Secretary**		
Name	**Title**	**Name**	**Title**

ADDENDUM ACKNOWLEDGEMENT - Bidder acknowledges that the following addenda have been received and are included in the proposal:

Addendum No.	Date Issued	Addendum No.	Date Issued	Addendum No.	Date Issued
N/A	**N/A**				

VARIANCES: If you take exception or have variances to any term, condition, specification, or requirement in this bid you must specify such variance in the space provided below or reference in the space provided below all variances contained on other pages within your bid. Additional pages may be attached if necessary. No variances will be deemed to be part of the bid submitted unless such is listed and contained in the space provided below. The City does not, by virtue of submitting a variance, necessarily accept any variances. If no statement is contained in the below space, it is hereby implied that your response is in full compliance with this competitive solicitation. If you do not have variances, simply mark N/A. **You must also click the "Take Exception" button.**
N/A

The below signatory affirms that he has or will obtain all required permits and licenses from the appropriate agencies, and that his firm is authorized to do business in the State of Florida. The below signatory agrees to furnish all labor, tools, material, equipment and supplies, and to sustain all the expense incurred in doing the work set forth in strict accordance with the bid plans and contract documents at the unit prices indicated if awarded a contract. The below signatory has not divulged to, discussed, or compared this bid with other bidders, and has not colluded with any other bidder or parties to this bid whatsoever. Furthermore, the undersigned guarantees the truth and accuracy of all statements and answers contained in this bid. The below signatory also hereby agrees, by virtue of submitting or attempting to submit a bid, that in no event shall

the City's liability for bidder's direct, indirect, incidental, consequential, special or exemplary damages, expenses, or lost profits arising out of this competitive solicitation process, including but not limited to public advertisement, bid conferences, site visits, evaluations, oral presentations, or award proceedings exceed the amount of Five Hundred Dollars ($500.00). This limitation shall not apply to claims arising under any provision of indemnification or the City's protest ordinance contained in this competitive solicitation.

Submitted by:

Jorge Baez Name (printed)	**Jorge Baez** Signature
10/30/2020 Date	**Chief Estimator** Title

Revised 4/28/2020

Solicitation 12453-613

Las Olas Isles Undergrounding of Overhead Utilities (P11715)

Bid Designation: Public

CITY OF FORT LAUDERDALE

City of Fort Lauderdale

Bid 12453-613
Las Olas Isles Undergrounding of Overhead Utilities (P11715)

Bid Number	**12453-613**
Bid Title	**Las Olas Isles Undergrounding of Overhead Utilities (P11715)**
Bid Start Date	**Sep 30, 2020 8:47:54 AM EDT**
Bid End Date	**Nov 3, 2020 2:00:00 PM EST**
Question & Answer End Date	**Oct 23, 2020 5:00:00 PM EDT**
Bid Contact	**Maureen Lewis, MBA, CPPB** **Senior Procurement Specialist** **Finance** **954-828-5239** **maureenl@fortlauderdale.gov**
Contract Duration	**One Time Purchase**
Contract Renewal	**Not Applicable**
Prices Good for	**120 days**

Bid Comments

The City of Fort Lauderdale, Florida (City) is seeking bids from qualified bidders, hereinafter referred to as the Contractor, to provide construction services in accordance with the terms, conditions, and specifications contained in this Invitation To Bid (ITB).
Sealed bids will be received electronically until 2:00 p.m., local time, on TUESDAY, NOVEMBER 3, 2020, and opened online immediately thereafter for BID NO., 12453-613, PROJECT NO.,11715, LAS OLAS ISLES UNDERGROUNDING OF OVERHEAD UTILITIES.

All openings will be held on the BIDSYNC.COM platform. Once the Procurement Specialist opens the solicitation, the bid tabulations may be viewed immediately on a computer, laptop, cell phone, or any other device with WiFi access. The opening may also be viewed in real time through a "Zoom meeting" or similar type platform by using the following information:

Join Zoom Meeting

Phone one-tap: US: +16692545252,,1607737432#,,1#,346922# or
+16468287666,,1607737432#,,1#,346922#

Meeting URL: https://fortlauderdale.zoomgov.com/j/1607737432?pwd=ZDltbE03NUluWkdsNkpBNDJtTytYQT09

Meeting ID:: 160 773 7432
Password: 346922

Join by Telephone
For higher quality, dial a number based on your current location.
Dial: US: +1 669 254 5252 or +1 646 828 7666
Meeting ID:: 160 773 7432
Password: 346922

Anyone requesting assistance or having further inquiry in this matter must contact the Procurement Specialist indicated on the solicitation, via the question and Answer forum on Bidsync.com before the Last Day for Questions indicated in the Solicitation.

Bidders are strongly encouraged to study the entire Bid Package in detail before submitting their bids.

This Project consists of Drawing File No., 4-136-94, fifty (50) sheets.

The Project is located in an area known as "Las Olas Isles." It is bounded by Las Olas Boulevard on the North, New River on the South, Isles of Palm Drive on the East and Mola Avenue to the West.

Intent of Bid:
The intent of this Bid is to award a one-time contract for the conversion of existing overhead electric and communication utilities from overhead to underground in the area known as Las Olas Isles (also known as Area B) to the lowest responsive and responsible bidder.

Scope of Work - Individual Entity
Generally, all work related to various entities shall conform to their specified standards. Where no standards are specified, they shall meet the latest Florida Building Code (FBC) or as directed by the City's Public Works Director or his designee.

FPL : All work related to FPL shall conform to their construction plans and standards. Their "Standards and Specification" are attached under Technical Specifications. FPL will supply all material, equipment, accessories, etc. and the Contractor shall be responsible for their proper installation, acceptable to FPL. Specifically, the Contractor shall, to FPL's satisfaction:

1) Install conduits and concrete products based on the FPL Specifications and in the locations as indicated on the attached plans/drawings;
2) Install cable, transformers, switch pads including, the primary and secondary terminations and connections. FPL will be responsible for coordinating the energization and connection of the new underground circuit(s) to the existing FPL electrical system;
3) FPL will be responsible for removing their facilities after the undergrounded utility is energized and all attachments are removed from the poles.

Comcast : All work related to Comcast shall conform to their construction plans and standards. Unlike FPL, Comcast will provide and install their own material, equipment, accessories, etc. Contractor is responsible for installing conduits and related facilities.

ATT: All work related to ATT shall conform to their construction plans and standards. Unlike FPL, ATT will provide and install their own material, equipment, accessories, etc. Contractor is responsible for installing conduits and related facilities

Additional Work - Overhead to Underground Service Conversions for Individual Properties: The Bidder shall include in the bid price all costs associated with the modifications of services to customers affected by this Project. That includes arranging the conversion of overhead customer service (meter can) to an underground lateral (installation of the trench and conduit) that is to be tied into the new underground system. These modifications must be completed by a licensed electrical contractor in accordance with all codes and FPL specs. The Contractor shall be responsible to trench and install FPL provided conduit including backfilling and landscape/pavement repairs along with the conversion of the meter can. FPL is responsible to install the cable and connect it to the new underground system. This service work is also to be coordinated with the local service planning office or by your qualified contractor using the appropriate notification/coordination.

Costs associated with 3-phase are not a part of this Project scope. However, installation of 3-phase may be negotiated with the individual property owner separately, provided there is no conflict of interest with the City's Project. Refer to Detailed Scope of Work for more details.

Construction Plans
The City intends to award one single contract as described under the headings of Scope of Work – General and Scope of Work – Individual Entity. Although every effort has been made to provide workable construction plans as received from FPL, Comcast and ATT, the bidders shall account for in their pricing, minor adjustment of work or minor adjustments in placement of mounting pads and equipment, for no additional cost to the City. The plans have been prepared based on the best information available to the City and shall serve as a guide only. The Contractor shall be responsible for verifying all information, conflicts and layout prior to starting the work. A close coordination with the City's Project Manager is required.

NOTE: Payment on this contract will be made by Visa or MasterCard.

Licensing Requirements: All undergrounding work shall be performed by contractors who are pre-qualified by FPL and who have successfully completed similar type of undergrounding projects preferably in the local Tri-County area comprising of Palm Beach, Broward and Miami-Dade counties. Any non-undergrounding work shall be performed by a licensed General Contractor in the State of Florida. The City may, at its discretion, allow a Registered Contractor in Broward County, to perform non-undergrounding work, and who can demonstrate successful completion of similar type of work.

Pre-Bid Meeting/Site visit: There will not be a pre-bid meeting or site visit for this Invitation to Bid.
However, it will be the sole responsibility of the bidder to inspect the City's location(s) and become familiar with the scope of the City's requirements and systems prior to submitting a proposal. No variation in price or conditions shall be permitted based upon a claim of ignorance. Submission of a proposal will be considered evidence that the proposer has familiarized himself with the nature and extent of the work, equipment, materials, and labor required.

Drawing Plans: Drawing plans may be obtained **free of charge** at BIDSYNC.COM.

Bid Security : A bid bond for **FIVE percent (5%)** of the bid amount shall accompany each proposal.

Bid Bonds:

Bidders can submit bid bonds for projects **two** different ways.

1) BidSync allows bidders to submit bid bonds electronically directly through their system using **Surety 2000.** For more information on this feature and to access it, contact BIDSYNC customer care department.

2) If bid bonds are not submitted via Surety 2000, Bidders may upload their original executed bid bond on Bidsync to accompany their bids with the electronic proposal. Bid bond shall be written by a surety insurer authorized to do business in the State of Florida as surety, in accordance with Section 255.05, Florida Statutes.
Insufficient bid bond surety shall automatically constitute a failure on the part of the Contractor and shall be grounds for rejection of your bid.

It will be the sole responsibility of the bidder to ensure that his bid is submitted prior to the bid opening date and time listed. **PAPER BID SUBMITTALS WILL NOT BE ACCEPTED. BIDS MUST BE SUBMITTED ELECTRONICALLY VIA BIDSYNC.COM**

The City of Fort Lauderdale reserves the right to waive any informality in any or all bids and to reject any or all bids.

For information concerning technical specifications, please utilize the Question/Answer platform provided by BIDSYNC at www.bidsync.com. Questions of a material nature must be received prior to the cut-off date specified in the solicitation. Material changes, if any, to the scope of services or bidding procedures, will only be transmitted by written addendum. (See addendum section of BIDSYNC Site). **Bidders please note:** No part of your bid can be submitted via FAX. No variation in price or conditions shall be permitted based upon a claim of ignorance. Submission of a bid will be considered evidence that the bidder has familiarized himself with the nature and extent of the work, equipment, materials, and labor required. The entire bid response must be submitted in accordance with all specifications contained in this solicitation.

Information on bid results and projects currently out to bid can be obtained on the City's website – http://www.fortlauderdale.gov/departments/finance/procurement-services. For general inquiries, please call (954) 828-5933.

Item Response Form

Item	**12453-613-01-01 - BASE BID: Mobilization [Price not to exceed 5% of Bid Amount]**
Lot Description	**BASE BID**
Quantity	**1 lump sum**
Unit Price	
Delivery Location	**City of Fort Lauderdale** See ITB Specifications See ITB Specifications Fort Lauderdale FL 33301 **Qty** 1

Description
Furnish all materials, labor and equipment

Item	**12453-613-01-02 - BASE BID: Demobilization [Price not to exceed 5% Bid Amount]**
Lot Description	**BASE BID**

Quantity	**1 lump sum**
Unit Price	
Delivery Location	**City of Fort Lauderdale** See ITB Specifications See ITB Specifications Fort Lauderdale FL 33301 **Qty** 1

Description
Furnish all materials, labor and equipment

Item	**12453-613-01-03 - BASE BID: Install FPL Pad, Boxes and Chambers 6-inch Single Phase Transformer Pad Complete**
Lot Description	**BASE BID**
Quantity	**10 each**
Unit Price	
Delivery Location	**City of Fort Lauderdale** See ITB Specifications See ITB Specifications Fort Lauderdale FL 33301 **Qty** 10

Description
Furnish all materials, labor and equipment to install FPL 6-inch Single Phase Transformer Pad Complete (includes all site and conduit work).

Item	**12453-613-01-04 - BASE BID: Install FPL Pad, Boxes and Chambers 24-inch Single Phase Transformer Pad Complet**
Lot Description	**BASE BID**
Quantity	**107 each**
Unit Price	
Delivery Location	**City of Fort Lauderdale** See ITB Specifications See ITB Specifications Fort Lauderdale FL 33301 **Qty** 107

Description
Furnish all materials, labor and equipment to install FPL 24-inch Single Phase Transformer Pad Complete (includes all site and conduit work).

Item	**12453-613-01-05 - BASE BID: Install FPL Pad, Boxes and Chambers 6-inch Open Delta Transformer Pad Complete**
Lot Description	**BASE BID**
Quantity	**1 each**
Unit Price	
Delivery Location	**City of Fort Lauderdale** See ITB Specifications See ITB Specifications Fort Lauderdale FL 33301 **Qty** 1

Description

Furnish all materials, labor and equipment to install FPL 6-inch Open Delta Transformer Pad Complete (includes all site and conduit work).

Item	**12453-613-01-06 - BASE BID: Install FPL Pad, Boxes and Chambers 24-inch Three Phase Pad Complete**
Lot Description	**BASE BID**
Quantity	**2 each**
Unit Price	
Delivery Location	**City of Fort Lauderdale** See ITB Specifications See ITB Specifications Fort Lauderdale FL 33301 **Qty** 2

Description
Furnish all materials, labor and equipment to install FPL 24-inch Three Phase Pad Complete (includes all site and conduit work).

Item	**12453-613-01-07 - BASE BID: Install FPL Pad, Boxes and Chambers 6-inch Three Phase Pad Complete**
Lot Description	**BASE BID**
Quantity	**1 each**
Unit Price	
Delivery Location	**City of Fort Lauderdale** See ITB Specifications See ITB Specifications Fort Lauderdale FL 33301 **Qty** 1

Description
Furnish all materials, labor and equipment to install FPL 6-inch Three Phase Pad Complete (includes all site and conduit work).

Item	**12453-613-01-08 - BASE BID: Install FPL Pad, Boxes and Chambers 69-inch x 79-inch x 40-inch Vista Switch Cha**
Lot Description	**BASE BID**
Quantity	**7 each**
Unit Price	
Delivery Location	**City of Fort Lauderdale** See ITB Specifications See ITB Specifications Fort Lauderdale FL 33301 **Qty** 7

Description
Furnish all materials, labor and equipment to install FPL 69-inch x 79-inch x 40-inch Vista Switch Chamber Assembly Complete (includes all assembly, site and conduit work).

Item	**12453-613-01-09 - BASE BID: Install FPL Pad, Boxes and Chambers 5-feet x 10-feet Feeder Splice Box Complete**
Lot Description	**BASE BID**
Quantity	**4 each**
Unit Price	
Delivery Location	**City of Fort Lauderdale**

See ITB Specifications
See ITB Specifications
Fort Lauderdale FL 33301
Qty 4

Description
Furnish all materials, labor and equipment to install FPL 5-feet x 10-feet Feeder Splice Box Complete with Lids (includes all transportation, site and conduit work).

Item	**12453-613-01-10 - BASE BID: Install FPL Pad, Boxes and Chambers 48-inch Polymer Primary Pull Box Complete**
Lot Description	**BASE BID**
Quantity	**9 each**
Unit Price	
Delivery Location	**City of Fort Lauderdale** See ITB Specifications See ITB Specifications Fort Lauderdale FL 33301 **Qty** 9

Description
Furnish all materials, labor and equipment to install FPL 48-inch Polymer Primary Pull Box Complete (includes all site and conduit work).

Item	**12453-613-01-11 - BASE BID: Install FPL Pad, Boxes and Chambers 30-inch polymer Service Hand-hole Complete**
Lot Description	**BASE BID**
Quantity	**14 each**
Unit Price	
Delivery Location	**City of Fort Lauderdale** See ITB Specifications See ITB Specifications Fort Lauderdale FL 33301 **Qty** 14

Description
Furnish all materials, labor and equipment to install FPL 30-inch polymer Service Hand-hole Complete (includes all site and conduit work).

Item	**12453-613-01-12 - BASE BID: Install FPL Pad, Boxes and Chambers Driveway Loading Rated 30-inch Splice Box**
Lot Description	**BASE BID**
Quantity	**92 each**
Unit Price	
Delivery Location	**City of Fort Lauderdale** See ITB Specifications See ITB Specifications Fort Lauderdale FL 33301 **Qty** 92

Description
Furnish all materials, labor and equipment to install FPL Driveway Loading Rated 30-inch Splice Box (includes all excavation, placing, and conduit work).

Item	**12453-613-01-13 - BASE BID: Install FPL Pad, Boxes and Chambers Driveway Loading Rated 50-inch Splice Box**
Lot Description	**BASE BID**
Quantity	**15 each**
Unit Price	
Delivery Location	**City of Fort Lauderdale** See ITB Specifications See ITB Specifications Fort Lauderdale FL 33301 **Qty** 15

Description
Furnish all materials, labor and equipment to install FPL Driveway Loading Rated 50-inch Splice Box (includes all excavation, placing, and conduit work).

Item	**12453-613-01-14 - BASE BID: Install FPL Directional Boring Directional Bore Machine Setup with Pits Complete**
Lot Description	**BASE BID**
Quantity	**250 each**
Unit Price	
Delivery Location	**City of Fort Lauderdale** See ITB Specifications See ITB Specifications Fort Lauderdale FL 33301 **Qty** 250

Description
Furnish all materials, labor and equipment for Directional Bore Machine Setup with Pits Complete (includes all pits and site restoration work).

Item	**12453-613-01-15 - BASE BID: Install FPL Directional Boring 1-6-inch Conduit via Directional Bore Complete**
Lot Description	**BASE BID**
Quantity	**450 linear foot**
Unit Price	
Delivery Location	**City of Fort Lauderdale** See ITB Specifications See ITB Specifications Fort Lauderdale FL 33301 **Qty** 450

Description
Furnish all materials, labor and equipment to install FPL 1-6-inch Conduit via Directional Bore Complete (includes all labor and materials, excludes machine setup and conduit).

Item	**12453-613-01-16 - BASE BID: Install FPL Directional Boring 2-6-inch Conduit via Directional Bore Complete**
Lot Description	**BASE BID**
Quantity	**5000 linear foot**
Unit Price	
Delivery Location	**City of Fort Lauderdale**

See ITB Specifications
See ITB Specifications
Fort Lauderdale FL 33301
Qty 5000

Description
Furnish all materials, labor and equipment to install FPL 2-6-inch Conduit via Directional Bore Complete (includes all labor and materials, excludes machine setup and conduit).

Item	**12453-613-01-17 - BASE BID: Install FPL Directional Boring 3-2-inch Conduit via Directional Bore Complete**
Lot Description	**BASE BID**
Quantity	**25500 linear foot**
Unit Price	
Delivery Location	**City of Fort Lauderdale** See ITB Specifications See ITB Specifications Fort Lauderdale FL 33301 **Qty** 25500

Description
Furnish all materials, labor and equipment to install FPL 3-2-inch Conduit via Directional Bore Complete (includes all labor and materials, excludes machine setup and conduit).

Item	**12453-613-01-18 - BASE BID: Install FPL Directional Boring 2-2-inch Conduit via Directional Bore Complete**
Lot Description	**BASE BID**
Quantity	**20500 linear foot**
Unit Price	
Delivery Location	**City of Fort Lauderdale** See ITB Specifications See ITB Specifications Fort Lauderdale FL 33301 **Qty** 20500

Description
Furnish all materials, labor and equipment to install FPL 2-2-inch Conduit via Directional Bore Complete (includes all labor and materials, excludes machine setup and conduit).

Item	**12453-613-01-19 - BASE BID: Install FPL Directional Boring 1-2-inch Conduit via Directional Bore Complete**
Lot Description	**BASE BID**
Quantity	**5500 linear foot**
Unit Price	
Delivery Location	**City of Fort Lauderdale** See ITB Specifications See ITB Specifications Fort Lauderdale FL 33301 **Qty** 5500

Description
Furnish all materials, labor and equipment to install FPL 1-2-inch Conduit via Directional Bore Complete (includes all labor and materials, excludes machine setup and conduit) .

Item	**12453-613-01-20 - BASE BID: Install ATT/COMCAST Directional Boring 1-4-inch Conduit via Directional Bore**
Lot Description	**BASE BID**
Quantity	**26000 linear foot**
Unit Price	
Delivery Location	**City of Fort Lauderdale** See ITB Specifications See ITB Specifications Fort Lauderdale FL 33301 **Qty** 26000

Description
Furnish all materials, labor and equipment to install ATT/COMCAST 1-4-inch Conduit via Directional Bore (includes all labor and materials including conduit, excludes machine setup).

Item	**12453-613-01-21 - BASE BID: Install ATT/COMCAST Directional Boring 1-2-inch Conduit via Directional Bore**
Lot Description	**BASE BID**
Quantity	**26000 linear foot**
Unit Price	
Delivery Location	**City of Fort Lauderdale** See ITB Specifications See ITB Specifications Fort Lauderdale FL 33301 **Qty** 26000

Description
Furnish all materials, labor and equipment to install ATT/COMCAST 1-2-inch Conduit via Directional Bore (includes all labor and materials including conduit, excludes machine setup).

Item	**12453-613-01-22 - BASE BID: Install ATT/COMCAST Directional Boring 2-1-inch Service Conduit via Directional**
Lot Description	**BASE BID**
Quantity	**26000 linear foot**
Unit Price	
Delivery Location	**City of Fort Lauderdale** See ITB Specifications See ITB Specifications Fort Lauderdale FL 33301 **Qty** 26000

Description
Furnish all materials, labor and equipment to install ATT/COMCAST 2-1-inch Service Conduit via Directional Bore (includes all labor and materials including conduit, excludes machine setup).

Item	**12453-613-01-23 - BASE BID: Install Trenching 24-inch Trench (Hand Dig with Backfill)**
Lot Description	**BASE BID**
Quantity	**200 linear foot**
Unit Price	
Delivery Location	**City of Fort Lauderdale** See ITB Specifications See ITB Specifications

Fort Lauderdale FL 33301
Qty 200

Description
Furnish all materials, labor and equipment to install 24-inch Trench (Hand Dig with Backfill).

Item	**12453-613-01-24 - BASE BID: Install Trenching 30-inch Trench (Hand Dig with Backfill)**
Lot Description	**BASE BID**
Quantity	**200 linear foot**
Unit Price	
Delivery Location	**City of Fort Lauderdale** See ITB Specifications See ITB Specifications Fort Lauderdale FL 33301 **Qty** 200

Description
Furnish all materials, labor and equipment to install 30-inch Trench (Hand Dig with Backfill).

Item	**12453-613-01-25 - BASE BID: Install Trenching 36-inch Trench (Hand Dig with Backfill)**
Lot Description	**BASE BID**
Quantity	**200 linear foot**
Unit Price	
Delivery Location	**City of Fort Lauderdale** See ITB Specifications See ITB Specifications Fort Lauderdale FL 33301 **Qty** 200

Description
Furnish all materials, labor and equipment to install 36-inch Trench (Hand Dig with Backfill).

Item	**12453-613-01-26 - BASE BID: Install Trenching 42-inch Trench (Hand Dig with Backfill)**
Lot Description	**BASE BID**
Quantity	**200 linear foot**
Unit Price	
Delivery Location	**City of Fort Lauderdale** See ITB Specifications See ITB Specifications Fort Lauderdale FL 33301 **Qty** 200

Description
Furnish all materials, labor and equipment to install 42-inch Trench (Hand Dig with Backfill).

Item	**12453-613-01-27 - BASE BID: Install Trenching 48-inch Trench (Hand Dig with Backfill)**
Lot Description	**BASE BID**
Quantity	**200 linear foot**
Unit Price	

Delivery Location	**City of Fort Lauderdale** See ITB Specifications See ITB Specifications Fort Lauderdale FL 33301 **Qty** 200

Description
Furnish all materials, labor and equipment to install 48-inch Trench (Hand Dig with Backfill).

Item	**12453-613-01-28 - BASE BID: Install FPL Conduit Only 1-2-inch Conduit Compete**
Lot Description	**BASE BID**
Quantity	**6000 linear foot**
Unit Price	
Delivery Location	**City of Fort Lauderdale** See ITB Specifications See ITB Specifications Fort Lauderdale FL 33301 **Qty** 6000

Description
Furnish all materials, labor and equipment to install FPL 1-2-inch Conduit Compete (Labor for conduit, string, caps as needed; excludes materials and trenching).

Item	**12453-613-01-29 - BASE BID: Install FPL Conduit Only 1-6-inch Conduit Compete**
Lot Description	**BASE BID**
Quantity	**6000 linear foot**
Unit Price	
Delivery Location	**City of Fort Lauderdale** See ITB Specifications See ITB Specifications Fort Lauderdale FL 33301 **Qty** 6000

Description
Furnish all materials, labor and equipment to install FPL 1-6-inch Conduit Compete (Labor for conduit, string, caps as needed; excludes materials and trenching).

Item	**12453-613-01-30 - BASE BID: Install ATT/COMCAST Conduit Only 1-4-inch Conduit Compete**
Lot Description	**BASE BID**
Quantity	**500 linear foot**
Unit Price	
Delivery Location	**City of Fort Lauderdale** See ITB Specifications See ITB Specifications Fort Lauderdale FL 33301 **Qty** 500

Description
Furnish all materials, labor and equipment to install ATT / COMCAST 1-4-inch Conduit Compete (Labor and materials for conduit, string, caps as needed; excludes trenching).

Item	**12453-613-01-31 - BASE BID: Install ATT/COMCAST Conduit Only 1-2-inch Conduit Compete**
Lot Description	**BASE BID**
Quantity	**500 linear foot**
Unit Price	
Delivery Location	**City of Fort Lauderdale** See ITB Specifications See ITB Specifications Fort Lauderdale FL 33301 **Qty** 500

Description
Furnish all materials, labor and equipment to install ATT / COMCAST 1-2-inch Conduit Compete (Labor and materials for conduit, string, caps as needed; excludes trenching).

Item	**12453-613-01-32 - BASE BID: Install ATT/COMCAST Conduit Only 1-1-inch Conduit Compete**
Lot Description	**BASE BID**
Quantity	**500 linear foot**
Unit Price	
Delivery Location	**City of Fort Lauderdale** See ITB Specifications See ITB Specifications Fort Lauderdale FL 33301 **Qty** 500

Description
Furnish all materials, labor and equipment to install ATT / COMCAST 1-1-inch Conduit Compete (Labor and materials for conduit, string, caps as needed; excludes trenching).

Item	**12453-613-01-33 - BASE BID: Install FPL Cable 4/0 HDPE-TPX secondary cable in 2-inch conduit 50 feet or les**
Lot Description	**BASE BID**
Quantity	**41000 linear foot**
Unit Price	
Delivery Location	**City of Fort Lauderdale** See ITB Specifications See ITB Specifications Fort Lauderdale FL 33301 **Qty** 41000

Description
Furnish all materials, labor and equipment to install FPL 4/0 HDPE-TPX secondary cable in 2-inch conduit 50 feet or less.

Item	**12453-613-01-34 - BASE BID: Install FPL Cable 4/0 HDPE HDPE-TPX secondary cable in 2-inch conduit 51 to 200**
Lot Description	**BASE BID**
Quantity	**1000 linear foot**
Unit Price	
Delivery Location	**City of Fort Lauderdale** See ITB Specifications See ITB Specifications

Fort Lauderdale FL 33301
Qty 1000

Description
Furnish all materials, labor and equipment to install FPL 4/0 HDPE-TPX secondary cable in 2-inch conduit 51 to 200 feet.

Item	**12453-613-01-35 - BASE BID: Install FPL Cable 4/0-HDPE-TPX secondary cable in 2-inch conduit over 200 feet**
Lot Description	**BASE BID**
Quantity	**1000 linear foot**
Unit Price	
Delivery Location	**City of Fort Lauderdale** See ITB Specifications See ITB Specifications Fort Lauderdale FL 33301 **Qty** 1000

Description
Furnish all materials, labor and equipment to install FPL 4/0-HDPE-TPX secondary cable in 2-inch conduit over 200 feet.

Item	**12453-613-01-36 - BASE BID: Install FPL Cable 1CC- 1/0 XPE primary cable in 2-inch conduit 100 feet or less**
Lot Description	**BASE BID**
Quantity	**92000 linear foot**
Unit Price	
Delivery Location	**City of Fort Lauderdale** See ITB Specifications See ITB Specifications Fort Lauderdale FL 33301 **Qty** 92000

Description
Furnish all materials, labor and equipment to install FPL 1CC- 1/0 XPE primary cable in 2-inch conduit 100 feet or less.

Item	**12453-613-01-37 - BASE BID: Install FPL Cable 1CC- 1/0 XPE primary cable in 2-inch conduit 101 to 400 feet**
Lot Description	**BASE BID**
Quantity	**1000 linear foot**
Unit Price	
Delivery Location	**City of Fort Lauderdale** See ITB Specifications See ITB Specifications Fort Lauderdale FL 33301 **Qty** 1000

Description
Furnish all materials, labor and equipment to install FPL 1CC- 1/0 XPE primary cable in 2-inch conduit 101 to 400 feet.

Item	**12453-613-01-38 - BASE BID: Install FPL Cable 1CC- 1/0 XPE primary cable in 2-inch conduit over 400 feet**
Lot Description	**BASE BID**
Quantity	**1000 linear foot**
Unit Price	

Delivery Location	**City of Fort Lauderdale** See ITB Specifications See ITB Specifications Fort Lauderdale FL 33301 **Qty** 1000

Description
Furnish all materials, labor and equipment to install FPL 1CC- 1/0 XPE primary cable in 2-inch conduit over 400 feet.

Item	**12453-613-01-39 - BASE BID: Install FPL Cable 3CC-1000KCMIL XPE Feeder cable in 6-inch conduit 50 feet or le**
Lot Description	**BASE BID**
Quantity	**200 linear foot**
Unit Price	
Delivery Location	**City of Fort Lauderdale** See ITB Specifications See ITB Specifications Fort Lauderdale FL 33301 **Qty** 200

Description
Furnish all materials, labor and equipment to install FPL 3CC-1000KCMIL XPE Feeder cable in 6-inch conduit 50 feet or less.

Item	**12453-613-01-40 - BASE BID: Install FPL Cable 3CC-1000KCMIL XPE Feeder cable in 6-inch conduit over 50 feet**
Lot Description	**BASE BID**
Quantity	**2000 linear foot**
Unit Price	
Delivery Location	**City of Fort Lauderdale** See ITB Specifications See ITB Specifications Fort Lauderdale FL 33301 **Qty** 2000

Description
Furnish all materials, labor and equipment to install FPL 3CC-1000KCMIL XPE Feeder cable in 6-inch conduit over 50 feet.

Item	**12453-613-01-41 - BASE BID: Terminate FPL Cable 4/0 HDPE TPX secondary cable complete**
Lot Description	**BASE BID**
Quantity	**1000 each**
Unit Price	
Delivery Location	**City of Fort Lauderdale** See ITB Specifications See ITB Specifications Fort Lauderdale FL 33301 **Qty** 1000

Description
Furnish all materials, labor and equipment to terminate 4/0 HDPE TPX secondary cable complete.

Item	**12453-613-01-42 - BASE BID: Terminate FPL Cable 1/0 XPE primary cable complete**
Lot Description	**BASE BID**
Quantity	**100 each**
Unit Price	
Delivery Location	**City of Fort Lauderdale** See ITB Specifications See ITB Specifications Fort Lauderdale FL 33301 **Qty** 100

Description
Furnish all materials, labor and equipment to terminate 1/0 XPE primary cable complete.

Item	**12453-613-01-43 - BASE BID: Terminate FPL Cable 3CC-1000KCMIL XPE feeder cable complete**
Lot Description	**BASE BID**
Quantity	**100 each**
Unit Price	
Delivery Location	**City of Fort Lauderdale** See ITB Specifications See ITB Specifications Fort Lauderdale FL 33301 **Qty** 100

Description
Furnish all materials, labor and equipment to terminate 3CC-1000KCMIL XPE feeder cable complete.

Item	**12453-613-01-44 - BASE BID: Splice FPL Cable 1/0 XPE primary cable complete**
Lot Description	**BASE BID**
Quantity	**50 each**
Unit Price	
Delivery Location	**City of Fort Lauderdale** See ITB Specifications See ITB Specifications Fort Lauderdale FL 33301 **Qty** 50

Description
Furnish all materials, labor and equipment to splice 1/0 XPE primary cable complete.

Item	**12453-613-01-45 - BASE BID: Splice FPL Cable 3CC-1000KCMIL XPE feeder cable complete**
Lot Description	**BASE BID**
Quantity	**40 each**
Unit Price	
Delivery Location	**City of Fort Lauderdale** See ITB Specifications See ITB Specifications Fort Lauderdale FL 33301 **Qty** 40

Description
Furnish all materials, labor and equipment to splice 3CC-1000KCMIL XPE feeder cable complete.

Item	**12453-613-01-46 - BASE BID: Install FPL Padmounted Transformer single phase Pad-mounted Transformer complete**
Lot Description	**BASE BID**
Quantity	**117 each**
Unit Price	
Delivery Location	**City of Fort Lauderdale** See ITB Specifications See ITB Specifications Fort Lauderdale FL 33301 **Qty** 117

Description
Furnish all materials, labor and equipment to install single phase Pad-mounted Transformer complete with terminations and grounding on existing pad.

Item	**12453-613-01-47 - BASE BID: Install FPL Padmounted Transformer open delta (2 TXs) Pad-mounted Transformers c**
Lot Description	**BASE BID**
Quantity	**1 each**
Unit Price	
Delivery Location	**City of Fort Lauderdale** See ITB Specifications See ITB Specifications Fort Lauderdale FL 33301 **Qty** 1

Description
Furnish all materials, labor and equipment to install open delta (2 TXs) Pad-mounted Transformers complete with terminations and grounding on existing pad.

Item	**12453-613-01-48 - BASE BID: Install FPL Padmounted Transformer three phase Pad-mounted Transformer complete**
Lot Description	**BASE BID**
Quantity	**3 each**
Unit Price	
Delivery Location	**City of Fort Lauderdale** See ITB Specifications See ITB Specifications Fort Lauderdale FL 33301 **Qty** 3

Description
Furnish all materials, labor and equipment to install three phase Pad-mounted Transformer complete with terminations and grounding on existing pad.

Item	**12453-613-01-49 - BASE BID: Install FPL Padmounted Switch Cabinet Vista Switch complete**
Lot Description	**BASE BID**
Quantity	**7 each**

Unit Price	
Delivery Location	**City of Fort Lauderdale** See ITB Specifications See ITB Specifications Fort Lauderdale FL 33301 **Qty** 7

Description
Furnish all materials, labor and equipment to install Vista Switch complete with terminations and grounding on existing pad and chambers.

Item	**12453-613-01-50 - BASE BID: Install FPL Feeder Riser 3CC-1000KCMIL FPL Feeder Riser on existing wood pole co**
Lot Description	**BASE BID**
Quantity	**1 each**
Unit Price	
Delivery Location	**City of Fort Lauderdale** See ITB Specifications See ITB Specifications Fort Lauderdale FL 33301 **Qty** 1

Description
Furnish all materials, labor and equipment to install 3CC-1000KCMIL FPL Feeder Riser on existing wood pole complete excluding switches.

Item	**12453-613-01-51 - BASE BID: Install FPL Feeder Riser 3CC-1000KCMIL FPL Feeder Riser on existing concrete pol**
Lot Description	**BASE BID**
Quantity	**1 each**
Unit Price	
Delivery Location	**City of Fort Lauderdale** See ITB Specifications See ITB Specifications Fort Lauderdale FL 33301 **Qty** 1

Description
Furnish all materials, labor and equipment to install 3CC-1000KCMIL FPL Feeder Riser on existing concrete pole complete excluding switches.

Item	**12453-613-01-52 - BASE BID: Install FPL Service/Meter to access Customer Cable to intercept existing UG cust**
Lot Description	**BASE BID**
Quantity	**1 each**
Unit Price	
Delivery Location	**City of Fort Lauderdale** See ITB Specifications See ITB Specifications Fort Lauderdale FL 33301 **Qty** 1

Description
Furnish all materials, labor and equipment to access Customer Cable to intercept existing UG customer owned electric service. (Locating service, cutting customer metal pipe, and associated excavation and site restoration).

Item	**12453-613-01-53 - BASE BID: Install FPL Service/Meter to convert Existing FPL Service Meter Enclosure Only**
Lot Description	**BASE BID**
Quantity	**1 each**
Unit Price	
Delivery Location	**City of Fort Lauderdale** See ITB Specifications See ITB Specifications Fort Lauderdale FL 33301 **Qty** 1

Description
Furnish all materials, labor and equipment to convert Existing FPL Service Meter Enclosure Only (200AMP 240volt single Phase).

Item	**12453-613-01-54 - BASE BID: Install FPL UG Service 4/0 TPX, including 2-inch conduit, cable, 24-inch trench**
Lot Description	**BASE BID**
Quantity	**500 linear foot**
Unit Price	
Delivery Location	**City of Fort Lauderdale** See ITB Specifications See ITB Specifications Fort Lauderdale FL 33301 **Qty** 500

Description
Furnish all materials, labor and equipment to install FPL UG Service (4/0 TPX, including 2-inch conduit, cable, 24-inch trench hand dig and site restoration).

Item	**12453-613-01-55 - BASE BID: Install FPL UG Service Parallel 4/0 TPX, including 2-inch conduit, cable, 24-inc**
Lot Description	**BASE BID**
Quantity	**500 linear foot**
Unit Price	
Delivery Location	**City of Fort Lauderdale** See ITB Specifications See ITB Specifications Fort Lauderdale FL 33301 **Qty** 500

Description
Furnish all materials, labor and equipment to install FPL UG Service (Parallel 4/0 TPX, including 2-inch conduit, cable, 24-inch trench hand dig and site restoration).

Item	**12453-613-01-56 - BASE BID: Install FPL Bump Out Assembly (Removable Barriers) Padmount Transformer Protecti**
Lot Description	**BASE BID**
Quantity	**125 each**
Unit Price	
Delivery Location	**City of Fort Lauderdale** See ITB Specifications

See ITB Specifications
Fort Lauderdale FL 33301
Qty 125

Description
Furnish all materials, labor and equipment to install FPL Padmount Transformer Protective Barrier and Planting Clearances - UN-21.0.0 for Padmount Transformers and Switches/Bump Out Assembly (including two (2) - Bollards per assembly, Type D Curb and site restoration).

Item	**12453-613-01-57 - BASE BID: Construct Type D Curb**
Lot Description	**BASE BID**
Quantity	**2500 linear foot**
Unit Price	
Delivery Location	**City of Fort Lauderdale** See ITB Specifications See ITB Specifications Fort Lauderdale FL 33301 **Qty** 2500

Description
Furnish all materials, labor and equipment to construct standard Type D curb; reconstruction and addition of limerock base where required. This item also includes clearing and grubbing, removal and proper. See detailed specifications.

Item	**12453-613-01-58 - BASE BID: Paving Florida Department of Transportation Type III asphaltic concrete surface**
Lot Description	**BASE BID**
Quantity	**50000 square yard**
Unit Price	
Delivery Location	**City of Fort Lauderdale** See ITB Specifications See ITB Specifications Fort Lauderdale FL 33301 **Qty** 50000

Description
Furnish all materials and equipment to install Florida Department of Transportation Type III asphaltic concrete surface (at one inch depth) using not more than 25% by weight of total aggregates of reclaimed asphalt on existing paved and newly-constructed streets as specified herein, including cut-backs where necessary. This item also includes maintenance of traffic preparation, routing, and setup for task order asphalt quantity greater than 3000 Square yards

---

Item	**12453-613-01-59 - BASE BID: Paving Florida Department of Transportation Type III asphaltic concrete for leve**
Lot Description	**BASE BID**
Quantity	**435 ton**
Unit Price	
Delivery Location	**City of Fort Lauderdale** See ITB Specifications See ITB Specifications Fort Lauderdale FL 33301 **Qty** 435

Description
Furnish all materials, labor and equipment to install leveling course

Item	**12453-613-01-60 - BASE BID: Milling of existing asphalt pavement to a depth of one inch**
Lot Description	**BASE BID**
Quantity	**50000 square yard**
Unit Price	
Delivery Location	**City of Fort Lauderdale** See ITB Specifications See ITB Specifications Fort Lauderdale FL 33301 **Qty** 50000

Description
Furnish all materials, labor and equipment to mill and dispose of existing asphalt pavement to a depth of one inch

Item	**12453-613-01-61 - BASE BID: Pavement marking and signage new 6 inch double yellow thermoplastic**
Lot Description	**BASE BID**
Quantity	**2000 linear foot**
Unit Price	
Delivery Location	**City of Fort Lauderdale** See ITB Specifications See ITB Specifications Fort Lauderdale FL 33301 **Qty** 2000

Description
Furnish all materials, labor and equipment to install new 6 inch double yellow thermoplastic.

Item	**12453-613-01-62 - BASE BID: Pavement marking and signage new 6 inch single white thermoplastic**
Lot Description	**BASE BID**
Quantity	**5000 linear foot**
Unit Price	
Delivery Location	**City of Fort Lauderdale** See ITB Specifications See ITB Specifications Fort Lauderdale FL 33301 **Qty** 5000

Description
Furnish all materials, labor and equipment to install new 6 inch single white thermoplastic.

Item	**12453-613-01-63 - BASE BID: Pavement marking and signage new 6 inch single yellow skip thermoplastic**
Lot Description	**BASE BID**
Quantity	**2000 linear foot**
Unit Price	
Delivery Location	**City of Fort Lauderdale** See ITB Specifications See ITB Specifications

Fort Lauderdale FL 33301
Qty 2000

Description
Furnish all materials, labor and equipment to install new 6 inch single yellow thermoplastic.

Item	**12453-613-01-64 - BASE BID: Pavement marking and signage new 24 inch stop bar white thermoplastic**
Lot Description	**BASE BID**
Quantity	**500 linear foot**
Unit Price	
Delivery Location	**City of Fort Lauderdale** See ITB Specifications See ITB Specifications Fort Lauderdale FL 33301 **Qty** 500

Description
Furnish all materials, labor and equipment to install new 24 inch stop bar white thermoplastic.

Item	**12453-613-01-65 - BASE BID: Pavement marking and signage various colors and blue R.P.M.s at fire hydrants w**
Lot Description	**BASE BID**
Quantity	**150 each**
Unit Price	
Delivery Location	**City of Fort Lauderdale** See ITB Specifications See ITB Specifications Fort Lauderdale FL 33301 **Qty** 150

Description
Furnish all materials, labor and equipment to install various colors and blue R.P.M.s at fire hydrants where streets are overlaid per FDOT Standard Specification for Road and Bridge Construction 2010, Section 706.

Item	**12453-613-01-66 - BASE BID: Service Connection, Single Phase, to all residences and energize to complete fun**
Lot Description	**BASE BID**
Quantity	**310 each**
Unit Price	
Delivery Location	**City of Fort Lauderdale** See ITB Specifications See ITB Specifications Fort Lauderdale FL 33301 **Qty** 310

Description
Furnish all materials, labor and equipment, including full site property restoration

CITY OF FORT LAUDERDALE
CONTRACT AND SPECIFICATIONS PACKAGE

BID NO. 12453-613

PROJECT NO. 11715

LAS OLAS ISLES UNDERGROUNDING OF OVERHEAD UTILITIES

DON GENTILE
PROJECT MANAGER II

MAUREEN LEWIS, MBA, CPPB
SENIOR PROCUREMENT SPECIALIST
Telephone: (954) 828-5239 E-mail: maureenl@fortlauderdale.gov

TABLE OF CONTENTS

Description **Pages**

I. BID INFORMATION

Invitation to Bid ..... ITB-1 thru ITB-4
Instruction to Bidders ..... IB-1 thru IB-6
General Conditions ..... GC-1 thru GC-11
Special Conditions ..... SC-1 thru SC-9

II. CONSTRUCTION AGREEMENT (SAMPLE) ..... C-1 thru C-42

III. DETAILED SCOPE OF WORK AND SCHEDULE 5

IV. TECHNICAL SPECIFICATIONS

1. FPL Standards and Specification for Applicant Installed Facilities
2. ATT Standards and Specifications
3. Comcast Specifications
4. Florida Department of Transportation, FY 2020-21 Standard Plans for Road Construction https://www.fdot.gov/design/standardplans/current/default.shtm
5. Florida Department of Transportation, Standard Specifications for Road and Bridge Construction, July 2020 Edition https://www.fdot.gov/programmanagement/implemented/specbooks/default.shtm
6. City of Fort Lauderdale City Engineering Standard Details https://www.fortlauderdale.gov/home/showdocument?id=7325 https://www.fortlauderdale.gov/home/showdocument?id=1524

MAPS

Map 1 - Location
Map 2 - FPL Hatch Area A-B-C
Map 3 - TransPad Typical Layout

DRAWINGS BOUND SEPARATELY - File No., 4-136-94

Note: **The following documents are available electronically for completion and must be returned with your bid along with your bid security, proof of insurance, and proof of required licenses/certifications.**

CITB Prime Contractor Identification
CITB Questionnaire Sheet
CITB Trench Safety
Non-Collusion Statement
Non-Discrimination Certification Form
Contract Payment Method
Construction Bid Certification Page

INVITATION TO BID

Sealed bids will be received electronically until **2:00 p.m.**, local time, on **TUESDAY, NOVEMBER 3, 2020**, and opened online immediately thereafter for **BID NO., 12453-613, PROJECT NO.,11715, LAS OLAS ISLES UNDERGROUNDING OF OVERHEAD UTILITIES.**

All openings will be held on the BIDSYNC.COM platform. Once the Procurement Specialist opens the solicitation, the bid tabulations may be viewed immediately on a computer, laptop, cell phone, or any other device with WiFi access. The opening may also be viewed in real time through a "Zoom meeting" or similar type platform by using the following information:

Join Zoom Meeting

Phone one-tap: US: +16692545252,,1607737432#,,1#,346922# or
+16468287666,,1607737432#,,1#,346922#
Meeting URL:
https://fortlauderdale.zoomgov.com/j/1607737432?pwd=ZDltbE03NUluWkdsNkpBNDJtTytYQT09

Meeting ID:: 160 773 7432
Password: 346922

Join by Telephone
For higher quality, dial a number based on your current location.
Dial: US: +1 669 254 5252 or +1 646 828 7666
Meeting ID: 160 773 7432
Password: 346922

Anyone requesting assistance or having further inquiry in this matter must contact the Procurement Specialist indicated on the solicitation, via the question and Answer forum on Bidsync.com before the Last Day for Questions indicated in the Solicitation.

Bidders are strongly encouraged to study the entire Bid Package in detail before submitting their bids.

This Project consists of Drawing File No., **4-136-94**, fifty **(50)** sheets.

The Project is located in an area known as "Las Olas Isles." It is bounded by Las Olas Boulevard on the North, New River on the South, Isles of Palm Drive on the East and Mola Avenue to the West.

Intent of Bid:
The intent of this Bid is to award a one-time contract for the conversion of existing overhead electric and communication utilities from overhead to underground in the area known as Las Olas Isles (also known as Area B) to the lowest responsive and responsible bidder.

Scope of Work - Individual Entity
Generally, all work related to various entities shall conform to their specified standards. Where no standards are specified, they shall meet the latest Florida Building Code (FBC) or as directed by the City's Public Works Director or his designee.

FPL: All work related to FPL shall conform to their construction plans and standards. Their "Standards and Specification" are attached under Technical Specifications. FPL will supply all material, equipment, accessories, etc. and the Contractor shall be responsible for their proper installation, acceptable to FPL. Specifically, the Contractor shall, to FPL's satisfaction:

1) Install conduits and concrete products based on the FPL Specifications and in the locations as indicated on the attached plans/drawings;

2) Install cable, transformers, switch pads including, the primary and secondary terminations and connections. FPL will be responsible for coordinating the energization and connection of the new underground circuit(s) to the existing FPL electrical system;
3) FPL will be responsible for removing their facilities after the undergrounded utility is energized and all attachments are removed from the poles.

Comcast: All work related to Comcast shall conform to their construction plans and standards. Unlike FPL, Comcast will provide and install their own material, equipment, accessories, etc. Contractor is responsible for installing conduits and related facilities.

ATT: All work related to ATT shall conform to their construction plans and standards. Unlike FPL, ATT will provide and install their own material, equipment, accessories, etc. Contractor is responsible for installing conduits and related facilities

Additional Work - Overhead to Underground Service Conversions for Individual Properties: The Bidder shall include in the bid price all costs associated with the modifications of services to customers affected by this Project. That includes arranging the conversion of overhead customer service (meter can) to an underground lateral (installation of the trench and conduit) that is to be tied into the new underground system. These modifications must be completed by a licensed electrical contractor in accordance with all codes and FPL specs. The Contractor shall be responsible to trench and install FPL provided conduit including backfilling and landscape/pavement repairs along with the conversion of the meter can. FPL is responsible to install the cable and connect it to the new underground system. This service work is also to be coordinated with the local service planning office or by your qualified contractor using the appropriate notification/coordination.

Costs associated with 3-phase are not a part of this Project scope. However, installation of 3-phase may be negotiated with the individual property owner separately, provided there is no conflict of interest with the City's Project. Refer to Detailed Scope of Work for more details.

Construction Plans
The City intends to award one single contract as described under the headings of Scope of Work – General and Scope of Work – Individual Entity. Although every effort has been made to provide workable construction plans as received from FPL, Comcast and ATT, the bidders shall account for in their pricing, minor adjustment of work or minor adjustments in placement of mounting pads and equipment, for no additional cost to the City. The plans have been prepared based on the best information available to the City and shall serve as a guide only. The Contractor shall be responsible for verifying all information, conflicts and layout prior to starting the work. A close coordination with the City's Project Manager is required.

NOTE: Payment on this contract will be made by Visa or MasterCard.

Licensing Requirements: All undergrounding work shall be performed by contractors who are pre-qualified by FPL and who have successfully completed similar type of undergrounding projects preferably in the local Tri-County area comprising of Palm Beach, Broward and Miami-Dade counties. Any non-undergrounding work shall be performed by a licensed General Contractor in the State of Florida. The City may, at its discretion, allow a Registered Contractor in Broward County, to perform non-undergrounding work, and who can demonstrate successful completion of similar type of work.

Pre-Bid Meeting/Site visit: There will not be a pre-bid meeting or site visit for this Invitation to Bid.

However, it will be the sole responsibility of the bidder to inspect the City's location(s) and become familiar with the scope of the City's requirements and systems prior to submitting a proposal. No variation in price or conditions shall be permitted based upon a claim of ignorance. Submission of a proposal will be considered evidence that the proposer has familiarized himself with the nature and extent of the work, equipment, materials, and labor required.

Drawing Plans: Drawing plans may be obtained **free of charge** at BIDSYNC.COM.

Bid Security: A bid bond for **FIVE percent (5%)** of the bid amount shall accompany each proposal.

Bid Bonds:

Bidders can submit bid bonds for projects **two** different ways.

1) BidSync allows bidders to submit bid bonds electronically directly through their system using **Surety 2000**. For more information on this feature and to access it, contact BIDSYNC customer care department.

2) If bid bonds are not submitted via Surety 2000, Bidders may upload their original executed bid bond on Bidsync to accompany their bids with the electronic proposal. Bid bond shall be written by a surety insurer authorized to do business in the State of Florida as surety, in accordance with Section 255.05, Florida Statutes. Insufficient bid bond surety shall automatically constitute a failure on the part of the Contractor and shall be grounds for rejection of your bid.

It will be the sole responsibility of the bidder to ensure that his bid is submitted prior to the bid opening date and time listed. **PAPER BID SUBMITTALS WILL NOT BE ACCEPTED. BIDS MUST BE SUBMITTED ELECTRONICALLY VIA BIDSYNC.COM**

The City of Fort Lauderdale reserves the right to waive any informality in any or all bids and to reject any or all bids.

For information concerning technical specifications, please utilize the Question/Answer platform provided by BIDSYNC at www.bidsync.com. Questions of a material nature must be received prior to the cut-off date specified in the solicitation. Material changes, if any, to the scope of services or bidding procedures, will only be transmitted by written addendum. (See addendum

section of BIDSYNC Site). **Bidders please note:** No part of your bid can be submitted via FAX. No variation in price or conditions shall be permitted based upon a claim of ignorance. Submission of a bid will be considered evidence that the bidder has familiarized himself with the nature and extent of the work, equipment, materials, and labor required. The entire bid response must be submitted in accordance with all specifications contained in this solicitation.

Information on bid results and projects currently out to bid can be obtained on the City's website – http://www.fortlauderdale.gov/departments/finance/procurement-services. For general inquiries, please call (954) 828-5933.

INSTRUCTIONS TO BIDDERS

The following instructions are given for the purpose of guiding bidders in properly preparing their bids or proposals. These directions have equal force and weight with the specifications, and strict compliance is required with all of these provisions.

QUALIFICATIONS OF BIDDERS – No proposal will be accepted from, nor will any contract be awarded to, any person who is in arrears to the City of Fort Lauderdale, upon any debt or contract, or who has defaulted, as surety or otherwise, upon any obligation to the City, or who is deemed irresponsible or unreliable by the City Commission of Fort Lauderdale.

CONCERNING SUB-CONTRACTORS, SUPPLIERS, AND OTHERS - The amount of work that is sublet by the Bidder shall be limited by the condition that the Bidder shall, with his own organization, perform at least forty percent (40%) of the total dollar amount of the Work to be performed under the Agreement.

PERSONAL INVESTIGATION - Bidders shall satisfy themselves by personal investigation, and by such other means as they may think necessary or desirable, as to the conditions affecting the proposed work and the cost. No information derived from maps, plans, specifications, or from the Engineer, City Manager, or their assistants shall relieve the Contractor from any risk or from fulfilling all terms of the contract.

INCONSISTENCIES – Any seeming inconsistency between different provisions of the plans, specifications, proposal or contract, or any point requiring explanation must be inquired by the bidder, in writing, at least ten (10) days prior to the time set for opening proposals. After proposals are opened, the bidders shall abide by the decision of the Engineer as to such interpretation.

ADDENDA AND INTERPRETATIONS - No interpretations of the meaning of the plans, specifications or other contract documents will be made orally to any bidder. Prospective bidders must request such interpretation in writing as instructed in the bid package. To be considered, such request must be received by the Questions and Answers deadline as indicated in BIDSYNC.COM. Material changes, if any, to the scope of services or bidding procedures will only be transmitted by written addendum. **It is the bidder's responsibility to verify if addendums have been issued in BIDSYNC.COM.** Failure of any bidder to receive any such addenda or interpretation shall not relieve any bidder from any obligation under his bid as submitted. All addenda so issued shall become a part of the contract document. **Bidder** shall verify **in BIDSYNC.COM** that he has all addenda before submitting a bid.

LEGAL CONDITIONS - Bidders are notified to familiarize themselves with the provisions of the laws of the State of Florida relating to hours of labor on municipal work, and with the provisions of the laws of the State of Florida and the Charter and the ordinances of the City of Fort Lauderdale.

PUBLIC ENTITY CRIMES - A person or affiliate who has been placed on the convicted vendor list following a conviction for a public entity crime may not submit a bid on a contract to provide any goods or services to a public entity, may not submit a bid on a contract with a public entity for the construction or repair of a public building or public work, may not submit bids on leases of real property to a public entity, may not be awarded or perform work as a contractor, supplier, subcontractor, or consultant under a contract with any public entity, and may not transact business with any public entity in excess of the threshold amount provided in Section 287.017, Florida Statutes, for Category Two for a period of thirty-six (36) months from the date of being placed on the convicted vendor list.

FORMS OF PROPOSALS - Each proposal and its accompanying statements must be made on the blanks provided. THE FORMS MUST BE SUBMITTED ELECTRONICALLY, IN GOOD ORDER WITH ALL BLANKS COMPLETED, and must show the name of the bidder and a statement as to its contents.

FORMS OF PROPOSALS (continued) - The bid proposal must be signed by one duly authorized officer who can legally bind the firm contractually with the City. In case the bid proposal is signed by a deputy or subordinate, the principal's properly written authority to such deputy or subordinate must accompany the proposal. No proposal will be accepted, for any reason whatsoever, which is not submitted to the City as stated above, within the specified time.

INSURANCE - Contractor shall provide and shall require all of its sub-contractors to provide, pay for, and maintain in force at all times during the term of the Agreement, such insurance, including Property Insurance (Builder's Risk), Commercial General Liability Insurance, Business Automobile Liability Insurance, Workers' Compensation Insurance, Employer's Liability Insurance, and Umbrella/Excess Liability, as stated below. Such policy or policies shall be issued by companies authorized to do business in the State of Florida and having agents upon whom service of process may be made in the State of Florida.

BID BOND - A bid bond shall accompany each proposal as evidence of the good faith and responsibility of the bidder. The bond shall be retained by the City as liquidated damages should the bidder refuse to or fail to enter into a contract for the execution of the work embraced in this proposal, in the event the proposal of the bidder is accepted. Retention of such amount shall not be construed as a penalty or forfeiture.

The above bond shall be a guarantee that the bidder will, if necessary, promptly execute a satisfactory contract and furnish good and sufficient bonds. As soon as a satisfactory contract has been executed and the bonds furnished and accepted, the bond accompanying the proposal of the successful bidder will be returned to him. If the successful bidder shall not enter into, execute, and deliver such a contract and furnish the required bonds within ten (10) days after receiving notice to do so, the bid bond shall immediately become the property of the City of Fort Lauderdale as liquidated damages. Retention of such amount shall not be construed as a penalty or forfeiture.

FILLING IN BIDS - All prices must be electronically submitted in the proposal pages, and all proposals must fully cover all items for which proposals are asked and no other. Bidders are required to state the names and places of residence of all persons interested, and if no other person is interested, the bidder shall distinctly state such fact and shall state that the proposal is, in all respects, fair and without collusion or fraud. Where more than one person is interested, it is required that all persons interested or their legal representative make all verification and subscribe to the proposal.

PRICES QUOTED: Deduct any discount offered and quote firm net unit prices. In the case of a discrepancy in computing the amount of the bid, the unit price quoted will govern. All prices quoted shall be F.O.B. destination, freight prepaid (Bidder pays and bears freight charges, Bidder owns goods in transit and files any claims), unless otherwise stated in Special Conditions. Each item must be bid separately. No attempt shall be made to tie any item or items contained in the ITB with any other business with the City.

BIDS FIRM FOR ACCEPTANCE: Bidder warrants, by virtue of bidding, that his bid and the prices quoted in his bid will be firm for acceptance by the City for a period of one hundred and twenty (120) days from the date of bid opening unless otherwise stated in the ITB. The City shall award contract within this time period or shall request to the recommended awarded vendor an extension to hold pricing, until products/services have been awarded.

ADDITIONAL ITEMS OR SERVICES: The City may require additional items or services of a similar nature, but not specifically listed in the contract. The Contractor agrees to provide such items or services, and shall provide the City prices on such additional items or services. If the price(s) offered are not acceptable to the City, and the situation cannot be resolved to the satisfaction of the City, the City reserves the right to procure those items or services from other vendors, or to cancel the contract upon giving the Contractor thirty (30) days written notice.

DELETION OR MODIFICATION OF SERVICES: The City reserves the right to delete any portion of the Contract at any time without cause, and if such right is exercised by the City, the total fee shall be reduced in the same ratio as the estimated cost of the work deleted bears to the estimated cost of the work originally planned. If work has already been accomplished on the portion of the Contract to be deleted, the Contractor shall be paid for the deleted portion on the basis of the estimated percentage of completion of such portion.

If the Contractor and the City agree on modifications or revisions to the task elements, after the City has approved work to begin on a particular task or project, and a budget has been established for that task or project, the Contractor will submit a revised budget to the City for approval prior to proceeding with the work.

CANCELLATION FOR UNAPPROPRIATED FUNDS: The obligation of the City for payment to a Contractor is limited to the availability of funds appropriated in a current fiscal period, and continuation of the contract into a subsequent fiscal period is subject to appropriation of funds, unless otherwise authorized by law.

CAUSES FOR REJECTION - No proposal will be canvassed, considered or accepted which, in the opinion of the City Commission, is informal or unbalanced, or contains inadequate or unreasonable prices for any items; each item must carry its own proportion of the cost as nearly as is practicable. Any alteration, erasure, interlineation, or failure to specify bids for all items called for in the schedule shall render the proposal informal.

REJECTION OF BIDS - The City reserves the right to reject any bid if the evidence submitted by the bidder, or if the investigation of such bidder, fails to satisfy the City that such bidder is properly qualified to carry out the obligations and to complete the work contemplated. Any or all proposals will be rejected, if there is reason to believe that collusion exists among bidders. A proposal will be considered irregular and may be rejected, if it shows serious omissions, alterations in form, additions not called for, conditions or unauthorized alternates, or irregularities of any kind. The City reserves the right to reject any or all proposals and to waive such technical errors as may be deemed best for the interests of the City.

BID PROTEST PROCEDURE: Any proposer or bidder who is not recommended for award of a contract and who alleges a failure by the City to follow the City's Procurement Ordinance or any applicable law may protest to the Procurement Division – Deputy Director of Finance, by delivering a letter of protest within five (5) days after a Notice of Intent to award is posted on the City's website at the following link: http://www.fortlauderdale.gov/departments/finance/procurement-services/notices-of-intent-to-award.

The complete Protest Ordinance may be found on the City's website at the following link: https://library.municode.com/fl/fort_lauderdale/codes/code_of_ordinances?nodeId=COOR_CH2AD_ARTVFI_DIV2PR_S2-182DIREPR

WITHDRAWALS - Any bidder may, without prejudice to himself, withdraw his proposal at any time prior to the expiration of the time during which proposals may be submitted. Such request for withdrawal must be in writing and signed in the same manner and by the same person who signed the

proposal. After expiration of the period for receiving proposals, no proposal can be withdrawn, modified, or explained.

CONTRACT - The bidder to whom award is made shall execute a written contract to do the work and maintain the same in good repair until final acceptance by the proper authorities, and shall furnish good and sufficient bonds as specified within ten (10) days after receiving such contract for execution. If the bidder to whom the first award is made fails to enter into a contract as provided, the award may be annulled and the contract let to the next lowest bidder who is reliable, responsible, and responsive in the opinion of the City Commission, and that bidder shall fulfill every stipulation and obligation as if such bidder were the original party to whom award was made.

The contract shall provide that the Contractor agrees to correct any defective or faulty work or material, which may appear within one (1) year after completion of the work and receipt of final payment.

ENFORCEMENT OF SPECIFICATIONS – It shall be the responsibility of the Project Manager to ensure that all specifications for the Project are fully complied with.

COPIES OF DRAWING PLANS – Drawing plans may be obtained **free of charge** at BIDSYNC.COM.

SURETY BOND – The Contractor shall execute and record in the public records of Broward County, Florida, a payment and performance bond in an amount at least equal to the Contract Price with a surety insurer authorized to do business in the State of Florida as surety, ("Bond"), in accordance with Section 255.05, Florida Statutes (2019), as may be amended or revised, as security for the faithful performance and payment of all of the Contractor's obligations under the Contract Documents.

The successful bidder shall furnish a performance and payment bond in compliance with Section 255.05, Florida Statutes (2019), written by a Corporate Surety company, holding a Certificate of Authority from the Secretary of the Treasury of the United States as acceptable sureties on federal bonds, in an amount equal to the total amount payable by the terms of the contract, executed and issued by a Resident Agent licensed by and having an office in the State of Florida, representing such Corporate Surety, conditioned for the due and faithful performance of the work, and providing in addition to all other conditions, that if the Contractor, or his or its subcontractors, fail to duly pay for any labor, materials, or other supplies used or consumed by such Contractor, or his or its subcontractor or subcontractors, in performance of the work contracted to be done, the Surety will pay the same in the amount not exceeding the sum provided in such bonds, together with interest at the rate of fifteen percent (15%) per annum, and that they shall indemnify and hold harmless the City of Fort Lauderdale to the extent of any and all payments in connection with carrying out of the contract, which the City may be required to make under the law.

The Contractor is required at all times to have a valid surety bond in force covering the work being performed. A failure to have such bond in force at any time shall constitute a default on the part of the Contractor. A bond written by a surety, which becomes disqualified to do business in the State of Florida, shall automatically constitute a failure on the part of the Contractor to meet the above requirements.

Such bond shall continue in effect for one (1) year after completion and acceptance of the work with liability equal to at least twenty-five percent (25%) of contract price, or an additional bond shall be conditioned that the Contractor will correct any defective or faulty work or material which appear within one (1) year after completion of the contract, upon notification by the City, except in contracts which are concerned solely with demolition work, in which cases twenty-five percent (25%) liability will not be applicable.

AUDIT OF CONTRACTOR'S RECORDS - Upon execution of the Contract, the City reserves the right to conduct any necessary audit of the Contractor's records. Such an audit, or audits, may be conducted by the City or its representatives at any time prior to final payment, or thereafter, for a period up to three (3) years. The City may also require submittal of the records from either the Contractor, the Subcontractor, or both. For the purpose of this Section, records shall include all books of account, supporting documents and papers deemed necessary by the City to assure compliance with the contract provisions.

Failure of the Contractor or Subcontractor to comply with these requirements may result in disqualification or suspension from bidding for future contracts or disapproval as a Subcontractor at the option of the City.

The Contractor shall assure that each of its Subcontractors will provide access to its records pertaining to the project upon request by the City.

PERIODIC ESTIMATE FOR PARTIAL PAYMENT - After the Contractor has submitted a periodic estimate for partial payment, approved and certified by the Project Manager for approval, the City shall make payment in the manner provided in the Contract Documents and in accordance with Florida's Prompt Payment Act, Section 218, Florida Statutes provided the pay application is complete and error free.

RESERVATION FOR AWARD AND REJECTION OF BIDS - The City reserves the right to accept or reject any or all bids, part of bids, and to waive minor irregularities or variations to specifications contained in bids, and minor irregularities in the bidding process. The City also reserves the right to award the contract on a split order basis, lump sum basis, individual item basis, or such combination as shall best serve the interest of the City. The City reserves the right to make an award to the responsive and responsible bidder whose product or service meets the terms, conditions, and specifications of the ITB and whose bid is considered to best serve the City's interest: In determining the responsiveness of the offer and the responsibility of the Bidder, the following shall be considered when applicable: the ability, capacity and skill of the Bidder to perform as required; whether the Bidder can perform promptly, or within the time specified, without delay or interference; the character, integrity, reputation, judgment, experience and efficiency of the Bidder; the quality of past performance by the Bidder; the previous and existing compliance by the Bidder with related laws and ordinances; the sufficiency of the Bidder's financial resources; the availability, quality and adaptability of the Bidder's supplies or services to the required use; the ability of the Bidder to provide future maintenance, service or parts; the number and scope of conditions attached to the bid.

MINORITY AND WOMEN-OWNED BUSINESS ENTERPRISE PARTICIPATION AND SMALL BUSINESS - It is the desire of the City of Fort Lauderdale to increase the participation of minority (MBE) and women-owned (WBE) businesses in its contracting and procurement programs. While the City does not have any preference or set aside programs in place, it is committed **to a policy of equitable participation for these firms.** The City of Fort Lauderdale wants to increase the participation of Minority Business Enterprises (MBE), Women Business Enterprises (WBE), and Small Business Enterprises (SBE) in its procurement activities. If your firm qualifies in accordance with the below definitions, please indicate in the space provided in this ITB.

Minority Business Enterprise (MBE) "A Minority Business" is a business enterprise that is owned or controlled by one or more socially or economically disadvantaged persons. Such disadvantage may arise from cultural, racial, chronic economic circumstances or background or other similar cause. Such persons include, but are not limited to: Blacks, Hispanics, Asian Americans, and Native Americans.

The term "Minority Business Enterprise" means a business at least fifty-one percent (51%) of which is owned by minority group members or, in the case of a publicly owned business, at least fifty-one percent (51%) of the stock of which is owned by minority group members. For the purpose of the preceding sentence, minority group members are citizens of the United States who include, but are not limited to: Blacks, Hispanics, Asian Americans, and Native Americans.

Women Business Enterprise (WBE) a "Women Owned or Controlled Business" is a business enterprise at least fifty-one percent (51%) of which is owned by females or, in the case of a publicly owned business, at least fifty-one percent (51%) of the stock of which is owned by females.

Small Business Enterprise (SBE) "Small Business" means a corporation, partnership, sole proprietorship, or other legal entity formed for the purpose of making a profit, which is independently owned and operated, has either fewer than 100 employees or less than $1,000,000 in annual gross receipts.

BLACK includes persons having origins in any of the Black racial groups of Africa.

WHITE includes persons whose origins are Anglo-Saxon and Europeans and persons of Indo-European decent including Pakistani and East Indian.

HISPANIC includes persons of Mexican, Puerto Rican, Cuban, Central and South American, or other Spanish culture or origin, regardless of race.

NATIVE AMERICAN includes persons whose origins are American Indians, Eskimos, Aleuts, or Native Hawaiians.

ASIAN AMERICAN includes persons having origin in any of the original peoples of the Far East, Southeast Asia, the Indian subcontinent, or the Pacific Islands.

DEBARRED OR SUSPENDED BIDDERS OR PROPOSERS - The bidder or proposer certifies, by submission of a response to this solicitation, that neither it nor its principals and subcontractors are presently debarred or suspended by any Federal department or agency.

LOBBYING ACTIVITIES - **ALL CONTRACTORS PLEASE NOTE**: Any contractor submitting a response to this solicitation must comply, if applicable, with City of Fort Lauderdale Ordinance No. C-11-42 & Resolution No. 07-101, Lobbying Activities. Copies of Ordinance No., C-11-42, and Resolution No. 07-101, may be obtained from the City Clerk's Office on the 7th Floor of City Hall, 100 N. Andrews Avenue, Fort Lauderdale, Florida 33301. The Ordinance may also be viewed on the City's website at https://www.fortlauderdale.gov/home/showdocument?id=6036.

GENERAL CONDITIONS

Unless otherwise modified in the Project's Special Conditions, the following General Conditions shall be part of the Contract:

GC - 01 - DEFINITIONS - The following words and expressions, or pronouns used in their stead, shall wherever they appear in the Contract and the Contract Documents, be construed as follows:

"Addendum" or "Addenda" - shall mean the additional Contract provisions issued in writing, by the Engineer, prior to the receipt of bids.

"Bid" – shall mean the offer or proposal of the Bidder submitted on the prescribed form setting forth the prices for the Work to be performed.

"Bidder" – shall mean any person, firm, company, corporation or entity submitting a bid for the Work.

"Bonds" –shall mean bid, performance and payment bonds and other instruments of security, furnished by Contractor and his surety in accordance with the Contract Documents.

"City" – shall mean the City of Fort Lauderdale, Florida, a Florida municipal corporation. In the event the City exercises its regulatory authority as a government body, the exercise of such regulatory authority and the enforcement of any rules, regulations, codes, laws and ordinances shall be deemed to have occurred pursuant to City's authority as a governmental body and shall not be attributable in any manner to the City as a party to this Contract.

"Consultant" – shall mean a person, firm, company, corporation or other entity employed by the City to perform the professional services for the Project.

"Contractor" – shall mean the successful Bidder who has been employed by the City to perform the construction and related services for the project.

"Contract Work" - shall mean everything expressed or implied to be required to be furnished and furnished by the Contractor by any one or more of the parts of the Contract Documents referred to in the Contract hereof. In case of any inconsistency in or between any part or parts of this Contract, the Project Manager shall determine which shall prevail.

"Design Documents" – shall mean the construction plans and specifications included as part of a Bid/Proposal Solicitation prepared either by the City or by the Consultant under a separate Agreement with the City.

"Engineer" - shall include the terms "professional engineer" and "licensed engineer" and means a person who is licensed to engage in the practice of engineering under Florida Statute, Chapter 471. An Engineer may be a City employee or a consultant hired by the City.

"Extra Work" - shall mean work other than that required by the Contract.

"Inspector" – shall mean an authorized representative of the City assigned to make necessary inspections of materials furnished by Contractor and of the Work performed by Contractor.

"Notice" - shall mean written notice sent by certified United States mail, return receipt requested, or sent by commercial express carrier with acknowledgement of delivery, or via fax or email, or by

hand delivery with a request for a written receipt of acknowledgment of delivery and shall be served upon the Contractor either personally or to its place of business listed in the Bid.

"Owner" - shall mean the City of Fort Lauderdale.

"Project Manager" - shall mean a professional designated by the City to manage the Project under the supervision and direction of the Public Works Director or designee.

"Public Works Director" – shall mean the Public Works Director of the City of Fort Lauderdale.

"Site" - shall mean the area upon or in which the Contractor's operations are carried out and such other areas adjacent thereto as may be designated as such by the Project Manager.

"Sub-contractor" - shall mean any person, firm, company, corporation or other entity, other than employees of the Contractor, who or which contracts with the contractor, to furnish, or actually furnishes labor and materials, or labor and equipment, or labor, materials and equipment at the site.

"Surety" - shall mean any corporation or entity that executes, as Surety, the Contractor's performance and payment bond securing the performance of this Contract.

GC - 02 - SITE INVESTIGATION AND REPRESENTATION - The Contractor acknowledges that it has satisfied itself as to the nature and location of the Work under the Contract Documents, the general and local conditions of the Site, particularly those bearing upon availability of transportation, disposal, handling and storage of materials, availability of labor, water, electric power, and roads; field conditions, the type of equipment and facilities needed preliminary to and during the prosecution of the Work and all other matters which can in any way affect the Work or the cost thereof under the Contract Documents.

The Contractor acknowledges that it has conducted extensive tests, examinations and investigations and represents and warrants a thorough familiarization with the nature and extent of the Contract Documents, the Work, locality, soil conditions, moisture conditions and all year-round local weather and climate conditions (past and present), and, in reliance on such tests, examination and investigations conducted by Contractor and the Contractor's experts, has determined that no conditions exist that would in any manner affect the Bid Price and that the project can be completed for the Bid Price submitted.

Any failure by the Contractor to acquaint itself with all the Site conditions shall not relieve Contractor from responsibility for properly estimating the difficulty or cost thereof under the Contract Documents.

GC - 03 - SUBSTITUTIONS - If the Contractor desires to use materials and/or products of manufacturer's names different from those specified in the Contract Documents, the Bidder requesting the substitution shall make written application as described herein. The burden of proving the equality of the proposed substitution rests on the Contractor making the request. To be acceptable, the proposed substitution shall meet or exceed all expressed requirements of the Contract Documents and shall be submitted upon the Contractor's letterhead. The following requirements shall be met in order for the substitution to be considered:

1. Requests for substitution shall be accompanied by such technical data, as the party making the request desires to submit. The Project Manager may consider reports from reputable independent testing laboratories, verified experience records from previous users and other written information valid in the circumstances; and

2. Requests for substitution shall completely and clearly indicate in what respects the materials and/or products differ from those indicated in the Contract Documents; and

3. Requests for substitution shall be accompanied by the manufacturer's printed recommendations clearly describing the installation, use and care, as applicable, of the proposed substitutions; and

4. Requests for substitution shall be accompanied by a complete schedule of changes in the Contract Documents, if any, which must be made to permit the use of the proposed substitution.

If a proposed substitution is approved by the Project Manager, an addendum will be issued to prospective bidders not less than three (3) working days prior to the date set for opening of bids. Unless substitutions are received and approved as described above, the successful Bidder shall be responsible for furnishing materials and products in strict accordance with the Contract Documents.

GC- 04 – CONSTRUCTION RESOURCES – Contractor shall provide all labor and equipment necessary to complete the installation within a timely manner. Contractor shall provide details as to manpower and equipment to be dedicated to the project in its Work Plan. Contractor is responsible for making arrangements, obtaining and purchasing construction water services if required to complete the work.

GC – 05 - CONTROL OF THE WORK - The Project Manager shall have full control and direction of the Work in all respects. The Project Manager and/or his authorized designee(s) shall, at all times, have the right to inspect the Work and materials. The Contractor shall furnish all reasonable facilities for obtaining such information, as the Project Manager may desire respecting the quality of the Work and materials and the manner of conducting the Work. Should the Contractor be permitted to perform night Work, or to vary the period which work is ordinarily carried on in the daytime, he shall give ample notice to the Project Manager so that proper and adequate inspection may be provided. If providing advanced notice, it can be "at least three (3) calendar days in advance. Such Work shall be done only under such regulations as are furnished in writing by the Project Manager, and no extra compensation shall be allowed to the Contractor therefore. In the event of night work, the Contractor shall furnish such light, satisfactory to the Project Manager, as will ensure proper inspection. Nothing herein contained shall relieve the Contractor from compliance with any and all City ordinances relating to noise or Work during prohibited hours.

GC – 06 - SUB-CONTRACTOR - The Contractor shall not sublet, in whole or any part of the Work without the written consent and approval of the Project Manager. Within ten (10) days after official notification of starting date, the Contractor must submit in writing, to the Project Manager, a list of all Sub-contractors. No Work shall be done by any sub-contractor until such Sub-contractor has been officially approved by the Project Manager. A sub-contractor not appearing on the original list will not be approved without written request submitted to the Project Manager and approved by the Public Works Director. In all cases, the Contractor shall give his personal attention to the Work of the Sub-contractors and the Sub-contractor is liable to be discharged by the Contractor, at the direction of the Project Manager, for neglect of duty, incompetence or misconduct.

Acceptance of any sub-contractor, other person, or organization by the Project Manager shall not constitute a waiver of any right of the Project Manager to reject defective Work or Work not in conformance with the Contract Documents.

Contractor shall be fully responsible for all acts and omissions of its Sub-contractors and of persons and organizations directly or indirectly employed by them and of persons and organizations for whose acts any of them may be liable to the same extent that he is responsible for the acts and omissions of persons directly employed by him. Nothing in the Contract Documents shall create any contractual relationship between City and any sub-contractor or other person or organization having a direct contract with Contractor, nor shall it create any obligation on the part of City to pay or to see to the payment of any moneys due to any sub-contractor or other person, or organization, except as may otherwise be required by law.

GC - 07 - QUANTITIES - Contractor recognizes and agrees that the quantities shown on plans and Bid/Price Schedule are estimates only and may vary during actual construction. No change shall be made involving any departure from the general scheme of the Work and that no such change involving a material change in cost, either to the City or Contractor, shall be made, except upon written permission of the City. However, the Project Manager shall have the right to make minor alternations in the line, grade, plan, form or materials of the Work herein contemplated any time before the completion of the same. That if such alterations shall diminish the quantity of the Work to be done, such alterations shall not constitute a claim for damages or anticipated profits. That if such alterations increase the amount of the Work to be done, such increase shall be paid for according to the quantity actually performed and at the unit price or prices stipulated therefore in the Contract. The City shall, in all cases of dispute, determine the amount or quantity of the several kinds of Work which are to be paid for under this Contract, and shall decide all questions relative to the execution of the same, and such estimates and decisions shall be final and binding.

Any Work not herein specified, which might be fairly implied as included in the Contract, of which the City shall judge, shall be done by the Contractor without extra charge. However, such cost increases shall be authorized either by the Public Works Director or designee, or the City Commission based upon the purchasing threshold amounts provided for in Chapter 2 of the City of Fort Lauderdale's Code of Ordinances.

GC - 08 - NO ORAL CHANGES - Except to the extent expressly set forth in the Contract, no change in, or modification, termination or discharge of the Contract in any form whatsoever, shall be valid or enforceable unless it is in writing and signed by the parties charged, therewith or their duly authorized representative.

GC – 09 - PERMITS AND PROTECTION OF PUBLIC – Permits on file with the City and/or those permits to be obtained by the Contractor, shall be considered directive in nature, and will be considered a part of this Contract. A copy of all permits shall be given to the City and become part of the Contract Documents. Terms of permits shall be met prior to acceptance of the Work and release of the final payment.

Contractor shall secure all permits and licenses required for completing the Project. Contractor will obtain the necessary State, County, and City construction/work permits if required.

The Contractor shall comply with all applicable Codes, Standards, Specifications, etc. related to all aspects of the Project.

Where there are telephones, light or power poles, water mains, conduits, pipes or drains or other construction, either public or private, in or on the streets or alleys, the Work shall be so conducted that no interruption or delay will be caused in the operation or use of the same. Proper written notice shall be given to all affected parties prior to proceeding with the Work.

The Contractor shall not be permitted to interfere with public travel and convenience by grading or tearing up streets indiscriminately, but the Work of constructing the various items in this contract shall proceed in an orderly, systematic and progressive manner.

GC – 10 - DISEASE REGULATIONS - The Contractor shall enforce all sanitary regulations and take all precautions against infectious diseases as the Project Manager may deem necessary. Should any infectious or contagious diseases occur among his employees, he shall arrange for the immediate removal of the employee from the Site and isolation of all persons connected with the Work.

GC – 11 - CONTRACTOR TO CHECK PLANS, SPECIFICATIONS, AND DATA - The Contractor shall verify all dimensions, quantities, and details shown on the plans, supplementary drawings, or schedules, and shall notify the Project Manager of all errors, omissions, conflicts and discrepancies found therein within three (3) working days of discovery. Failure to discover or correct errors, conflictions, or discrepancies shall not relieve the Contractor of full responsibility for unsatisfactory Work, faulty construction, or improper operation resulting therefrom nor from rectifying such condition at its own expense.

GC – 12 - MATERIALS AND WORKMANSHIP - All material shall be new and the workmanship shall, in every respect, be in conformity with approved modern practice and with prevailing standards of performance and quality. In the event of a dispute, the Project Manager's decision shall be final. Wherever the Plans, Specifications, Contract Documents, or the directions of the Project Manager are unclear as to what is permissible and/or fail to note the quality of any Work, that interpretation will be made by the Project Manager, which is in accordance with approved modern practice, to meet the particular requirements of the Contract.

Florida Power & Light Company will provide all Project conduit, conduit couplings, conduit bends, splice boxes, pull boxes, equipment pads, equipment chambers, etc. necessary for the installation of those facilities to be installed for FP&L's use. Contractor shall be responsible for obtaining materials from FP&L. Contractor shall also be responsible for the quantity and maintaining quality of the material obtained from FP&L. Contractor shall be responsible for obtaining and providing all non-FP&L provided materials including but not limited to AT&T materials and Comcast materials. Contractor shall be responsible for material storage and security. Contractor shall provide details for storage and security in Contractor's Work Plan.

GC – 13 - COMPLETED WORK, INSPECTIONS AND ACCEPTANCE - Contractor shall schedule Project inspections two (2) business days in advance with FP&L and the City. Contractor shall coordinate with FP&L to have all completed work inspected and accepted in writing by the FP&L inspector. Contractor will secure such acceptance in writing for Completed tasks prior to obtaining approval and acceptance from the City, and prior to issuance of a pay request being released for progress payment. Contractor shall notify the Project Manager in advance of scheduled FP&L inspections as to the work to be inspected and the scheduled time. As-built survey, sealed and signed by the a Professional Surveyor registered in the State of Florida, for each task shall be provided by the Contractor prior to City's acceptance and final payment.

GC – 14 - SAFEGUARDING MARKS - The Contractor shall safeguard all points, stakes, grade marks, monuments, and bench marks made or established on the Work, bear the cost of re-establishing same if disturbed, or bear the entire expense of rectifying Work improperly installed due to not maintaining or protecting or for removing without authorization, such established points, stakes and marks. The Contractor shall safeguard all existing and known property corners, monuments and marks not related to the Work and, if required, shall bear the cost of having them re-established by a Professional surveyor registered in the State of Florida if disturbed or destroyed during the course of construction.

GC – 15 - RESTROOM FACILITIES - Contractor shall provide portable toilet facilities for employee's use at a location within the Work site to be determined by the City. Employees shall not relieve themselves at any other place within the City Limits.

GC – 16 - PROGRESS MEETINGS - Weekly Status meetings will be conducted with representatives from the City, FP&L and the Contractor. Contractor shall budget time to participate in such meetings. A well-run Project should result in short meetings.

GC – 17 - ISSUE RESOLUTION - Should Contractor become engaged in a dispute with a resident or a City employee, the Contractor shall report the situation to the Project Manager immediately. It shall be mandatory that the City participate in any dispute resolution. Failure of Contractor personnel to notify the City shall obligate Contractor to replace the offending employee immediately if requested by the City.

GC – 18 - CITY SECURITY-CONTRACTOR AND SUBCONTRACTOR EMPLOYEE INFORMATION Prior to commencing work, Contractor shall provide to the City a list of all personnel and sub-contractors on site. The list will include the name, address, birth date and driver's license number for all personnel. All personnel and subcontractors on site will have on their person a company photo ID during all stages of the construction. Contractor shall provide standard required personal information per current City procedures.

GC – 19 - POST-CONSTRUCTION SURVEY - The Contractor shall provide as-built survey, sealed and signed by a registered surveyor in the State of Florida, as a condition of final payment.

GC – 20 - KEY PERSONNEL - Contractor shall provide as part of the Work Plan, resumes for all key project personnel providing supervision and project management functions. Resumes shall include work history and years of experience performing this type work. Contractor's onsite superintendent shall be knowledgeable and experienced in such overhead to underground conversion work

GC – 21 - EXISTING UTILITY SERVICE - All existing utility service shall be maintained with a minimum of interruption at the expense of the Contractor.

GC – 22 - JOB DESCRIPTION SIGNS – Contractor, at Contractor's expense, shall furnish, erect, and maintain suitable weatherproof signs on jobs over $100,000 containing the following information:

1. City Seal (in colors)
2. Project or Improvement Number
3. Job Description
4. Estimated Cost
5. Completion Date

Minimum size of sign shall be four feet high, eight feet wide and shall be suitably anchored. The entire sign shall be painted and present a pleasing appearance. Exact location of signs will be determined in the field. Two (2) signs will be required, one at each end of the job. All costs of this work shall be included in other parts of the work.

GC – 23 - FLORIDA EAST COAST RIGHT-OF-WAY - Whenever a City contractor is constructing within the Florida East Coast Railway Company's Right-of-Way, it will be mandatory that the contractor carry bodily injury and property damage insurance in amounts satisfactory to the Florida East Coast Company. This insurance requirement shall be verified by the contractor with the Florida East Coast Company prior to commencing work, and maintained during the life of the Contract.

GC – 24 - ACCIDENTS - The Contractor shall provide such equipment and facilities as are necessary and/or required, in the case of accidents, for first aide services to be provided to a person who may be injured during the project duration. The Contractor shall also comply with the OSHA requirements as defined in the United States Labor Code 29 CFR 1926.50.

In addition, the Contractor must report immediately to the Project Manager every accident to persons or damage to property, and shall furnish in writing full information, including testimony of witnesses regarding any and all accidents.

GC – 25 - SAFETY PRECAUTIONS - Contractor must adhere to the applicable environmental protection guidelines for the duration of a project. If hazardous waste materials are used, detected or generated at any time, the Project Manager must be immediately notified of each and every occurrence. The Contractor shall comply with all codes, ordinances, rules, orders and other legal requirements of public authorities (including OSHA, EPA, DERM, the City, Broward County, State of Florida, and Florida Building Code), which bear on the performance of the Work.

The Contractor shall take the responsibility to ensure that all Work is performed using adequate safeguards, including but not limited to: proper safe rigging, safety nets, fencing, scaffolding, barricades, chain link fencing, railings, barricades, steel plates, safety lights, and ladders that are necessary for the protection of its employees, as well as the public and City employees. All riggings and scaffolding shall be constructed with good sound materials, of adequate dimensions for their intended use, and substantially braced, tied or secured to ensure absolute safety for those required to use it, as well as those in the vicinity. All riggings, scaffolding, platforms, equipment guards, trenching, shoring, ladders and similar actions or equipment shall be OSHA approved, as applicable, and in accordance with all Federal, State and local regulations.

GC – 26 - DUST PREVENTION - The Contractor shall, by means of a water spray, or temporary asphalt pavement, take all necessary precautions to prevent or abate a dust nuisance arising from dry weather or Work in an incomplete stage. All costs of this Work shall be included in cost of other parts of the Work.

Should the Contractor fail to abate a dust nuisance, the Project Manager may stop the Work until the issue is resolved to the City's satisfaction.

GC – 27 - SITE CLEANUP AND RESTORATION – The Contractor shall remove all debris and unused or discarded materials from the work site daily. Contractor shall clean the work site to remove all directional drilling "Driller's Mud" materials. No "Driller's Mud" residue shall be allowed to remain in the soil or on the surface of the land or vegetation. All debris and drilling materials must be disposed of offsite at an approved location.

The Contractor shall promptly restore all areas disturbed that are outside the Project limits in equal or better condition at no additional cost to the City.

GC – 28 - COURTEOUS BEHAVIOR AND RESPECT FOR RESIDENTS AND PROPERTY – The Contractor and its employees, associates and sub-contractors shall maintain courteous behavior at all times and not engage in yelling, loud music, or other such activities. Contractor's employees shall not leave trash or other discarded items at the Work Site, especially on any private property. In the event complaints arise, Contractor shall immediately remove such offending employees from the project if requested to do so by the Project Manager. Contractor's employees shall not trespass on any private property unless necessary to complete the work but with prior permission from the owner.

Contractor shall notify and obtain permission from the residents 24 hours in advance when planning to work within the resident's property. In addition, Contractor shall notify the resident prior to entering their property to perform work or inspect/ investigate the work site. Contractor shall not block residents' driveways unnecessarily. Contractor shall not park equipment on landscaped areas when the vehicle is not needed for the current construction activities. Contractor shall be responsible for repair and/or replacement of all damaged landscaping within 48 hours including repairing vehicle wheel impressions, irrigation systems, lighting systems, structures, or any other items of resident's property. Contractor shall not destroy, damage, remove, or otherwise negatively impact any landscaping within or outside the right-of-way without prior approval from the Project Manager.

GC – 29 - PLACING BARRICADES AND WARNING LIGHTS - The Contractor shall furnish and place, at his own expense, all barricades, warning lights, automatic blinker lights and such devices necessary to properly protect the work and vehicular and pedestrian traffic. Should the Contractor fail to erect or maintain such barricades, warning lights, etc., the Project Manager may, after 24 hours' notice to the Contractor, proceed to have such barricades and warning lights placed and maintained by City or other forces and all costs incurred thereof charged to the Contractor and may be retained by the City from any monies due, or to become due, to the Contractor.

GC – 30 - TRAFFIC CONTROL - The Contractor shall coordinate all Work and obtain, through the City's Transportation and Mobility Department, Broward County, Florida Department of Transportation, as applicable, any permits required to detour traffic or close any street before starting to work in the road.

All traffic control devices, flashing lights, signs and barricades shall be maintained in working condition at all times and conform to Manual of Uniform Traffic Control Devices (MUTCD), latest edition.

GC – 31 - COORDINATION - The Contractor shall notify all utilities, transportation department, etc., in writing, with a copy to the Project Manager before construction is started and shall coordinate its Work with them. The Contractor shall cooperate with the owners of any underground or overhead utility lines in their removal, construction and rearrangement operations in order that services rendered by these parties will not be unnecessarily interrupted.

The Contractor shall arrange its Work and dispose of its materials so as to not interfere with the operation of other contractors engaged upon adjacent work, and to join its Work to that of others in a proper manner, and to perform its Work in the proper sequence in relation to that of other contractors as may be directed by the Project Manager.

Each Contractor shall be responsible for any damage done by it or its agents to the work performed by another contractor.

GC – 32 - WATER - Bulk water used for construction, flushing pipelines, and testing shall be obtained from fire hydrants. Contractor shall make payment for hydrant meter at Treasury Billing Office, 1st Floor, City Hall, 100 N. Andrews Avenue. With the paid receipt, contractor can pick up hydrant meter at the utility location office. No connection shall be made to a fire hydrant without a meter connected.

GC - 33 - PROHIBITION AGAINST CONTRACTING WITH SCRUTINIZED COMPANIES - As to any contract for goods or services of $1 million or more and as to the renewal of any contract for goods or services of $1 million or more, subject to *Odebrecht Construction, Inc., v. Prasad*, 876 F.Supp.2d 1305 (S.D. Fla. 2012), *affirmed, Odebrecht Construction, Inc., v. Secretary, Florida Department of Transportation*, 715 F.3d 1268 (11th Cir. 2013), with regard to the "Cuba Amendment," the Contractor certifies that it is not on the Scrutinized Companies with Activities in Sudan List or the Scrutinized Companies with Activities in the Iran Petroleum Energy Sector List, and that it does not have business operations in Cuba or Syria, as provided in section 287.135, Florida Statutes (2019), as may be amended or revised. As to any contract for goods or services of any amount and as to the renewal of any contract for goods or services of any amount, the Contractor certifies that it is not on the Scrutinized Companies that Boycott Israel List created Israel. The City may terminate this Agreement at the City's option if the Contractor is found to have submitted a false certification as provided under subsection (5) of section 287.135, Florida Statutes (2019), as may be amended or revised, or been placed on the Scrutinized Companies with Activities in Sudan List or the Scrutinized Companies with Activities in the Iran Petroleum Energy Sector List or the Scrutinized Companies that Boycott Israel List created pursuant to Section 215.4725, Florida Statutes (2019), or is engaged in a boycott of Israel or has been engaged in business operations in Cuba or Syria, as defined in Section 287.135, Florida Statutes (2019), as may be amended or revised.

GC - 34 - LOCATION OF UNDERGROUND FACILITIES - If the Proposer, for the purpose of responding to this solicitation, requests the location of underground facilities through the Sunshine State One-Call of Florida, Inc. notification system or through any person or entity providing a facility locating service, and underground facilities are marked with paint, stakes or other markings within the City pursuant to such a request, then the Proposer shall be deemed non-responsive to this solicitation in accordance with Section 2-184(5) of the City of Fort Lauderdale Code of Ordinances.

GC - 35 - USE OF FLORIDA LUMBER TIMBER AND OTHER FOREST PRODUCTS - In accordance with Florida Statute 255.20 (3), the City specifies that lumber, timber, and other forest products used for this Project shall be produced and manufactured in the State of Florida if such products are available and their price, fitness, and quality are equal. This requirement does not apply to plywood specified for monolithic concrete forms, if the structural or service requirements for timber for a particular job cannot be supplied by native species, or if the construction is financed in whole or in part from federal funds with the requirement that there be no restrictions as to species or place of manufacture.

The Bidder affirms by submitting a bid response to this solicitation that they will comply with section 255.20 (3) Florida Statutes.

GC - 36 - PUBLIC RECORDS/TRADE SECRETS/COPYRIGHT: The Proposer's response to the Solicitation is a public record pursuant to Florida law, which is subject to disclosure by the City under the State of Florida Public Records Law, Florida Statutes Chapter 119.07 ("Public Records Law"). The City shall permit public access to all documents, papers, letters or other material submitted in connection with this Solicitation and the Contract to be executed for this Solicitation, subject to the provisions of Chapter 119.07 of the Florida Statutes.

Any language contained in the Proposer's response to the Solicitation purporting to require confidentiality of any portion of the Proposer's response to the Solicitation, except to the extent that certain information is in the City's opinion a Trade Secret pursuant to Florida law, shall be void. If a Proposer submits any documents or other information to the City which the Proposer claims is Trade Secret information and exempt from Florida Statutes Chapter 119.07 ("Public Records Laws"), the Proposer shall clearly designate that it is a Trade Secret and that it is asserting that the document or information is exempt. The Proposer must specifically identify the exemption being claimed under Florida Statutes 119.07. The City shall be the final arbiter of whether any information contained in the Proposer's response to the Solicitation constitutes a Trade Secret. The City's determination of whether an exemption applies shall be final, and the proposer agrees to defend, indemnify, and hold harmless the City and the City's officers, employees, and agent, against any loss or damages incurred by any person or entity as a result of the City's treatment of records as public records. In addition, the proposer agrees to defend, indemnify, and hold harmless the City and the City's officers, employees, and agents, against any loss or damages incurred by any person or entity as a result of the City's treatment of records as exempt from disclosure or confidential. Proposals purporting to be subject to copyright protection in full or in part will be rejected. The proposer authorizes the City to publish, copy, and reproduce any and all documents submitted to the City bearing copyright symbols or otherwise purporting to be subject to copyright protection.

EXCEPT FOR CLEARLY MARKED PORTIONS THAT ARE BONA FIDE TRADE SECRETS PURSUANT TO FLORIDA LAW, DO NOT MARK YOUR RESPONSE TO THE SOLICITATION AS PROPRIETARY OR CONFIDENTIAL. DO NOT MARK YOUR RESPONSE TO THE SOLICITATION OR ANY PART THEREOF AS COPYRIGHTED.

IF THE CONTRACTOR HAS QUESTIONS REGARDING THE APPLICATION OF CHAPTER 119, FLORIDA STATUTES, TO THE CONTRACTOR'S DUTY TO PROVIDE PUBLIC RECORDS RELATING TO THIS CONTRACT, CONTACT THE CUSTODIAN OF PUBLIC RECORDS AT:

Telephone Number: **(954) 828-5002**

Mailing Address: **City Clerk's Office**
100 N. Andrews Avenue
Fort Lauderdale, Florida 33301-1016

E-mail: **prrcontract@fortlauderdale.gov**

Contractor shall:

1. Keep and maintain public records required by the City in order to perform the service.

2. Upon request from the City's custodian of public records, provide the City with a copy of the requested records or allow the records to be inspected or copied within a reasonable time at a cost that does not exceed the cost provided in Chapter 119, Florida Statutes (2019), as may be amended or revised, or as otherwise provided by law.

3. Ensure that public records that are exempt or confidential and exempt from public records disclosure requirements are not disclosed except as authorized by law for the

duration of the contract term and following completion of this contract if the Contractor does not transfer the records to the City.

4. Upon completion of the Contract, transfer, at no cost, to the City all public records in possession of the Contractor or keep and maintain public records required by the City to perform the service. If the Contractor transfers all public records to the City upon completion of this Contract, the Contractor shall destroy any duplicate public records that are exempt or confidential and exempt from public records disclosure requirements. If the Contractor keeps and maintains public records upon completion of this Contract, the Contractor shall meet all applicable requirements for retaining public records. All records stored electronically must be provided to the City, upon request from the City's custodian of public records, in a format that is compatible with the information technology systems of the City.

SPECIAL CONDITIONS

01. PURPOSE

The City of Fort Lauderdale, Florida (City) is seeking bids from qualified bidders, hereinafter referred to as the Contractor, to provide construction services in accordance with the terms, conditions, and specifications contained in this Invitation To Bid (ITB).

02. TRANSACTION FEES

The City uses BidSync (www.bidsync.com) to distribute and receive bids and proposals. There is no charge to vendors/contractors to register and participate in the solicitation process, nor will any fees be charged to the awarded contractor.

03. SUBMISSION OF BIDS

It is the sole responsibility of the Contractor to ensure that its bid is submitted electronically through BidSync at www.bidsync.com. **PAPER BID SUBMITALS WILL NOT BE ACCEPTED. PLEASE SUBMIT YOUR BID RESPONSE ELECTRONICALLY.**

04. INFORMATION OR CLARIFICATION

For information concerning procedures for responding to this solicitation, contact **Maureen Lewis**, **Procurement Specialist**, at (954) 828-5239 or email at maureenl@fortlauderdale.gov. Such contact shall be for clarification purposes only.

For information concerning technical specifications please utilize the Question/Answer platform provided by BidSync at www.bidsync.com. Questions of a material nature must be received prior to the cut-off date specified in the solicitation. Material changes, if any, to the scope of services or bidding procedures will only be transmitted by written addendum. (See addendum section of BidSync site). **Bidders please note**: No part of your bid can be submitted via FAX. No variation in price or conditions shall be permitted based upon a claim of ignorance. Submission of a bid will be considered evidence that the bidder has familiarized himself with the nature and extent of the work, and the equipment, materials, and labor required. The entire bid response must be submitted in accordance with all specifications contained in this solicitation. The questions and answers submitted in BidSync shall become part of any contract that is created from this ITB.

05. CONTRACT TIME

5.1 The Contractor recognizes that TIME IS OF THE ESSENCE. The Work shall commence within **30** calendar days of the date of the Notice to Proceed.

5.2 The Work shall be Substantially Completed within **180** calendar days after the date the Notice to Proceed is issued.

The City reserves the right to waive any informality in any bid and to reject any or all bids. The City reserves the right to reduce or delete any of the bid items.

At the time of contract award, the City reserves the right to set a maximum dollar limit that may be expended on this Project. Contract quantities of any or all items may be increased, reduced, or eliminated to adjust the contract amount to coincide with the amount of work necessary, or to bring the contract value to within the established limit. All quantities are estimated and the City reserves the right to increase, reduce, or eliminate the contract quantities in any amount.

The undersigned bidder affirms that he has or will obtain all equipment necessary to complete the work described, that he has or will obtain all required permits and licenses from the appropriate agencies, and that his firm is authorized to do business in the State of Florida.

06. BID SECURITY

A bid bond for **FIVE percent (5%)** of the bid amount shall accompany each proposal.

07. REQUIRED LICENSES/CERTIFICATIONS

Contractor must possess the following licenses/certifications to be considered for award:

All undergrounding work shall be performed by contractors who are pre-qualified by FPL and who have successfully completed similar type of undergrounding projects preferably in the local Tri-County area comprising of Palm Beach, Broward and Miami-Dade counties. Any non-undergrounding work shall be performed by a licensed General Contractor in the State of Florida. The City may, at its discretion, allow a Registered Contractor in Broward County, to perform non-undergrounding work, who can demonstrate successful completion of similar type of work.

Note: Contractor must have proper licensing and shall submit evidence of same with its bid response.

08. SPECIFIC EXPERIENCE REQUIRED

The following expertise is required to be considered for this Contract. Specific references attesting to this expertise must be submitted with the bid response.

The contractor shall have at previous experience in undergrounding utilities through directional boring, in the last **five (5)** years, preferably in the local, Tri-County area. Bidder shall submit proof of successful pre-qualification through FPL and undergrounding utilities experience for a minimum of **three (3)** projects of similar scope and scale (or larger) and shall, for each project listed, identify location; dates of construction; project name and overall scope of work; and client's name, address, telephone number and e-mail address.

Any non-undergrounding work shall be performed by a licensed General Contractor in the State of Florida. The City may, at its discretion, allow a Registered Contractor in Broward County, to perform non-undergrounding work, who can demonstrate successful completion of similar type of work.

NOTE: REFERENCES SHALL NOT INCLUDE ONLY CITY OF FORT LAUDERDALE EMPLOYEES OR WORK PERFORMED FOR THE CITY. THE CITY IS ALSO INTERESTED IN WORK EXPERIENCE AND REFERENCES FROM ENTITIES OTHER THAN THE CITY OF FORT LAUDERDALE.

By signing this bid solicitation, contractor is affirming that this expertise will be provided for this Contract at no additional charge.

09. BID ALLOWANCE

Allowance for permits: Payments will be made to the contractor based on the actual cost of permits upon submission of paid permit receipts. The City shall not pay for other costs related to obtaining or securing permits.

The amount indicated is intended to be sufficient to cover the entire project. If the City's permit fees exceed the allowance indicated, the City will reimburse the contractor the actual amount of the City permit fees required for project completion.

Allowances	$
Permit fees and testing allowance	50,000
Landscaping	100,000
TOTAL	**150,000.00**

Note: The City will add this allowance to your bid.

10. INSURANCE REQUIREMENTS *(See Article 10, Bonds and Insurance, of the Contract for details)*

Insurance

As a condition precedent to the effectiveness of this Agreement, during the term of this Agreement and during any renewal or extension term of this Agreement, the Contractor, at its sole expense, shall provide insurance of such types and with such terms and limits as noted below. Providing proof of and maintaining adequate insurance coverage are material obligations of the Contractor. The Contractor shall provide the City a certificate of insurance evidencing such coverage. The Contractor's insurance coverage shall be primary insurance for all applicable policies. The limits of coverage under each policy maintained by the Contractor shall not be interpreted as limiting the Contractor's liability and obligations under this Agreement. All insurance policies shall be through insurers authorized or eligible to write policies in the State of Florida and possess an A.M. Best rating of A-, VII or better, subject to approval by the City's Risk Manager.

The coverages, limits, and/or endorsements required herein protect the interests of the City, and these coverages, limits, and/or endorsements shall in no way be required to be relied upon by the Contractor for assessing the extent or determining appropriate types and limits of coverage to protect the Contractor against any loss exposures, whether as a result of this Agreement or otherwise. The requirements contained herein, as well as the City's review or acknowledgement, are not intended to and shall not in any manner limit or qualify the liabilities and obligations assumed by the Contractor under this Agreement.

The following insurance policies and coverages are required:

Commercial General Liability
Coverage must be afforded under a Commercial General Liability policy with limits not less than:

- $1,000,000 each occurrence and $2,000,000 aggregate for Bodily Injury, Property Damage, and Personal and Advertising Injury
- $1,000,000 each occurrence and $2,000,000 aggregate for Products and Completed Operations

Policy must include coverage for contractual liability and independent contractors.

The City, a Florida municipal corporation, its officials, employees, and volunteers are to be covered as an additional insured with a CG 20 26 04 13 Additional Insured – Designated Person or Organization Endorsement or similar endorsement providing equal or broader Additional Insured Coverage with respect to liability arising out of activities performed by or on behalf of the Contractor. The coverage shall contain no special limitation on the scope of protection afforded to the City, its officials, employees, and volunteers.

Business Automobile Liability
Coverage must be afforded for all Owned, Hired, Scheduled, and Non-Owned vehicles for Bodily Injury and Property Damage in an amount not less than $1,000,000 combined single limit each accident.

If the Contractor does not own vehicles, the Contractor shall maintain coverage for Hired and Non-Owned Auto Liability, which may be satisfied by way of endorsement to the Commercial General Liability policy or separate Business Auto Liability policy.

Crane and Rigging Liability
Coverage must be afforded for any crane operations under the Commercial General or Business Automobile Liability policy as necessary, in line with the limits of the associated policy.

Workers' Compensation and Employer's Liability

Coverage must be afforded per Chapter 440, Florida Statutes. Any person or entity performing work for or on behalf of the City must provide Workers' Compensation insurance. Exceptions and exemptions will be allowed by the City's Risk Manager, if they are in accordance with Florida Statute.

The Contractor waives, and the Contractor shall ensure that the Contractor's insurance carrier waives, all subrogation rights against the City, its officials, employees, and volunteers for all losses or damages. The City requires the policy to be endorsed with WC 00 03 13 Waiver of our Right to Recover from Others or equivalent.

The Contractor must be in compliance with all applicable State and federal workers' compensation laws, including the U.S. Longshore Harbor Workers' Act and the Jones Act, if applicable.

Insurance Certificate Requirements

a. The Contractor shall provide the City with valid Certificates of Insurance (binders are unacceptable) no later than thirty (30) days prior to the start of work contemplated in this Agreement.
b. The Contractor shall provide to the City a Certificate of Insurance having a thirty (30) day notice of cancellation; ten (10) days' notice if cancellation is for nonpayment of premium.
c. In the event that the insurer is unable to accommodate the cancellation notice requirement, it shall be the responsibility of the Contractor to provide the proper notice. Such notification will be in writing by registered mail, return receipt requested, and addressed to the certificate holder.
d. In the event the Agreement term goes beyond the expiration date of the insurance policy, the Contractor shall provide the City with an updated Certificate of Insurance no later than ten (10) days prior to the expiration of the insurance currently in effect. The City reserves the right to suspend the Agreement until this requirement is met.
e. The Certificate of Insurance shall indicate whether coverage is provided under a claims-made or occurrence form. If any coverage is provided on a claims-made form, the Certificate of Insurance must show a retroactive date, which shall be the effective date of the initial contract or prior.
f. The City shall be named as an Additional Insured on all liability policies, with the exception of Workers' Compensation.
g. The City shall be granted a Waiver of Subrogation on the Contractor's Workers' Compensation insurance policy.
h. The title of the Agreement, Bid/Contract number, event dates, or other identifying reference must be listed on the Certificate of Insurance.

The Certificate Holder should read as follows:

City of Fort Lauderdale
100 N. Andrews Avenue

Fort Lauderdale, FL 33301

The Contractor has the sole responsibility for all insurance premiums and shall be fully and solely responsible for any costs or expenses as a result of a coverage deductible, co-insurance penalty, or self-insured retention; including any loss not covered because of the operation of such deductible, co-insurance penalty, self-insured retention, or coverage exclusion or limitation. Any costs for adding the City as an Additional Insured shall be at the Contractor's expense.

If the Contractor's primary insurance policy/policies do not meet the minimum requirements, as set forth in this Agreement, the Contractor may provide evidence of an Umbrella/Excess insurance policy to comply with this requirement.

The Contractor's insurance coverage shall be primary insurance as respects to the City, a Florida municipal corporation, its officials, employees, and volunteers. Any insurance or self-insurance maintained by the City, a Florida municipal corporation, its officials, employees, or volunteers shall be non-contributory.

Any exclusion or provision in any insurance policy maintained by the Contractor that excludes coverage required in this Agreement shall be deemed unacceptable and shall be considered breach of contract.

All required insurance policies must be maintained until the contract work has been accepted by the City, or until this Agreement is terminated, whichever is later. Any lapse in coverage shall be considered breach of contract. In addition, Contractor must provide to the City confirmation of coverage renewal via an updated certificate should any policies expire prior to the expiration of this Agreement. The City reserves the right to review, at any time, coverage forms and limits of Contractor's insurance policies.

The Contractor shall provide notice of any and all claims, accidents, and any other occurrences associated with this Agreement to the Contractor's insurance company or companies and the City's Risk Management office, as soon as practical.

It is the Contractor's responsibility to ensure that any and all of the Contractor's independent contractors and subcontractors comply with these insurance requirements. All coverages for independent contractors and subcontractors shall be subject to all of the applicable requirements stated herein. Any and all deficiencies are the responsibility of the Contractor.

NOTE: CITY PROJECT NUMBER, NAME AND BID NUMBER MUST APPEAR ON EACH CERTIFICATE, AND THE CITY OF FORT LAUDERDALE MUST BE NAMED ON THE CERTIFICATE AS AN "ADDITIONAL INSURED" ON GENERAL LIABILITY POLICIES.

A Sample Insurance Certificate shall be included with the proposal to demonstrate the firm's ability to comply with insurance requirements. Provide a previous certificate or other evidence listing the insurance companies' names for all required coverage, and the dollar amounts of the coverage.

11. PERFORMANCE AND PAYMENT BOND: 100%
Number of awards anticipated: 1

12. CITY PROJECT MANAGER

The Project Manager is hereby designated by the City as **Don Gentile** whose address is 100 North Andrews, 4th Floor, Fort Lauderdale, Florida 33301-1016, telephone number: **(954) 828-5071**, and e-mail address is **dgentile@fortlauderdale.gov**. The Project Manager will assume all duties and responsibilities and will have the rights and authorities assigned to the Project Manager in the Contract Documents in connection with completion of the Work in accordance with this Agreement.

13. LIQUIDATED DAMAGES *(See Article 16, Liquidated Damages, of the Contract for details)*
Upon failure of the Contractor to complete the Work within the time specified for completion, the Contractor shall pay to the City the sum of **Five Hundred Dollars ($500.00)** for each and every calendar day that the completion of the Work is delayed beyond the time specified in this Agreement for completion, as fixed and agreed liquidated damages and not as a penalty, so long as the delay is caused by the Contractor. (See Article 16, Liquidated Damages Clause, of the Contract)

14. PAYMENT (*See Article 7, Payment, of the Contract for other details*)
The City shall make payment to the Contractor through utilization of the City's P-Card Program. The City has implemented a Purchasing Card (P-Card) Program utilizing both the VISA and MASTERCARD networks. Purchases from this contract will be made utilizing the City's Purchasing Card. Contractor will receive payment from the purchasing card in the same manner as other credit card purchases. Accordingly, bidders must presently have the ability to accept these credit cards or take whatever steps necessary to implement the ability before the start of the contract term, or contract award by the City. All costs associated with the Contractor's participation in this purchasing program shall be borne by the Contractor. The City reserves the right to revise this program as necessary.

Payment Card Industry (PCI) Compliance

Contractor agrees to comply with all applicable state, federal and international laws, as well as industry best practices, governing the collection, access, use, disclosure, safeguarding and destruction of Protected Information.

Contractor and/or any subcontractor that handles credit card data must be, and remain, PCI compliant under the current standards and will provide documentation confirming compliance upon request by the City of Fort Lauderdale, failure to produce documentation could result in termination of the contract.

15. WORK SCHEDULE (including overtime hours):
Regular work hours: **8:00 am to 5:00 pm, Monday through Friday.**
City Inspector Hours: **8:00 am to 4:30 pm, Monday through Friday.**

Any inspection requested by the contractor outside those hours will be considered overtime to be paid by the Contractor.

16. INSPECTION OVERTIME COST: $174/hr.

SPECIAL INSTRUCTIONS

INTENT OF BID -
The intent of this Bid is to award a one-time contract for the conversion of existing overhead electric and communication utilities from overhead to underground in the area known as Las Olas Isles (also known as Area B) to the lowest responsive and responsible bidder.

QUALIFICATIONS OF BIDDERS
All undergrounding work shall be performed by Bidders who are pre-qualified by FPL and who have successfully completed similar types of at least three (3) undergrounding projects preferably in the local, Tri-County area in the last five (5) years. Any non-undergrounding work shall be performed by a licensed General Contractor in the State of Florida. The City may, at its discretion, allow a Registered Contractor in Broward County, to perform non-undergrounding work, who can demonstrate successful completion of similar type of work.

LOCATION OF UNDERGROUND FACILITIES - If the Bidder, for the purpose of responding to this solicitation, requests the location of underground facilities through the Sunshine State One-Call of Florida, Inc. notification system or through any person or entity providing a facility locating service, and underground facilities are marked with paint, stakes or other markings within the City pursuant to such a request, then the Bidder shall be deemed non-responsive to this solicitation.

Work Plan & Activities - Bidder shall, in its bid response, submit a comprehensive and defined "Work Plan". This plan should detail the Bidder's understanding of and compliance with all work requirements stated herein. The "Work Plan" should delineate by "Work Unit" the type of excavation method (directional boring, soft dig techniques, machine trenching, or manual trenching) that the bidder proposes to utilize in the completion of the Work. Utility provided materials are typically based on installation by Directional Bore/Horizontal Drilling techniques. Bidder shall be responsible for coordinating any material changes required for alternate installation methods. Bidder shall be responsible for all activities necessary to complete the work in a safe and timely manner including but limited to such activities as safety and traffic management; employee training; storage and transportation of materials, labor, and equipment; workforce supervision; material security; drug testing; environmental protection; progress meeting participation; notifications; construction; site restoration; inspections; documentation; and any other project requirements necessary to meet the project goals and objectives.

CITY OF FORT LAUDERDALE
CONSTRUCTION AGREEMENT

THIS AGREEMENT made and entered into this _____ day of _____, 20__, by and between the City of Fort Lauderdale, a Florida municipal corporation (City) and _____, (Contractor), (Parties);

WHEREAS, the City desires to retain a contractor for the Project as expressed in its Invitation to Bid No., _____, Project Number, _____, which was opened on _____; and,

WHEREAS, the Contractor has expressed its willingness and capability to perform the necessary work to accomplish the Project.

NOW, THEREFORE, the City and the Contractor, in consideration of the mutual covenants and conditions contained herein and for other good and valuable consideration, the receipt and sufficiency is hereby acknowledged, agree as follows:

ARTICLE 1 – DEFINITIONS

Whenever used in this Agreement or in other Contract Documents, the following terms have the meanings indicated which are applicable to both the singular and plural forms:

1.1 Agreement – This written Agreement between the City and the Contractor covering the work to be performed including other Contract Documents that are attached to or incorporated in the Agreement.

1.2 Application for Payment – The form accepted by the City which is to be used by the Contractor in requesting progress or final payment and which is to include such supporting documentation as is required by the Contract Documents.

1.3 Approve – The word approve is defined to mean review of the material, equipment or methods for general compliance with design concepts and with the information given in the Contract Documents. It does not imply a responsibility on the part of the City to verify in every detail conformance with plans and specifications.

1.4 Bid – The offer or Bid of the Contractor submitted on the prescribed form setting forth the total prices for the Work to be performed.

1.5 Bid Documents – Advertisement for Invitation to Bids, the Instructions to Bidders, the Bid Form (with supplemental affidavits and sample agreements), the Contract Forms, General Conditions, the Supplementary Conditions, the Specifications, and the Plans, which documents all become an integral part of the Contract Documents.

1.6 Certificate of Substantial Completion - Certificate provided by the City certifying that all Work, excluding the punch list items, has been completed, inspected, and accepted by the City.

1.7 Change Order - A change order is defined as a written order to a contractor approved by the City, authorizing a revision of an underlying agreement between the City and a contractor that is directly related to the original scope of work or an adjustment in the original contract price or the contract time directly related to the original scope of work, issued on or after the effective date of the contract.

1.8 City – The City of Fort Lauderdale, Florida, including but not limited to its employees, agents, officials, representatives, contractors, subcontractors, volunteers, successors and assigns, with whom the Contractor has entered into the Agreement and for whom the Work is to be provided.

1.9 Contract Documents – The Contract Documents shall consist of this Agreement, Exhibits to this Agreement, Public Construction Bond, Performance Bond, Payment Bond and Certificates of Insurance, Notice of Award and Notice to Proceed, General Conditions, Special Conditions, Technical Specifications, Plans/Drawings, Addenda, Bid Form and supplement Affidavits and Agreements, all applicable provisions of State and Federal Law and any modification, including Change Orders or written amendments duly delivered after execution of Agreement, Invitation to Bid, Instructions to Bidders and Bid Bond, Contractor's response to the City's Invitation to Bid, Schedule of Completion, Schedule of Values, all amendments, modifications and supplements, work directive changes issued on or after the Effective Date of the Agreement, as well as any additional documents that are required to be submitted under the Agreement.

Permits on file with the City and or those permits to be obtained shall be considered directive in nature and will be considered a part of this Agreement. A copy of all permits shall be given to the City for inclusion in the Contract Documents. Terms of permits shall be met prior to acceptance of the Work and release of the final payment.

1.10 Contract Price – The monies payable to the Contractor by the City under the Contract Documents and in accordance with the line item unit prices listed in the Bid.

1.11 Contract Time – The number of calendar days stated in the Agreement for the completion of the Work. The dates on which the work shall be started and shall be completed as stated in the Notice to Proceed.

1.12 Contractor – The person, firm, company, or corporation with whom the City has entered into the Agreement, including but not limited to its employees, agents, representatives, contractors, subcontractors, their subcontractors and their other successors and assigns.

1.13 Day – A calendar day of twenty-four (24) hours ending at midnight.

1.14 Defective – An adjective which when modifying the word "Work" refers to work that is unsatisfactory, faulty, or deficient, or does not conform to the Contract Documents or does not meet the requirements of any inspection, test or approval referred to in the Contract Documents, or has been damaged prior to the Project Manager's recommendation of final payment.

1.15 Effective Date of the Agreement – The effective date of the Agreement shall be the date the City Commission approves the work. The contractor shall provide all required payment and performance bonds and insurances to the City within ten (10) calendar days following the City Commission approval. Upon verification of all bonds and insurances, the City will issue a notice to proceed (NTP) to the Contractor.

1.16 Final Completion Date – The date the Work is completed, including completion of the final punch list, and delivered along with those items specified in the Contract Documents and is accepted by the City.

1.17 Hazardous Materials (HAZMAT) - Any solid, liquid, or gaseous material that is toxic, flammable, radioactive, corrosive, chemically reactive, or unstable upon prolonged storage in quantities that could pose a threat to life, property, or the environment defined in Section 101(14) of Comprehensive Environmental Response, Compensation and Liability Act of 1980 and in 40 CFR 300.6. Also defined by 49 CFR 171.8 as a substance or material designated by the Secretary of Transportation to be capable of posing an unreasonable risk to health, safety, and property when transported in commerce and which has been so designated.

1.18 Hazardous Substance - As defined by Section 101(14) of the Comprehensive Environmental Response, Compensation and Liability Act; any substance designated pursuant to Section 311(b) (2) (A) of the Clean Water Act; any element, compound, mixture, solution or substance designated pursuant to Section 102 identified under or listed pursuant to Section 3001 of the Solid Waste Disposal Act {but not including any waste listed under Section 307[a] of the Clean Water Act}; any hazardous air pollutant listed under Section 112 of the Clean Air Act; and any imminently hazardous chemical substance or mixture pursuant to Section 7 of the Toxic Substances Control Act. The term does not include petroleum, including crude oil or any fraction thereof, which is not otherwise specifically listed or designated as a hazardous substance in the first sentence of this paragraph, and the term does not include natural gas, natural gas liquids, liquefied natural gas, or synthetic gas usable for fuel (or mixtures of natural gas and such synthetic gas).

1.19 Hazardous Waste - Those solid wastes designated by OSHA in accordance with 40 CFR 261 due to the properties of ignitability, corrosivity, reactivity, or toxicity. Any material that is subject to the Hazardous Waste Manifest requirements of the EPA specified in 40 CFR Part 262.

1.20 Holidays - Those designated non-work days as established by the City Commission of the City of Fort Lauderdale.

1.21 Inspection – The term "inspection" and the act of inspecting as used in this Agreement is defined to mean the examination of construction to ensure that it conforms to the design concept expressed in the plans and specifications. This term shall not be construed to mean supervision, superintending and/or overseeing.

1.22 Notice of Award - The written notice by City to the Contractor stating that upon compliance by the Contractor with the conditions precedent enumerated therein, within the time specified that the City will sign and deliver this Agreement.

1.23 Notice to Proceed – A written notice given by the City to the Contractor fixing the date on which the Contract Time will commence to run. Contractor will immediately commence work upon receipt of the Notice to Proceed.

1.24 Plans - The drawings which show the character and scope of the work to be performed and which have been prepared or approved by the City and are referred to in the Contract Documents.

1.25 Premises (otherwise known as Site or Work Site) – means the land, buildings, facilities, etc. upon which the Work is to be performed.

1.26 Project – The total construction of the Work to be provided as defined in the Contract Documents.

1.27 Project Manager - The employee of the City, or other designated individual who is herein referred to as the Project Manager, will assume all duties and responsibilities and will have the rights and authorities assigned to the Project Manager in the contract Documents in connection with completion of the Work in accordance with this Agreement. The Project Manager, or designee, shall be the authorized agent for the City unless otherwise specified.

1.28 Punch List - The City's list of Work yet to be done or be corrected by the Contractor, before the Final Completion date can be determined by the City.

1.29 Record Documents - A complete set of all specifications, drawings, addenda, modifications, shop drawings, submittals and samples annotated to show all changes made during the construction process.

1.30 Record Drawings or "As-Builts" - A set of drawings which show significant changes in the work made during construction and which are usually based on drawings marked up in the field and other data furnished by the contractor. These documents will be signed and sealed by the Engineer of Record or a Professional Land Surveyor licensed in the State of Florida.

1.31 Substantially Completed Date – A date when the Contractor has requested in writing, stating that the Work is substantially completed and is ready for an inspection and issuance of a final punch list for the Project.

1.32 Work – The entire completed delivered product or the various separately identifiable parts thereof required to be furnished under the Contract Documents. Work is the result of performing services, furnishing labor and furnishing and incorporating material and equipment into the product, all as required by the Contract Documents.

ARTICLE 2 – SCOPE OF WORK

2.1 The Contractor shall complete all work as specified or indicated in the Contract Documents. The Project for which the Work under the Contract Documents may be the whole or only part is generally described as follows:

LAS OLAS ISLES UNDERGROUNDING OF OVERHEAD UTILITIES
ITB 12453-613 PROJECT 11715

2.2 All Work for the Project shall be constructed in accordance with the approved plans and Specifications. The Work generally involves:

PROJECT DESCRIPTION

This Project is located in an area known as "Las Olas Isles" (Area B). It is bounded by Las Olas Boulevard on the North, New River on the South, Isles of Palm Drive on the East and Mola Avenue to the West, in the City of Fort Lauderdale. The work to be accomplished under this contract includes, but is not limited to, furnishing all labor, materials, equipment, tools, accessories, etc. and performing all related work such that overhead utilities belonging to Florida Power & Light (FPL), Comcast, ATT and any other utility could be undergrounded. It includes, but is not limited to, the installation of conduits, utility underground lines, hand holes, cable pull boxes, concrete transformer pads, pad mounted transformers, pad mounted switches, pad-mounted capacitors, and various other utility equipment and devices.

Other work includes:

1) Installation of conduits and connections to provide single phase power supply for each property
2) Milling, resurfacing and thermostriping of all streets where undergrounding work has been performed
3) Landscaping, primarily around the cabinets, transformers and as directed
4) Concrete curbing (D Curb)
5) All restoration according to the standards of the entities having jurisdiction over that work

All work is to be performed strictly in accordance with the plans and contract documents.

2.3 Within ten (10) days of the execution of this Agreement, the Contractor shall submit a Construction Schedule, Schedule of Values and a listing of all personnel employed. The general sequence of the Work shall be submitted by the Contractor and approved by the City before any work commences. The City reserves the right to issue construction directives necessary to facilitate the Work or to minimize any conflict with operations.

ARTICLE 3 – PROJECT MANAGER

3.1 The Project Manager is hereby designated by the City as **Don Gentile**, whose address is 100 N. Andrews Avenue, 4th Floor, Fort Lauderdale, FL 33301, telephone number: **(954) 828-5071**, and email address is **dgentile@fortlauderdale.gov**. The Project

Manager will assume all duties and responsibilities and will have the rights and authorities assigned to the Project Manager in the Contract Documents in connection with completion of the Work in accordance with this Agreement.

ARTICLE 4 – CONTRACT DOCUMENTS

The Contract Documents which comprise the entire Agreement between the City and Contractor are attached to this Agreement, are made a part hereof and consist of the following:

4.1 This Agreement.

4.2 Exhibits to this Agreement: (Plans sheets [ ] to [ ] inclusive).

4.3 Public Construction Bond, Performance Bond, Payment Bond and Certificates of Insurance.

4.4 Notice of Award and Notice to Proceed.

4.5 General Conditions as amended by the Special Conditions.

4.6 Technical Specifications.

4.7 Plans/Drawings.

4.8 Addenda number _____ through _____, inclusive.

4.9 Bid Form and supplement Affidavits and Agreements.

4.10 All applicable provisions of State and Federal Law.

4.11 Invitation to Bid No., _____, Instructions to Bidders, and Bid Bond.

4.12 Contractor's response to the City's Invitation to Bid No., _____, dated _____.

4.13 Schedule of Completion.

4.14 All amendments, modifications and supplements, change orders and work directive Changes, issued on or after the Effective Date of the Agreement.

4.15 Any additional documents that are required to be submitted under the Agreement.

4.16 Permits on file with the City and or those permits to be obtained shall be considered directive in nature and will be considered a part of this Agreement.

In the event of any conflict between the documents or any ambiguity or missing specification or instruction, the following priority is established:

a. Agreement.

b. Approved change orders, addenda or amendments.

c. Specifications (quality) and Drawings (location and quantity).

d. Supplemental conditions or special terms.

e. General Terms and Conditions.

f. This Agreement dated _____, and any attachments.

g. Invitation to Bid No., _____, and the specifications prepared by the City.

h. Contractor's response to the City's Invitation to Bid No., _____, dated _____.

i. Schedule of Values.

j. Schedule of Completion.

If during the performance of the Work, Contractor finds a conflict, error or discrepancy in the Contract Documents, Contractor shall so report to the Project Manager, in writing, at once and before proceeding with the Work affected shall obtain a written interpretation or clarification from the City.

It is the intent of the specifications and plans to describe a complete Project to be constructed in accordance with the Contract Documents. Any Work that may reasonably be inferred from the specifications or plans as being required to produce the intended result shall be supplied whether or not it is specifically called for. When words which have a well-known technical or trade meaning are used to describe Work, materials, or equipment, such works shall be interpreted in accordance with such meaning. Reference to standard specifications, manuals or codes of any technical society, organization or associations, or to the code of any governmental authority whether such reference be specific or implied, shall mean the latest standard specification, manual or code in effect as of the Effective Date of this Agreement, except as may be otherwise specifically stated. However, no provision of any referenced standard specification, manual or code (whether or not specifically incorporated by reference in the Contract Documents) shall change the duties and responsibilities of the City, the Contractor, or any of their agents or employees from those set forth in the Contract Documents.

ARTICLE 5 – CONTRACT TIME

5.1 The Contractor recognizes that **TIME IS OF THE ESSENCE.** The Work shall commence within 30 calendar days of the date of the Notice to Proceed.

5.2 The Work shall be Substantially Completed within 180 calendar days after the date the Notice to Proceed is issued.

ARTICLE 6 – CONTRACT PRICE

6.1 City shall pay Contractor for performance of the Work in accordance with Article 7, subject to additions and deletions by Change Order, as provided for in this Agreement.

6.2 The parties expressly agree that the Contract Price, which shall not exceed the amount of $_____, constitutes the total maximum compensation payable to Contractor for performing the Work, plus any Work done pursuant to a Change Order. The Contract Price is in accordance with the line item unit prices listed in the Bid. Line items are based on a unit price cost multiplied by a defined quantity. Any additional duties, responsibilities and obligations assigned to or undertaken by Contractor shall be at Contractor's expense without change to the Contract Price.

6.3 The Contract Price constitutes the compensation payable to Contractor for performing the Work plus any Work done pursuant to a Change Order. All duties, responsibilities and obligations assigned to or undertaken by Contractor shall be at Contractor's expense without change in the Contract price.

ARTICLE 7 – PAYMENT

7.1 Contractor shall submit Applications for Payment in accordance with the Contract Documents. Applications for Payment will be processed by City as provided in the General Conditions.

7.2 Progress Payments. City shall make progress payments on account of the Contract Price on the basis of Contractor's monthly Applications for Payment, which shall be submitted by the Contractor between the first (1st) and the tenth (10th) day after the end of each calendar month for which payment is requested. All progress payments will be made on the basis of the progress of the Work completed.

7.3 Prior to Final Completion, progress payments will be made in an amount equal to ninety percent (90%) of the value of Work completed less in each case the aggregate of payments previously made.

7.4 Final Payment. Upon final completion of the Work in accordance with the General Conditions, as may be supplemented, the City shall pay Contractor an amount sufficient to increase total payments to one-hundred percent (100%) of the Contract Price. However, not less than ten percent (10%) of the Contract Price shall be retained until Record Drawings (as-builts), specifications, addenda, modifications and shop drawings, including all manufacturers' instructional and parts manuals are delivered to and accepted by the City.

7.5 City may withhold, in whole or in part, payment to such extent as may be necessary to protect itself from loss on account of:

7.5.1 Defective work not remedied.
7.5.2 Claims filed or reasonable evidence indicating probable filing of claims by other parties against Contractor or City because of Contractor's performance.
7.5.3 Failure of Contractor to make payments properly to Subcontractors or for material or labor.
7.5.4 Damage to another contractor not remedied.
7.5.5 Liquidated damages and costs incurred by Consultant for extended construction administration, if applicable.
7.5.6 Failure of Contractor to provide any and all documents required by the Contract Documents.

When the above grounds are removed or resolved satisfactory to the Project Manager, payment shall be made in whole or in part.

7.6 The City shall make payment to the Contractor in accordance with the Florida Prompt Payment Act, Section 218.70, Florida Statutes, provided, however, complete and error free pay application is submitted.

7.7 The City shall make payment to the Contractor through utilization of the City's P-Card Program. The City has implemented a Purchasing Card (P-Card) Program utilizing the MASTERCARD and VISA networks. Purchases from this contract will be made utilizing the City's Purchasing Card. Contractor will receive payment from the purchasing card in the same manner as other credit card purchases. Accordingly, bidders must presently have the ability to accept these credit cards or take whatever steps necessary to implement the ability before the start of the contract term, or contract award by the City. All costs associated with the Contractor's participation in this purchasing program shall be borne by the Contractor. The City reserves the right to revise this program as necessary.

7.8 Payment Card Industry (PCI) Compliance

Contractor agrees to comply with all applicable state, federal and international laws, as well as industry best practices, governing the collection, access, use, disclosure, safeguarding and destruction of Protected Information.

Contractor and/or any subcontractor that handles credit card data must be, and remain, PCI compliant under the current standards and will provide documentation confirming compliance upon request by the City of Fort Lauderdale, failure to produce documentation could result in termination of the contract.

ARTICLE 8 – CONTRACTOR'S REPRESENTATIONS

In order to induce the City to enter into this Agreement, Contractor makes the following representations upon which the City has relied:

8.1 Contractor is qualified in the field of public construction and in particular to perform the Work and services set forth in this Agreement.

8.2 Contractor has visited the Work Site, has conducted extensive tests, examinations and investigations and represents and warrants a thorough familiarization with the nature and extent of the Contract Documents, the Work, locality, soil conditions, water table condition, moisture conditions and all year-round local weather and climate conditions (past and present), and, examination and investigations conducted by Contractor and the Contractor's experts, has determined that no conditions exist that would in any manner affect the Proposed Price and that the project can be completed for the Proposed Price submitted within the Contract Time as defined in this Agreement. Furthermore, Contractor warrants and confirms that it is totally familiar with, understands and obligates Contractor to comply with all federal, state and local laws, ordinances, rules, regulations and all market conditions that affect or may affect the cost and price of materials and labor needed to fulfill all provisions of this Agreement or that in any manner may affect cost, progress or performance of the Work.

8.3 The Contractor has satisfied itself as to the nature and location of the Work under the Contract Documents, the general and local conditions of the Project, particularly those bearing upon availability of transportation, disposal, handling and storage of materials, availability of labor, water, electric power, and roads, the conformation and conditions at the ground based on City provided reports, the type of equipment and facilities needed preliminary to and during the prosecution of the Work and all other matters which can in any way affect the Work or the cost thereof under the Contract Documents.

8.4 The Contractor has also studied on his own, subsurface and latent physical conditions at the site or otherwise affecting cost, progress or performance of the Works, and finds and has further determined that no conditions exist that would in any manner affect the Proposed Price and that the Project can be completed for the Proposed Price submitted.

8.5 Contractor has made or caused to be made examinations, investigations, tests and studies of such reports and related data in addition to those referred to in Paragraphs 8.2, 8.3 and 8.4 above as it deems necessary for the performance of the Work at the Contract Prices, within the Contract Time and in accordance with the other terms and conditions of the Contract Documents; and no additional examinations, investigations, tests, reports or similar data are, or will be, required by Contractor for such purposes.

8.6 Contractor has correlated the results of all such observations, examinations, investigations, tests, reports and data with the terms and conditions of the Contract Documents.

8.7 Contractor has given City written notice of all conflicts, errors or discrepancies that it has discovered in the Contract Documents and the written resolution by City is acceptable to the Contractor.

8.8 Labor

8.8.1 The Contractor shall provide competent, suitable qualified personnel to survey and lay out the Work and perform construction as required by the Contract Documents. The Contractor shall at all times maintain good discipline and order at the site.

8.8.2 The Contractor shall, at all times, have a competent superintendent, capable of reading and thoroughly understanding the drawings and specifications, as the Contractor's agent on the Work, who shall, as the Contractor's agent, supervise, direct and otherwise conduct the Work.

8.8.3 The Contractor shall designate the superintendent on the job to the City, in writing, immediately after receipt of the Notice to Proceed. The Contractor understands and agrees that the superintendent's physical presence on the job site is indispensable to the successful completion of the Work. If the superintendent is frequently absent from the job site, the Project Manager may deliver written notice to the Contractor to stop work or terminate the Contract in accordance with Article 17.

8.8.4 The Contractor shall assign personnel to the job site that have successfully completed training programs related to trench safety, confined space and maintenance of traffic (MOT). A certified "competent person" shall be assigned to the job site. Personnel certified by the International Municipal Signal Associations with Florida Department of Transportation qualifications are required relative to (MOT). Failure to pursue the Work with the properly certified supervisory staff may result in notice to stop work or terminate the Contract in accordance with Article 17.

8.9 Materials:

8.9.1 Where the material and equipment is not supplied by the utility companies (FPL, ATT & Comcast), the Contractor shall furnish all materials, equipment, labor, transportation, construction equipment and machinery, tools, appliances, fuel, power, light, heat, telephone, water and sanitary facilities and all other facilities and incidentals necessary for the execution, testing, initial operation and completion of Work.

8.9.2 All materials and equipment shall be of good quality and new, except as otherwise provided in the Contract Documents. Suppliers shall be selected and paid by the Contractor; the City reserves the right to approve all suppliers and materials.

8.10 Work Hours: Except in connection with the safety or protection of persons, or the Work, or property at the site or adjacent thereto, and except as otherwise indicated in the Supplementary Conditions, all work at the site shall be performed during regular working hours between 8 a.m. and 5:00 p.m., Monday through Friday.

Unless approved by the City in advance, the Contractor will perform work on Saturday, Sunday or any legal holiday (designated by the City of Fort Lauderdale) without the Project Manager's written consent at least seventy-two (72) hours in advance of starting such work. For any overtime inspection required by City personnel, the Contractor shall pay for the additional charges to the City with respect to such overtime work. Such additional charges shall be a subsidiary obligation of the Contractor and no extra payment shall be made to the Contractor for overtime work. **It shall be noted that the City's Inspector work hours are from 8:00 a.m. to 4:30 p.m., Monday through Friday, and any work requiring inspection oversight being performed outside of this timeframe shall be paid for by the Contractor as Inspector overtime at a rate of $174.00 per hour.** The cost to the Contractor to reimburse the City for overtime inspection is established at direct-labor and overtime costs for each person or inspector required. Incidental overtime costs for engineering, testing and other related services will also be charged to the Contractor at the actual rate accrued.

8.11 Patent Fee and Royalties: The Contractor shall pay all license fees and royalties and assume all costs incident to the use in the performance of the Work or the incorporation in the Work, or any invention, design, process, product or device which is the subject of patent rights or copyrights held by others. The Contractor hereby expressly binds himself or itself to indemnify and hold harmless the City from all such claims and fees and from any and all suits and action of every name and description that may be brought against City on account of any such claims, fees, royalties, or costs for any such invention or patent, and from any and all suits or actions that may be brought against said City for the infringement of any and all patents or patent rights claimed by any person, firm corporation or other entity.

8.12 Permits: The Contractor shall obtain and pay for all permits and licenses. There shall be no allowance for Contractor markup, overhead or profit for permits and licenses.

The Contractor shall pay all government charges which are applicable at the time of opening of proposals. It shall be the responsibility of the Contractor to secure and pay for all necessary licenses and permits of a temporary nature necessary for the prosecution of Work.

8.13 Law and Regulations: The Contractor shall give all notices and comply with all laws, ordinances, rules and regulations applicable to the Work. If the Contractor observes that the specifications or plans are at variance therewith, the Contractor shall give the Project Manager prompt written notice thereof, and any necessary changes shall be adjusted by any appropriate modifications. If the Contractor performs any work knowing or having reason to know that it is contrary to such laws, ordinances, rules, standards, specifications and regulations, and without such notice to the Project Manager, the Contractor shall bear all costs arising therefrom.

8.14 Taxes: The Contractor shall pay all sales, consumer, use and other similar taxes required to be paid by him in accordance with the laws of the City of Fort Lauderdale, County of Broward, State of Florida.

8.15 Contractor Use of Premises: The Contractor shall confine construction equipment, the storage of materials and equipment and the operations of workmen to areas permitted by law, ordinances, permits and/or the requirements of the Contract Documents, and shall not unreasonably encumber the premises with construction equipment or other materials or equipment.

The Contractor shall not enter upon private property for any purpose without first securing the permission of the property owner in writing and furnishing the Project Manager with a copy of said permission. This requirement will be strictly enforced, particularly with regard to such vacant properties as may be utilized for storage or staging by the Contractor.

The Contractor shall conduct his work in such a manner as to avoid damage to adjacent private or public property. Any damage to existing structures of work of any kind, including permanent reference markers or property corner markers, or the interruption of a utility service, shall be repaired or restored promptly at no expense to the City or property owner.

The Contractor will preserve and protect all existing vegetation such as trees, shrubs and grass on or adjacent to the site which do not reasonably interfere with the construction, as determined by the Project Manager. The Contractor will be responsible for repairing or replacing any trees, shrubs, lawns and landscaping that may be damaged due to careless operation of equipment, stockpiling of materials, tracking of grass by equipment or other construction activity. The Contractor will be liable for, or will be required to replace or restore at no expense to the City all properties and areas not protected or preserved as required herein that may be destroyed or damaged.

During the progress of the work, the Contractor shall keep the premises free from accumulation of waste materials, rubbish and debris resulting from the Work. At the completion of the Work, the Contractor shall remove all waste materials, rubbish and debris from and about the premises as well as all tools, appliances, construction equipment and machinery, and surplus materials and shall leave the site clean and ready for occupancy by the City. The Contractor shall restore to their original condition those portions of the site not designated for alteration by the Contract Documents at no cost to the City.

8.16 Project Coordination: The Contractor shall provide for the complete coordination of the construction effort. This shall include, but not necessarily be limited to, coordination of the following:

8.16.1 Flow of material and equipment from suppliers.
8.16.2 The interrelated work with affected utility companies.
8.16.3 The interrelated work with the City where tie-ins to existing facilities are required.
8.16.4 The effort of independent testing agencies.
8.16.5 Notice to affected property owners as may be directed by the Project Manager.

8.17 Project Record Documents and Final As-Builts (Record Drawings): Contractor shall be responsible for maintaining up-to-date redline as-built drawings, on site, at all times during construction. All as-built information shall be surveyed and verified by a professional land surveyor registered in the State of Florida. Contractor shall provide the City with a minimum of three (3) sets of signed and sealed record drawings (Final As-Builts) and a CD of the electronic drawings files created in AutoCad 2014 or later. All costs associated with survey work required for construction layout and as-built preparation shall be the responsibility of the Contractor.

8.18 Safety and Protection:

8.18.1 The Contractor shall be responsible for initiating, maintaining and supervising all safety precautions and programs in connection with the Work. The Contractor shall take all necessary precautions for the safety of, and shall provide the necessary protection to prevent damage, injury or loss to:

8.18.1.1 All employees working on the project and other persons who may be affected thereby.

8.18.1.2 All the Work and all materials or equipment to be incorporated therein, whether in storage on or off the site.

8.18.1.3 Other property at the site or adjacent thereto, including trees, shrubs, lawns, walks, pavements, roadways, structures and utilities not designated for removal, relocation or replacement in the course of construction.

8.18.2 The Contractor shall comply with all applicable laws, ordinances, rules, regulations and orders of any public body having jurisdiction for the safety of persons or property or to protect them from damage, injury or loss; and shall erect and maintain all necessary safeguards for such safety and protection. The Contractor shall notify owners of adjacent property and utilities when execution of the Work may affect them at least seventy-two (72) hours in advance (unless otherwise required). All damage, injury or loss to any property caused, directly or indirectly, in whole or in part by the Contractor, any subcontractor or anyone directly or indirectly employed by any of them or anyone for whose acts any of them may be liable, shall be remedied by the Contractor. The Contractor's duties and responsibilities for safety and protection of the Work shall continue until such time as all the Work is completed and accepted by the City.

8.19 Emergencies: In emergencies affecting the safety or protection of persons or the Work or property at the site or adjacent thereto, the Contractor, without special instruction or authorization from the City is obligated to act to prevent threatened damage, injury or loss. The Contractor shall give the Project Manager prompt written notice of any significant changes in the Work or deviations from the Contract Documents caused thereby.

8.20 Risk of Loss: The risk of loss, injury or destruction shall be on the Contractor until acceptance of the Work by the City. Title to the Work shall pass to the City upon acceptance of the Work by the City.

8.21 Environmental: The Contractor has fully inspected the Premises and agrees, except as to the presence of any asbestos, to accept the Premises in an "as is" physical condition, without representation or warranty by the City of any kind, including, without limitation, any and all existing environmental claims or obligations that may arise from the presence of any "contamination" on, in or about the Premises. Further, Contractor and all entitles claiming by, through or under the Contractor, releases and discharges the City, from any claim, demand, or cause of action arising out of or relating to the Contractor's use, handling, storage, release, discharge, treatment, removal, transport, decontamination, cleanup, disposal and/or presence of any hazardous substances including asbestos on, under, from or about the Premises. The Contractor shall have no liability for any pre-existing claims or "contamination" on the Premises.

The Contractor shall not use, handle, store, discharge, treat, remove, transport, or dispose of Hazardous Substances including asbestos at, in, upon, under, to or from the Premises until receipt of instructions from the City. At such time, a City approved Change Order, which shall not include any profit, shall authorize the Contractor to perform such services.

The Contractor shall immediately deliver to the Project Manager complete copies of all notices, demands, or other communications received by the Contractor from any governmental or quasi-governmental authority or any insurance company or board of fire underwriters or like or similar entities regarding in any way alleged violations or potential violations of any Environmental Law or otherwise asserting the existence or potential existence of any condition or activity on the Premises which is or could be dangerous to life, limb, property, or the environment.

For other and additional consideration, the Contractor hereby agrees, at its sole cost and expense, to indemnify and protect, defend, and hold harmless the City and its respective employees, agents, officials, officers, representatives, contractors and subcontractors, successors, and assigns (hereafter the "City") from and against any and all claims, demands, losses, damages, costs, expenses, including but not limited to mitigation, restoration, and natural restoration expenses, liabilities, assessments, fines, penalties charges, administrative and judicial proceedings and orders, judgments, causes of action, in law or in equity, remedial action requirements and/or enforcement actions of any kind (including, without limitation, attorneys' fees and costs) directly or indirectly arising out of or attributable to, in whole or in part, the Contractor's use, handling, storage, release, threatened release, discharge, treatment, removal, transport, decontamination, cleanup, disposal and/or presence of a Hazardous Substance (excluding asbestos) on, under, from, to or about the Premises or any other activity carried on or undertaken on or off the Premises by the Contractor or its employees, agents or subcontractors, in connection with the use, handling, storage, release, threatened release, discharge, treatment, mitigation, natural resource restoration, removal, transport, decontamination, cleanup, disposal and/or presence or any Hazardous Substance including asbestos located, transported, or present on, undue, from, to, or about the Premises. This indemnity is intended to be operable under 42 U.S.C. sections 9607, as amended, and any successor section.

The scope of the indemnity obligations includes, but is not limited to: (a) all consequential damages; (b) the cost of any required or necessary repair, cleanup, or detoxification of the applicable real estate and the preparation and implementation of any closure, remedial or other required plan, including without limitation; (i) the costs of

removal or remedial action incurred by the United States government or the State of Florida or response costs incurred by any other person, or damages from injury to destruction of, or loss of, natural resources, including the cost of assessing such injury, destruction, or loss, incurred pursuant to the Comprehensive Environmental Response, Compensation and Liability Act, as amended; (ii) the clean-up costs, fines, damages, or penalties incurred pursuant to any applicable provisions of Florida law; and (iii) the cost and expenses of abatement, correction or cleanup, fines, damages, response costs, or penalties which arise from the provisions of any other statute, law, regulation, code ordinance, or legal requirement state or federal; and (c) liability for personal injury or property damage arising under any statutory or common law tort theory, including damages assessed for the maintenance of a public private nuisance, response costs, or for the carrying on of an abnormally dangerous activity.

8.22 No Extended Damages: For other and additional good and valuable consideration the receipt and sufficiency of which is hereby acknowledged, the Contractor covenants and agrees that in the event of any delay of construction or for any other reason or allegation or claim, and notwithstanding the reason of the delay, reason, claim or allegation or who caused them or the construction delay or whether they were caused by the City, that there will be no entitlement to Contractor to or for any direct or indirect financial damages or losses for extended corporate overhead impact, extended project overhead impacts, project support services, mobilization or demobilization or by whatever other label or legal concept or theory and types of names or labels or basis such claims may have, or any business damages or losses of whatever type or nature, and Contractor hereby waives any right to make any such claim or claims. This provision will have application and effect when construction delays are anticipated and agreed upon by both the City and the Contractor.

8.23 No Liens: If any Subcontractor, supplier, laborer, or materialmen of Contractor or any other person directly or indirectly acting for or through Contractor files or attempts to file a mechanic's or construction lien against the real property on which the work is performed or any part or against any personal property or improvements or claim against any monies due or to become due from the City to Contractor or from Contractor to a Subcontractor, for or on account of any work, labor, services, material, equipment, or other items furnished in connection with the Work or any Change Order, Contractor agrees to satisfy, remove, or discharge such lien or claim at its own expense by bond, payment, or otherwise within twenty (20) days of the filing or from receipt of written notice from the City.

Additionally, until such time as such lien or claim is satisfied, removed or discharged by Contractor, all monies due to Contractor, or that become due to Contractor before the lien or claim is satisfied, removed or otherwise discharged, shall be held by City as security for the satisfaction, removal and discharge of such lien and any expense that may be incurred while obtaining such. If Contractor shall fail to do so, City shall have the right, in addition to all other rights and remedies provided by this Agreement or by law, to satisfy, remove, or discharge such lien or claim by whatever means City chooses at the entire and sole cost and expense of Contractor which costs and expenses shall, without limitation, include attorney's fees, litigation costs, fees and expenses and all court costs and assessments.

8.24 Weather Emergencies: Upon issuance of a Hurricane Watch by the National Weather Service, the Contractor shall submit to the City a plan to secure the work area in the event a Hurricane Warning is issued. The plan shall detail how the Contractor will secure the Premises, equipment and materials in a manner as to prevent damage to the Work and prevent materials and equipment from becoming a hazard to persons and property on and around the Premises. The plan shall include a time schedule required to accomplish the hurricane preparations and a list of emergency contacts that will be available and in the City before, during and immediately after the storm.

Upon issuance of a Hurricane Warning by the National Weather Service, if the Contractor has not already done so, the Contractor shall implement its hurricane preparedness plan. Cost of development and implementation of the hurricane preparedness plan shall be considered as incidental to construction. Cost of any clean up and rework required after the storm will be considered normal construction risk within Florida and shall not entitle the Contractor to any additional compensation. Contractor shall be entitled to request an extension in time for completion of the Work, in accordance with the provisions of Article 15 of this Agreement, equal to the time it is shut down for implementation of the preparedness plan, the duration of the storm and a reasonable period to restore the Premises.

8.25 Force Majeure: No Party shall hold the other responsible for damages or for delays in performance caused by force majeure, acts of God, or other acts or circumstances beyond the control of the other party or that could not have been reasonably foreseen and prevented. For this purpose, such acts or circumstances shall include, but not be limited to weather conditions affecting performance, floods, epidemics, war, riots, strikes, lockouts, or other industrial disturbances, or protest demonstrations. Should such acts or circumstances occur, the parties shall use their best efforts to overcome the difficulties arising therefrom and to resume the Work as soon as reasonably possible with the normal pursuit of the Work.

Inclement weather, continuous rain for less than three (3) days or the acts or omissions of subcontractors, third-party contractors, materialmen, suppliers, or their subcontractors, shall not be considered acts of force majeure.

No Party shall be liable for its failure to carry out its obligations under the Agreement during a period when such Party is rendered unable by force majeure to carry out its obligation, but the obligation of the Party or Parties relying on such force majeure shall be suspended only during the continuance of the inability and for no longer period than the unexpected or uncontrollable event.

The Contractor further agrees and stipulates, that its right to excuse its failure to perform by reason of force majeure shall be conditioned upon giving written notice of its assertion that a Force Majeure delay has commenced within 96 hours after such an occurrence. The Contractor shall use its reasonable efforts to minimize such delays. The Contractor shall promptly provide an estimate of the anticipated additional time required to complete the Project.

8.26 Participation by Disadvantaged Business Enterprises in Department of Transportation Financial Assisted Contracts: The recipient shall not discriminate on the basis of race, color, national origin, or sex in the award and performance of any DOT-assisted contract or in the administration of its DBE program or the requirements of 49 CFR part 26. The recipient shall take all necessary and reasonable steps under 49 CFR part 26 to ensure nondiscrimination in the award and administration of DOT-assisted contracts. The recipient's DBE program, as required by 49 CFR part 26 and as approved by DOT, is incorporated by reference in this agreement. Implementation of this program is a legal obligation and failure to carry out its terms shall be treated as a violation of this agreement. Upon notification to the recipient of its failure to carry out its approved program, the Department may impose sanctions as provided for under part 26 and may, in appropriate cases, refer the matter for enforcement under 18 U.S.C. 1001 and/or the Program Fraud Civil Remedies Act of 1986 (31 U.S.C. 3801 *et seq.*).

Additionally, the Contractor assures that it, the sub recipient or the subcontractor shall not discriminate on the basis of race, color, national origin, or sex in the performance of this contract. The Contractor shall carry out applicable requirements of 49 CFR part 26 in the award and administration of DOT-assisted contracts. Failure by the Contractor to carry out these requirements is a material breach of this contract, which may result in the termination of this Agreement or such other remedy as the recipient deems appropriate. This additional language must be included in each subcontract the prime contractor signs with a subcontractor.

ARTICLE 9 – CITY'S RESPONSIBILITIES

9.1 The City shall furnish the data required of the City under the Contract Documents promptly and shall make payments to the Contractor promptly after they are due as provided in Article 7.

9.2 The City shall provide public rights-of-way and easement, where available, for the installation of conduits, transformers pads and related appurtenances only.

9.3 Technical Clarifications and Interpretations:

9.3.1 The City shall issue, with reasonable promptness, such written clarifications or interpretations of the Contract Documents as it may determine necessary, which shall be consistent with or reasonably inferable from the overall intent of the Contract Documents. Should the Contractor fail to request interpretation of questionable items in the Contract Documents, the City shall not entertain any excuse for failure to execute the Work in a satisfactory manner.

9.3.2 The City shall interpret and decide matters concerning performance under the requirements of the Contract Documents, and shall make decisions on all claims, disputes or other matters in question. Written notice of each claim, dispute or other matter will be delivered by claimant to the other Party but in no event later than five (5) days after the occurrence of event, and written supporting date will be submitted to the other Party within five (5) days after such occurrence. All written decisions of the City on any claim or dispute will be final and binding.

9.4 The Contractor shall perform all Work to the reasonable satisfaction of the City in accordance with the Contract Documents. In cases of disagreement or ambiguity, the City shall decide all questions, difficulties, and disputes of whatever nature, which may arise under or by reason of this Agreement or the quality, amount and value of the Work, and the City's decisions on all claims, questions and determination are final.

9.5 Cancellation For Unappropriated Funds: The obligation of the City for payment to a Contractor is limited to the availability of funds appropriated in a current fiscal period, and continuation of the contract into a subsequent fiscal period is subject to appropriation of funds, unless otherwise authorized by law.

ARTICLE 10 – BONDS AND INSURANCE

10.1 Public Construction and Other Bonds: The Contractor shall furnish Public Construction or Performance and Payment Bonds ("Bond"), each in an amount at least equal to the Contract Price as security for the faithful performance and payment of all the Contractor's obligations under the Contract Documents. These Bonds shall remain in effect until at least one (1) year after the date of final payment, except as otherwise provided by law. All Bonds shall be furnished and provided by the surety and shall be in substantially the same form as prescribed by the Contract Documents and be executed by such sureties as (i) are licensed to conduct business in the State of Florida, and (ii) are named in the current list of Companies Holding Certificates of Authority as Acceptable Sureties on Federal Bonds and as Acceptable Reinsuring Companies as published in Circular 570 (amended) by the Audit Staff Bureau of Accounts, U.S. Treasury Department and (iii) otherwise meet the requirements set forth herein that apply to sureties. All Bonds signed by an agent must be accompanied by a certified copy of the authority to act.

10.1.1 Performance Bond: The Contractor shall execute and record in the public records of Broward County, Florida, a payment and performance bond in an amount at least equal to the Contract Price with a surety insurer authorized to do business in the State of Florida as surety, ("Bond"), in accordance with Section 255.05, Florida Statutes (2019), as may be amended or revised, as security for the faithful performance and payment of all of the Contractor's obligations under the Contract Documents.

A Corporate Surety Bond legally issued, meeting the approval of, and running to the City in an amount not less than the Contract Price of such improvements, conditioned that the Contractor shall maintain and make all repairs to the improvements constructed by the Contractor at their own expense and free of charge to the City, for the period of one (1) year after the date of acceptance of the Work within such period by reason of any imperfection of the material used or by reason of any defective workmanship, or any improper, imperfect or defective preparation of the base upon which any such improvement shall be laid.

10.2 Disqualification of Surety: If the Surety on any Bond furnished by the Contractor is declared bankrupt or becomes insolvent or its right to do business is terminated in the State of Florida or it ceases to meet the requirements of clauses (i) and (ii) of Paragraph 10.1, the Contractor shall within five (5) days thereafter substitute another Bond and Surety, both of which shall be acceptable to the City.

10.3 Insurance

As a condition precedent to the effectiveness of this Agreement, during the term of this Agreement and during any renewal or extension term of this Agreement, the Contractor, at its sole expense, shall provide insurance of such types and with such terms and limits as noted below. Providing proof of and maintaining adequate insurance coverage are material obligations of the Contractor. The Contractor shall provide the City a certificate of insurance evidencing such coverage. The Contractor's insurance coverage shall be primary insurance for all applicable policies. The limits of coverage under each policy maintained by the Contractor shall not be interpreted as limiting the Contractor's liability and obligations under this Agreement. All insurance policies shall be through insurers authorized or eligible to write policies in the State of Florida and possess an A.M. Best rating of A-, VII or better, subject to approval by the City's Risk Manager.

The coverages, limits, and/or endorsements required herein protect the interests of the City, and these coverages, limits, and/or endorsements shall in no way be required to be relied upon by the Contractor for assessing the extent or determining appropriate types and limits of coverage to protect the Contractor against any loss exposures, whether as a result of this Agreement or otherwise. The requirements contained herein, as well as the City's review or acknowledgement, are not intended to and shall not in any manner limit or qualify the liabilities and obligations assumed by the Contractor under this Agreement.

The following insurance policies and coverages are required:

Commercial General Liability
Coverage must be afforded under a Commercial General Liability policy with limits not less than:

- $1,000,000 each occurrence and $2,000,000 aggregate for Bodily Injury, Property Damage, and Personal and Advertising Injury
- $1,000,000 each occurrence and $2,000,000 aggregate for Products and Completed Operations

Policy must include coverage for contractual liability and independent contractors.

The City, a Florida municipal corporation, its officials, employees, and volunteers are to be covered as an additional insured with a CG 20 26 04 13 Additional Insured – Designated Person or Organization Endorsement or similar endorsement providing equal or broader Additional Insured Coverage with respect to liability arising out of activities performed by or on behalf of the Contractor. The coverage shall contain no special limitation on the scope of protection afforded to the City, its officials, employees, and volunteers.

Business Automobile Liability
Coverage must be afforded for all Owned, Hired, Scheduled, and Non-Owned vehicles for Bodily Injury and Property Damage in an amount not less than $1,000,000 combined single limit each accident.

If the Contractor does not own vehicles, the Contractor shall maintain coverage for Hired and Non-Owned Auto Liability, which may be satisfied by way of endorsement to the Commercial General Liability policy or separate Business Auto Liability policy.

Crane and Rigging Liability
Coverage must be afforded for any crane operations under the Commercial General or Business Automobile Liability policy as necessary, in line with the limits of the associated policy.

Workers' Compensation and Employer's Liability
Coverage must be afforded per Chapter 440, Florida Statutes. Any person or entity performing work for or on behalf of the City must provide Workers' Compensation insurance. Exceptions and exemptions will be allowed by the City's Risk Manager, if they are in accordance with Florida Statute.

The Contractor waives, and the Contractor shall ensure that the Contractor's insurance carrier waives, all subrogation rights against the City, its officials, employees, and volunteers for all losses or damages. The City requires the policy to be endorsed with WC 00 03 13 Waiver of our Right to Recover from Others or equivalent.

The Contractor must be in compliance with all applicable State and federal workers' compensation laws, including the U.S. Longshore Harbor Workers' Act and the Jones Act, if applicable.

Insurance Certificate Requirements

a. The Contractor shall provide the City with valid Certificates of Insurance (binders are unacceptable) no later than thirty (30) days prior to the start of work contemplated in this Agreement.
b. The Contractor shall provide to the City a Certificate of Insurance having a thirty (30) day notice of cancellation; ten (10) days' notice if cancellation is for nonpayment of premium.
c. In the event that the insurer is unable to accommodate the cancellation notice requirement, it shall be the responsibility of the Contractor to provide the proper notice. Such notification will be in writing by registered mail, return receipt requested, and addressed to the certificate holder.
d. In the event the Agreement term goes beyond the expiration date of the insurance policy, the Contractor shall provide the City with an updated Certificate of Insurance no later than ten (10) days prior to the expiration of the insurance currently in effect. The City reserves the right to suspend the Agreement until this requirement is met.
e. The Certificate of Insurance shall indicate whether coverage is provided under a claims-made or occurrence form. If any coverage is provided on a claims-made form, the Certificate of Insurance must show a retroactive date, which shall be the effective date of the initial contract or prior.

f. The City shall be named as an Additional Insured on all liability policies, with the exception of Workers' Compensation.
g. The City shall be granted a Waiver of Subrogation on the Contractor's Workers' Compensation insurance policy.
h. The title of the Agreement, Bid/Contract number, event dates, or other identifying reference must be listed on the Certificate of Insurance.

The Certificate Holder should read as follows:
City of Fort Lauderdale
100 N. Andrews Avenue
Fort Lauderdale, FL 33301

The Contractor has the sole responsibility for all insurance premiums and shall be fully and solely responsible for any costs or expenses as a result of a coverage deductible, co-insurance penalty, or self-insured retention; including any loss not covered because of the operation of such deductible, co-insurance penalty, self-insured retention, or coverage exclusion or limitation. Any costs for adding the City as an Additional Insured shall be at the Contractor's expense.

If the Contractor's primary insurance policy/policies do not meet the minimum requirements, as set forth in this Agreement, the Contractor may provide evidence of an Umbrella/Excess insurance policy to comply with this requirement.

The Contractor's insurance coverage shall be primary insurance as respects to the City, a Florida municipal corporation, its officials, employees, and volunteers. Any insurance or self-insurance maintained by the City, a Florida municipal corporation, its officials, employees, or volunteers shall be non-contributory.

Any exclusion or provision in any insurance policy maintained by the Contractor that excludes coverage required in this Agreement shall be deemed unacceptable and shall be considered breach of contract.

All required insurance policies must be maintained until the contract work has been accepted by the City, or until this Agreement is terminated, whichever is later. Any lapse in coverage shall be considered breach of contract. In addition, Contractor must provide to the City confirmation of coverage renewal via an updated certificate should any policies expire prior to the expiration of this Agreement. The City reserves the right to review, at any time, coverage forms and limits of Contractor's insurance policies.

The Contractor shall provide notice of any and all claims, accidents, and any other occurrences associated with this Agreement to the Contractor's insurance company or companies and the City's Risk Management office, as soon as practical.

It is the Contractor's responsibility to ensure that any and all of the Contractor's independent contractors and subcontractors comply with these insurance requirements. All coverages for independent contractors and subcontractors shall be subject to all of the applicable requirements stated herein. Any and all deficiencies are the responsibility of the Contractor.

NOTE: CITY PROJECT NUMBER, NAME AND BID NUMBER MUST APPEAR ON EACH CERTIFICATE, AND THE CITY OF FORT LAUDERDALE MUST BE NAMED ON THE CERTIFICATE AS AN "ADDITIONAL INSURED" ON GENERAL LIABILITY POLICIES.

A Sample Insurance Certificate shall be included with the proposal to demonstrate the firm's ability to comply with insurance requirements. Provide a previous certificate or other evidence listing the insurance companies' names for all required coverage, and the dollar amounts of the coverage.

ARTICLE 11- WARRANTY AND GUARANTEE, TESTS AND INSPECTIONS, CORRECTION, REMOVAL OR ACCEPTANCE OF DEFECTIVE WORK

11.1 Warranty: The Contractor warrants and guarantees to the City that all Work will be in accordance with the Contract Documents and will not be defective. Prompt notice of all defects shall be given to the Contractor. All defective work, whether or not in place, may be rejected, corrected or accepted as provided in this Article.

11.1.1 Warranty of Title: The Contractor warrants to the City that it possesses good, clear and marketable title to all equipment and materials provided and that there are no pending liens, claims or encumbrances against the equipment and materials.

11.1.2 Warranty of Specifications: The Contractor warrants that all equipment, materials and workmanship furnished, whether furnished by the Contractor, its subcontractors or suppliers, will comply with the specifications, drawings and other descriptions supplied or adopted and that all services will be performed in a workmanlike manner.

11.1.3 Warranty of Merchantability: The Contractor warrants that any and all equipment to be supplied pursuant to this Agreement is merchantable, free from defects, whether patent or latent in material or workmanship, and fit for the ordinary purposes for which it is intended.

11.2 Tests and Inspections: Contractor shall retain the services of an independent, certified, testing lab to perform all testing as required by the specifications, Contract drawings, and any applicable permitting agency. Contractor shall provide evidence of certification to the City before the work and testing is done. Testing results shall be submitted to the Project Manager for review and approval at the time the results are provided to the Contractor. The Contractor shall give the Project Manager and City Inspector a minimum of twenty-four (24) hours' advanced notice of readiness of the Work for all required inspections, tests, or approvals and shall notify all applicable permitting agencies in a timely manner based on requirements set forth in the permit documents.

11.2.1 Neither observations by the Project Manager nor inspections, tests or approvals by others shall relieve the Contractor from its obligations to perform the Work in accordance with the Contract Documents.

11.3 Uncovering Work: If any work that is to be inspected, tested or approved is covered without approval or consent of the Project Manager, it must, if requested by the Project Manager, be uncovered for observation and/or testing. Such uncovering and replacement shall be at the Contractor's sole expense unless the Contractor has given the Project Manager timely notice of the Contractor's intention to cover such Work and the Project Manager has not acted with reasonable promptness in response to such notice.

11.3.1 If the Project Manager considers it necessary or advisable that Work covered in accordance with Paragraphs 11.2.1, 11.2.2 and 11.2.3 be observed by the City or inspected or tested by others, the Contractor at the City's request, shall uncover, expose or otherwise make available for observation, inspection or testing as the Project Manager may require, that portion of the Work in question, furnishing all necessary labor, material and equipment. If it is found that such Work is defective, the Contractor shall bear all the expenses of such uncovering, exposure, observation, inspection and testing and of satisfactory reconstruction, including compensation for additional professional services, and an appropriate deductive Change Order shall be issued. If, however, such work is not found to be defective, the Contractor shall be allowed an increase in the Contract Price or an extension of the Contract Time, or both, directly attributable to such uncovering, exposure, observation, inspection testing and reconstruction if it makes a claim therefore as provided in Articles 14 and 15.

11.4 City May Stop the Work: If the Work is defective, or the Contractor fails to supply sufficient skilled supervisory personnel or workmen or suitable materials or equipment or the work area is deemed unsafe, the City may order the Contractor to stop the Work, or any portion thereof, until the cause for such order has been eliminated; however, this right of the City to stop the Work shall not give rise to any duty on the part of the City to exercise this right for the benefit of the Contractor or any other party. The City will not award any increase in Contract Price or Contract Time if the Work is stopped due to the circumstances described herein.

11.5 Correction or Removal of Defective Work Before Final Payment: If required by the Project Manager, the Contractor shall promptly, without cost to the City and as specified by the Project Manager, either correct any defective Work, whether or not fabricated, installed or completed, or if the Work has been rejected by the City remove it from the site and replace it with non-defective Work.

11.6 One Year Correction Period After Final Payment: If within one (1) year after the date of final acceptance, or such longer period of time as may be prescribed by law or by the terms of any applicable special guarantee required by the Contract Documents, any work is found to be defective, the Contractor shall promptly, without cost to the City and in accordance with the City's written instructions, either correct such defective Work, or, if it has been rejected by the City, remove it from the site and replace it with non-defective Work.

If The Contractor does not promptly comply with the terms of such instructions or in an emergency where delay would cause serious risk of loss or damage, the City may have the defective Work corrected or the rejected Work removed and replaced, and all

direct and indirect costs for such removal and replacement, including compensation for additional professional services, shall be paid by the Contractor.

11.7 Acceptance of Defective Work, Deductions: If, instead of requiring correction or removal and replacement of defective Work, the City, at the City's sole option, prefers to accept it, the City may do so. In such a case, if acceptance occurs prior to the Project Manager's recommendation of final payments, a Change Order shall be issued incorporating the necessary revisions in the Contract's Documents, including appropriate reduction in the Contract Price; or if the acceptance occurs after such recommendation, an appropriate amount shall be paid by the Contractor to the City.

11.8 City May Correct Defective Work: If the Contractor fails within a reasonable time after written notice of the Project Manager to proceed to correct defective Work or to remove and replace rejected Work as required by the Project Manager in accordance with Paragraph 11.5, or if the Contractor fails to perform the Work in accordance with the Contract Documents, the City may, after seven (7) days written notice to the Contractor, correct and remedy any such deficiency. In exercising its rights under this paragraph, the City shall proceed expeditiously. To the extent necessary to complete corrective and remedial action, the City may exclude the Contractor from all or part of the site, take possession of all or part of the Work, suspend the Contractor's services related thereto and take possession of the Contractor's tools, construction equipment and materials stored at the site or elsewhere. The Contractor shall allow the City's representative agents and employees such access to the site as may be necessary to enable the City to exercise its rights under this paragraph. All direct and indirect costs of the City in exercising such rights shall be charged against the Contractor in an amount verified by the Project Manager, and a Change Order shall be issued incorporating the necessary revisions in the Contract Documents and a reduction in the Contract Price. Such direct and indirect costs shall include, in particular but without limitation, compensation for additional professional services required and costs of repair and replacement of work of others destroyed or damaged by correction, removal or replacement of the Contractor's defective Work. The Contractor shall not be allowed an extension of the Contract Time because of any delay in performance of the Work attributable to the exercise by the City of the City's right hereunder.

ARTICLE 12 – INDEMNIFICATION

12.1 Disclaimer of Liability: The City shall not at any time, be liable for injury or damage occurring to any person or property from any cause, whatsoever, arising out of Contractor's construction and fulfillment of this Agreement.

12.2 Indemnification: For other, additional good valuable consideration, the receipt and sufficiency of which is hereby acknowledged:

12.2.1 Contractor shall, at its sole cost and expense, indemnify and hold harmless the City, its representatives, employees and elected and appointed officials from or on account of all claims, damages, losses, liabilities and expenses, direct, indirect or consequential including but not limited to fees and charges of engineers, architects, attorneys, consultants and other professionals and court costs arising out of or in consequence of the performance of this Agreement at

all trial and appellate levels. Indemnification shall specifically include but not be limited to claims, damages, losses, liabilities and expenses arising out of or from (a) the negligent or defective design of the project and Work of this Agreement; (b) any act, omission or default of the Contractor, its subcontractors, agents, servants or employees; (c) any and all bodily injuries, sickness, disease or death; (d) injury to or destruction of tangible property, including any resulting loss of use; (e) other such damages, liabilities, or losses received or sustained by any person or persons during or on account of any operations connected with the construction of this Project including the warranty period; (f) the use of any improper materials; (g) any construction defect including both patent and latent defects; (h) failure to timely complete the work; (i) the violation of any federal, state, county or City laws, ordinances or regulations by Contractor, its subcontractors, agents, servants, independent contractors or employees; (j) the breach or alleged breach by Contractor of any term of the Agreement, including the breach or alleged breach of any warranty or guarantee.

12.2.2 Contractor agrees to indemnify, defend, and hold harmless the City, its officers, agents and employees, from all damages, liabilities, losses, claims, fines and fees, and from any and all suits and actions of every name and description that may be brought against City, its officers, agents and employees, on account of any claims, fees, royalties, or costs for any invention or patent and/or for the infringement of any and all copyrights or patent rights claimed by any person, firm, or corporation.

12.2.3 Contractor shall pay all claims, losses, liens, settlements or judgments of any nature in connection with the foregoing indemnifications including, but not limited to, reasonable attorney's fees and costs for trials and appeals.

12.2.4 If any Subcontractor, supplier, laborer, or materialmen of Contractor or any other person directly or indirectly acting for or through Contractor files or attempts to file a mechanic's or construction lien against the real property on which the work is performed or any part or against any personal property or improvements thereon or make a claim against any monies due or to become due from the City to Contractor or from Contractor to a Subcontractor, for or on account of any work, labor, services, material, equipment, or other items furnished in connection with the Work or any change order, Contractor agrees to satisfy, remove, or discharge such lien or claim at its own expense by bond, payment, or otherwise within five (5) days of the filing or from receipt of written notice from the City.

Additionally, until such time as such lien or claim is satisfied, removed or discharged by Contractor, all monies due to Contractor, or that become due to Contractor before the lien or claim is satisfied, removed or otherwise discharged, shall be held by City as security for the satisfaction, removal and discharge of such lien and any expense that may be incurred while obtaining the discharge. If Contractor shall fail to do so, City shall have the right, in addition to all other rights and remedies provided by this Agreement or by law, to satisfy, remove, or discharge such lien or claim by whatever means City chooses at the entire and sole cost and expense of Contractor which costs and

expenses shall, without limitation, include attorney's fees, litigation costs, fees and expenses and all court costs and assessments, and which shall be deducted from any amount owing to Contractor. In the event the amount due Contractor is less than the amount required to satisfy Contractor's obligation under this, or any other article, paragraph or section of this Agreement, the Contractor shall be liable for the deficiency due the City.

12.2.5 The Contractor and the City agree that Section 725.06(2), Florida Statutes controls the extent and limits of the indemnification and hold harmless provisions of this Agreement, if any, and that the Parties waive any defects in the wording of this Article that runs afoul of said statutory section.

ARTICLE 13 – CHANGES IN THE WORK

13.1 Without invalidating this Agreement, the City may, at any time or from time to time order additions, deletions or revisions in the Work through the issuance of Change Orders. Upon receipt of a Change Order, the Contractor shall proceed with the Work involved. All Work shall be executed under the applicable conditions of the Contract Documents. If any Change Order causes an increase or decrease in the Contract Price or an extension or shortening of the Contract Time, an equitable adjustment will be made as provided in Article 14 or Article 15 on the basis of a claim made by either Party.

13.2 The Project Manager may authorize minor changes in the Work not involving an adjustment in the Contract Price or the Contract Time, which are consistent with the overall intent of the Contract Documents. Such changes must be in writing and signed by the City and the Contractor.

13.3 If notice of any change affecting the general scope of the Work or change in the Contract Price is required by the provisions of any Bond to be given to the Surety, it will be the Contractor's responsibility to so notify the Surety, and the amount of each applicable Bond shall be adjusted accordingly. The Contractor shall furnish proof of such adjustment to the City.

ARTICLE 14 – CHANGE OF CONTRACT PRICE

Change of Contract Price, approved by City, shall be computed as follows:

14.1 Cost of the Work: The term "Cost of the Work" means the sum of all direct costs necessarily incurred and paid by Contractor in the proper performance of the Work. Except as otherwise may be agreed to in writing by the City, these costs shall be in amounts no higher than those prevailing in the City and shall include only the following items and shall not include any of the costs itemized in Paragraph 14.3:

14.1.1 Payroll costs for employees in the direct employ of the Contractor in the performance of the Work under schedules of job classifications agreed upon by the City and the Contractor. Payroll costs for employees not employed full time on the Work shall be apportioned on the basis of their time spent on the Work.

Payroll costs shall include, but not be limited to, salaries and wages plus and cost of fringe benefits which shall include social security contributions, unemployment, excise and payroll taxes, worker's compensation, health and retirement benefits, bonuses, sick leave, vacation and applicable holiday pay.

14.1.2 Cost of all materials and equipment furnished and incorporated in the Work, including costs of transportation and storage, and required suppliers and field services. All cash discounts, rebates and refunds and all returns from sale of surplus materials and equipment shall accrue to the City, and the Contractor shall make provisions so that they may be obtained.

14.1.3 Supplemental costs including the following:

14.1.3.1 Cost, including transportation and maintenance of all materials, supplies, equipment, machinery, appliances, office and temporary facilities at the site and hand tools not owned by the workers, which are consumed in the performance of the Work.

14.1.3.2 Rentals of all construction equipment and machinery and the parts whether rented from the Contractor or others in accordance with rental agreements approved by the City, and the costs of transporting, loading, unloading, installation, dismantling and removal. The rental of any such equipment, machinery or parts shall cease when the use is no longer necessary for the Work.

14.1.3.3 Sales, consumer, use or similar taxes related to the Work and for which the Contractor is liable, imposed by laws and regulations.

14.1.3.4 Royalty payments and fees for permits and licenses.

14.1.3.5 The cost of utilities, fuel and sanitary facilities at the Work site.

14.1.3.6 Minor expenses such as telegrams, long distance telephone calls, telephone service at the site, expressage and similar petty cash items in connection with the Work.

14.1.3.7 Cost of premiums for additional bonds and insurance required because of changes in the Work.

14.2 The Contract Price may only be increased by a Change Order when Work is modified in accordance with Article 13 and approved by the City in writing. Any claim for an increase in the Contract Price resulting from a Change Order shall be based on written notice delivered to the Project Manager within ten (10) days of the occurrence of the Change Order giving rise to the claim. Notice of the amount of the claim with supporting data shall be included in the Change Order and delivered within twenty (20) days of such occurrence unless Project Manager allows an additional period of time to ascertain accurate cost data. Any change in the Contract Price resulting from any such claim shall be incorporated in the Change Order. **IT IS EXPRESSLY AND SPECIFICALLY AGREED THAT ANY AND ALL CLAIMS FOR CHANGES TO THE CONTRACT PRICE SHALL BE WAIVED IF NOT SUBMITTED IN STRICT ACCORDANCE WITH THE REQUIREMENTS OF THIS SECTION.**

14.3 Not Included in the Cost of the Work: The term "cost of the Work" shall not include any of the following:

14.3.1 Payroll costs and other compensation of the Contractor's officers executives, principals (of partnership and sole proprietorships), general managers, engineers, architects, estimators, attorneys, auditor, accountants, purchasing and contracting agents, expediters, timekeepers, clerks and other personnel employed by the Contractor whether at the site or in the Contractor's principal or branch office for general administration of the work and not specifically included in the agreed upon schedule of job classifications referred to in Paragraph 14.1.1, all of which are to be considered administrative costs covered by the Contractor's fee.

14.3.2 Expenses of the Contractor's principal and branch offices other than the Contractor's office at the site.

14.3.3 Any part of the Contractor's capital expenses, including interest on the Contractor's capital employed for the Work and charges against the Contractor for delinquent payments.

14.3.4 Cost of premiums for all bonds and for all insurance whether or not the Contractor is required by the Contract Documents to purchase and maintain the same.

14.3.5 Costs due to the negligence of the Contractor, any subcontractor, or anyone directly or indirectly employed by any of them or for whose acts any of them may be liable, including but not limited to, the correction of defective Work, disposal of materials or equipment wrongly supplied and making good any damage to property.

14.3.6 Other overhead or general expense costs of any kind and the costs of any item not specifically and expressly included in Paragraph 14.1

14.4 Basis of Compensation: The Contractor's compensation, allowed to the Contractor for overhead and profit, shall be determined as follows:

14.4.1 A mutually acceptable negotiated fee:

14.4.1.1 For costs incurred under Paragraphs 14.1.1 and 14.1.2, the Contractor's fee shall not exceed five percent (5%).

14.4.1.2 No fee shall be payable on the basis of costs itemized under Paragraphs 14.1.3.1, 14.1.3.2, 14.1.3.3, 14.1.3.4, 14.1.3.5, 14.1.3.6, 14.1.3.7, 14.3.1, 14.3.2, 14.3.3, 14.3.4, 14.3.5 and 14.3.6.

14.4.1.3 The amount of credit to be allowed by the Contractor to the City for any such change which results in a net decrease plus a deduction in the Contractor's fee by an amount equal to five percent (5%) for the net decrease.

14.4.1.4 When both additions and credits are involved in any one change the combined overhead and profit shall be figured on the basis of net increase if any, however, not to exceed five percent (5%) of the agreed compensation. Profit will not be paid on any Work not performed.

14.5 Cost Breakdown Required: Whenever the cost of any Work is to be determined pursuant to this Article, the Contractor will submit in form acceptable to the City an itemized cost breakdown together with supporting documentation. Whenever a change in the Work is to be based upon mutual acceptance of a lump sum, whether the amount is an addition, credit, or no-charge-in-cost, the Contractor shall submit an estimate substantiated by a complete itemized breakdown:

14.5.1 The breakdown shall list quantities and unit prices for materials, labor, equipment and other items of cost.

14.5.2 Whenever a change involves the Contractor and one (1) or more subcontractors and the change is an increase in the agreed compensation, the overhead and profit percentage for the Contractor and each subcontractor shall be itemized separately.

14.6 Time for the City to Approve Extra Work: Any Extra Work in an amount up to and not exceeding a cumulative amount of $25,000 for a specific project can be approved by the City Manager and shall require a written Change Order proposal to be submitted to the Public Works Director for submittal and approval by the City Manager. Extra Work exceeding the cumulative amount of $25,000 for a specific project must be approved by the City Commission and a written Change Order proposal must be submitted to the Public Works Director for submittal and approval by the City Manager and City Commission. No financial or time claim for delay to the project resulting from the Change Order approval process outlined above under Section 14.6 will be allowed.

ARTICLE 15 – CHANGE OF THE CONTRACT TIME

15.1 The Contract Time may only be changed by a Change Order. Any claim for an extension in the Contract Time shall be based on written notice delivered to the Project Manager within five (5) days of the occurrence of the event giving rise to the claim. Any change in the Contract Time resulting from any such claim shall be incorporated in a Change Order.

15.2 The Contract Time will be extended in an amount equal to time lost due to delays beyond the control of the Contractor if a claim is made there for as provided in Paragraph 15.1. Such delays shall include but not be limited to, acts or neglect by the City, or to fires, floods, labor disputes, epidemics, abnormal weather conditions, or acts of God.

15.3 All time limits stated in the Contract Documents are of the essence. The provisions of this Article 15 shall not exclude recovery for damages for delay by the Contractor.

this Agreement, for any action or claim arising out of this Agreement. Nothing contained in this paragraph or elsewhere in this Agreement is in any way intended either to be a waiver of the limitation placed upon the City's liability as set forth in Section 768.28, Florida Statutes, or to extend the City's liability beyond the limits established in said Section 768.28; and no claim or award against the City shall include attorney's fees, investigative costs, expert fees, suit costs or pre-judgment interest.

20.2 No Extended Damages: For other and additional good and valuable consideration the receipt and sufficiency of which is hereby acknowledged, the Contractor covenants and agrees that in the event of any delay of construction or for any reason, allegation or claim, and notwithstanding the reason of the delay, reason, claim or allegation or who caused them or the construction delay or whether they were caused by the City, that there will be no entitlement to Contractor to or for any direct or indirect financial damages or losses for extended corporate overhead impact, extended project overhead impacts, project support services, mobilization or demobilization or by whatever other label or legal concept or theory and types of names or labels or basis such claims may have, or any business damages or losses of whatever type or nature, and Contractor hereby waives any right to make any such claim or claims. This provision will have application and effect when construction delays are anticipated and agreed upon by both the City and the Contractor.

ARTICLE 21 – GOVERNING LAW

21.1 This Agreement shall be governed by the laws of the State of Florida. Both Parties agree that the courts of the State of Florida shall have jurisdiction of any claim arising in connection with this Agreement. Venue for any claim, objection or dispute arising out of this Agreement shall be in Broward County, Florida. **By entering into this Contract, Contractor and City hereby expressly waive any rights either party may have to a trial by jury or any civil litigation related to, or arising out of the Project. Contractor shall specifically bind all subcontractors to the provisions of this Contract.**

ARTICLE 22 – MISCELLANEOUS

22.1 The duties and obligations imposed by this Agreement and the rights and remedies available to the parties and, in particular but without limitation, the warranties, guaranties and obligations imposed upon the Contractor and all of the rights and remedies available to the City, are in addition to, and are not to be construed in any way as a limitation of, any rights and remedies available to any or all of them which are otherwise imposed or available by laws or regulations, by special warranty or guarantee or by other provisions of the Contract Documents, and the provisions of this Paragraph will be as effective as if repeated specifically in the Contract Documents, and the provisions of this Paragraph will survive final payment and termination or completion of this Agreement.

22.2 The Contractor shall not assign or transfer this Agreement or its rights, title or interests. The obligations undertaken by the Contractor pursuant to this Agreement shall not be delegated or assigned to any other person or firm. Violation of the terms of this Paragraph shall constitute a material breach of Agreement by the Contractor and the City any, at its discretion, cancel this Agreement and all rights, title and interest of the Contractor which shall immediately cease and terminate.

22.3 The Contractor and its employees, volunteers and agents shall be and remain as independent contractors and not agents or employees of the City with respect to all of the acts and services performed by and under the terms of this Agreement. This Agreement shall not in any way be constructed to create a partnership, association or any other kind of joint undertaking or venture between the Parties.

22.4 The City reserves the right to audit the records of the Contractor relating in any way to the Work to be performed pursuant to this Agreement at any time during the performance and term of this Agreement and for a period of three (3) years after completion and acceptance by the City. If required by the City, the Contractor agrees to submit to an audit by an independent certified public accountant selected by the City. The Contractor shall allow the City to inspect, examine and review the records of the Contractor at any and all times during normal business hours during the term of this Agreement.

22.5 The remedies expressly provided in this Agreement to the City shall not be deemed to be exclusive but shall be cumulative and in addition to all other remedies in favor of the City now or later existing at law or in equity.

22.6 Should any part, term or provisions of this Agreement be decided by the courts to be invalid, illegal or in conflict with any state or federal law, the validity of the remaining portion or provision shall not be affected.

22.7 Prohibition Against Contracting With Scrutinized Companies: As to any contract for goods or services of $1 million or more and as to the renewal of any contract for goods or services of $1 million or more, subject to *Odebrecht Construction, Inc., v. Prasad*, 876 F.Supp.2d 1305 (S.D. Fla. 2012), *affirmed*, *Odebrecht Construction, Inc., v. Secretary, Florida Department of Transportation*, 715 F.3d 1268 (11th Cir. 2013), with regard to the "Cuba Amendment," the Contractor certifies that it is not on the Scrutinized Companies with Activities in Sudan List or the Scrutinized Companies with Activities in the Iran Petroleum Energy Sector List, and that it does not have business operations in Cuba or Syria, as provided in section 287.135, Florida Statutes (2019), as may be amended or revised. As to any contract for goods or services of any amount and as to the renewal of any contract for goods or services of any amount, the Contractor certifies that it is not on the Scrutinized Companies that Boycott Israel List created pursuant to Section 215.4725, Florida Statutes (2019), and that it is not engaged in a boycott of Israel. The City may terminate this Agreement at the City's option if the Contractor is found to have submitted a false certification as provided under subsection (5) of section 287.135, Florida Statutes (2019), as may be amended or revised, or been placed on the Scrutinized Companies with Activities in Sudan List or the Scrutinized Companies with Activities in the Iran Petroleum Energy Sector List or the Scrutinized Companies that Boycott Israel List created pursuant to Section 215.4725, Florida Statutes (2019), or is engaged in a boycott of Israel or has

been engaged in business operations in Cuba or Syria, as defined in Section 287.135, Florida Statutes (2019), as may be amended or revised.

22.8 Public Entity Crimes: In accordance with the Public Crimes Act, Section 287.133, Florida Statutes, a person or affiliate who is a contractor, consultant or other provider, who has been placed on the convicted vendor list following a conviction for a public entity crime may not submit a bid on a contract to provide any goods or services to the City, may not submit a bid on a contract with the City for the construction or repair of a public building or public work, may not submit bids on leases of real property to the City, may not be awarded or perform work as a contractor, supplier, subcontractor, or consultant under a contract with the City, and may not transact any business with the City in excess of the threshold amount provided in Section 287.017, Florida Statutes, for category two purchases for a period of thirty-six (36) months from the date of being placed on the convicted vendor list. Violation of this section by Contractor shall result in cancellation of the City purchase and may result in Contractor debarment.

22.9 Attorney Fees: If City or Consultant incurs any expense in enforcing the terms of this Agreement through litigation, the prevailing party in that litigation shall be reimbursed for all such costs and expenses, including but not limited to court costs, and reasonable attorney fees incurred during litigation.

22.10 Public Records

IF THE CONTRACTOR HAS QUESTIONS REGARDING THE APPLICATION OF CHAPTER 119, FLORIDA STATUTES, TO THE CONTRACTOR'S DUTY TO PROVIDE PUBLIC RECORDS RELATING TO THIS CONTRACT, CONTACT THE CUSTODIAN OF PUBLIC RECORDS AT PRRCONTRACT@FORTLAUDERDALE.GOV, 954-828-5002, CITY CLERK'S OFFICE, 100 N. ANDREWS AVENUE, FORT LAUDERDALE, FLORIDA 33301.

Contractor shall:

1. Keep and maintain public records required by the City in order to perform the service.

2. Upon request from the City's custodian of public records, provide the City with a copy of the requested records or allow the records to be inspected or copied within a reasonable time at a cost that does not exceed the cost provided in Chapter 119, Florida Statutes (2019), as may be amended or revised, or as otherwise provided by law.

3. Ensure that public records that are exempt or confidential and exempt from public records disclosure requirements are not disclosed except as authorized by law for the duration of the contract term and following completion of this contract if the Contractor does not transfer the records to the City.

4. Upon completion of the Contract, transfer, at no cost, to the City all public records in possession of the Contractor or keep and maintain public records required by the City to perform the service. If the Contractor transfers all public records to the City

upon completion of this Contract, the Contractor shall destroy any duplicate public records that are exempt or confidential and exempt from public records disclosure requirements. If the Contractor keeps and maintains public records upon completion of this Contract, the Contractor shall meet all applicable requirements for retaining public records. All records stored electronically must be provided to the City, upon request from the City's custodian of public records, in a format that is compatible with the information technology systems of the City.

APPLICABLE CONTRACT AGREEMENT

Las Olas Isles Undergrounding of Overhead Utilities
(Contractor)
Project 11715

CITY

IN WITNESS OF THE FOREGOING, the Parties have set their hands and seals the day and year first written above.

CITY OF FORT LAUDERDALE, a municipal corporation of the State of Florida

By: _____
CHRISTOPHER J. LAGERBLOOM
City Manager

ATTEST:

By: _____
JEFFREY A. MODARELLI
City Clerk

Approved as to Legal Form:
Alain E. Boileau, City Attorney

By: _____
RHONDA MONTOYA HASAN
Assistant City Attorney

SAMPLE CONSTRUCTION AGREEMENT

CONTRACTOR

WITNESSES:

CONTRACTOR.,
a Florida corporation.

_____ By:_____

_____ _____ _____
Print Name Print Name Title

_____

_____
Print Name ATTEST:

(CORPORATE SEAL) _____

Print Name: _____

Title: _____

STATE OF _____:

COUNTY OF _____:

The foregoing instrument was acknowledged before me by means of ☐ physical presence or ☐ online notarization, this _____ day of _____, 2020, by _____, (NAME OF AUTHORIZED OFFICER) as _____ (TITLE OF AUTHORIZED OFFICER), for _____ (NAME OF COMPANY), a Florida _____ (TYPE OF COMPANY).

_____
(Signature of Notary Public - State of Florida)

_____
(Print, Type, or Stamp Commissioned Name of Notary Public)

Personally Known_____ OR Produced Identification_____
Type of Identification Produced: _____

DETAILED SCOPE OF WORK & SCHEDULE OF PRICES

Detailed Scope of Work and Schedule of Prices for Area "B"

Project Location of Area "B"
The Project is located in an area known as "Las Olas Isles." It is bounded by Las Olas Boulevard on the North, New River on the South, Isles of Palm Drive on the East and Mola Avenue to the West.

Scope of Work - General
The primary scope under this bid consists of furnishing all labor, materials, equipment, tools, accessories, etc. and performing all related work such that overhead utilities belonging to Florida Power & Light (FPL), Comcast, ATT and any other utility could be undergrounded. It includes, but is not limited to, the installation of conduits, utility underground lines, hand holes, cable pull boxes, concrete transformer pads, pad mounted transformers, pad mounted switches, pad-mounted capacitors, and various other utility equipment and devices.

Other work includes:

1) Installation of conduits and connections to provide single phase power supply for each property
2) Milling, resurfacing and thermostriping of all streets where undergrounding work has been performed
3) Landscaping, primarily around the cabinets, transformers and as directed
4) Concrete curbing (D Curb)
5) All restoration according to the standards of the entities having jurisdiction over that work

Scope of Work - Individual Entity
Generally, all work related to various entities shall conform to their specified standards. Where no standards are specified, they shall meet the latest Florida Building Code (FBC) or as directed by the City's Public Works Director or his designee.

FPL: All work related to FPL shall conform to their construction plans. Their "Standards and Specification" are attached under Technical Specifications. FPL will supply all material, equipment, accessories, etc. and the Contractor shall be responsible for their proper installation, acceptable to FPL. Specifically, the Contractor shall, to FPL's satisfaction:

1) Install conduits and concrete products based on FPL's Standards and Specifications at locations as indicated on the Contract plans/drawings
2) Install cable, transformers, switch pads including, the primary and secondary terminations and connections. FPL will be responsible for energizing the new underground circuit(s) to the existing FPL electrical system
3) FPL will be responsible for removing their facilities after the underground is energized and all attachments are removed from the pole

Comcast: All work related to Comcast shall conform to their construction plans and standards. Unlike FPL, Comcast will provide and install their own material, equipment, accessories, etc. Contractor is responsible for installing conduits and related facilities.

ATT: All work related to ATT shall conform to their construction plans and standards. Unlike FPL, ATT will provide and install their own material, equipment, accessories, etc. Contractor is responsible for installing conduits and related facilities.

Additional Work - Overhead to Underground Service Conversions for Individual Property: The Bidder shall include in the bid price all costs associated with the modifications to the services of customers affected by this project. That includes arranging the conversion of overhead customer service (meter can) to an underground lateral (installation of the trench and conduit) that is to be tied into the new underground system. These modifications must be done through a licensed electrical contractor in accordance with all codes and FPL specs. The Contractor shall be responsible to trench and install FPL provided conduit including backfilling and landscape/pavement repairs along with the conversion of the meter can. FPL is responsible to install the cable and connect it to the new underground system. This service work is also to be coordinated with the local service planning office or by your qualified contractor using the appropriate notification/coordination.

Any cost associated with 3-phase is not a part of this project. However, it may be negotiated with the individual property owner separately, provided there is no conflict of interest with the City's project.

Milling, Leveling and Resurfacing: All work shall be performed as shown on the construction plans or drawings. Asphalt milling on travel lanes shall be approximately one (1) inch and resurfaced with one and one-quarter (1¼) inches of Type S-3 or Type SP 9.5. Prior to resurfacing, the Contractor shall ensure that a uniform leveling course of asphalt is applied to ensure smooth riding surface. Connection to existing driveways shall be flush and smooth and shall not cause any ponding of water or drainage complications. All construction shall conform to Florida Department of Transportation (FDOT) standards, which are adopted by reference. In case of ambiguity or discrepancy, the standards shall be as directed by the City's Public Works Director or his designee.

Landscaping: Landscaping work is incidental and hence there are no separate plans. There will be a lump sum allowance for this item. Type of landscaping would vary from one street to another and shall be as directed by the City's Project Manager.

Other Miscellaneous Work: If an item is in the Schedule of Prices but the quantities are not identified, the Bidder shall quote a unit or lump sum price for that time. Likewise, if a Bidder notices an item on the plans but it is not included in the Schedule of Prices, the Bidder should enter that item and quote a unit or lump sum price for that item also. In both cases, the Bidder must provide a statement explaining the basis of his Total Contract Price.

All incidentals not included in the pay items shall be identified separately and quoted separately. Alternatively, they could be identified separately but quoted as a lump sum price or spread out in various pay items with a statement to this effect.

Construction Plans

The City intends to award one single contract as described under the headings of Scope of Work – General; and Scope of Work – Individual Entity. Although every effort has been made to provide workable construction plans as received from FPL, Comcast and ATT, the bidders shall account for in their pricing, minor adjustment of work or minor adjustments in placement of mounting pads and

equipment, for no additional cost to the City. The plans have been prepared based on the best information available to the City and shall serve as a guide only. The Contractor shall be responsible for verifying all information, conflicts and layout prior to starting the work. A close coordination with the City's Project Manager is required.

Except for the plans provided by FPL, ATT and Comcast, there are no plans for milling, resurfacing and related road improvement. All work shall be coordinated with the City's Project Manager in the field, ensuring that all grades and geometric features are preserved and protected. Payment shall be made based on the quantities installed or constructed according to the unit prices in the Bid Schedule between the Contractor and City.

Schedule of Prices

FPL Work
Material to be provided by FPL and Contractor required to install them to FPL's specifications until tested and accepted by the FPL. Signed and sealed construction as-builts (as referenced in the Specifications) to be submitted to FPL for review and approval of installation of conduit and concrete products prior to energization. A legal description of all underground FPL facilities shall be submitted to FPL.

ATT Work
Conduits to be provided by ATT. Contractor required to install/underground them.

Comcast Work
Conduits to be provided by ATT. Contractor required to install/underground them.

City Work
Contractor to provide labor, material, equipment, tools and other resources to complete the work to City's satisfaction.

SEE CSV FILE FOR ANTICIPATED QUANTITIES.

Explanation of Units

LF: Linear Feet
SF: Square Feet
SY: Square Yard
LS: Lump Sum

Project Duration: 180 calendar days
Project Start: Within 30 days

Essential Conditions Related to Pricing and Payment

1. All bid prices shall be inclusive of furnishing all labor, superintendence, equipment, accessories, materials, tools, transportation, services, incidentals, etc., including sales tax and all other applicable tariffs and fees.

2. The Contractor agrees to perform all the Work described in the Contract Documents for the lump sum or unit prices as indicated above.

3. Payment shall be made based on the quantity of work completed or installed where unit prices are quoted.

4. Mobilization and Demobilization price, or any part thereof, shall not exceed five percent (5%) of the total contract price for each of the two activities.

5. The City reserves the right to add, delete or modify any or all pay items and/or quantities. All adjustments shall be made on the per unit price basis where unit prices are quoted. Other adjustments, if any, shall be based in a fair and equitable manner per the Contract Documents or mutually negotiated price between the Contractor and City. In the event the Contractor and City cannot come to an agreement on a price or price adjustment, the City shall have the right to complete that item or work by other means without invalidating the Contract. No claim of loss of profit shall be made against the City.

6. In the event, the quantities are found to be significantly less than noted on the Bid Schedule or deleted completely, the Contractor shall neither claim for, nor shall be entitled to loss of profit.

Certification

By submitting this Bid, the undersigned hereby confirms as follows that:

1. He/She is a duly authorized agent of the Firm/Individual submitting the proposal;
2. He/She has read the Proposal in its entirety and fully understands and accepts these terms;
3. Our Firm, _____, agrees to hold all prices, terms and conditions firm for acceptance for at least one hundred and twenty (120) calendar days following the date and time of the bid opening;
4. All resources to be used for this project are under our direct control or will be under our direct control and shall be available for performing the Work;
5. Our Firm is a contractor which is pre-qualified by Florida Power & Light (FPL) and has the necessary experience, including other utilities, required for the successful completion of this Project and for which this bid is being submitted.

Name of Firm:

Name of Agent:

Signature Agent:

Date Signed:

Work Plan and Activities

Please provide on a separate page, a Work Plan that explains Bidder's understanding of the Project and compliance with all work requirements stated herein.

TECHNICAL SPECIFICATIONS

SPECIFICATIONS

Florida Power & Light

ATT

Comcast

Florida Department of Transportation, FY 2020-21 Standard Plans for Road Construction [By Reference]
https://www.fdot.gov/design/standardplans/current/default.shtm

Florida Department of Transportation, Standard Specifications for Road and Bridge Construction, July 2020 Edition [By Reference]
https://www.fdot.gov/programmanagement/implemented/specbooks/default.shtm

City of Fort Lauderdale City Engineering Standard Details [By Reference]
https://www.fortlauderdale.gov/home/showdocument?id=7325
https://www.fortlauderdale.gov/home/showdocument?id=1524

FPL

Applicant Installed Facilities

Exhibit B

Standards and Specification

rev: March 2020

3.3.1 Survey As-Builts

3.3.1.1 The Surveyor shall obtain As-built Survey before back filling occurs. This field information is necessary for updating and correcting FPL work order drawings (usually Plan & Profile). The Surveyor is to record all as-built information in a field book. (See 4.0 Data Recording). All manholes, vaults, trench routes and duct bank locations are to be stationed to a baseline or reference line. The as-built information is to be referenced to this line. Elevations will be to NGVD 1929, NAVD 1988, or other established local datum. They are to be taken along the top of the duct bank or cable and at existing grade at 50-foot maximum intervals. Existing grade elevation shots (Top of Ground) are to be taken as close as practical to the elevation shots of the duct bank or cable being recorded. Additional elevations and grade shots are required when there is a change of elevation and/or direction of the cable or duct bank. Elevations are required on the roof of the manhole, rim if installed ,at existing grade and where the duct enters the manhole or feeder splice box. When other utilities are uncovered, (water, gas, sewer, telephone, etc.) their size, material and type are to determined, their location referenced to the base line, and their elevation noted. An elevation will be taken on the duct bank or cable directly above or below the other utility and at existing grade. As-built shall show the relation of installed facility to any easement provided by the permitting agency or others.

SPECIFICATIONS FOR UNDERGROUND CONDUIT INSTALLATION

1. Conduit, handhole, and transformer pad placement shall be in the easement provided and in accordance with the design drawings and field staking.
2. Use only FPL supplied conduit with FPL supplied bends. (Figure 1)
3. Glue all joints securely with FPL supplied glue. (Appendix A)
4. FPL conduit markers must be placed at all conduit ends. (Figure 1)
5. Primary conduit is to have a minimum of 36 inches of cover. Secondary conduit is to have a minimum of 24 inches of cover. (Figure 1). Secondary conduit may be placed at 36" depth when in the same trench as primary conduit.
6. All service and street light conduit is to have 24 – 30 inches of cover at property line. All future service stub-outs at transformer locations to be installed with 90's. Where primary, secondary, or street light conduit runs turn horizontally, 36 inch radius 90 degree bends are to be used.
7. Cap all ends of the conduit with FPL supplied end caps. Denote termination point of each conduit run on the capped end, (Appendix B). All conduit ends are to be terminated 1 – 2 feet above final grade except at transformer locations where conduit ends are to be terminated 3 inches above final grade. (Figure 3)
8. Install 1 #12 copper locate wire supplied by FPL in each trench per attached specs (Figure 4). All ends of the #12 copper locate wire must be exposed above grade, and secured with a tie wrap to a piece of stubbed up conduit for future locates. (Figure 4)
9. Conduits terminated at transformer locations to be installed with templates supplied by FPL per Figure 3A, 3B, or 3C according to the type of transformer being installed. (Consult your Service Planner).

10. Concrete transformer slabs provided by FPL are to be installed level on compacted fill at final grade and oriented as shown on the FPL design drawing(s) (Figure 3)

11. Conduits terminated at future secondary handhole locations to be installed per Figure 2. If secondary handholes are being installed at the time of conduit installation, install 45 degree bends as shown in Figure 1.

12. Primary splice handhole to be installed with electronic cable marker. (Figure 2A)

13. Install a continuous length of pull string in all conduit runs.

14. Backfill operations are to be done carefully with special attention given to utilizing clean fill, thereby assuring the elimination of rock and other scrap material to insure that the conduit will not be damaged or marking devices moved and proper compaction is achieved.

TESTING AND ACCEPTANCE GUIDELINES

Following notification of completed installation of underground conduits by a developer/contractor FPL will:

1. Randomly spot check the installation depth of conduits below grade at a minimum of 2 points between each primary termination point, (transformers, splice boxes & risers) noting the measured depth on the record drawing.

2. After confirming the correct routing and integrity of a conduit run, verify that the cable markers were installed and exposed conduit ends are plugged.

3. Confirm that a continuous length of pull string has been installed in all conduit runs and verify that all conduits runs terminate in the correct locations.

4. The final acceptance of the conduit installation will occur when FPL pulls the conductor and occupies the conduit.

L-17.0.5

LOCATING SINGLE PHASE TRANSFORMER PAD IN FRONT EASEMENT PREFERRED METHOD

L-17.0.5

City of Fort Lauderdale Bid 12453-13

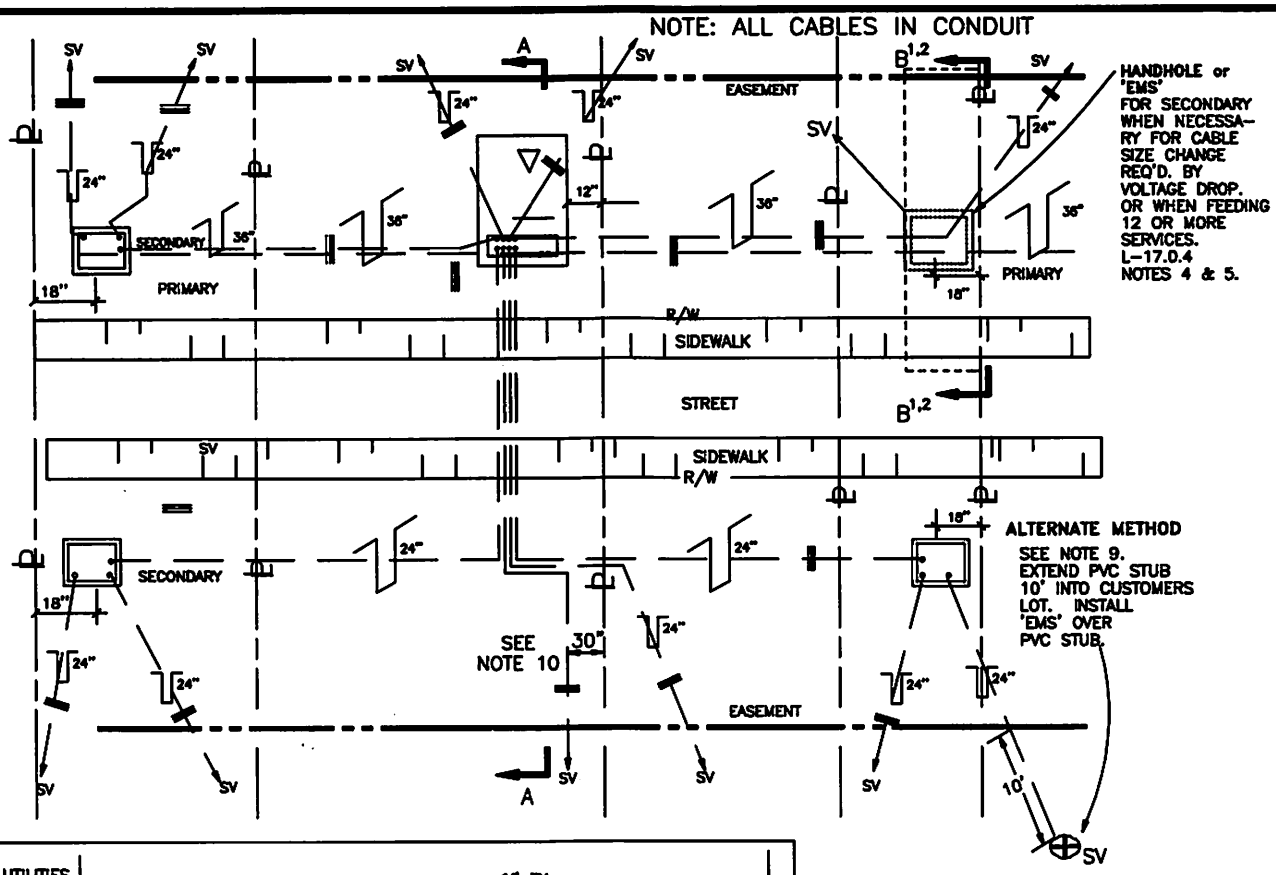

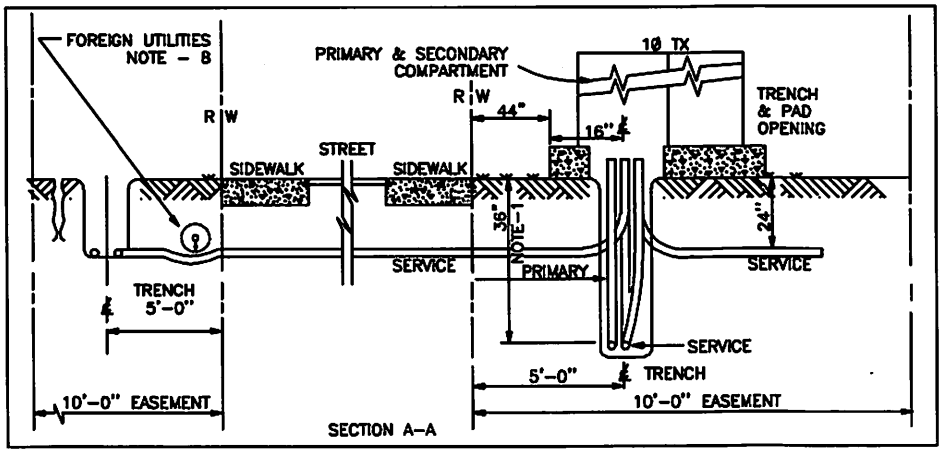

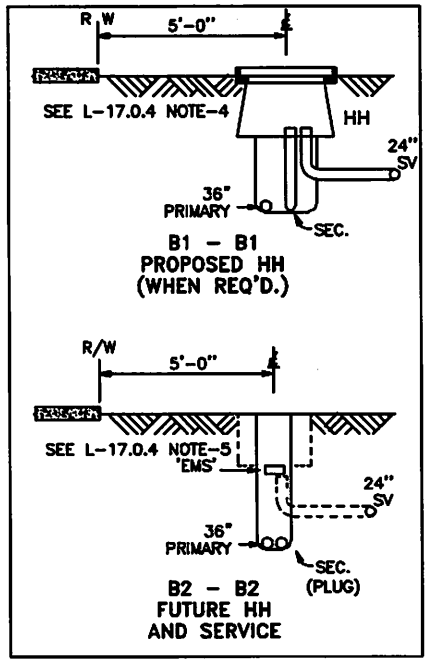

NOTES:

8. MINIMUM SEPARATION FROM FOREIGN PIPES, CONDUITS OR CABLES MUST BE AS FOLLOWS: FROM COMMUNICATION SYSTEMS (CATV, OR TELEPHONES), 3" OF CONCRETE OR 12" OF WELL TAMPED EARTH: FROM WATER, GAS, OR SEWER LINES, 12" OF WELL TAMPED EARTH, OR OTHER SEPARATION AGREED TO BY ALL PARTIES INVOLVED.
9. AS AN ALTERNATE METHOD EXTEND THE PVC 10' INTO THE CUSTOMERS PROPERTY & INSTALL AN 'EMS' OVER THE PVC STUB. USE THIS METHOD OF CONSTRUCTION ONLY WHEN YOU ARE UNABLE TO USE THE PREFERRED METHOD OF STUBBING THE PVC INSIDE THE HANDHOLE OR TO AVOID FUTURE CONFLICTS WITH FOREIGN UTILITIES INSTALLATIONS. THIS METHOD OF CONSTRUCTION CAN BE USED IN EITHER FRONT OR REAR EASTMENT.
10. PRIMARY, SECONDARY AND/OR SERVICE RUNS ADJACENT TO SIDE PROPERTY LINES SHOULD BE INSTALLED AT 30" FROM THE PROPERTY LINES WHENEVER POSSIBLE.

SUPERSEDES L-17 SH. 5 LAST REVISED ON 1-29-92

F P L

OH & UG DISTRIBUTION SYSTEM STANDARDS

NO.	DATE	REVISION	ORIG.	DRAWN	APPR.
3	8/15/05	UPDATE DRAWING	SMS	ELS	JJM
2	6/29/05	UPDATE DRAWING	SMS	ELS	JJM
1	8/18/99	CHANGE (L-17, SH 4) TO SEE L-17.0.4 & TITLE	SMS	PRH	JJM
0	8/9/96	CHANGE MINIMUM DEPTH	SMS	RAS	JJM

ORIGINATOR: SMS DRAWN BY: RAS

DATE: 8/9/96 APPROVED: J.J. MCEVOY SUPERVISOR, OH/UG PRODUCT SUPPORT SERVICES

12/8/2020 10:42 AM CAM 23-0228 Exhibit 1 Page 207 of 328

NOSCALE

MULTITAP CONNECTORS IN HANDHOLE (30"X48"X36") FOR CONNECTING 2 TO 5 SERVICES AND 1/0 PRIMARY SPLICE BOX

City of Fort Lauderdale

UN-19.0.0

Bid 12493-613

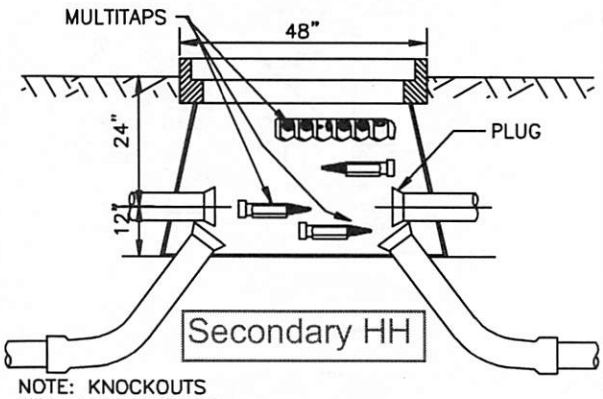

NOTE: KNOCKOUTS WILL ACCOMMODATE 5" PVC 2 KNOCKOUTS EACH SIDE

HANDHOLE ELEVATION

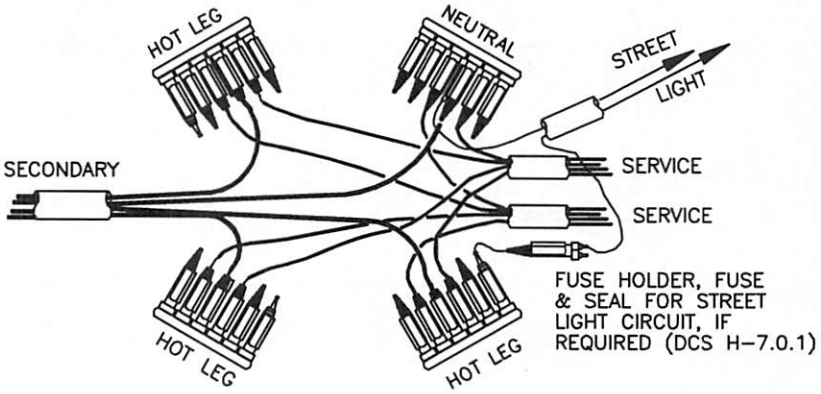

FOR EASE OF INSTALLATIONS TRAIN THE CABLES ABOVE GRADE, INSTALL THE MULTITAP CONNECTORS, THEN INSTALL INSIDE HANDHOLE

CONNECTION DIAGRAM (EXPANDED)

HANDHOLE USED FOR SECONDARY SERVICE

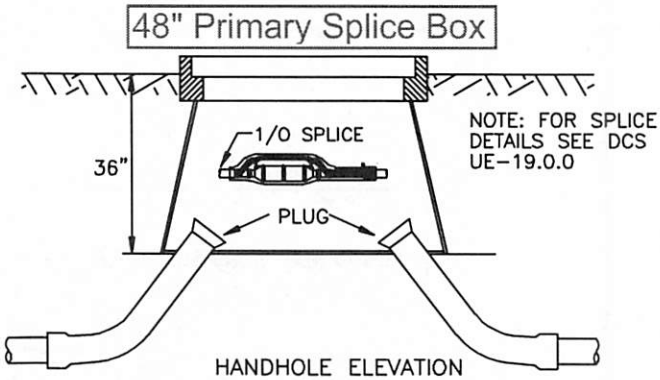

HANDHOLE ELEVATION

HANDHOLE USED AS A 1/0 PRIMARY SPLICE BOX

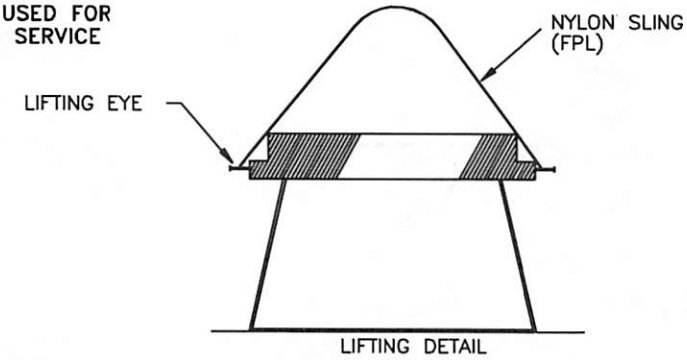

LIFTING DETAIL

HANDHOLE MAY BE LIFTED WITH OR WITHOUT COVER IN PLACE

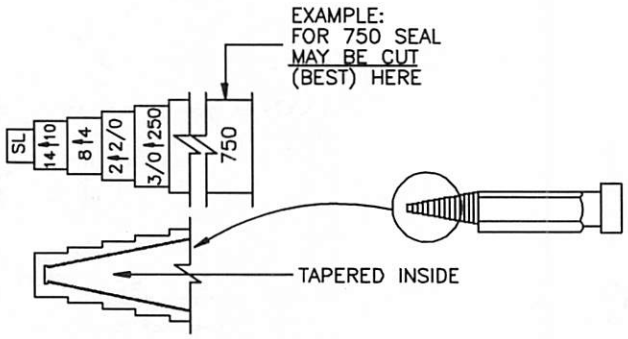

MULTITAP CONNECTOR M&S 163-017-502 FLOOD SEAL

NOTES:

1. MAXIMUM 1 SECONDARY CONDUIT WITH 2 TO 5 SERVICES.
2. MAXIMUM 3 SPLICES.
3. PROVIDE GROUNDING FOR ANY RUN GREATER THAN 650FT, INSTALL GROUND RODS AT THE 48" HANDHOLES TO GROUND THE CABLE. IF A HANDHOLE IS BEING INSTALLED IN A RUN FOR "CONVENIENCE" (TOO MANY BENDS IN THE RUN, CUTTING INTO A LOOP TO EXTEND INTO A CUL-DE-SAC, REPAIRING A DIG IN, ECT.) THERE IS NO NEED FOR THE GROUND RODS.
4. 6-PORT MULTITAP CONNECTOR M&S #163-017-502 WILL ACCOMMODATE #1/0 CABLE AND #400-#750 MCM COPPER OR ALUMINUM CABLES
5. WEIGHT:
   2 PIECE LID = 82 LBS. EACH
   BODY = 190 LBS.
6. LIFTING:
   COVER MAY BE LIFTED WITH THE HANDHOLE LID LIFTER (HOOK) TOOL M&S #593-930-021.
7. COMPLETE HANDHOLE, INCLUDES COVER M&S #162-121-004.
8. REPLACEMENT COVER M&S #162-121-012.
9. HANDHOLE SHOULD NOT BE EXPOSED TO VEHICULAR TRAFFIC, SUCH AS STREETS, PARKING LOTS, OR DRIVEWAYS.
10. FOR DRIVEWAY LOADING HANDHOLE 32"X50"X36" DEEP, USE M&S #162-122-892. (UX-202.0.0) APPROXIMATE WEIGHT 2,663 LBS.

NO.	DATE	REVISION	ORIG.	DRAWN	APPR.
8	7/29/11	UPDATE NOTE 3	ARR	ELS	BXN
7	2/4/10	UPDATE NOTE 4	ARR	ELS	JRD
6	6/16/08	UPDATE NOTES	GAP	ELS	JJM
5	8/16/05	UPDATE NOTES	RJO	ELS	JJM
4	11/18/03	UPDATE NOTES	RJO	ELS	JJM
3	7/16/01	UPDATE DRAWING (NOTES)	RAP	JES	JJM
2	9/27/99	UPDATE DRAWING (NOTES)	RAP	JES	JJM
1	8/09/96	ADDED EMS & NOTES 9., 10, & 11	SMS	RAS	JJM

F P L

OH & UG DISTRIBUTION SYSTEM STANDARDS

SUPERSEDES UN-19.0.0 LAST REVISED ON 9-30-94

ORIGINATOR: SMS

DRAWN BY: SMS

DATE: 9/30/94

APPROVED: J.J. MCEVOY
SUPERVISOR, OH/UG PRODUCT SUPPORT SERVICES

NO SCALE

CAM 23-0228
Exhibit 1

UX-115.0.2	CONDUIT LOCATIONS FOR OPEN WYE-OPEN DELTA USING TWO SINGLE PHASE LOW STYLE PAD MOUNTED TRANSFORMERS	UX-115.0.2

City of Fort Lauderdale Bid 12463613

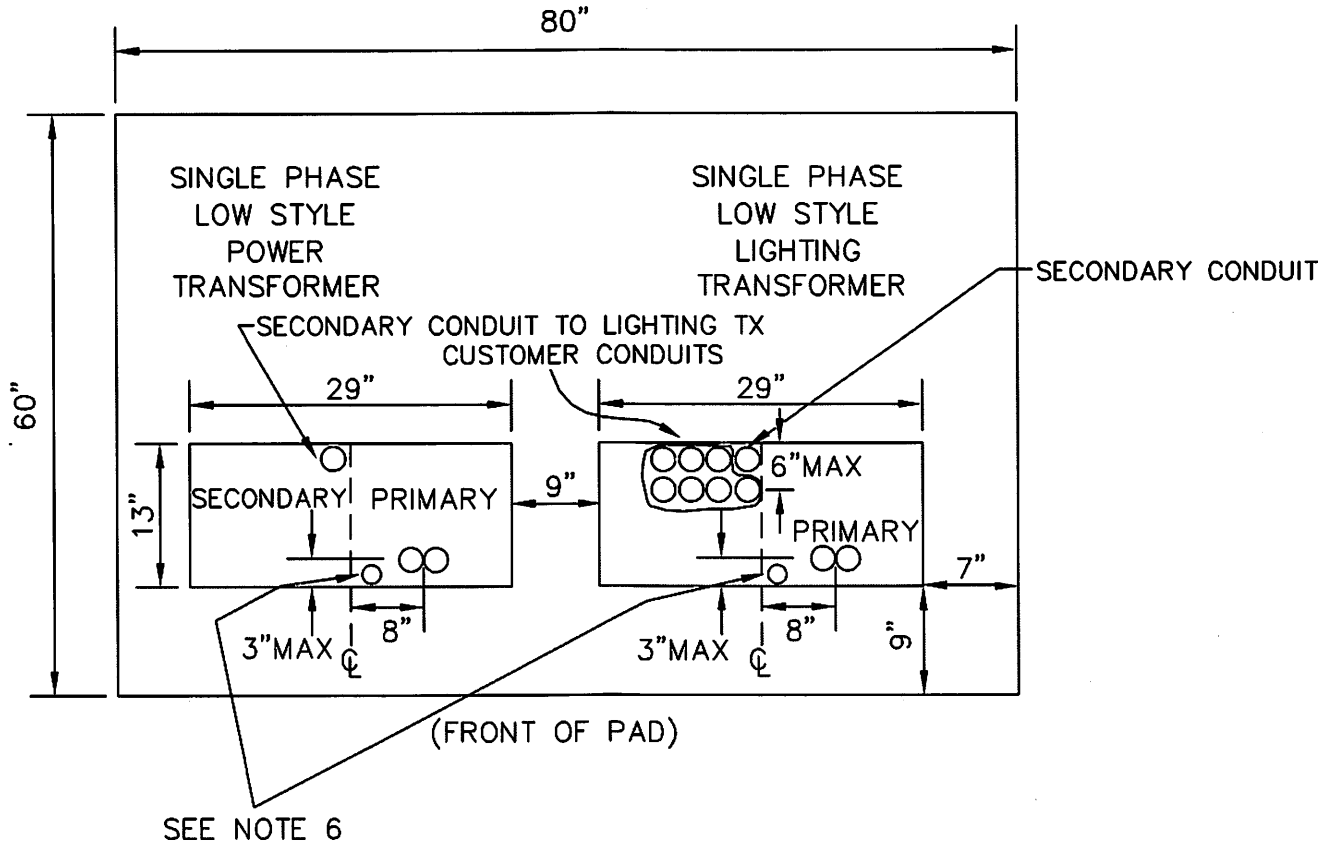

NOTES:

1. PAD M&S #162-246-001.
2. ALL CONDUITS TO EXTEND 3" MAX ABOVE GROUND LEVEL.
3. ALL CONDUIT RELATED DIMENSIONS ARE TO THE CENTER OF THE DUCT UNLESS OTHERWISE INDICATED.
4. MAINTAIN 8' CLEARANCE FROM FRONT AND 3' CLEARANCE FROM SIDES AND BACK OF TRANSFORMER PAD.
5. FOR ADDITIONAL DETAILS OF THE SECONDARY CONDUIT ROUTING UNDER THE PAD, REFER TO DCS PAGES I-68.0.2 AND I-68.0.3.
6. INSTALL 2" SLEEVE FOR GROUND ROD, 48" LONG.
7. CABLES REQUIRING CT METERING INSIDE THE TRANSFORMER MUST BE PLACED TOWARDS THE FRONT OPENING OF THE TX PAD AND IN FRONT OF ANY OTHER CABLES WHICH ARE NOT CT METERED INSIDE THE TRANSFORMER. THIS IS TO AVOID CABLE TRAINING ISSUES.

NO.	DATE	REVISION	ORIG.	DRAWN	APPR.
4	1/28/16	UPDATE NOTES	ARR	ELS	RDH
3	5/7/15	UPDATE DRAWING AND NOTES	ARR	ELS	RDH
2	10/31/14	UPDATE DRAWING AND NOTES	ARR	ELS	RDH
1	12/28/10	UPDATE DIMENSIONS	GAP	ELS	JJM

10:42 AM

F P L

OH & UG DISTRIBUTION SYSTEM STANDARDS

ORIGINATOR: SMS DRAWN BY: BILL

DATE: APPROVED: J.J McEVOY

SUPERVISOR, OH/UG PRODUCT SUPPORT SERVICES

NO. SCALE

UX-115.0.1

CONDUIT LOCATIONS FOR OPEN WYE-OPEN DELTA USING A SINGLE PHASE LOW STYLE PAD MOUNTED TRANSFORMER AND A 1ø REGULAR STYLE PAD MOUNTED TRANSFORMER

City of Fort Lauderdale

UX-115.0.1

Bid-12458-613

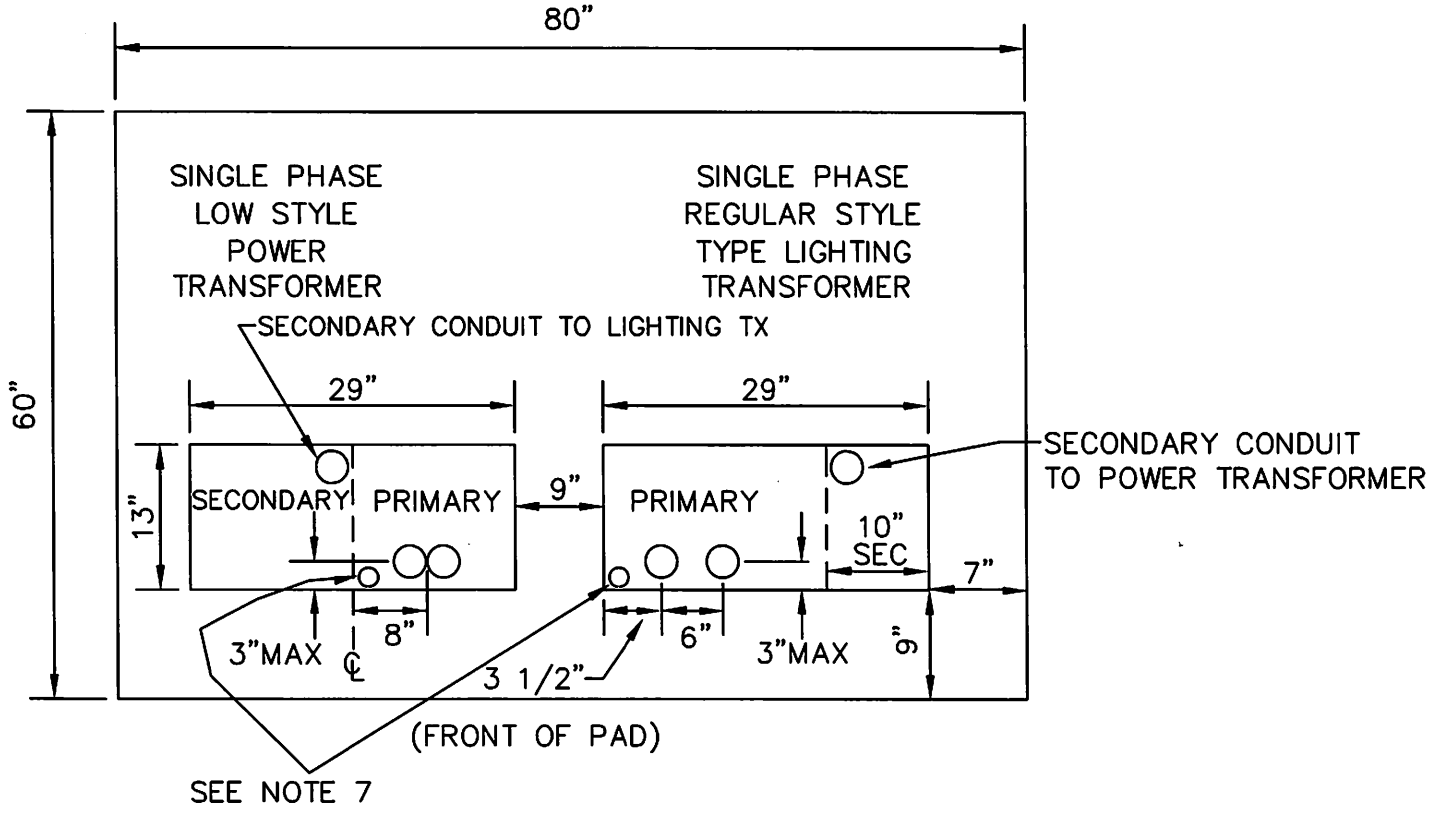

NOTES:

1. REFERENCE I-68.0.2 OF THE DCS.
2. PAD M&S #162-246-001 (6" PAD THICKNESS) AND #162-246-002 (24" PAD THICKNESS).
3. ALL CONDUITS TO EXTEND 3" MAX ABOVE GROUND LEVEL.
4. ALL SECONDARY / CUSTOMER CONDUITS MUST FIT WITHIN THE 10"X13" AREA INDICATED.
5. ALL CONDUIT RELATED DIMENSIONS ARE TO THE CENTER OF THE DUCT UNLESS OTHERWISE INDICATED.
6. MAINTAIN 8' CLEARANCE FROM FRONT AND 3' CLEARANCE FROM SIDES AND BACK OF TRANSFORMER PAD.
7. INSTALL 2" SLEEVE FOR GROUND ROD, 48" LONG.
8. CABLES REQUIRING CT METERING INSIDE THE TRANSFORMER MUST BE PLACED TOWARDS THE FRONT OPENING OF THE TX PAD AND IN FRONT OF ANY OTHER CABLES WHICH ARE NOT CT METERED INSIDE THE TRANSFORMER. THIS IS TO AVOID CABLE TRAINING ISSUES.

F P L

OH & UG DISTRIBUTION SYSTEM STANDARDS

NO.	DATE	REVISION	ORIG.	DRAWN	APPR.
4	9/13/16	UPDATE NOTE	ARR	ELS	RDH
3	1/28/16	UPDATE NOTE	ARR	ELS	RDH
2	5/7/15	UPDATE DRAWING	ARR	ELS	RDH
1	12/18/2020 10:42 AM	UPDATE DIMENSIONS	GAP	ELS	JJM

ORIGINATOR: SMS DRAWN BY: BILL

DATE: 7/21/14 APPROVED: J.J McEVOY

SUPERVISOR, OH/UG PRODUCT SUPPORT SERVICES

NO SCALE

CAM 23-0228
Exhibit 1
p. 115
Page 210 of 328

CONDUIT LOCATIONS FOR SINGLE PHASE REGULAR STYLE PAD MOUNTED TRANSFORMERS

City of Fort Lauderdale

UX-117.0.2

Bid 12458-613

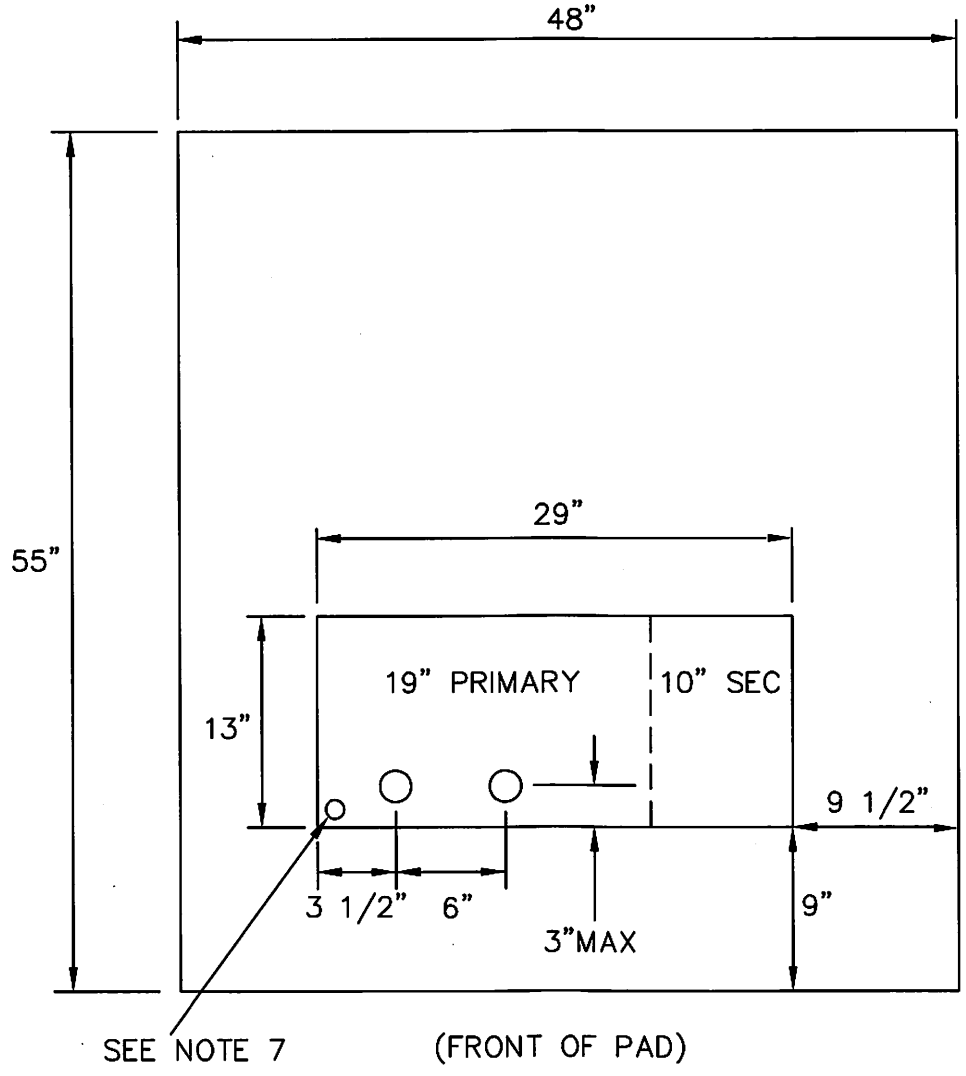

NOTES:

1. REFERENCE I-62.0.0 OF THE DCS.
2. PAD M&S #162-248-004.
3. ALL CONDUITS TO EXTEND 3" MAX ABOVE GROUND LEVEL.
4. ALL SECONDARY/CUSTOMER CONDUITS MUST FIT WITHIN THE 10"X13" AREA INDICATED.
5. ALL CONDUIT RELATED DIMENSIONS ARE TO THE CENTER OF THE DUCT.
6. MAINTAIN 8' CLEARANCE FROM FRONT AND 3' CLEARANCE FROM SIDES AND BACK OF TRANSFORMER PAD.
7. INSTALL 2" SLEEVE FOR GROUND ROD, 48" LONG.
8. CABLES REQUIRING CT METERING INSIDE THE TRANSFORMER MUST BE PLACED TOWARDS THE FRONT OPENING OF THE TX PAD AND IN FRONT OF ANY OTHER CABLES WHICH ARE NOT CT METERED INSIDE THE TRANSFORMER. THIS IS TO AVOID CABLE TRAINING ISSUES.

F P L

OH & UG DISTRIBUTION SYSTEM STANDARDS

NO.	DATE	REVISION	ORIG.	DRAWN	APPR.
2	1/28/16	UPDATE NOTES	ARR	ELS	RDH
1	12/4/2080 10:42 AM	UPDATE DRAWING	ARR	ELS	RDH

ORIGINATOR: SMS DRAWN BY: BILL

DATE: APPROVED: J.J McEVOY

SUPERVISOR, OH/UG PRODUCT SUPPORT SERVICES

NO SCALE

CAM 23-0228
Exhibit 1
p. 114
Page 211 of 328

UX-117.0.1 CONDUIT LOCATIONS FOR SINGLE PHASE LOW STYLE PAD MOUNTED TRANSFORMERS UX-117.0.1

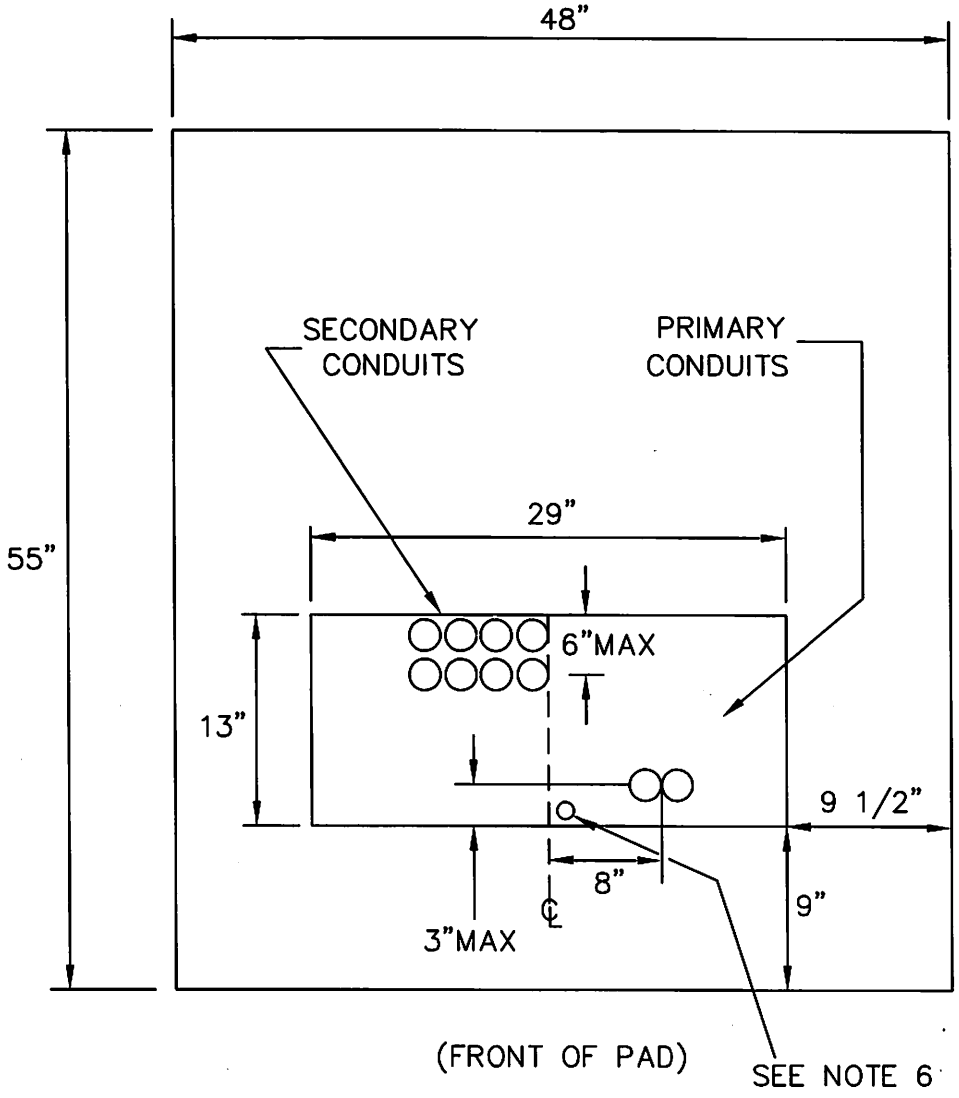

NOTES:

1. REFERENCE I-65.0.1 OF THE DCS.
2. PAD M&S #162-248-004.
3. ALL CONDUITS TO EXTEND 3" MAX ABOVE GROUND LEVEL.
4. ALL CONDUIT RELATED DIMENSIONS ARE TO THE CENTER OF THE DUCT UNLESS OTHERWISE INDICATED.
5. MAINTAIN 8' CLEARANCE FROM FRONT AND 3' CLEARANCE FROM SIDES AND BACK OF TRANSFORMER PAD.
6. INSTALL 2" SLEEVE FOR GROUND ROD, 48" LONG.
7. CABLES REQUIRING CT METERING INSIDE THE TRANSFORMER MUST BE PLACED TOWARDS THE FRONT OPENING OF THE TX PAD AND IN FRONT OF ANY OTHER CABLES WHICH ARE NOT CT METERED INSIDE THE TRANSFORMER. THIS IS TO AVOID CABLE TRAINING ISSUES.

FPL

OH & UG DISTRIBUTION SYSTEM STANDARDS

NO.	DATE	REVISION	ORIG.	DRAWN	APPR.
2	1/28/16	UPDATE NOTES	ARR	ELS	RDH
1	12/17/2010 10:42 AM	UPDATE DRAWING	ARR	ELS	RDH

ORIGINATOR: SMS DRAWN BY: BILL

DATE: APPROVED: J.J McEVOY

SUPERVISOR, OH/UG PRODUCT SUPPORT SERVICES

NO SCALE

FIGURE 4

1 - #12C INSTALLATION

When installing conduit only (cable to be pulled later), a single #12 copper insulated wire is to be direct buried in every trench at the same depth as the conduits. The ends of the wire are to be terminated above ground at the conduit ends as shown. This wire will allow empty plastic conduits to be located with electronic equipment.

This method is not intended for cases where conduit is installed strictly for road crossings only. In these cases EOM markers should be used to mark the conduit ends.

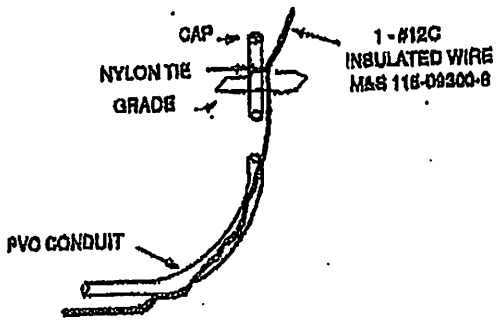

WHERE TO INSTALL #12C WIRE

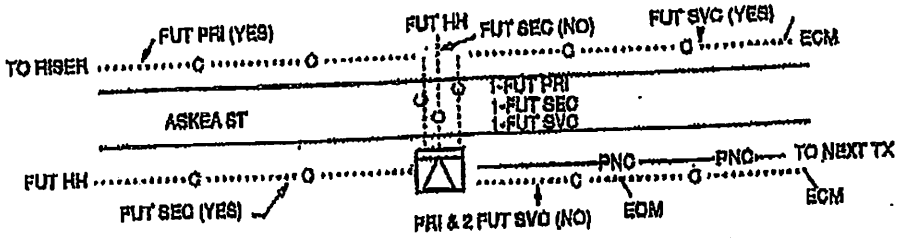

DRAWING SYMBOLS

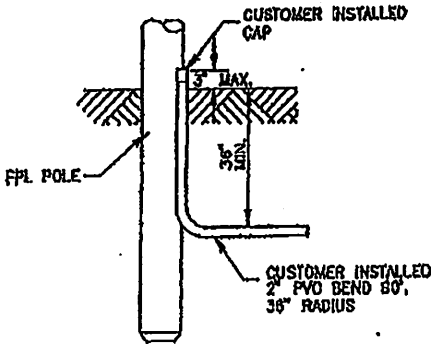

TYPICAL PVC CONDUIT BEND AT RISER POLE INSTALLATION

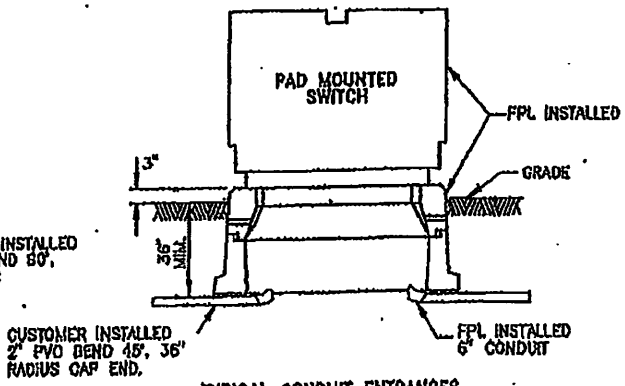

TYPICAL CONDUIT ENTRANCES TO PAD MOUNTED SWITCH

SYMBOLS

	EXISTING	PROPOSED
CONDUCTORS – PRIMARY FPL OWNED, IN CONDUIT, WITH CONDUCTOR SIZE, METAL, RATED VOLTAGE INSULATION AND NEUTRAL INDICATED.	—PNC—	—PNC—
CONDUCTORS – SECONDARY – STREET LIGHT FPL OWNED, IN CONDUIT, WITH CONDUCTOR SIZE, METAL AND INSULATION INDICATED (HM/HD TPX SHOWN).	1/0A	4/0A
SERVICE LATERALS THREE-WIRE SECONDARY SERVICE. FPL OWNED IN CONDUIT WITH CONDUCTOR SIZE, METAL, INSULATION AND JACKET INDICATED.	3-2C RN	1/0A TPX
EMPTY CONDUIT	—C—	—C— —C—
PADMOUNTED TRANSFORMERS PADMOUNTED TRANSFORMER, 1Ø, WITH KVA RATING (FRONT, OR TERMINAL, CHAMBER, IS SMALL RECTANGLE AT RIGHT END OF SYMBOL. PRIMARY PHASE (INDICATED) TRANSFORMER STYLE SHOWN AS FOLLOWS: (RS) – REGULAR SIZE – 42" + HIGH, (DF) – DEAD FRONT – 32 " + HIGH, (LS) – LOW STYLE – 24" + HIGH.	B 15	B 15
STRUCTURES ELECTRONIC CABLE MARKER AND OR SPLICE PIT (BURIED)		
SERVICE HANDHOLE		

FPL

RECOMMENDED PRACTICES FOR FIELD JOINING OF PVC CONDUIT (USING CLEAR SOLVENT CEMENT) AND PVC CONDUIT INSTALLATION

City of Fort Lauderdale

UN-27.0.0

Bid 12458613

FIELD JOINING

1. EXAMINE EACH LENGTH OF CONDUIT AND ENSURE THERE ARE NO INTERIOR OR EXTERIOR IMPERFECTIONS, CRACKS, ETC. REMOVE ALL FOREIGN MATERIAL FROM INSIDE CONDUIT.

2. USING A HACKSAW, (594-40600-7) FINE TOOTH WOOD SAW, OR NYLON STRING, CUT PIPE SQUARE (IF REQUIRED). REMOVE ANY BURRS AND BEVEL ANY SHARP EDGES. WIPE DRY WITH A CLEAN, DRY CLOTH.

3. APPLY CEMENT (M & S #522-14100-7) UNIFORMLY ON INSIDE OF BELL OR FITTING. APPLY UNIFORM COAT OF CEMENT ONTO CONDUIT END. DO NOT POUR, SPLASH, OR GLOB CEMENT ON!

4. IMMEDIATELY INSERT THE CONDUIT INTO THE BELL END OF FITTING ALL THE WAY TO THE INSIDE SHOULDER. ENSURE SNUG FIT AND TURN CONDUIT 1/4 TURN TO DISTRIBUTE CEMENT EVENLY.

5. HOLD JOINT FOR APPROXIMATELY ONE MINUTE TO ALLOW CEMENT TO BEGIN SETTING. WIPE OFF EXCESS CEMENT.
   (NOTE: MANUFACTURER RECOMMENDATIONS ARE TO ALLOW FOR A MINIMUM OF 10 MINUTES OF DRYING TIME PRIOR TO ANY BACKFILLING. WEATHER CONDITIONS MAY VARY THIS SETTING TIME.)

FIELD INSTALLATION

1. LAY CONDUIT RUN INTO TRENCH. DO NOT KICK, THROW OR SLAM IT IN!

2. SURROUNDING TRENCH BACKFILL MUST BE FREE OF LARGE OR SHARP ROCKS, CINDERS OR OTHER DEBRIS WHICH WILL DAMAGE CONDUITS DURING BACKFILL OPERATION OR SUBSEQUENT COMPACTION.

3. IN CORAL ROCK AREAS, IT IS RECOMMENDED THAT HAND BACKFILLING FOR THE FIRST 3 TO 6 INCHES BE PERFORMED.

4. INSTALL PLUGS OR END BELLS ON ALL VACANT DUCTS, AS REQUIRED.

5. THE FINISHED CONDUIT RUN SHALL BE RODDED IN AN APPROVED MANNER (I.E. WINCH LINE, MANDREL, ETC.) TO VERIFY CONTINUITY AND CLEANLINESS. (NOTE: NO CONDUIT RUN SHALL BE ACCEPTED AS PROPERLY INSTALLED UNLESS FREE PASSAGE IS OBTAINED AND VERIFIED BY FPL SUPERVISION.)

FPL

OH & UG DISTRIBUTION SYSTEM STANDARDS

UN

NO.	DATE	REVISION	ORIG.	DRAWN	APPR.
1	7/16/01	UPDATE DRAWING (TEXT)	RAP	JES	JJM

12/14/2020 10:42 AM

ORIGINATOR: CM

DRAWN BY: BQ

DATE: 9-30-94

APPROVED: R.J. SALESKY
DIRECTOR, DISTRIBUTION ENGINEERING AND OPERATIONS SERVICES

CAM 23-0228
Exhibit 1
Page 215 of 328

NO SCALE

UN-21.0.0 PROTECTIVE BARRIER AND PLANTING CLEARANCES FOR PAD MOUNT TRANSFORMERS AND SWITCHES UN-21.0.0

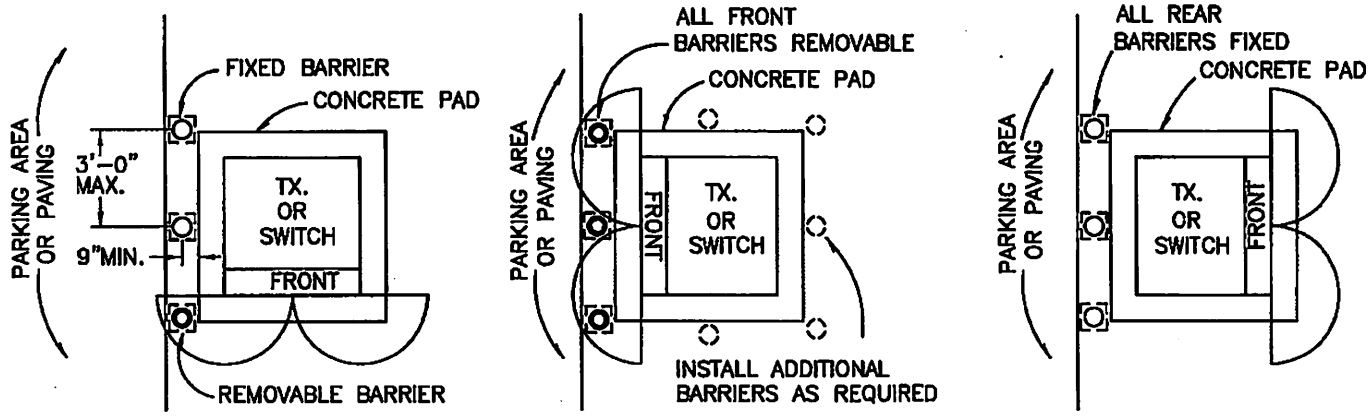

PLAN

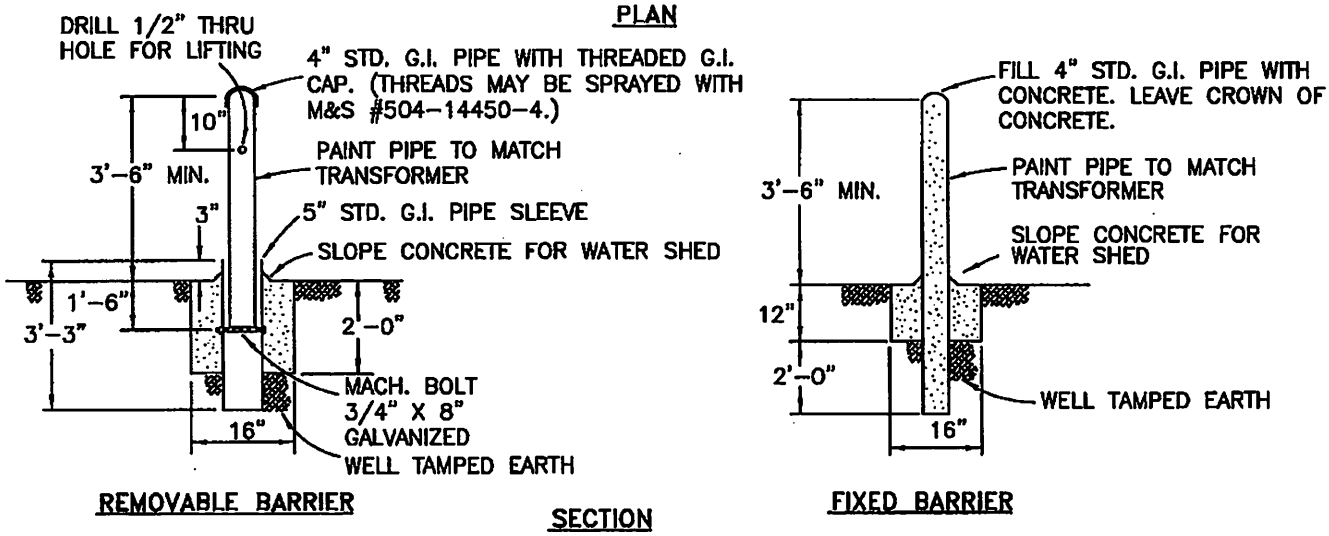

REMOVABLE BARRIER

SECTION

FIXED BARRIER

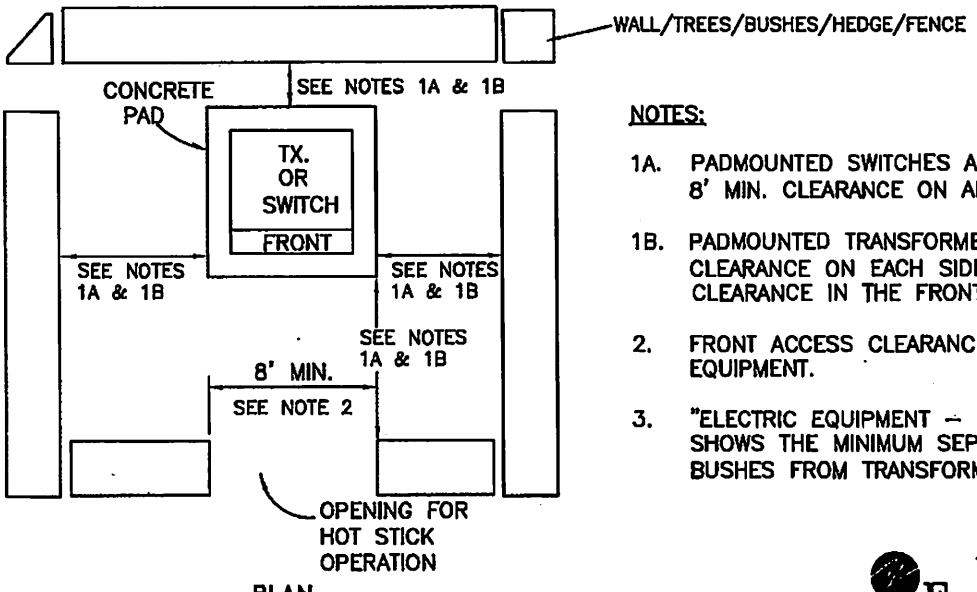

PLAN

NOTES:

1A. PADMOUNTED SWITCHES AND CAPACITOR BANKS REQUIRE 8' MIN. CLEARANCE ON ALL SIDES.

1B. PADMOUNTED TRANSFORMERS REQUIRE 3' MIN. CLEARANCE ON EACH SIDE AND BACK AND 8' CLEARANCE IN THE FRONT.

2. FRONT ACCESS CLEARANCE SHOULD BE 8' FOR ALL EQUIPMENT.

3. "ELECTRIC EQUIPMENT – KEEP OUT" DECAL THAT SHOWS THE MINIMUM SEPARATION DISTANCES FOR BUSHES FROM TRANSFORMERS IS M&S #548-560-101.

FPL

OH & UG DISTRIBUTION SYSTEM STANDARDS

UN

NO	DATE	REVISION	ORIG.	DRAWN	APPR.
5	3/3/17	UPDATE DRAWING (NOTES)	ARR	ELS	RDH
4	9/13/16	UPDATE DRAWING (NOTES)	ARR	ELS	RDH
3	9/17/13	UPDATE DRAWING (NOTES)	JJR	ELS	WM
2	7/16/01	UPDATE DRAWING (NOTES)	RAP	JES	JJM
1	8/27/99	UPDATE DRAWING (NOTES)	RAP	JES	JJM
0	9/30/94	ORIGINAL DRAWING	CJM	PMG	RJS

ORIGINATOR: CJM DRAWN BY: PTH

DATE: 9/30/94 APPROVED: R.J. SALESKY NO SCALE

DIRECTOR, DISTRIBUTION ENGINEERING AND OPERATIONS SERVICES

City of Fort Lauderdale Bid 12953813

GENERAL ALL UNDERGROUND CIRCUITS SHOULD BE IDENTIFIED WHERE APPLICABLE AS FOLLOWS:

FEEDER NUMBER
SWITCH NUMBER
PHASE
CONDUCTOR SIZE, METAL, TYPE INSULATION AND VOLTAGE RATE (IF NOT SAME AS OPERATING VOLTAGE)
SOURCE OR DIRECTION OF FEED
OWNERSHIP
ADDRESS OF BUILDING SERVED
TLM NUMBER
DATE OF FAILURE ON SECTION OF CABLE (DIRECT BURIED ONLY)
ANY UNUSUAL CONDITIONS, I.E. CABLE IN CONDUIT, PARTIALLY IN CONDUIT, DIRECT BURIED, ETC.

ALL CIRCUITS AND VACANT CONDUITS SHOULD BE APPROPRIATELY IDENTIFIED AT EACH TERMINAL OR SWITCHING POINT AND ALL INTERMEDIATE LOCATIONS SUCH AS VAULTS, MANHOLES, PAD MOUNTED TRANSFORMERS, OR HANDHOLES. WHEN THE CIRCUIT OR VACANT CONDUIT IS OWNED BY OTHER THAN FLORIDA POWER & LIGHT COMPANY, SHOW "CUST" ON APPROPRIATE TAG. IF NECESSARY INFORMATION CANNOT BE SHOWN ON ONE TAG, USE ADDITIONAL TAGS.

INFORMATION WILL BE PLACED ON APPROVED TAGS SHOWN BELOW IN THE MANNER DESCRIBED FOR THE PARTICULAR CONDITION.

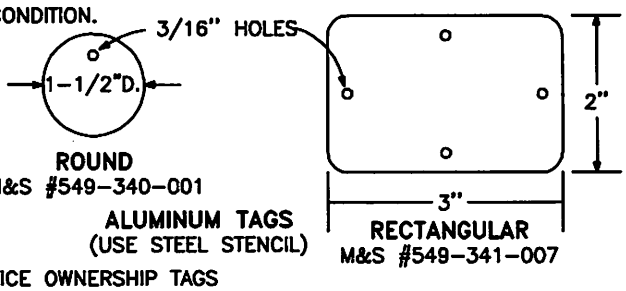

ROUND
M&S #549-340-001

ALUMINUM TAGS
(USE STEEL STENCIL)

RECTANGULAR
M&S #549-341-007

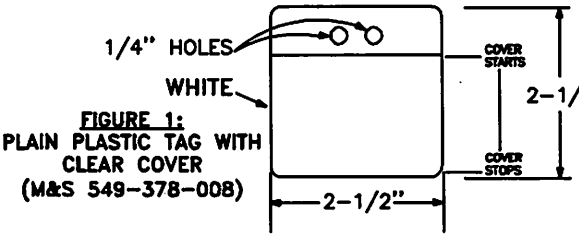

FIGURE 1:
PLAIN PLASTIC TAG WITH CLEAR COVER
(M&S 549-378-008)

IMPORTANT
USE INDELIBLE MARKING PEN ONLY (M&S #549-501-004)

SERVICE OWNERSHIP TAGS
PLACE INSIDE METER CAN. USE TIE WRAP TO ATTACH TAG TO CONDUCTORS. PRINT ADDRESS USING MARKING PEN (M&S #549-50100-4)

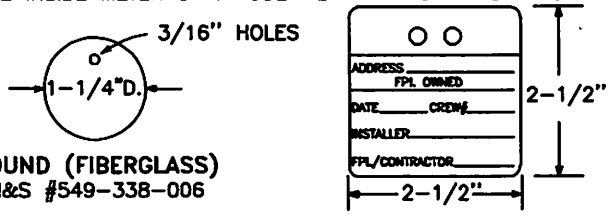

ROUND (FIBERGLASS)
M&S #549-338-006

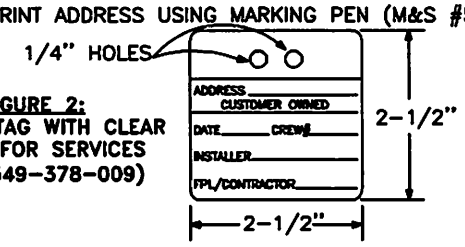

FIGURE 2:
PLASTIC TAG WITH CLEAR COVER FOR SERVICES
(M&S 549-378-009)

UNGERGROUND DUCT & MANHOLE SYSTEMS

USE ALUMINUM TAGS, AFFIXED TO CABLES WITH #12C-TW ON ALL CIRCUITS IN UNDERGROUND SYSTEMS, SUCH AS SUBWAY VAULTS, MANHOLES, RISER POLES, ECT. ROUND ALUMINUM TAGS ARE FOR FEEDER NUMBER AND PHASE IDENTIFICATION. RECTANGULAR ALUMINUM TAGS ARE USED FOR ALL OTHER IDENTIFICATION PURPOSES FOR EXAMPLE, ON ISOLATED NEUTRAL CONDUCTORS OF PILC CABLES, ETC.

DIRECT BURIED AND CABLE IN CONDUIT SYSTEMS

USE PLASTIC TAGS AS SHOWN IN FIGURE 2 (M&S 549-378-009) FOR CUSTOMER IDENTIFICATION AT LOCATIONS THAT WILL BE SUBJECTED TO SUNLIGHT, SUCH AS RISERS, AND ALSO IN URD APPLICATIONS FOR IDENTIFYING SERVICES, SUCH AS PADMOUNTED TRANSFORMERS AND HANDHOLES. USE PLAIN PLASTIC TAGS AS SHOWN IN FIGURE 1 (M&S 549-378-008) IN PRIMARY TERMINATION TAGGING APPLICATIONS. PLASTIC TAGS HAVE A CLEAR, UV RESISTANT FLAP TO REDUCE FADING AND WEATHERING. ALLOW 10 SECONDS MINIMUM DRYING TIME TO PREVENT SMEARING BEFORE ADHERING THE CLEAR FLAP. FASTEN PLASTIC TAG TO CABLE WITH 5-3/4" BLACK TIE-WRAPS (M&S 534-250-001) OR 12" BLACK PLASTIC TIE-WRAPS (M&S 534-253-000).

EXAMPLE OF MARKING SECONDARY CABLES

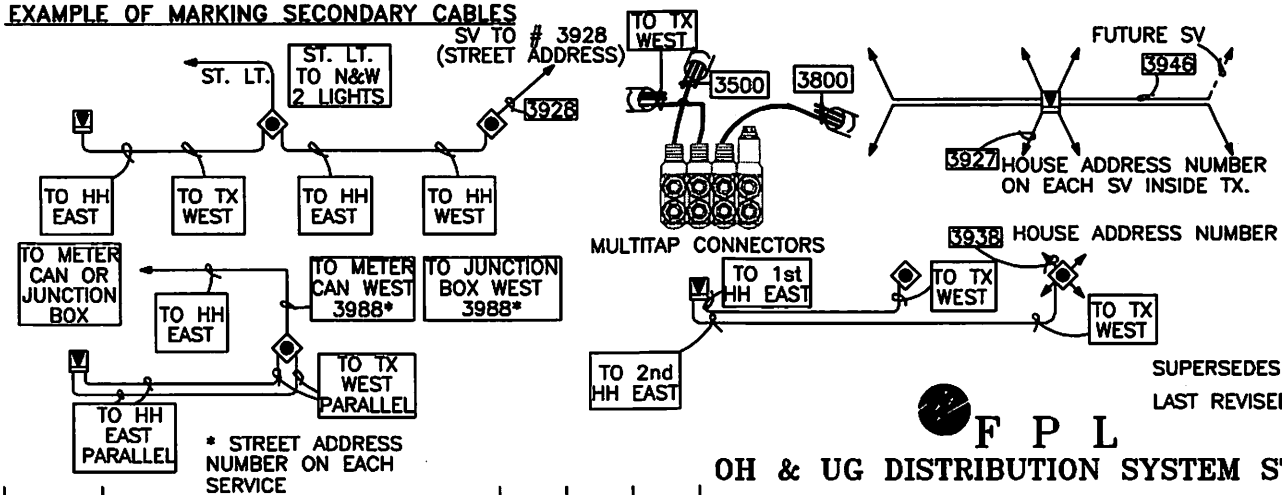

SUPERSEDES UV-12.0.0
LAST REVISED ON 3/15/91

F P L

OH & UG DISTRIBUTION SYSTEM STANDARDS

NO.	DATE	REVISION	ORIG.	DRAWN	APPR.
3	6/15/09	UPDATE DRAWING	AR	ELS	JRD
2	9/29/08	UPDATE DWG AND NOTES	GAP	ELS	JJM
1	7/16/01	REVISED TEXT AND ADDED A DETAIL DWG.	RAP	JES	JJM
0	12/14/2023 9/30/94	CHANGED PAGE FORMAT AND REVISED NOTES AND DIMENSIONS	RJO	MLG	RJS

ORIGINATOR: RJO DRAWN BY: MLG

DATE: 9-30-94 APPROVED: R.J. SALESKY
DIRECTOR, DISTRIBUTION ENGINEERING AND OPERATIONS SERVICES

CAM 23-0228
Exhibit 1
Page 327 of 328

UV

NO SCALE

City of Fort Lauderdale Bid 12693-613

PRIMARY and SECONDARY PHASE MARKING TAPE

SIZE	COLOR	M&S NUMBER
1" WIDE X 36 YARDS LONG	YELLOW	549-441-001
1-1/2" WIDE X 36 YARDS LONG	BLACK	549-441-002
2" WIDE X 36 YARDS LONG	YELLOW	549-442-008
3/4" WIDE X 66 FEET LONG	BLACK	532-269-006
3/4" WIDE X 66 FEET LONG	WHITE	532-218-002
1/2" WIDE X 20 FEET LONG	(8)COLOR PACK (RED, WHITE, BLUE, GREEN, YELLOW, BROWN, VIOLET, ORANGE)	549-443-100

TY-RAPS IDENTIFICATION TABLE

COLOR	M&S NUMBER	LENGTH	WIDTH
BROWN	534-254-014	7.4"	.19"
RED	534-254-022	7.4"	.19"
ORANGE	534-254-031	7.4"	.19"
YELLOW	534-254-049	7.4"	.19"
GREEN	534-254-057	7.4"	.19"
BLUE	534-254-065	7.4"	.19"
PURPLE	534-254-073	7.4"	.19"
GREY	534-254-081	7.4"	.19"
WHITE	534-255-002	14.5"	.30"

NO.	DATE	REVISION	ORIG.	DRAWN	APPR.
5	6/6/16	UPDATED CHART	AR	ELS	RDH
4	2/27/13	UPDATED CHART	AR	ELS	WM
3	2/12/13	ADDED M&S 594-441-002	AR	ELS	WM
2	9/29/09	UPDATED TITLE BLOCK & ADDED M&S #594-443-000	AR	ELS	JRD
1	6/15/09	UPDATE TITLE FOR BOTH CHARTS	AR	ELS	JRD

12/14/2020 10:43 AM

FPL
OH & UG DISTRIBUTION SYSTEM STANDARDS
ORIGINATOR: RAP DRAWN BY: J.SHOUP
DATE: 7/16/01 APPROVED: J.J McEVOY CAM 23-0228
SUPERVISOR, OH/UG PRODUCT SUPPORT SERVICES NO SCALE

UV

C-32.0.1 TYPICAL INSTALLATION OF 15 OR 25 KV S & C TYPE PME DEAD FRONT THREE PHASE PAD MOUNTED SWITCHGEAR C-32.0.1

STYLE IDENTIFICATION AND 3 PHASE CONNECTION DIAGRAMS

S&C TYPE PME-9

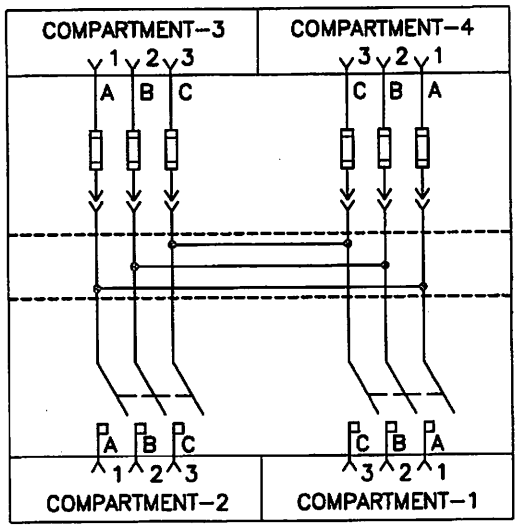

SWITCHGEAR		REQUIRES FUSEHOLDER	
M&S NO.	RATED VOLTAGE	M&S NO.	QTY
270-67400-7	15KV	531-56150-1	6
270-67401-5	15KV SS*	531-56150-1	6
270-67200-4	25KV	531-56310-5	6
270-67201-2	25KV SS*	531-56310-5	6

S&C TYPE PME-11

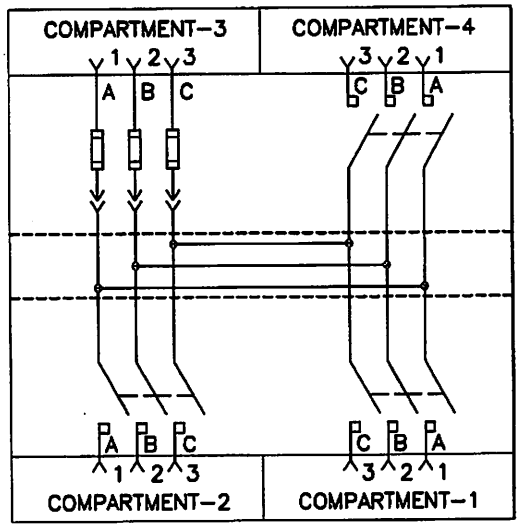

SWITCHGEAR		REQUIRES FUSEHOLDER	
M&S NO.	RATED VOLTAGE	M&S NO.	QTY
270-67900-9	15KV	531-56150-1	3
270-67901-7	15KV SS*	531-56150-1	3
270-68100-3	25KV	531-56310-5	3
270-68101-1	25KV SS*	531-56310-5	3

S&C TYPE PME-10

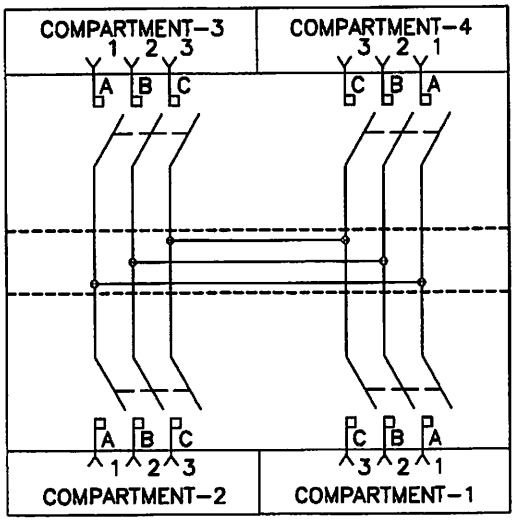

SWITCHGEAR	
M&S NO.	RATED VOLTAGE
270-683-000	15KV
270-683-050	15KV SS*
270-684-000	25KV
270-684-050	25KV SS*

* (SS) INDICATES ENCLOSURES OF #304 STAINLESS STEEL FOR USE IN HIGHLY CORROSIVE AREAS

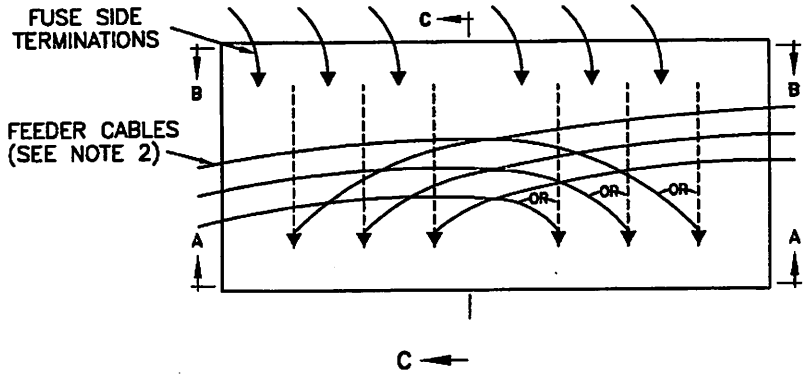

TOP VIEW
DIAGRAM FEEDER CABLE LAYOUT
(PME-9 SHOWN)

F P L
OH & UG DISTRIBUTION SYSTEM STANDARDS

NO.	DATE	REVISION	ORIG.	DRAWN	APPR.
2	06/06/01	ADDED PME-10	CEA	JES	JJM
1	9/30/94	REMOVED DEADFRONT SW NOTE AND ADDED NEW BORDER	RWS	RAS	RJS

ORIGINATOR: RWS DRAWN BY: JRG

DATE: 6/30/93 APPROVED: R.J. SALESKY
DIRECTOR, DISTRIBUTION ENGINEERING AND OPERATIONS SERVICES

NO SCALE

CAM 23-0228

C-32.0.2

TYPICAL INSTALLATION OF 15 OR 25KV S&C TYPE PME DEAD FRONT THREE PHASE PAD MOUNTED SWITCHGEAR

City of Fort Lauderdale

C-32.0.2

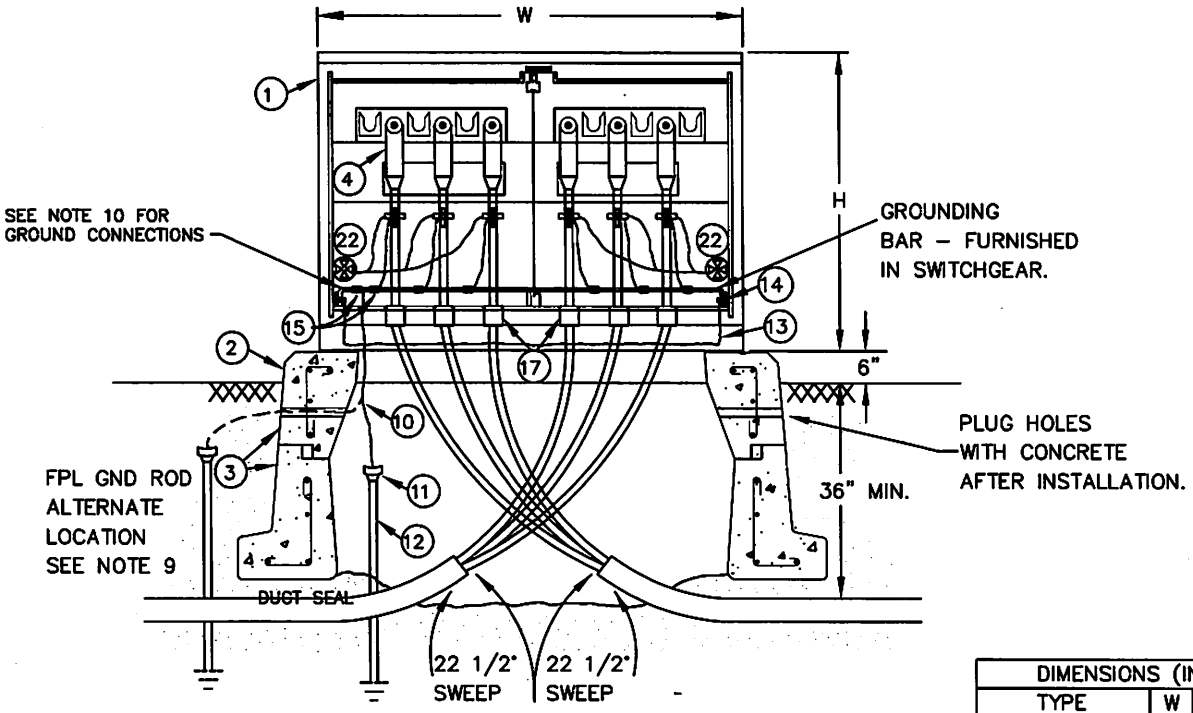

600 AMP FEEDER SIDE
SECTION A-A

DIMENSIONS (INCHES)					WEIGHT IN LBS.*
TYPE		W	D	H	
15 KV	PME-9	75	67	50	2092
	PME-11	75	73	50	2230
	PME-10	75	73	50	2292
25 KV	PME-9	84	82	56	2592
	PME-11	84	88 1/2	56	2875
	PME-10	84	88 1/2	56	2950

* ADD 150 LBS. FOR STAINLESS STEEL.

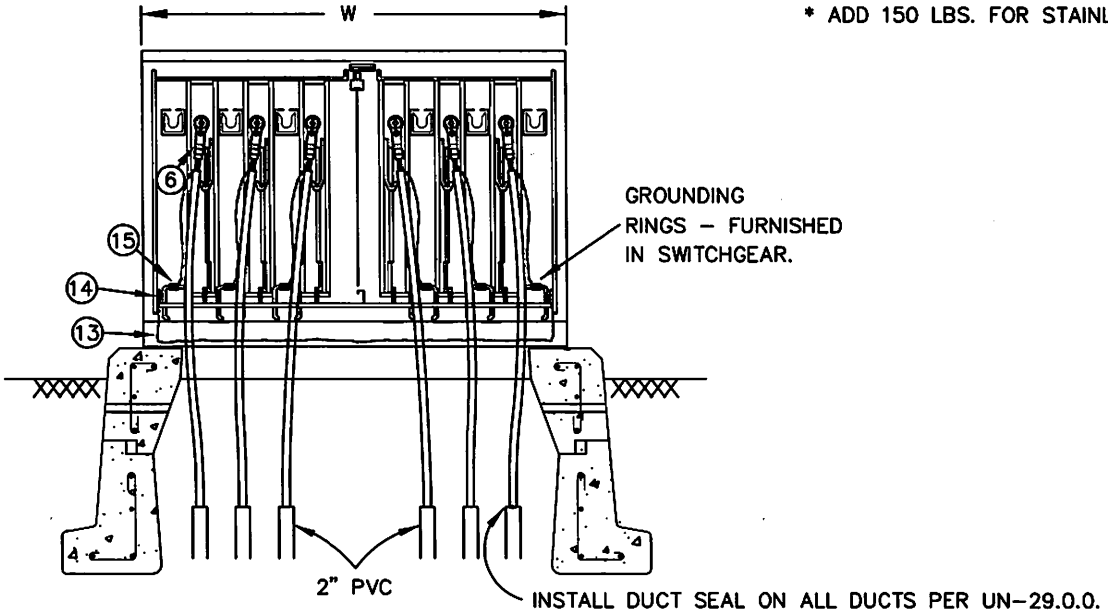

FUSE SIDE (PME-9 SHOWN)
SECTION B-B

NO.	DATE	REVISION	ORIG.	DRAWN	APPR.
4	8/1/16	UPDATE TABLE	AGR	ELS	RDH
3	10/22/09	ADD NOTE	CEA	ELS	AEL
2	7/21/01	UPDATE DRAWING ADDED PME-10 AND CHANGED SOME TEXT	RAP	JES	JJM
1	9/30/94	ADDED ARROW TO INCLUDE TOP CHAMBER SECTION ③	RJO	BAQ	RJS

12/14/2020 10:42 AM

F P L

OH & UG DISTRIBUTION SYSTEM STANDARDS

ORIGINATOR: RWS DRAWN BY: JRG

DATE: 6/30/93 APPROVED: R.J. SALESKY

DIRECTOR, DISTRIBUTION ENGINEERING AND OPERATIONS SERVICES

NO SCALE

CAM 23-0228
Exhibit 1
Page 220 of 328

TYPICAL INSTALLATION OF 15 OR 25KV S&C TYPE PME DEAD FRONT THREE PHASE PAD MOUNTED SWITCHGEAR

City of Fort Lauderdale

Bid 1452613

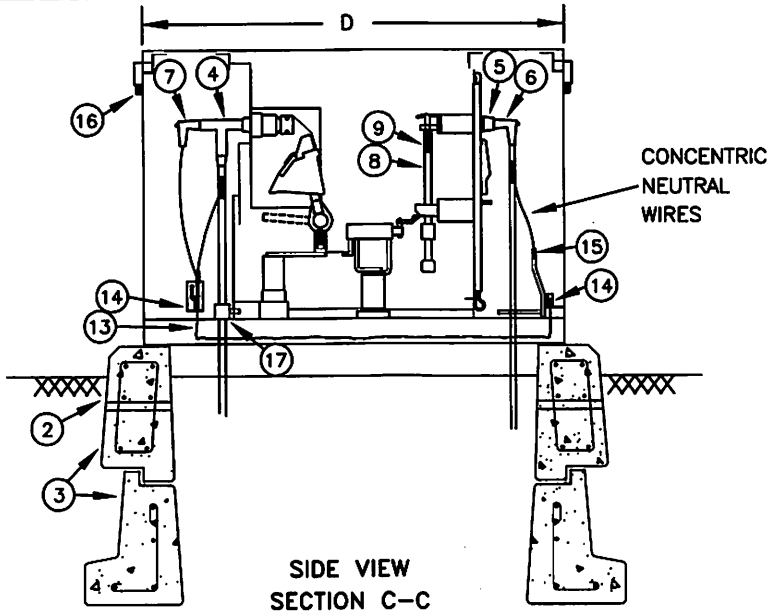

SIDE VIEW
SECTION C-C

NOTES:

1. WHEN CHANGING OUT A LIVE FRONT PAD MOUNTED SWITCH TO A DEAD FRONT PAD MOUNTED SWITCH, IT IS IMPORTANT TO ENSURE THAT THE REPLACEMENT DEAD FRONT SWITCH HAS THE SIX INCH ADAPTER BASE SPACER. THE NEW SWITCH MUST BE INSTALLED WITH THE SAME ORIENTATION AS THE OLD SWITCH IN ORDER TO ENSURE THAT THE ADAPTER BASE SPACER MATCHES THE NEW SWITCH CORRECTLY TO THE ORDER, SMALLER SIZED PAD.
   NOTE: IT IS NO LONGER REQUIRED TO CHANGE OUT THE TOP PAD PORTION OF THE CHAMBER. USE 600 AMP REPLACEMENT ELBOWS (M&S #163-502-567), AS SHOWN IN DCS UH-40.0.0 FOR THE FEEDER CABLES AND 200 AMP REPAIR ELBOWS (VARIOUS M&S NUMBERS), AS SHOWN IN UH-78.0.0 FOR THE LOOP SIDE PRIMARY CABLES.
2. CABLES MUST NOT BE IN CONTACT WITH THE EDGE OF CHAMBER FOOTING. TOP VIEW SHOWS CORRECT ROUTING FRO FEEDER CABLES THAT IS NECESSARY TO PROVIDE FOR CABLE MOVEMENT.
3. PRIMARY CABLES MUST BE ABLE TO REACH PARKING LOCATIONS.
4. ALLOW SUFFICIENT LENGTH OF CONCENTRIC NEUTRAL TO REACH GROUNDING BARS AND PERMIT FREE MOVEMENT OF ELBOWS.
5. BRASS STUDS FURNISHED WITH THE 600 AMP ELBOW KITS MUST BE INSTALLED AND TIGHTENED SECURELY (55 FT. LBS) IN THE 600 AMP BUSHINGS. THE SHORT THREADED END OF THE STUD GOES INTO THE BUSHING. SEE UH-41.0.1 AND UH-41.0.2 FOR 600 AMP ELBOW DETAILS.
6. INSTALL 800 AMP 3ø FAULT INDICATORS ON EACH SET OF FEEDERS CABLES. SEE UV-14.0.0, UV-14.0.1, UV-14.0.2.
7. LOOP SIDE PRIMARY CABLES (#1/0A) MUST GO THRU CABLE GUIDES TO AVOID CONFLICT WITH FUSE DOOR WHEN IT IS ROTATED TO OPEN.
8. CABLE MOUNTING BRACKET SHOULD BE USED ON THE FEEDER CABLE TO CORRECTLY POSITION THE CABLES FOR EASIER INSTALLATION OF THE BOLT-ON ELBOW TERMINATORS ON TO THE 600 AMP BUSHINGS. THE 600 AMP ELBOWS MUST BE INSTALLED PERFECTLY STRAIGHT (VERTICALLY AND HORIZONTALLY) ONTO THE 600 AMP BUSHINGS TO PROPERLY ENGAGE THE THREADS. THE MOUNTING BRACKETS ARE TO BE BOLTED TO THE BOTTOM FLANGE OF THE SWITCH COMPARTMENT WALL WITH 3/8" X 1/2" BOLTS THRU EXISTING HOLES PROVIDED BY THE SWITCH MANUFACTURER.
9. INSTALL GROUND RODS PER DCS G-2.0.2. MAKE CERTAIN OF CABLE LOCATIONS BEFORE DRIVING GROUND RODS. WHEN INSTALLING GROUND RODS IN ALTERNATE LOCATION, INSURE THAT BOTH THE TOP OF THE ROD AND THE #4C WIRE ARE AT LEAST 3" BELOW GRADE AND ARE COVERED. EXISTING 3/4" HOLES SHOULD BE USED IF AT LEAST 3" BELOW GRADE.
10. CONNECT BOND FROM GROUND ROD TO THE GROUNDING BAR ON THE FEEDER SIDE OF THE SWITCH CABINET OR, WHEN PROVIDED, TO THE GROUNDING PAD OF THE CABINET ON THE FEEDER SIDE.
11. APPLY CAULKING COMPOUND TO SEAM BETWEEN PAD MOUNTED SWITCH AND PAD CHAMBER.
12. UNUSED FUSE POSITIONS MUST HAVE BUSHINGS & PROTECTIVE CAPS INSTALLED. UNUSED FEEDER POSITIONS MUST HAVE 600 AMP PROTECTIVE CAPS (M&S #163-645-007). SEE MATERIAL DETAILS ON C-32.0.4
13. AFTER THE PAD MOUNTED SWITCH IS INSTALLED, THE LIFTING BRACKETS MUST BE REMOVED AND STORED INSIDE THE CABINET BY SECURING THEM TO THE GROUNDING ROD FOUND ON THE FEEDER COMPARTMENT.
14. ENSURE THAT THE "CAUTION" LABEL (M&S #548-560-104) IS INSTALLED ON EACH SIDE OF THE SWITCH HAVING ACCESS TO THE HIGH VOLTAGE SWITCH AND/OR THE HIGH VOLTAGE FUSE COMPARTMENTS PER DCS Z-35.0.0.
15. SEAL DUCTS PER UN-29.0.0.
16. DO NOT SET THE SWITCH IN LOW-LYING AREAS SUBJECT TO FLOODING. EXTRA PAD TOPS SHOULD BE ADDED, IF NEEDED, TO RAISE THE SWITCH.

NO.	DATE	REVISION	ORIG.	DRAWN	APPR.
8	1/23/19	UPDATED NOTE 12	ARR	ELS	BXN
7	2/24/11	UPDATED NOTE 9 AND ADDED NOTE 10	ARR	ELS	BXN
6	10/22/09	UPDATED NOTE 9 AND ADDED NOTE 10	CEA	ELS	AEL
5	7/31/08	UPDATED NOTE 12	CEA	ELS	JJM
4	6/27/08	ADDED NOTE 15	CEA	ELS	JJM

F P L

OH & UG DISTRIBUTION SYSTEM STANDARDS

ORIGINATOR: PMG

DRAWN BY: RAS

DATE: 9/30/94

APPROVED: J.J McEVOY

SUPERVISOR, OH/UG PRODUCT SUPPORT SERVICES

NO SCALE

CAM 23-0228
Exhibit 1
p. 124

TYPICAL INSTALLATION OF 15 OR 25KV S&C TYPE PME DEAD FRONT THREE PHASE PAD MOUNTED SWITCHGEAR

City of Fort Lauderdale Bid 13453-613

C-32.0.4

MATERIAL LIST

ITEM	DESCRIPTION		QUANTITY	M&S NO.
1	15KV SWITCHGEAR	PME-9 (2-THREE PHASE FEEDER POSITIONS AND 6 FUSE POSITIONS	1	STANDARD 270-674-007 STAINLESS STEEL 270-674-015
		PME-11 (3-THREE PHASE FEEDER POSITIONS AND 3 FUSE POSITIONS	1	STANDARD 270-679-009 STAINLESS STEEL 270-679-017
		PME-10 (4-THREE PHASE FEEDER POSITIONS AND NO FUSE POSITIONS	1	STANDARD 270-683-000 STAINLESS STEEL 270-683-050
	25KV SWITCHGEAR	PME-9 (2-THREE PHASE FEEDER POSITIONS AND 6 FUSE POSITIONS	1	STANDARD 270-672-004 STAINLESS STEEL 270-672-012
		PME-11 (3-THREE PHASE FEEDER POSITIONS AND 3 FUSE POSITIONS	1	STANDARD 270-681-003 STAINLESS STEEL 270-681-011
		PME-10 (4-THREE PHASE FEEDER POSITIONS AND NO FUSE POSITIONS	1	STANDARD 270-684-000 STAINLESS STEEL 270-684-050
2	PAD (TOP SECTION ONLY) FOR REPLACING LF WITH DF	FOR 15KV FOR 25KV	1	162-122-035 162-122-051
3	PAD & CABLE CHAMBER (TOP & BOTTOM SECT.)	FOR 15KV FOR 25KV	1	162-122-019 162-122-027
4	DEAD FRONT TERMINATOR, 1000 KCMIL AL 15KV/25KV		VARIES	T-BODY 600 AMP ELBOW 163-639-101 CABLE ADAPTER 163-639-161 SHEAR BOLT CONNECTOR 163-639-104
5	LOADBREAK BUSHING, 200 AMP	15KV 25KV	VARIES	163-861-001 163-864-001
6	ELBOW TERMINATOR, 1/0 AL	15KV 25KV	VARIES	163-587-007 163-502-001
7	PROTECTIVE CAP 200 AMP	(25KV SWITCHES ONLY)	VARIES	163-022-000
	PROTECTIVE CAP 200 AMP	(15KV SWITCHES ONLY)	VARIES	163-018-002
	ELBOW SURGE ARRESTER	(25KV SWITCHES ONLY)	VARIES	334-015-005
8	SME-4Z FUSE HOLDERS	15KV 25KV	VARIES	531-561-501 531-563-105
9	FUSES: REFILL UNITS FOR SME-4Z, SM-4Z&SML-4Z FUSE HOLDERS 15KV: 20 AMP 531-387-005; 30 AMP 531-388-001; 50 AMP 531-389-008; 65 AMP 531-395-008; 80 AMP 531-395-016; 100 AMP 531-396-004; 125 AMP 531-398-007; 150 AMP 531-402-004; 175 AMP 531-403-001; 200 AMP 531-390-006 25KV: 10 AMP 531-327-002; 15 AMP 531-328-009; 20 AMP 531-329-005; 30 AMP 531-330-003; 40 AMP 531-331-000; 50 AMP 531-332-006; 65 AMP 531-333-002; 80 AMP 531-334-009; 100 AMP 531-335-005; 125 AMP 531-337-008; 150 AMP 531-338-004; 175 AMP 531-339-001; 200 AMP 531-340-009			NOTE: THE FUSE REFILLS ARE THE SAME AS THOSE USED IN LIVEFRONT SWITCHES
10	WIRE #4C SDB		6	112-309-000
11	CONNECTOR, GROUND ROD, CLAMP TYPE		1	120-036-106
12	COPPERWELD GROUND RODS AS REQUIRED GROUND ROD COUPLINGS		VARIES	130-614-005 130-405-104
13	#4/0C CABLE, 600V		27	110-101-061
14	CONNECTOR #4/0 COPPER CABLE TO FLAT		6	120-871-005
15	CONNECTOR, COPPER TO COPPER, BOLTED	PME-9 PME-11 PME-10	19 22 25	102-800-002
16	LOCK STANDARD PADLOCK, SMALL	PME-9 PME-11 PME-10	4 5 6	546-246-011
17	CABLE MOUNTING BRACKET	PME-9 PME-11 PME-10	6 9 12	160-311-000 STANDARD (S) 160-310-000 STAINLESS STEEL (SS)
18	BOLT, 3/8" X 1 1/2" WITH NUT (FOR MOUNTING BRACKETS)		SAME AS BRACKETS	140-525-001 (SS)
19	NUT, 3/8" (FOR MOUNTING BRACKETS)		SAME AS BRACKETS	161-450-004 (S)
20	LOCKWASHER, 3/8" (FOR MOUNTING BRACKETS)		SAME AS BRACKETS	161-524-008 (S) 145-294-001 (SS)
21	BOLT, CAP SCREW, HEX HEAD 3/8"-16X1-1/2"		SAME AS BRACKETS	161-479-002 (S)
22	FAULT INDICATOR, 800 AMP, 3 PHASE	PME-9 PME-11 PME-10	2 3 4	163-297-009

REPLACEMENT PARTS FOR SWITCHES

600 AMP BUSHINGS 15KV 274-002-003
25KV 274-003-000

200 AMP BUSHING WELLS 15KV 274-002-208
25KV 274-003-204

NO.	DATE	REVISION	ORIG.	DRAWN	APPR.
6	1/23/19	UPDATE TABLE	ARR	ELS	RDH
5	3/31/11	UPDATE NOTES	ARR	ELS	BXN
4	3/1/2011	UPDATE NOTES	ARR	ELS	BXN
3	8/12/2010 10:42 AM	UPDATE NOTE 17	GAP	ELS	BXN

F P L

OH & UG DISTRIBUTION SYSTEM STANDARDS

ORIGINATOR: PMG

DRAWN BY: RAS

DATE: 9/30/94

APPROVED: J.J McEVOY

SUPERVISOR, OH/UG PRODUCT SUPPORT SERVICES

CAM 23-0228

NO SCALE

Exhibit 1 P. 125

UX-122.0.0 CONCRETE FOUNDATION FOR DEADFRONT THREE PHASE PAD MOUNTED SWITCHES 15 AND 25KV

UX-122.0.0

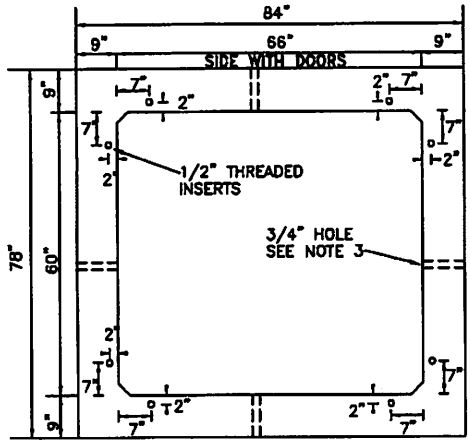

SIDE WITH DOORS

15KV PAD TOP SECTION

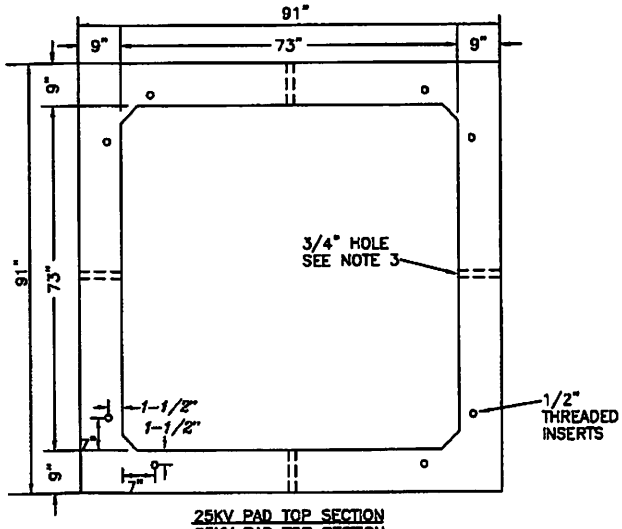

25KV PAD TOP SECTION

25KV PAD TOP SECTION

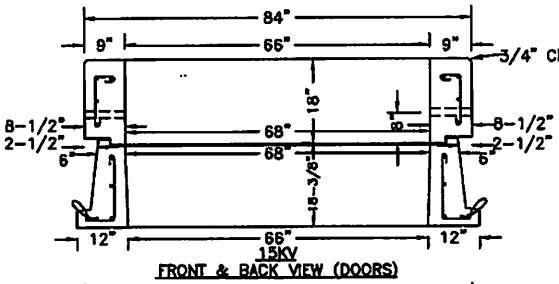

15KV FRONT & BACK VIEW (DOORS)

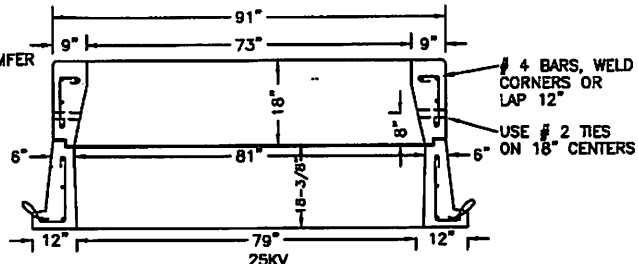

25KV FRONT & BACK VIEW (DOORS)

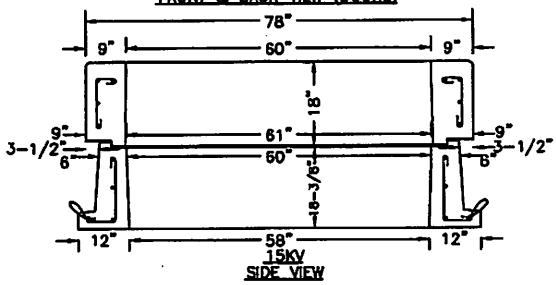

15KV SIDE VIEW

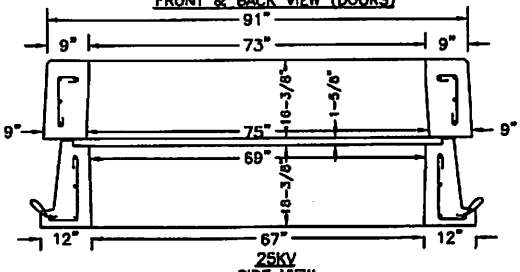

25KV SIDE VIEW

NOTES
1. INSIDE EDGE OF INSERT TO BE MINIMUM OF 2" FROM EDGE OF CONCRETE.
2. LIFTING RINGS TO BE GALV. WIRE ATTACHED TO #4 REINFORCING ROD AND HAVE ADEQUATE LIFTING STRENGTH. (TOTAL 4)
3. 3/4" ø HOLE FOR LIFTING BOLT TO EXTEND THROUGH THE WALL. SUPPLIED WITH SEALING CAP PLUG. (TOTAL 4)
4. TOP SURFACE SHALL BE SMOOTH PLANE. THE MAXIMUM ALLOWABLE VARIATION IN HEIGHT BETWEEN ANY TWO POINTS ON THIS SURFACE IS 0.125 INCHES.
5. SUPERIOR THREADED INSERTS, 1/2" WITH PLUG, ELECTRO-GALV., 8 REQUIRED. (SEE DETAIL A).
6. #2 AND #4 REINFORCING RODS.
7. 4000 LBS. TEST CONCRETE.
8. MANUFACTURERS IDENTIFICATION, YEAR OF MANUFACTURE, AND FPL CO. M&S NUMBER TO BE CAST IN TOP SURFACE OF PAD NEAR CENTER OF PAD AND IN FOOTING OF CHAMBER NEAR CENTER OF FOOTING. (THIS REQUIRED WHEN PRECAST).

APPROXIMATE WEIGHT (POUNDS)	
15KV PAD	3500
15KV CHAMBER	3250
25KV PAD	3900
25KV CHAMBER	4140

DEADFRONT PAD AND CABLE CHAMBER	
DESCRIPTION	M&S NUMBER
15KV TOP PAD ONLY	162-12203-5
15KV TOP PAD AND BOTTOM CHAMBER	162-12201-9
25KV TOP PAD ONLY	162-12205-1
25KV TOP PAD AND BOTTOM CHAMBER	162-12202-7

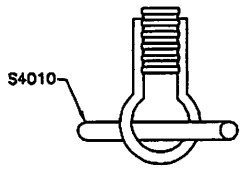

DETAIL "A"

FPL

OH & UG DISTRIBUTION SYSTEM STANDARDS

NO.	DATE	REVISION	ORIG.	DRAWN	APPR.
3	10/19/00	*UPDATE DIMENSIONS*	RAP	JES	JJM
2	10/10/96	UPDATE FOUNDATION	BS	BILL	BS

ORIGINATOR: SMS DRAWN BY: BILL

DATE: APPROVED: J.J. MCEVOY
SUPERVISOR, OH/UG PRODUCT SUPPORT SERVICES

NO SCALE

UX-113

CONCRETE FOUNDATION FOR S&C 30 PADMOUNTED SWITCH

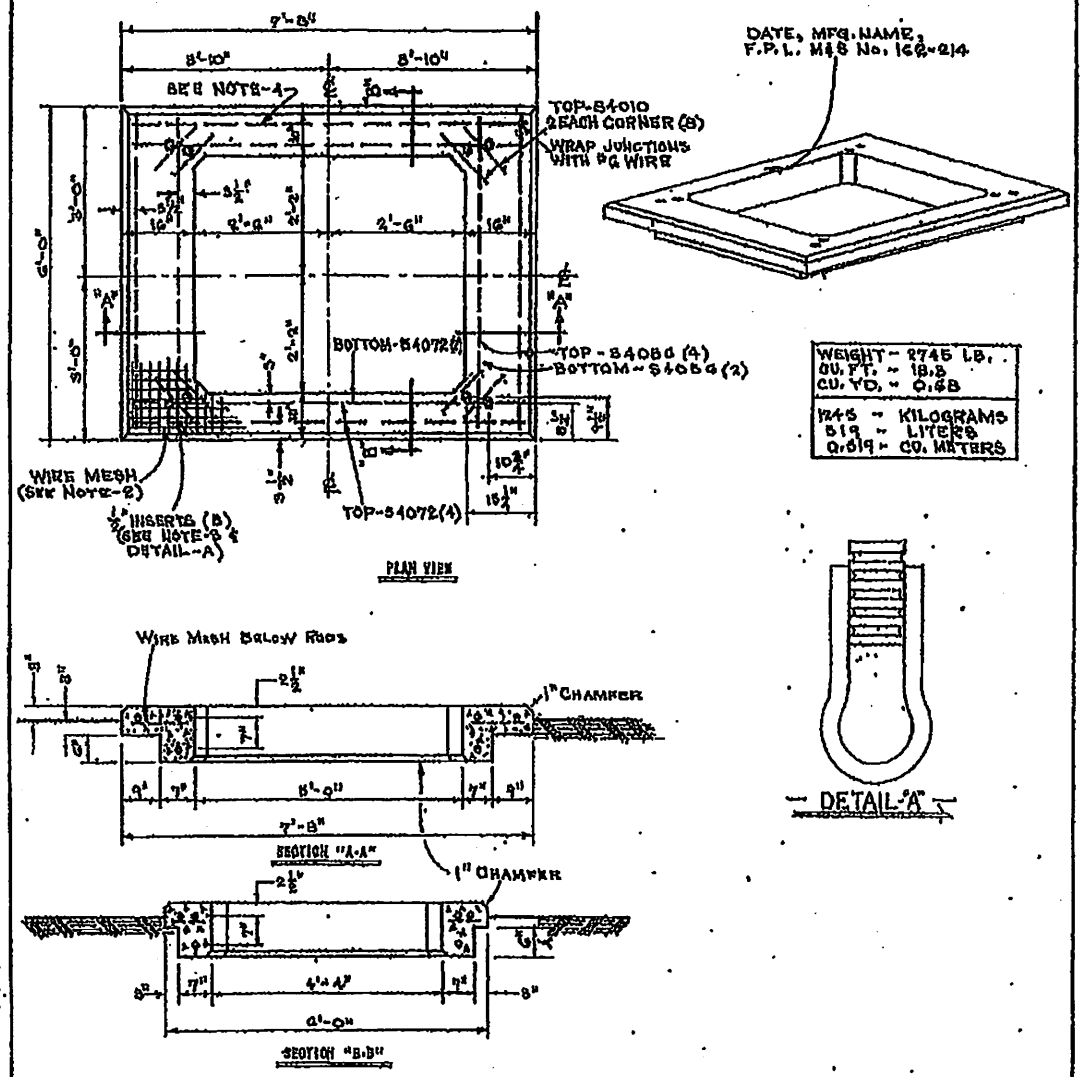

1. Top surface to be smooth and level. Surface irregularities are not acceptable.
2. 4 x 4 No.4 Welded Wire Mesh Reinforcing to stop 2" from Sides and Opening of Foundation.
3. Superior Threaded Inserts, 1/2" with Plug, Electro-Galv., 4 Required. (See Detail A)
4. #4 Reinforcing Rod as shown.
5. 4000 Lb. Test Concrete.
6. For use with S & C Switches, M & S Nos. 270-663, 270-664, 270-665 & 270-660.
7. Manufacturers Identification, Year of Manufacture, and FPL Co. M & S Number to be cast in top surface of pad near center of pad. (This required when present.)

NO.	DATE	REVISION	BY	CH	COR	APP
1	2-8-72	CORRECTED DIMENSION				

STANDARDS
UNDERGROUND DISTRIBUTION SYSTEM
FLORIDA POWER & LIGHT COMPANY
DATE 12-28-71 NO SCALE

****** NOTICE******

- CALL SUNSHINE 1-800-432-4770 48HOURS BEFORE YOU DIG FOR UNDERGROUND LOCATIONS.
- NOTIFY FPL REP. FOR INSPECTION OF TRENCH DEPTH & PVC INSTALLATION PRIOR TO BACKFILLING TRENCH.

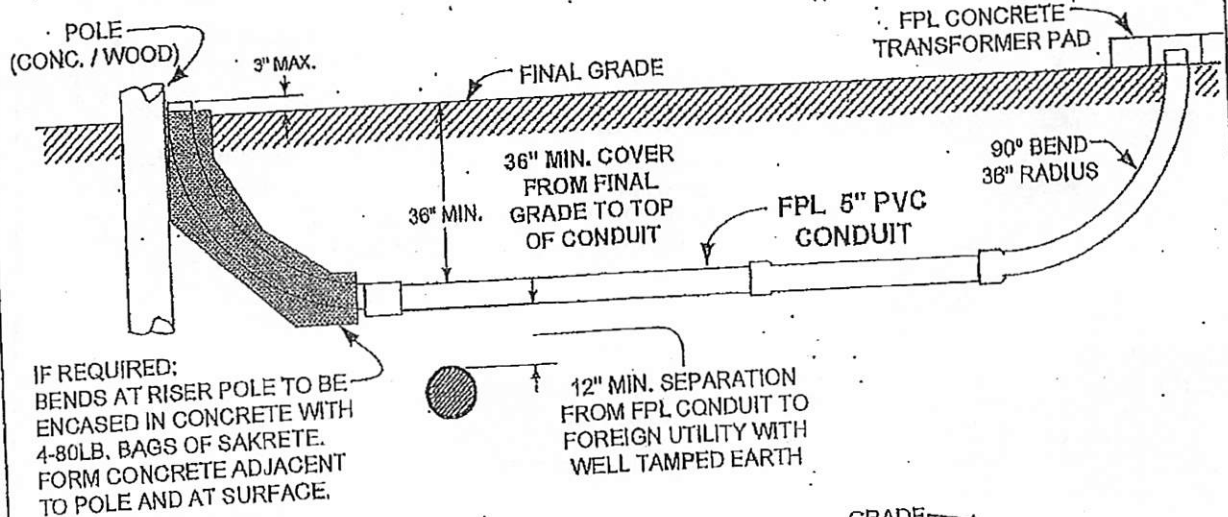

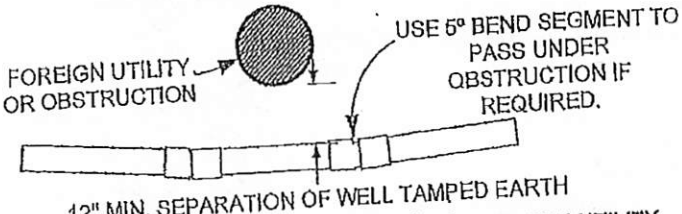

FPL CONDUIT CROSSING UNDER A FOREIGN UTILITY

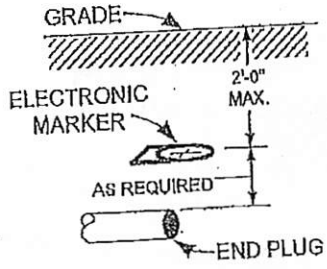

DUCT END MARKING
(IF REQUIRED)

NOTES:

- BACK-FILL WITHIN 4" OF THE CONDUIT TO BE FREE OF MATERIAL THAT MAY DAMAGE CONDUIT SYSTEM (BOARDS, ROCKS LARGER THAN 1" IN DIAMETER, DEBRIS, ETC.)
- IF COMPACTION OF TRENCH ROUTE IS REQUIRED FOR PAVING, ETC. BEGIN MACHINE COMPACTION 6" MINIMUM ABOVE CONDUIT.
- WHERE 36" OF COVER CANNOT BE MAINTAINED, 30" OF COVER WILL BE ALLOWED WITH 3" OF CONCRETE ENCASEMENT AROUND THE CONDUIT. (N.E.S.C. RULE FOR PRIMARY VOLTAGES)
- INSTALL A CONTINUOUS LENGTH OF PULL STRING IN ALL CONDUIT RUNS.

MATERIAL LIST 5" PVC SCH 40 CONDUIT	
20' LENGTH (BELLED END)	164-33800-1
90° BEND 36" RADIUS	164-25250-6
90° BEND 48" RADIUS	164-25200-9
45° BEND 48" RADIUS	164-61400-8
5° BEND SEGMENT	164-56100-1
22.5° SWEEP 12'-6" RADIUS	164-13000-1
STRAIGHT COUPLING	164-44900-7
REPAIR SLEEVE 6' LONG	164-47630-0
END PLUG	164-53500-1
ELECTRONIC MARKER	590-61601-5

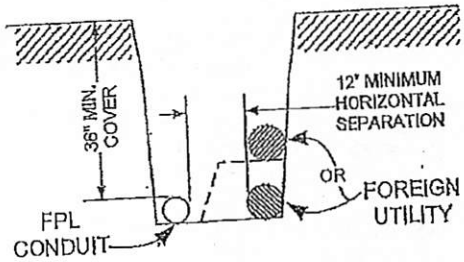

INSTALLATION OF FPL CONDUIT
PARALLEL WITH - OR - IN A SHARED TRENCH
WITH A FOREIGN UTILITY.

FPL SUPPLIED 5" PVC CONDUIT
TYPICAL CUSTOMER INSTALLATION DETAILS
(PORTIONS OF UN-6, UN-15,CONC. & PAD DETAILS)

****** NOTICE******

- CALL SUNSHINE 1-800-432-4770 48HOURS BEFORE YOU DIG FOR UNDERGROUND LOCATIONS.
- NOTIFY FPL REP. FOR INSPECTION OF TRENCH DEPTH & PVC INSTALLATION PRIOR TO BACKFILLING TRENCH.

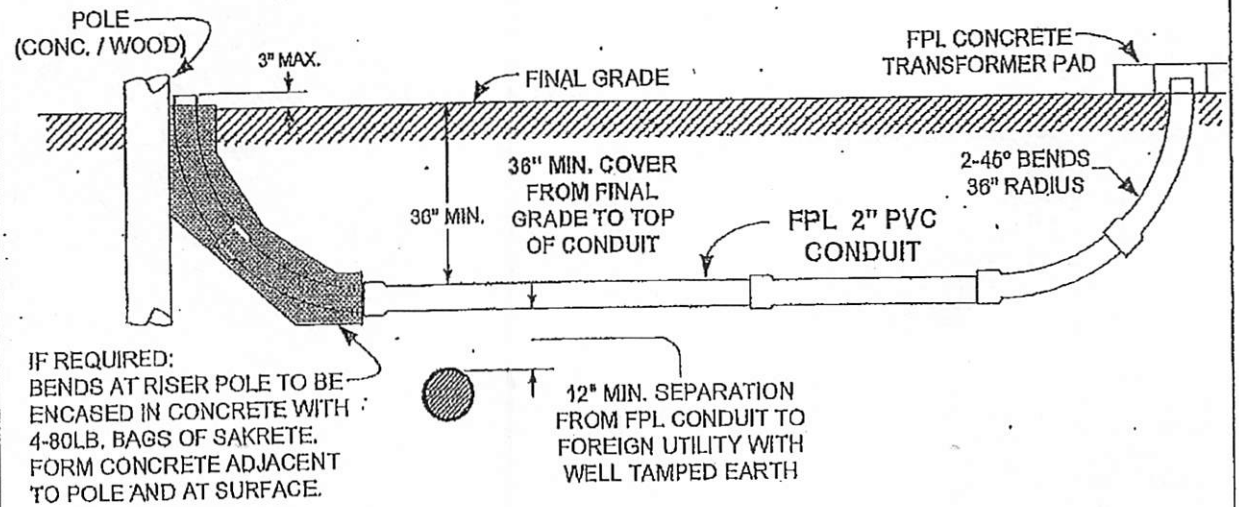

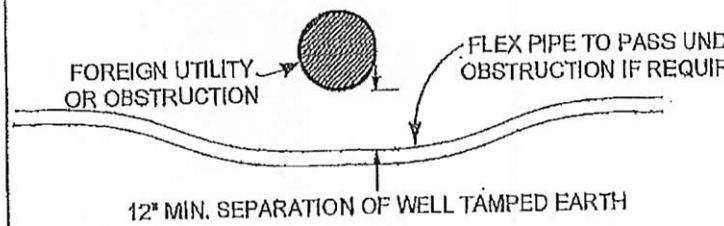

FPL CONDUIT CROSSING UNDER A FOREIGN UTILITY

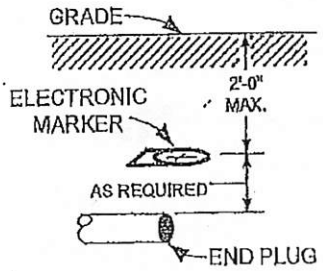

DUCT END MARKING
(IF REQUIRED)

NOTES:

- BACK-FILL WITHIN 4" OF THE CONDUIT TO BE FREE OF MATERIAL THAT MAY DAMAGE CONDUIT SYSTEM (BOARDS, ROCKS LARGER THAN 1" IN DIAMETER, DEBRIS, ETC.)
- IF COMPACTION OF TRENCH ROUTE IS REQUIRED FOR PAVING, ETC. BEGIN MACHINE COMPACTION 6" MINIMUM ABOVE CONDUIT.
- WHERE 36" OF COVER CANNOT BE MAINTAINED, 30" OF COVER WILL BE ALLOWED WITH 3" OF CONCRETE ENCASEMENT AROUND THE CONDUIT. (N.E.S.C. RULE FOR PRIMARY VOLTAGES)
- INSTALL A CONTINUOUS LENGTH OF PULL STRING. IN ALL CONDUIT RUNS.

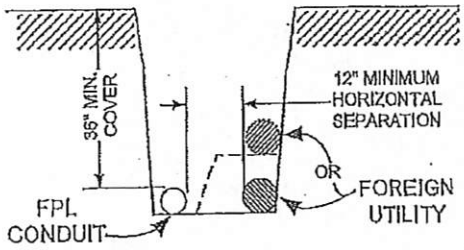

INSTALLATION OF FPL CONDUIT
PARALLEL WITH - OR - IN A SHARED TRENCH
WITH A FOREIGN UTILITY.

MATERIAL LIST 2" PVC SCH 40 CONDUIT	
20' LENGTH (BELLED END)	164-33100-6
90° BEND 24" RADIUS	164-23800-6
45° BEND 36" RADIUS	164-23945-2
45° BEND 24" RADIUS	164-23900-2
STRAIGHT COUPLING	164-47000-6
REPAIR SLEEVE 4" LONG	164-47520-2
END PLUG	164-54800-5
ELECTRONIC MARKER	590-61601-5

FPL SUPPLIED 2" PVC CONDUIT
TYPICAL CUSTOMER INSTALLATION DETAILS
(PORTIONS OF UN-6, UN-15, CONC.& PAD DETAILS)

L-17.0.7 SHEAR BOLT SECONDARY CONNECTORS IN HANDHOLE FOR CONNECTING 2 TO 4 SERVICES

City of Fort Lauderdale
BID 12453617

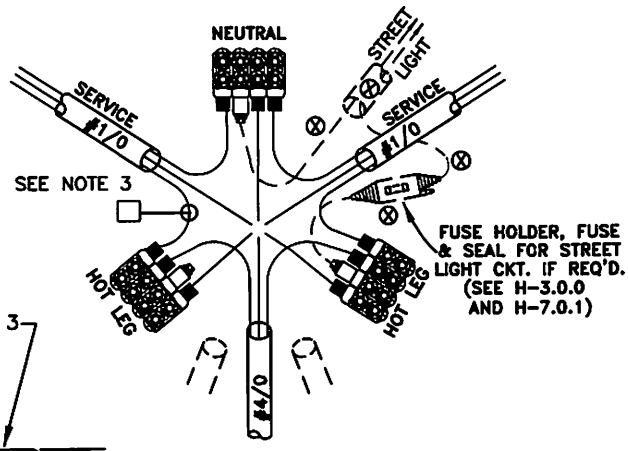

4 PORT SHEAR BOLT CONNECTOR (PIRANHA) CONNECTION DIAGRAM FOR 1 - 2 SERVICE M&S #163-066-008

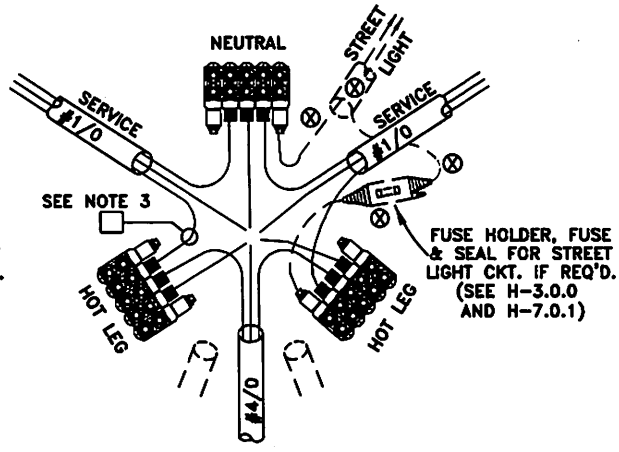

5 PORT SHEAR BOLT CONNECTOR (PIRANHA) CONNECTION DIAGRAM FOR 3 - 4 SERVICE M&S #163-066-009

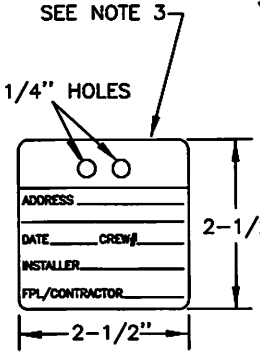

M&S # 549-378-009

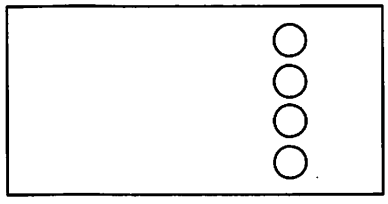

TOP VIEW OF CONDUIT LAYOUT IN HANDHOLE (SEE NOTE 5)

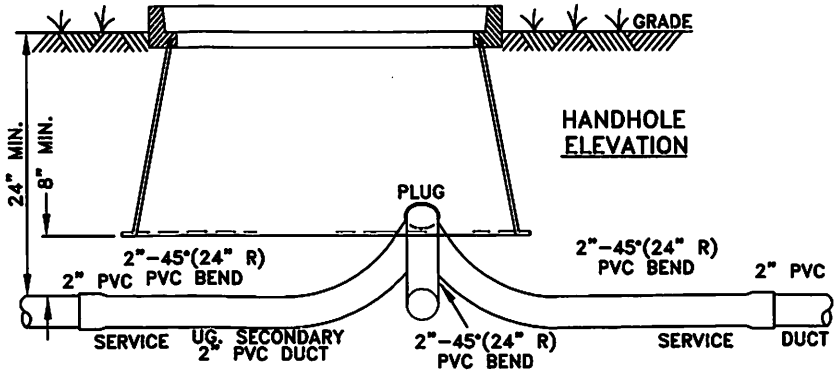

TABLE 1

NOTES:

1. FOR ONE SERVICE, SEE UC-5.0.0, UC-6.0.0 AND UC-6.0.2.
2. ONLY INSULATED CONDUCTORS MAY BE CONNECTED TO SHEAR BOLT CONNECTORS.
3. INSTALL TAG M&S #549-378-009 EVERYTIME A CONNECTOR IS INSTALLED OR REPLACED.
4. FOR ADDITIONAL INFORMATION REFER TO L-17.0.9, L-17.0.10 AND L-17.0.11.
5. FOR 24" AND 30" HANDHOLES INSTALL ALL CONDUITS AT ONE END OF THE HANDHOLE. BOTH THE 24" AND 30" HANDHOLES COME WITH A SPECIAL STENCIL "TO PLACE ALL CONDUITS AT THE END OF THE HANDHOLES". THIS ALLOWS THE CONDUCTOR TO BE LIFTED OUT OF THE HANDHOLE AND WORK THE CONNECTORS ABOVE GROUND.
6. WHEN FIELD CONDITIONS DICTATE THE USE OF FIVE OR MORE CABLES, IT MAY BE BEST TO CONSIDER THE USE OF THE 30" HANDHOLE, AS THIS WILL ALLOW ADDITIONAL ROOM TO WORK THE CONNECTIONS.
7. A 24" HEAVY DUTY HANDHOLE (M&S #162-120-500) IS ALSO AVAILABLE FOR USE IN SIDEWALKS, DRIVEWAYS AND PARKING LOTS. NOT FOR USE IN ROADWAYS OR AREAS OF DELIBERATE TRAFFIC.

TABLE 1

CABLES	CONNECTORS	HANDHOLE
1/0 SECONDARY, #6 DUPLEX AND 12CU FOR STREET LIGHT	163-066-008 (4 PORT)	162-304-001 (15.5"X10.5"X18" DEEP)
1/0 SECONDARY, AND 1/0 SERVICES, UP TO 4 SERVICES	163-066-009 (5 PORT)	162-120-008 (24"X13"X18" DEEP)
4/0 SECONDARY, AND 1 OR 2 SERVICES	163-066-008 (4 PORT)	162-120-008 (24"X13"X18" DEEP)
4/0 SECONDARY, AND 3 OR 4 SERVICES	163-066-009 (5 PORT)	162-120-008 (24"X13"X18" DEEP)
250 MCM TO 350 MCM	163-066-010 (5 PORT)	162-100-007 (30"X17"X18" DEEP)
350 MCM TO 500 MCM (NO MORE THAN 4 SETS)	163-066-011 (5 PORT)	162-100-007 (30"X17"X18" DEEP)
400 MCM TO 500 MCM (NO MORE THAN 4 SETS)	163-017-502 (6 PORT)	162-100-007 (30"X17"X18" DEEP)
400 MCM TO 500 MCM (NO MORE THAN 5 SETS)	163-017-502 (6 PORT)	162-121-004 (48"X30"X36" DEEP)
600 MCM TO 750 MCM	163-017-502 (6 PORT)	162-121-004 (48"X30"X36" DEEP)

FOR TRAFFIC LOADING USE HANDHOLE	162-122-892 (32"X50"X36" DEEP)
	162-122-893 (17"X30"X18" DEEP)

NO.	DATE	REVISION	ORIG.	DRAWN	APPR.
22	12/7/17	UPDATE TABLE	ARR	ELS	RDH
21	11/3/17	UPDATE TABLE	ARR	ELS	RDH
20	10/24/16	ADD NOTE 7	ARR	ELS	RDH
19	9/27/16	UPDATE TABLE AND DRAWING	ARR	ELS	RDH
18	5/12/16	UPDATE DRAWING AND NOTES	ARR	ELS	RDH
17	12/14/2010	UPDATE TABLE	ARR	ELS	RDH

FPL

OH & UG DISTRIBUTION SYSTEM STANDARDS

ORIGINATOR: SMS DRAWN BY: RAS

DATE: 8/09/96 APPROVED: J.R. "PEPE" DIAZ RELIABILITY ENGINEERING MANAGER

NO SCALE

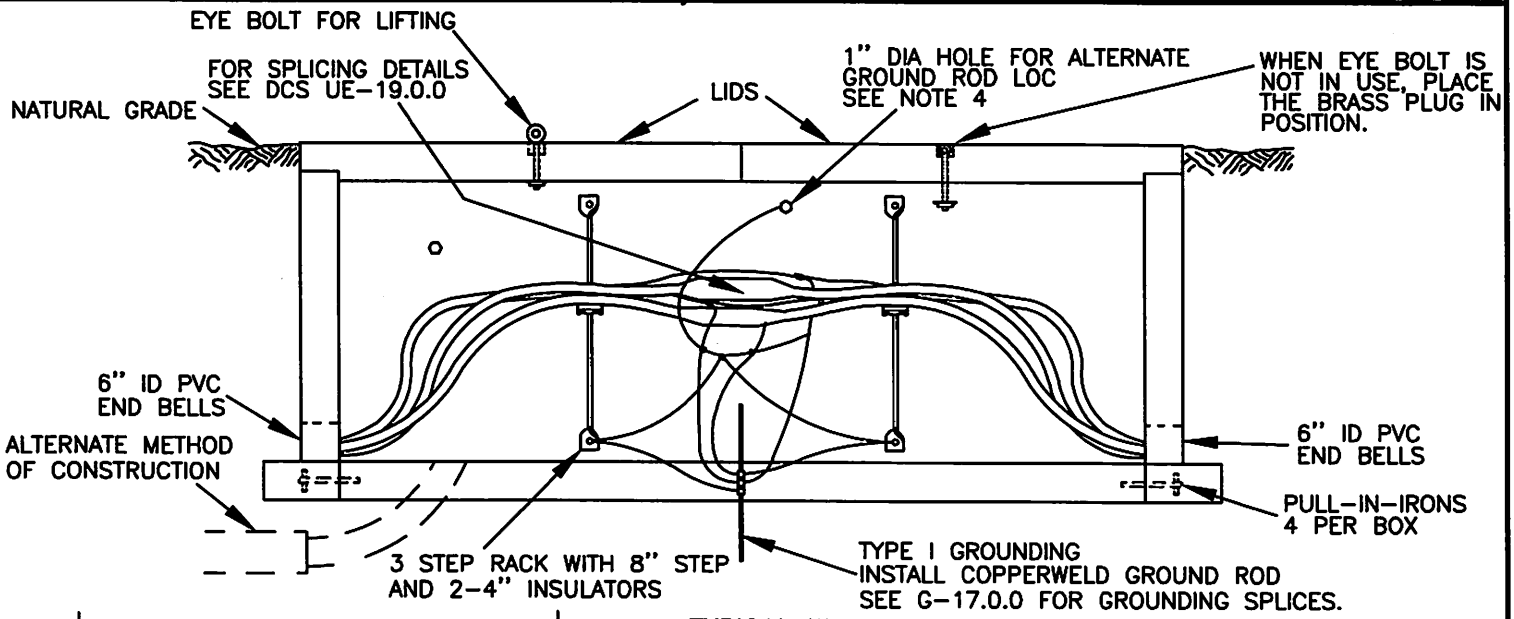

TYPICAL WALL SECTION

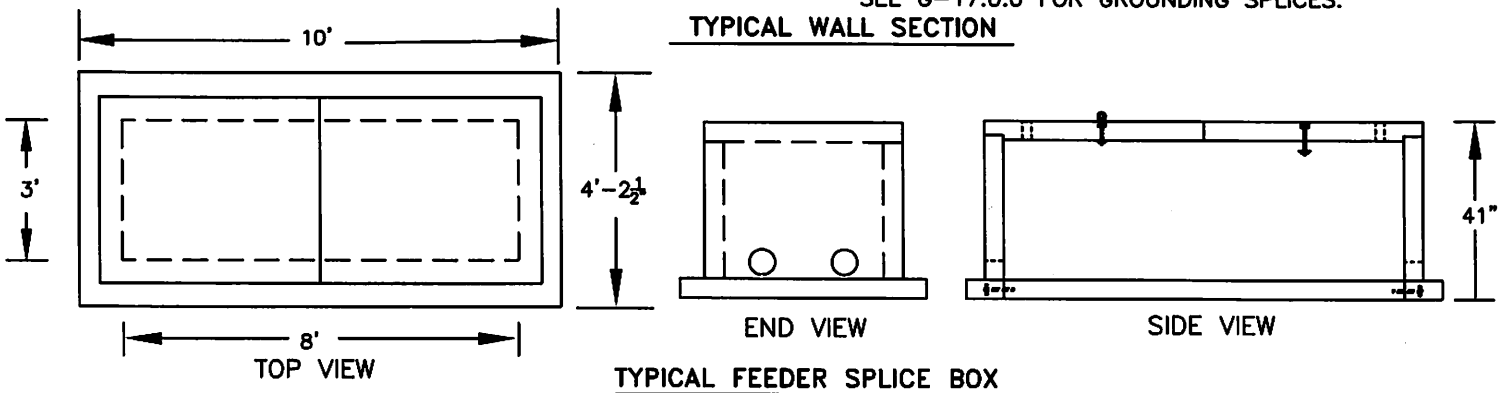

TYPICAL FEEDER SPLICE BOX

M&S NUMBER	DESCRIPTION
162-240-003	CONCRETE FEEDER SPLICE BOX & LIDS. (SEE NOTE 5)
162-241-000	CONCRETE FEEDER SPLICE BOX & LIDS COMES WITH SPECIAL BRUSHED SIDEWALK FINISH LIDS AND FLUSH INSERTS SUITABLE FOR PEDESTRIAN TRAFFIC. (SEE NOTE 5)
162-242-203	POLYMER CONCRETE FEEDER SPLICE BOX. TO BE INSTALLED IN AREAS NOT SUBJECT TO ANY VEHICULAR TRAFFIC SUCH AS STREETS, PARKING LOTS, OR DRIVEWAYS.

NOTES:
1. LEAVE SUFFICIENT EXPOSED GROUND ROD TO INSTALL 6 EACH #4/0-#2 CONNECTIONS M&S #120-118-005.
2. GROUND ALL SPICES PER DISTRIBUTION STANDARD G-17.0.0.
3. GROUND CABLE RACKS.
4. EACH SPLICE BOX IS SUPPLIED WITH 2-1" DIA HOLE FOR ALTERNATE GROUND ROD LOCATION. MAKE ALL GROUNDING CONNECTIONS INSIDE THE BOX. RUN SUFFICIENT AMOUNT OF 4/0 TO MAKE CONNECTION TO ALT. GROUND ROD LOCATION. RESEAL 1" DIA HOLE WITH AQUASEAL.
5. REFER TO UX-233.0.1 FOR DRIVEWAY LOADING SPLICE BOXES (H20 RATED), M&S #162-240-003 AND 162-241-000. (H20 RATED = 32,000LBS).
6. WEIGHT OF SPLICE BOX (W/O LIDS) = 6700 LBS. DIMENSIONS ARE 10' X 4'-2.5" X 41" DEEP.
7. WEIGHT OF EACH LID = 1400 LBS. TWO LIDS REQUIRED. M&S # FOR LID ONLY 162-240-011.
8. URD FEEDER CABLE SPLICES MUST BE BONDED TO DRIVEN GROUNDS.
9. REFER TO UE-19.0.0 FOR SPLICE ASSEMBLY. A WATER TIGHT SEAL MUST BE MADE WHERE INSULATED.
10. CONDUCTORS CONNECT TO SYSTEM NEUTRAL. SEE G-17.0.0.
11. THE MAXIMUM PERMISSIBLE IMPENDENCE TO SYSTEM NEUTRAL FOR A DRIVEN GROUND IS 25 OHMS.
12. AS SHOWN ABOVE, THE PVC MAY ENTER UNDERNEATH THE SPLICE BOX BY USING A 45 DEGREE SWEEP. SEAL CONDUIT WITH DUCT SEAL.
13. IN AREAS SUBJECT TO WATER INTRUSION, INSTALL A SUFFICIENT AMOUNT OF PEAROCK 1/4"-3/4" SIZE ROCK TO ALLOW FOR THE PERCOLATION OF THE WATER.
14. IF FEEDER SPLICE BOX IS TO BE INSTALLED IN A SIDEWALK, A SEPARATION WILL BE NEEDED BETWEEN THE CONCRETE AND THE LIDS. THE D.O.T. INDEX 310 SPECIFIES THE USE OF A 1/2" EXPANSION JOINT (PREFORMED JOINT FILLER) FOR THIS SEPARATION. ALSO CONSULT YOUR LOCAL MUNICIPALITY FOR ANY ADDITIONAL REQUIREMENTS.
15. THE MAXIMUM SEPARATION BETWEEN FEEDER SPLICE BOXES IS 950', THIS IS TO ALLOW FOR PROPER CABLE PULLING TENSIONS.
16. UX-233.0.1 AND UX-233.0.3 FOR MORE DETAIL.
17. WHEN SETTING A PAD/MANHOLE OR FEEDER SPLICE BOX, THE AREA MUST BE LEVELED WITHIN 1 INCH IN 8 FEET IN ALL DIRECTIONS, AND THOROUGHLY COMPACTED WITH A VIBRATORY PLATE COMPACTOR. THIS STEP WOULD PROVIDE A SMOOTH AND LEVEL SURFACE.
18. FEEDER CABLES ARE NOT TO BE LOOPED AROUND THE ENDS OF THE BOX, THIS WILL EXCEED THE BEND RADIUS OF THE CABLES CREATING A POTENTIAL FAILURE

NO.	DATE	REVISION	ORIG.	DRAWN	APPR.
8	8/26/19	ADD NOTE 18	ARR	ELS	RDH
7	8/6/18	ADD NOTE 17	ARR	ELS	RDH
6	6/12/17	UPDATE DRAWING AND NOTES	ARR	ELS	RDH
5	5/19/17	ADD NOTE 15	ARR	ELS	RDH

FPL
OH & UG DISTRIBUTION SYSTEM STANDARDS
ORIGINATOR: RAP
DRAWN BY: J.SHOUP
DATE: 8/27/99
APPROVED: J.J McEVOY
SUPERVISOR, OH/UG PRODUCT SUPPORT SERVICES
NO SCALE

J-4.0.0

PAD-MOUNTED CAPACITOR BANK INSTALLATIONS

J-4.0.0

WE HAVE TWO STANDARD 1200 KVAR PAD-MOUNTED, CAPACITOR BANKS. THEY ARE PRESENTLY OPERATED AS FIXED BANKS, BUT MAY BE REMOTELY SWITCHED IN THE FUTURE.

223-388-508 13KV. PAD-MOUNTED, DEADFRONT, STAINLESS STEEL ENCLOSURE, 3 PHASE, 1200 KVAR CAPACITOR BANK TO INCLUDE: A POTENTIAL TRANSFORMER, VACCUMM SWITCHES, DOUBLE BUSHING CAPACITOR CANS, (7.62KV, 400 KVAR), X-LIMITER FUSES (80A), BUSHING WELLS (200A), PARKING STANDS, METER SOCKET AND CONTROL WIRING FOR RADIO RECEIVER.

223-388-001 23KV. PAD-MOUNTED, DEADFRONT, STAINLESS STEEL ENCLOSURE, 3 PHASE, 1200 KVAR CAPACITOR BANK TO INCLUDE: A POTENTIAL TRANSFORMER, VACUUM SWITCHES, DOUBLE BUSHING CAPACITOR CANS, (13.2 KVAR), 400 KVAR), X-LIMITER FUSES (50A), BUSHING WELLS (200A), PARKING STANDS, METER SOCKET AND CONTROL WIRING FOR RADIO RECEIVER.

EITHER UNIT CAN MOUNT ON FOUNDATION UX-108 (M&S 162-251-005). THE FOUNDATION, ARRESTERS, AND ROTATABLE BUSHINGS ARE INCLUDED IN THE FOLLOWING MECA UNIT.

EITHER UNIT CAN BE USED IN SALT-SPRAY AREAS.

A	B	C	D	E	F	G	H
C			1200	T	E	-	

J

DETAILS OF INSTALLATION:

1. THE UNITS ARE TO BE INSTALLED NO MORE THAN 100FT FROM A DEAD-FRONT, PADMOUNTED SWITCH CABINET, ONLY. LIVE FRONT CABINETS SHOULD BE CHANGED OUT FOR THIS APPLICATION.
2. THE UNIT WILL BE SERVED WITH 1/0, 25KV CABLE FROM THE BACK (200-AMP INTERFACE) OF THE ARRESTERS PRESENTLY FOUND IN THE CABINET, BUT THESE ARRESTERS MAY BE RE-USED IN THE CAP BANK UNIT.
3. INSTALL ROTATABLE, FEED-THRU BUSHINGS ON THE 23KV URD CAPACITOR BANK (ONE SIDE FOR THE ARRESTER ELBOW AND ONE SIDE FOR THE PRIMARY ELBOW COMING FROM THE PADMOUNTED SWITCH CABINET). NOTE: THIS ONLY APPLIES TO 23KV UNITS, SINCE IT IS TYPICALLY, NOT NECESSARY, TO PROTECT 15KV URD SYSTEMS, WITH ELBOW ARRESTERS.
4. THE PAD-MOUNTED BANK SITS ON A PRE-CAST CONCRETE PAD. REFER TO UX-108.
5. THE BANK IS PROTECTED, BY CURRENT-LIMITING FUSES, AND HAS A POTENTIAL TRANSFORMER (INTERNALLY PROTECTED AND HOOKED UP TO THE LINE SIDE OF FUSES), WHICH POWERS THE VACUUM SWITCHES.
6. FAULT INDICATORS SHOULD BE INSTALLED AT BOTH THE PADMOUNTED SWITCH CABINET AND THE CAPACITOR CABINET TO DISTINGUISH BETWEEN CAN OR CABLE FAILURE.
7. INSTALL SIGNS SHOWING "INSTRUCTIONS FOR SWITCHING" (M&S 548-223-000) AND "REPLACEMENT COMPONENTS" (M&S 548-223-100) ON INSIDE OF CABINET DOOR.

NOTES:
1. PADMOUNTED CAPACITOR BANKS REQUIRE 8' MINIMUM CLEARANCE IN FRONT AND REAR DOORS.

F P L
OH & UG DISTRIBUTION SYSTEM STANDARDS

4	9/17/13	UPDATE DRAWING (TEXT)	JJR	ELS	WM
3	4/5/13	UPDATE DRAWING (TEXT)	JJR	ELS	WM
2	5/21/12	UPDATE DRAWING (TEXT)	LFV	ELS	WM
1	12/04/04	UPDATE DRAWING (TEXT)	LFV	ELS	JJM

ORIGINATOR: LFV DRAWN BY: J. SHOUP

DATE: 07/25/01 APPROVED: J.J. MCEVOY SUPERVISOR, OH/UG PRODUCT

CAM 23-0228 Exhibit 1 NO. SCALE

J-4.0.1

CAPACITOR BANK SWITCHING INSTRUCTIONS

J-4.0.1

THE FOLLOWING INSTRUCTIONS ARE TO BE PLACED INSIDE ALL PAD-MOUNTED CAPACITOR BANKS:

INSTRUCTIONS FRO SWITCHING PADMOUNTED CAPACITOR BANKS:

TO ENERGIZE THE BANK, FOLLOW THESE STEPS:

1. TURN RC OFF AT FEEDER BREAKER.
2. VERIFY THAT ELBOWS ARE PARKED AT BOTH FEEDER PAD-MOUNTED SWITCH CABINET AND CAPACITOR BANK CABINET.
3. VERIFY ALL GROUNDS/SHORTING STRAPS HAVE BEEN REMOVED FROM THE CAPACITOR CANS.
4. VERIFY THAT SEMAPHORES IN VACUUM SWITCHES ARE IN THE "OPEN" POSITION.
5. VERIFY THAT CURRENT LIMITING FUSES ARE INSTALLED, WITH THE BLOWN INDICATOR FACING DOWN.
6. PLACE REMS CONTROLLER SWITCH IN THE LOCAL POSITION.
7. CLOSE IN ELBOWS AT CAPACITOR CABINET.
8. CLOSE IN ELBOWS AT SWITCH CABINET.
9. PRESS THE RED (CLOSE) BUTTON ON THE REMS OR USE THE REMOTE HAND OPERATOR TO CLOSE VACUUM SWITCHES.
10. TURN RC ON AT FEEDER BREAKER.

TO SWITCH OUT AND ISOLATE THE BANK, FOLLOW THESE STEPS:

1. VERIFY THAT REMS CONTROLLER'S TOGGLE SWITCH IS PLACED IN THE POSITION.
2. PRESS GREEN TRIP BUTTON ON REMS RECEIVER BOX.
3. VERIFY THAT SEMAPHORES IN VACUUM SWITCHES SHOW OPEN.
4. ALLOW AT LEAST FIVE MINUTES THEN TEST FOR VOLTAGE OR CURRENT AT THE CAPACITOR CELLS.
5. OPEN, PARK, AND CAP ELBOWS AT FEEDER PAD-MOUNTED SWITCH CABINET.
6. OPEN, PARK, AND CAP ELBOWS AT CAPACITOR CABINET.
7. ATTACH ALL NECESSARY GROUNDS.

NOTE:
THE CAPACITOR CANS ARE TO BE ENERGIZED OR DE-ENERGIZED WITH THE VACUUM SWITCHES, ONLY.
DO NOT USE THE LOAD-BREAK ELBOWS OR THE CURRENT-LIMITING FUSES FOR THE ACTIVITY.

J

PAD-MOUNTED CAPACITOR BANK-REPLACEMENT COMPONENTS:

CURRENT LIMITING FUSES:	
13KV, 80A, X-LIMITER	M&S 531-454-802
23KV, 50A, X-LIMITER	M&S 531-455-001
POTENTIAL TRANSFORMERS:	
13KV, INTERNALLY FUSED	M&S 461-088-059
23KV, INTERNALLY FUSED	M&S 461-088-105
CAPACITOR CANS:	
7620V, 400KVAR, TWO-BUSHING	M&S 225-402-130
13,200V, 400KVAR, TWO-BUSHING	M&S 225-402-230
VACUUM SWITCHES:	
13KV, 200A	M&S 275-108-120
23KV, 200A	M&S 275-108-130

FPL
OH & UG DISTRIBUTION SYSTEM STANDARDS

4	5/21/12	ADDED "PAD-MOUNTED"	JGV	ELS	WM
3	3/19/05	UPDATE DRAWING (M&S NUMBERS)	LFV	ELS	JJM
2	3/25/05	UPDATE DRAWING (M&S NUMBERS)	LFV	ELS	JJM
		UPDATE DRAWING (TEXT)	LFV	ELS	JJM

ORIGINATOR: LFV
DRAWN BY: J. SHOUP
CAM 23-0228
DATE: 04/14/00 APPROVED: J.J. MCEVOY
SUPERVISOR, OH/UG PRODUCT
Exhibit SCALE

J–4.0.2	TYPICAL INSTALLATION OF 25 KV S & C DEAD FRONT SWITCHGEAR AND THREE PHASE PAD–MOUNTED CAPACITOR BANK	J–4.0.2

NOTES:
1. INSTALL 92" X 92" PRECAST PAD (M&S 162–251–005)
2. DRIVE GROUND RODS & ATTACH #2 CU GROUND TO GROUNDING LUGS.
3. INSTALL URD CAPACITOR BANK (M&S 223–388–001) ON PAD.
4. INSTALL ROTATABLE FEED–THRU BUSHING 25KV (M&S 163–250–002) ON EACH BUSHING.
5. INSTALL 200 AMP ELBOWS ON ROTATABLE FEED–THRU BUSHINGS.
6. INSTALL 18KV ELBOW ARRESTERS (M&S 334–015–005) ON ROTATABLE FEED–THRU BUSHINGS.

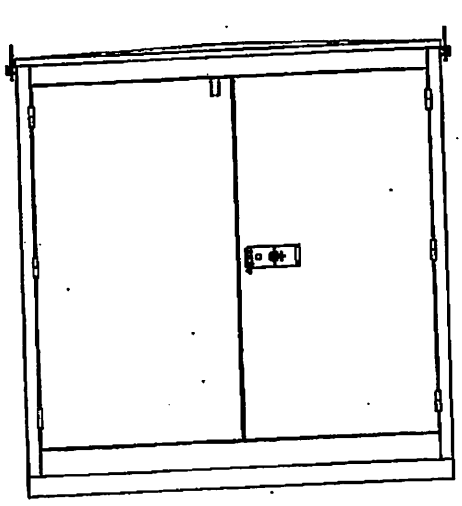

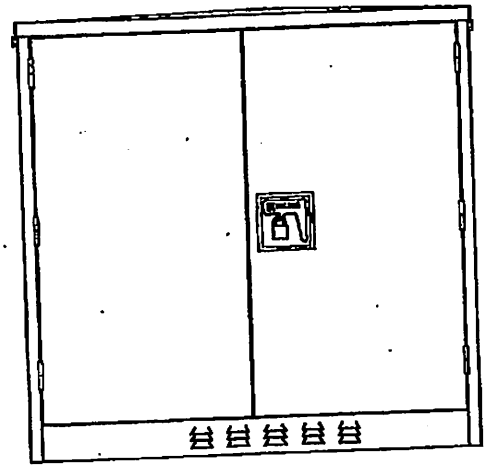

CAPACITOR CABINET

PAD–MOUNTED SWITCH CABINET

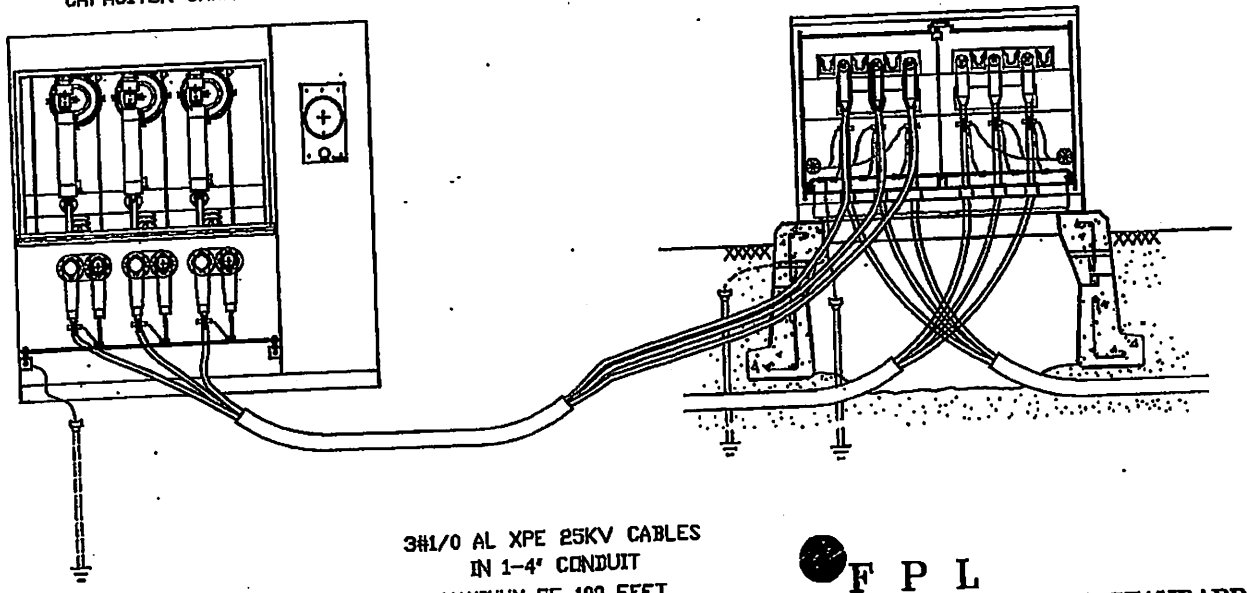

3#1/0 AL XPE 25KV CABLES
IN 1–4" CONDUIT
MAXIMUM OF 100 FEET

F P L
OH & UG DISTRIBUTION SYSTEM STANDARDS

ORIGINATOR: LFV			DRAWN BY: J. SHOUP
			CAM 23-0228
JGV	ELS	WM	DATE: 07/26/01 APPROVED: J.J. MCEVOY SUPERVISOR, OH/UG PRODUCT Exhibit SCALE: NOT

J-4.0.3	MALTON 25KV, 200A, 125KV BIL, 1200KVAR PAD-MOUNTED CAPACITOR BANK	J-4.0.3

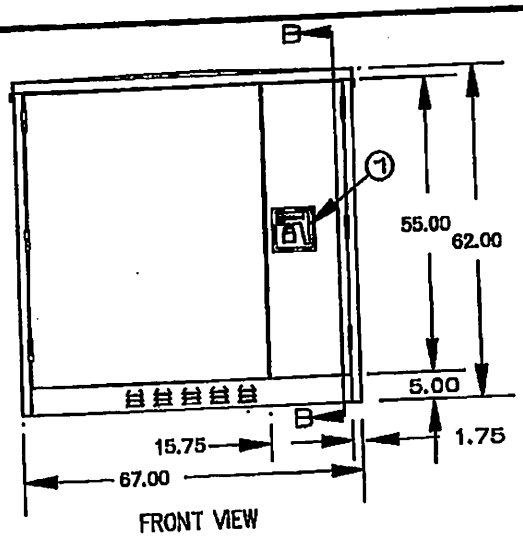

FRONT VIEW

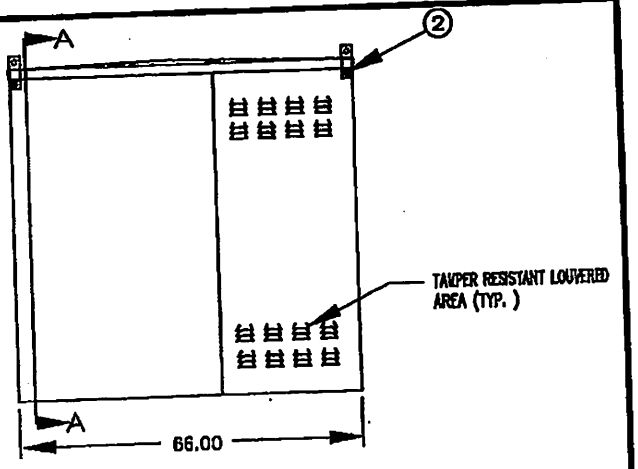

RIGHT SIDE VIEW

ITEM	QTY	DESCRIPTION
16	1	4-POINT TERMINAL BLOCK
15	3	CAPACITORS, 400 KVAR, 13200V, 150KV BIL, 1-BUSHING COOPER #CEP133422 OR EQUAL 23
14	3	FUSE MOUNTING COOPER TYPE NX - CODE 6 W/50A X-LIMITER FUSE 25KV
13	1	INNER DOOR BARRIER - CLEAR LEXAN
12	LOT	#2 FLEXIBLE COPPER WIRE
11	11	INSULATOR 25KV, 125KV BIL
10	1	MANUFACTURERS NAMEPLATE
9	2	GROUNDING STRAPS
8	1	METER SOCKET 100 AMP, 4-TERMINAL, RING TYPE
7	3	PARKING STAND
6	3	BUSHING WELL 200AMP, 25KV, 125KV BIL
5	1	1/4" CLEAR LEXAN WINDOW (REMOVABLE TO ACCESS FUSES)
4	1	POTENTIAL TRANSFORMER, SINGLE BUSHING, 120:1 1KVA - INTERNALLY FUSED 23
3	3	VACCUUM SWITCH, 200A, 25KV, 5-PIN CONTROL, MANUAL TRIP JOSLYN VERSAVAC 23
2	4	5/8-11 UNC THREADED INSERTS WITH REMOVABLE LIFTING TABS
1	2	HANDLE ASSY. W/ S.S. HEX BOLT, 3-PT. LATCHING

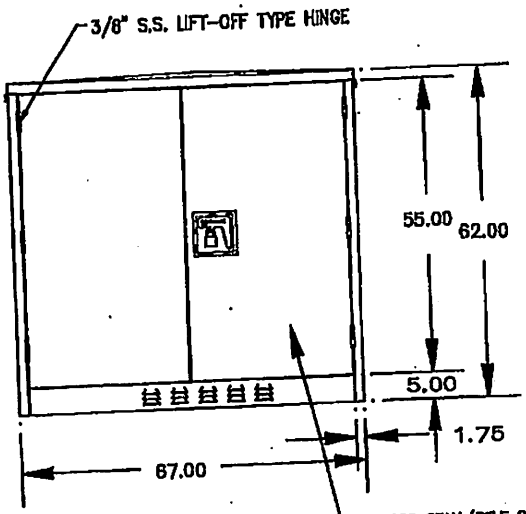

REAR VIEW

NOTES:

1. MATERIAL IS 12 GA. OR 11 GA. (.105) STEEL - AS SPECIFIED
2. STEEL IS PHOSPATE TREATED FOR PAINT ADHESION
3. ENCLOSURE IS PAINTED WITH MALTON "POLYMAX PLUS" FINISHING PROCESS TO MEET ANSI/EEI PERFORMANCE GUIDLINES PAINT COLOR: MUNSELL 7GY3.29/1.5 GREEN.
4. ENCLOSURE CONSTRUCTION TO MEET THE LATEST ANSI STANDARD C57.12.28

REV	DATE	BY	DESCRIPTION
D	4/7/00	TG	ADDED BIL #
C	3/11/00	TG	CHANGE FUSE MOUNTING FROM 12 TO 13
B	12/03/97	RR	ADDED 4.5" SLOT TO EACH SIDE FOR PROPER CLEARANCE BETWEEN BUSHINGS AND DOOR CLOSURE
A	11/21/97	RR	ADDED PAD FOR MOUNTING RECEIVED LOWER BUSHING IN TOP PLATE REMOVED PAGE "A"

TOLERERANCE UNLESS NOTED

.XX	±.02
.XXX	±.010

FPL

OH & UG DISTRIBUTION SYSTEM STANDARDS

ORIGINATOR: LFV

DRAWN BY: J. SHOUP

DATE: 07/26/01

APPROVED: J.J. MCEVOY
SUPERVISOR, OH/UG PRODUCT

CAM 23-0228
Exhibit SCALE

J-4.0.4

MALTON 25KV 200A, 125KV BIL, 1200KVAR PAD-MOUNTED CAPACITOR BANK

J-4.0.4

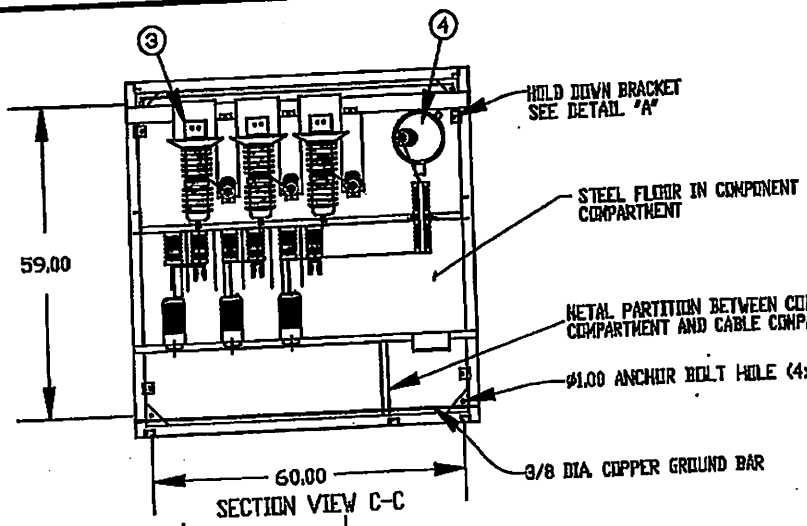

SECTION VIEW C-C

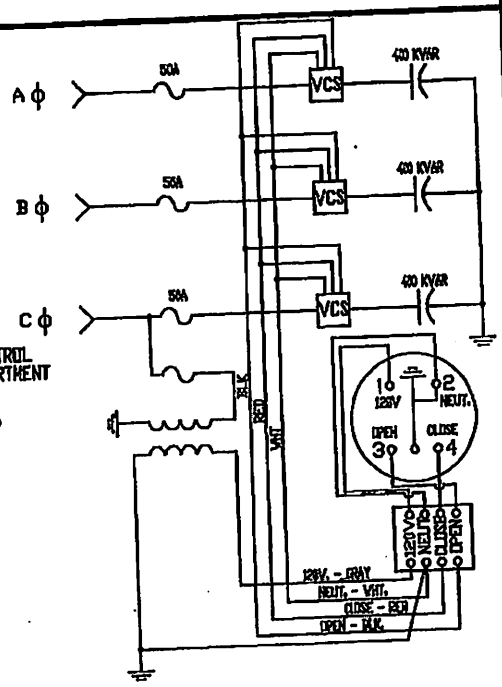

LINE DIAGRAM

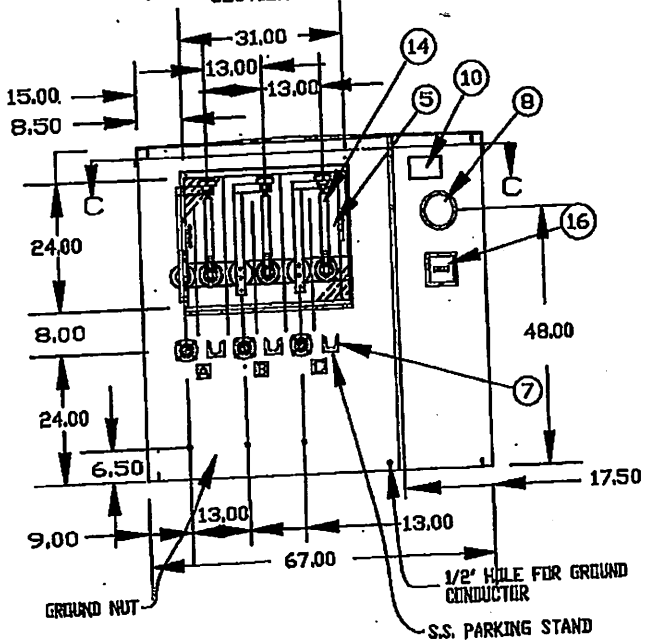

SECTION VIEW A-A

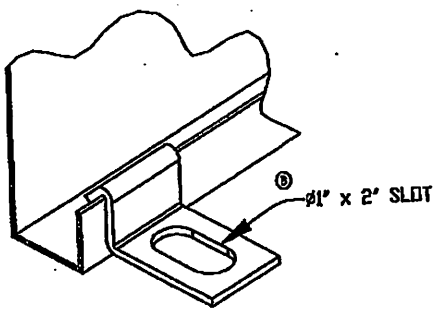

DETAIL "A"

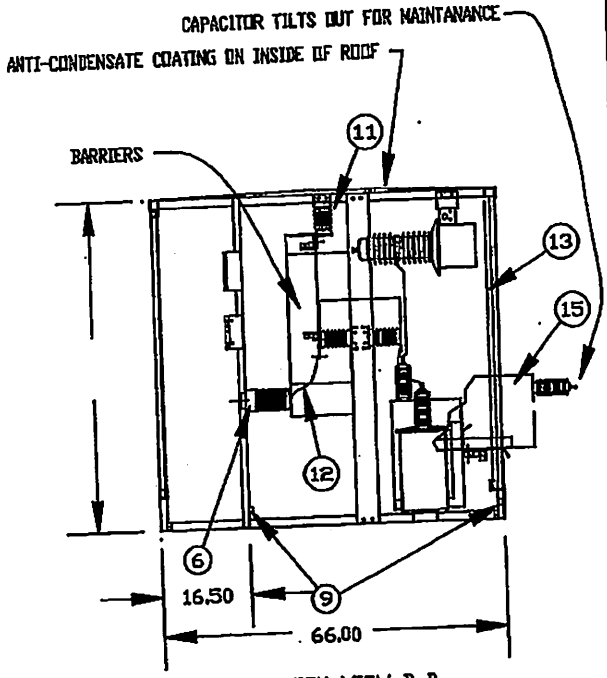

SECTION VIEW B-B

FPL

OH & UG DISTRIBUTION SYSTEM STANDARDS

ORIGINATOR: LFV

DRAWN BY: J. SHOUP

DATE: 07/26/01

APPROVED: J.J. MCEVOY
SUPERVISOR, OH/UG PRODUCT

CAM 23-0228

Exhibit SCALE

J-4.0.5

MALTON 15KV, 200A, 95KV BIL, 1200KVAR PAD-MOUNTED CAPACITOR BANK

J-4.0.5

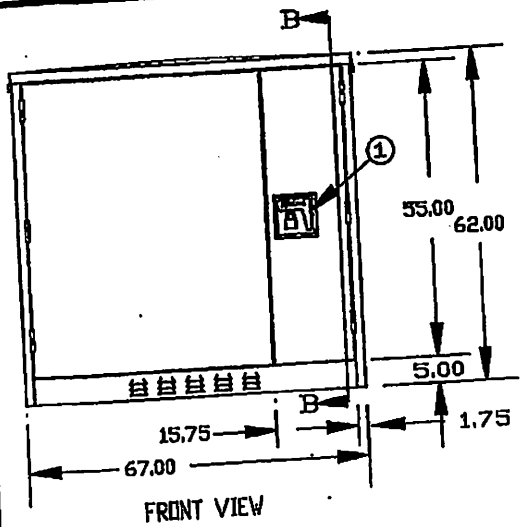

FRONT VIEW

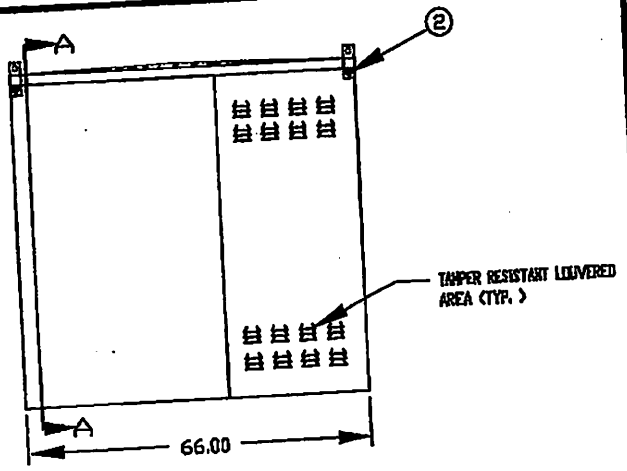

RIGHT SIDE VIEW

ITEM	QTY	DESCRIPTION
16	1	4-POINT TERMINAL BLOCK
15	3	CAPACITORS, 400 KVAR, 7620V, 95KV BIL, 1-BUSHING COOPER #CEP170B7FA OR EQUAL 15
14	3	FUSE MOUNTING COOPER TYPE NX - CODE 6 V/80A X-LIMITER FUSE 15KV
13	1	INNER DOOR BARRIER - CLEAR LEXAN
12	LOT	#2 FLEXIBLE COPPER WIRE
11	11	INSULATOR 25KV, 125KV BIL
10	1	MANUFACTURERS NAMEPLATE
9	2	GROUNDING STRAPS
8	1	METER SOCKET 100 AMP, 4-TERMINAL, RING TYPE
7	3	PARKING STAND
6	3	BUSHING WELL 200AMP, 25KV, 125KV BIL
5	1	1/4" CLEAR LEXAN WINDOW (REMOVABLE TO ACCESS FUSES)
4	1	POTENTIAL TRANSFORMER, SINGLE BUSHING, 63.51 IKVA - INTERNALLY FUSED 15
3	3	VACCUUM SWITCH, 200A, 15KV, 5-PIN CONTROL, MANUAL TRIP JOSLYN VERSAVAC 15
2	4	5/8-11 UNC THREADED INSERTS WITH REMOVABLE LIFTING TABS
1	2	HANDLE ASSY. W/ S.S. HEX BOLT, 3-PT. LATCHING

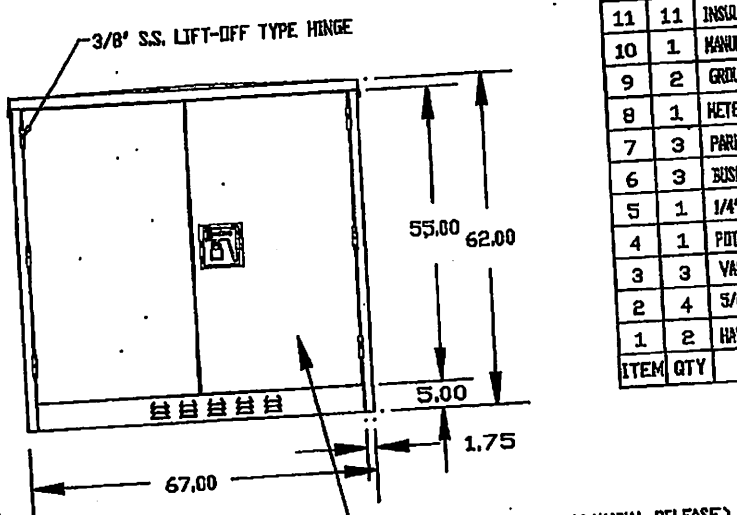

REAR VIEW

NOTES:

1. MATERIAL IS 12 GA. OR 11 GA. (.105) STEEL - AS SPECIFIED
2. STEEL IS PHOSPATE TREATED FOR PAINT ADHESION
3. ENCLOSURE IS PAINTED WITH MALTON "POLYMAX PLUS" FINISHING PROCESS TO MEET ANSI/EEI PERFORMANCE GUIDLINES PAINT COLOR: MUNSELL 7GY3.29/1.5 GREEN.
4. ENCLOSURE CONSTRUCTION TO MEET THE LATEST ANSI STANDARD C57.12.28

REV	DATE	BY	DESCRIPTION
A	04/05/00	TG	ADDED N & S B

TOLERERANCE UNLESS NOTED	
.XX	±.02
.XXX	±.010

FPL

OH & UG DISTRIBUTION SYSTEM STANDARDS

ORIGINATOR: LFV

DRAWN BY: J. SHOUP

DATE: 07/26/01 APPROVED: J.J. MCEVOY SUPERVISOR, OH/UG PRODUCT SUPPORT SERVICES

SCALE

J-4.0.6

MALTON 15KV, 200A, 95KV BIL, 1200KVAR PAD-MOUNTED CAPACITOR BANK

J-4.0.6

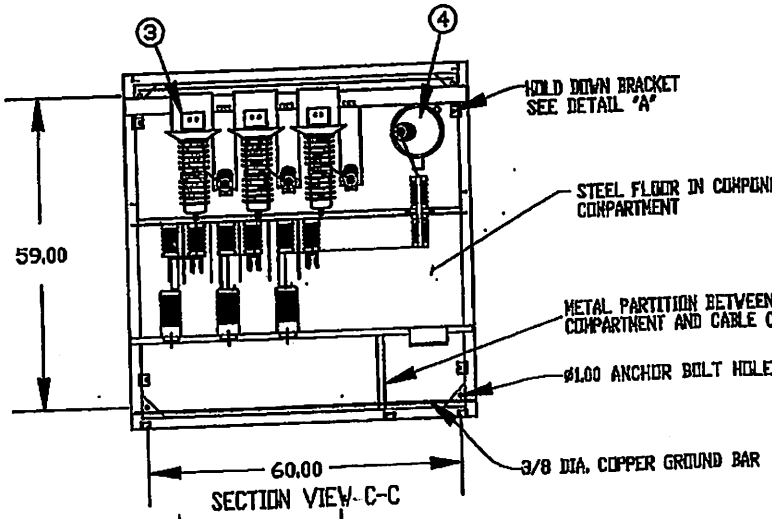

SECTION VIEW C-C

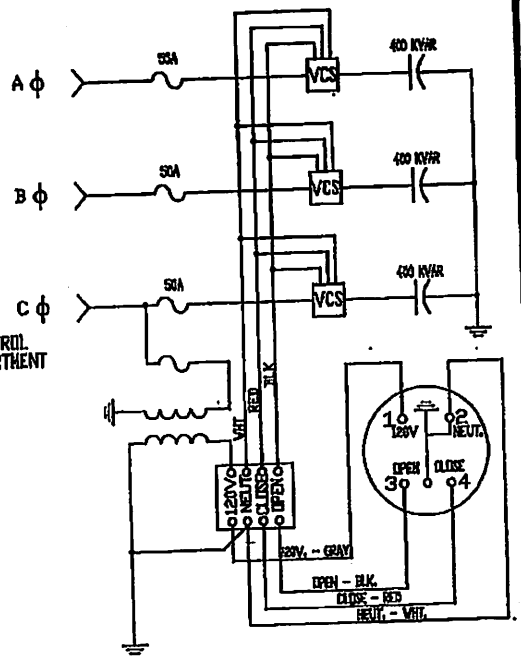

LINE DIAGRAM

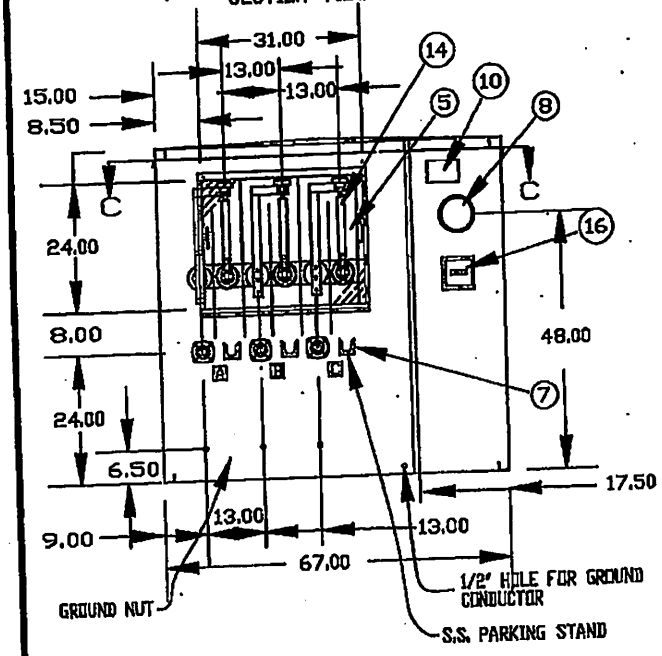

SECTION VIEW A-A

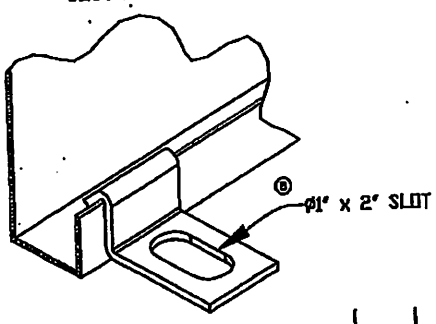

DETAIL "A"

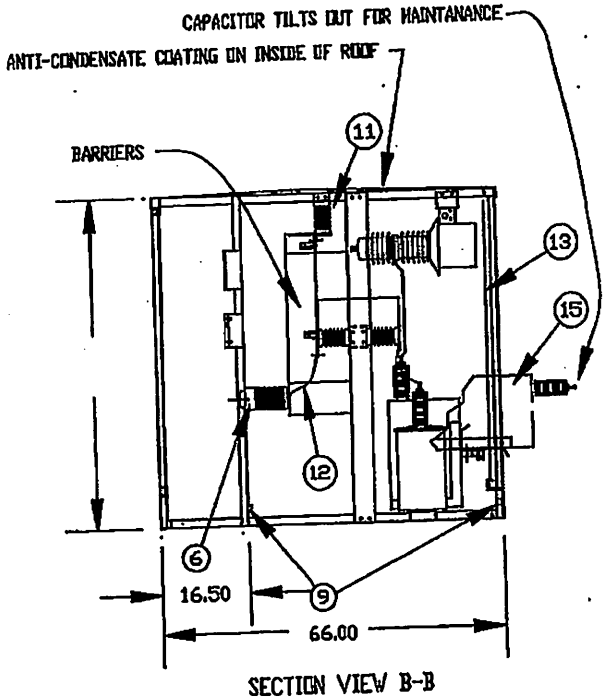

SECTION VIEW B-B

FPL

OH & UG DISTRIBUTION SYSTEM STANDARDS

ORIGINATOR: LFV

DRAWN BY: J. SHOUP

CAM 23-0228

DATE: 07/28/01 APPROVED: J.J. MCEVOY SUPERVISOR, OH/UG PRODUCT

NO SCALE

J-4.0.7

SHALLBETTER 25KV, 125KV BIL, 1200KVAR, DEAD-FRONT, PAD-MOUNTED, CAPACITOR BANK

J-4.0.7

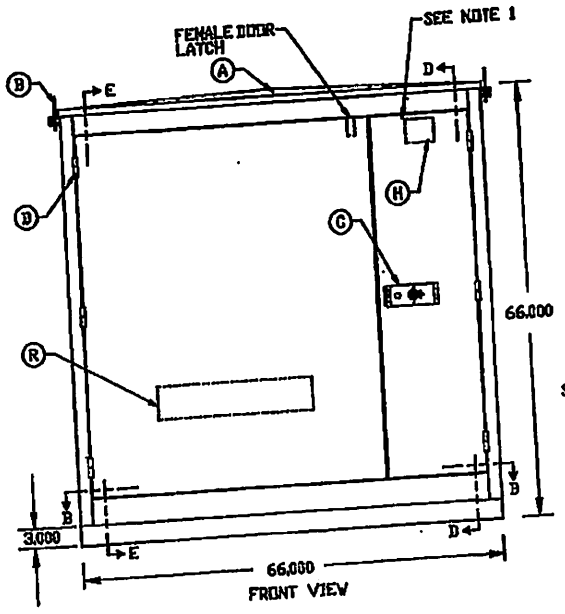

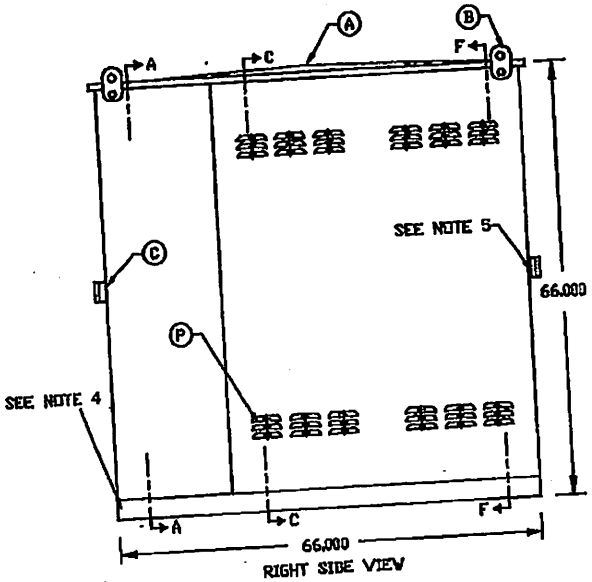

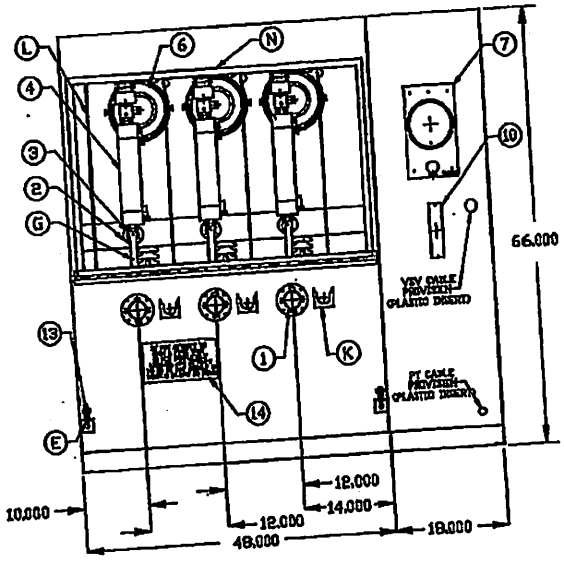

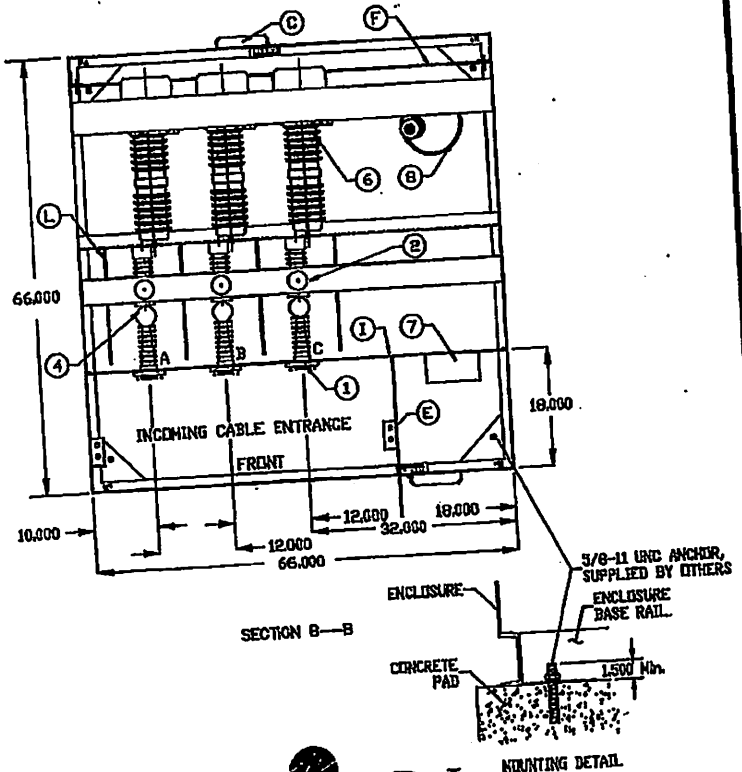

J

F P L

OH & UG DISTRIBUTION SYSTEM STANDARDS

ORIGINATOR: LFV

DRAWN BY: J. SHOUP

DATE: 07/26/01 APPROVED: J.J. MCEVOY SUPERVISOR, OH/UG PRODUCT SUPPORT SERVICES

CAM 23-0220 NO SCALE

J–4.0.8	SHALLBETTER, 25KV, 125KV BIL, 1200KVAR DEAD–FRONT, PAD–MOUNT, CAPACITOR BANK	J–4.0.8

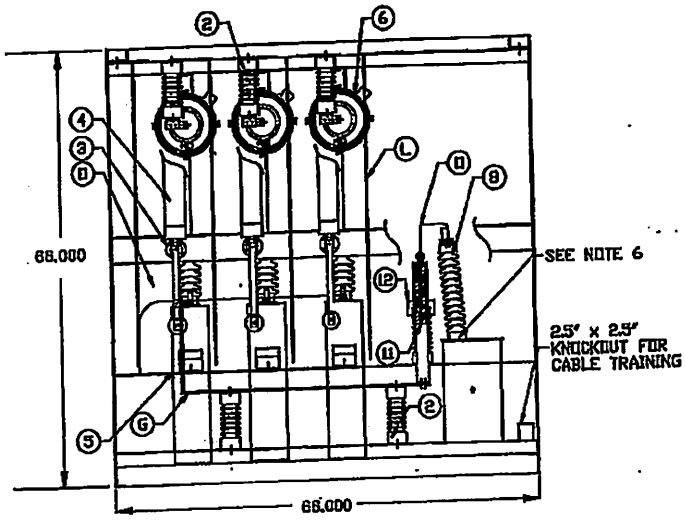

SECTION C—C

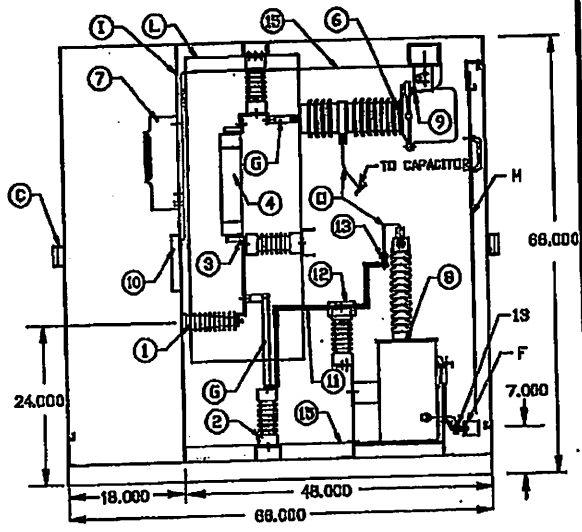

SECTION D—D

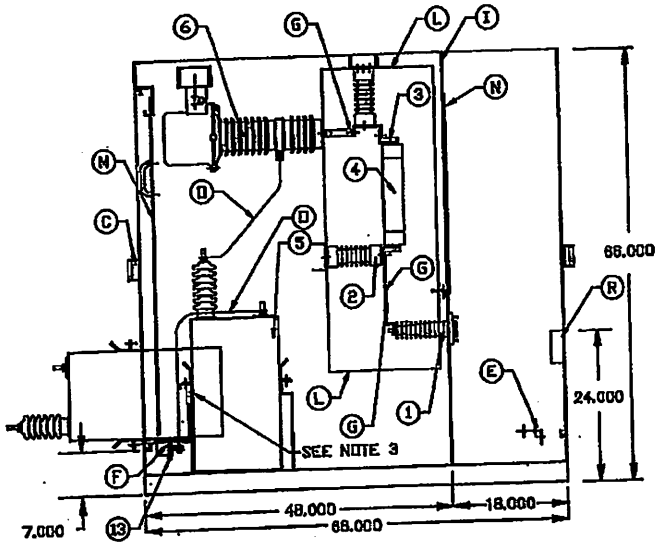

SECTION E—E

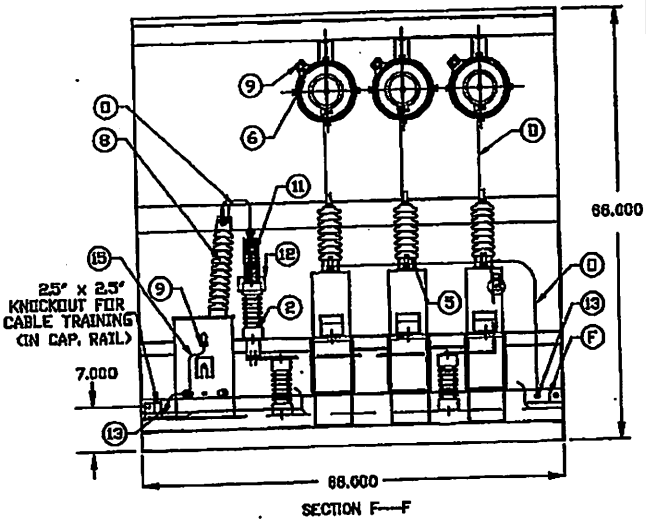

SECTION F—F

F P L

OH. & UG DISTRIBUTION SYSTEM STANDARDS

ORIGINATOR: LFV

DRAWN BY: J. SHOUP

DATE: 07/26/01 APPROVED: J.J. MCEVOY SUPERVISOR, OH/UG PRODUCT

NO SCALE

J-4.0.9

SHALLBETTER, 25KV, 125KV BIL, 1200KVAR, DEAD-FRONT, PAD-MOUNT, CAPACITOR BANK

J-4.0.9

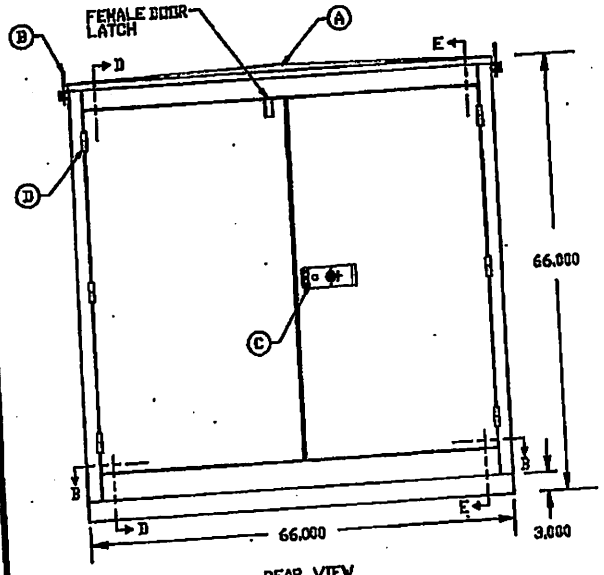

REAR VIEW

SYSTEM RATING

NOMINAL SYSTEM VOLTAGE	23/13.28 kV GROUNDED WYE
MAXIMUM DESIGN VOLTAGE	25 kV
BASIC INSULATION LEVEL (BIL)	125 kV
CONTINUOUS CURRENT	200 AMP
FUSE TYPE	NX CURRENT-LIMITING
FUSE RATING, MAXIMUM	200E AMP
FUSE INTERRUPTING, SYMMETRICAL	9,400 AMP
KVAR	1200
PHASE	THREE
HERTZ	60 HZ.
WEIGHT	2,150 Lbs.
CATALOG NUMBER	SCBD-P332512000SW-0A-FPL

CONSTRUCTION NOTES

•NEMA TYPE 3R, 11 GAUGE GALVANNEAL, WELDED CONSTRUCTION, WELDS AND SEAMS GROUND SMOOTH.
•FINISH COAT IS MUNSELL No. 7GY 3.29/1.5, GREEN. PAINT FINISH MEETS OR EXCEEDS ANSI C57.12.28-1988 PAINT SPECIFICATIONS FOR PAD-MOUNT EQUIPMENT ENCLOSURE INTEGRITY.
•ENCLOSURE TO HAVE A 3", 304L STAINLESS STEEL FORMED CHANNEL BASE.

FEATURES

ACROSS KINKED ROOF FOR ADDED STRENGTH AND PREVENTING STANDING MOISTURE.
BREMOVABLE LIFTING PLATES WITH BLIND MOUNTING HOLES.
CSBI'S "SENTRY LATCH" 3-POINT POSITIVE LATCH MECHANISM, SECURED AND OPERATED BY 1/2-TURN, CAPTIVE, RECESSED HEX-HEAD BOLT AND SHIELDED PADLOCK SHACKLE.
DHINGE, LOOSE JOINT PIN, 304L STAINLESS STEEL, SOLID WELDED TO DOOR AND CABINET, ALLOWS DOORS TO BE REMOVED IN THE OPEN POSITION ONLY.
EFRONT GROUND PADS, 304L STAINLESS STEEL, WITH 1/2"-13 UNC THREADED HOLE FOR CUSTOMER SUPPLIED GROUND CONNECTORS. PADS ARE UNPAINTED AND WELDED TO ENCLOSURE.
FREAR GROUND BUS, FULL LENGTH, CONTINUOUS, SILVER PLATED COPPER, SUPPORTED WITH UNPAINTED, STAINLESS STEEL GROUND PADS WELDED TO ENCLOSURE.
GBUS BAR, SILVER PLATED COPPER, FREE OF SHARP EDGES OR BURRS.
HMANUFACTURE'S DATA PLATE, CONTAINS INFORMATION LISTED UNDER SYSTEM RATING, NON-CORROSIVE, PERMANENTLY STAMPED AND ATTACHED TO ENCLOSURE.
IEQUIPMENT WALL, FULL HEIGHT.
JDOOR STAYS (RETAINED) HOLD DOORS IN 90°, 110°, OR 140° OPEN POSITION.
KPARKING STANDS, 14 GAUGE 304L STAINLESS STEEL, WELDED TO EQUIPMENT WALL.
LBARRIERS, 3/16" GPO-3, GLASS REINFORCED POLYESTER.
MCOMPARTMENT BARRIER, 1/4" LEXAN, CLEAR POLYCARBONATE, REMOVABLE, WITH NON-CONDUCTIVE HANDLES.
NFUSE ACCESS BARRIER, 1/4" CLEAR POLYCARBONATE (LEXAN), SECURED WITH 3/4 TURN FASTENERS.
OCOPPER ROD, HARDDRAWN 3/8" DIA.
PSCREENED, TAMPER PROOF LOUVERS.
RSPARE FUSE POCKET

SPECIAL NOTES FOR MANUFACTURER ONLY:

1NO SIGNS OR LABELS TO BE ON ANY EXTERIOR PART OR INTERIOR DOORS OF ENCLOSURE, PER FP&L SPEC. (SBI DATA PLATE WILL BE ON INTERIOR OF FRONT MALE DOOR).
2ND HIGH VOLTAGE CABLE TO BE USED ON ANY PART OF THIS GEAR, ALL HV ELECTRICAL CONNECTIONS TO BE MADE WITH HARDDRAWN BUS OR ROD.
3THIS ENCLOSURE UTILIZES A TILT-OUT CAPACITOR RACK, CAPACITORS TO BE ABLE TO INDIVIDUALLY TILTED OUT AT 90°.
4ENCLOSURE BOTTOM CHANNEL TO BE A 3" FORMED 304L STAINLESS STEEL CHANNEL.
6DOOR LATCH HAS A HEX HEAD BOLT.
6POTENTIAL TRANSFORMER IS INTERNALLY FUSED.
7THESE NOTES ARE FOR MANUFACTURER ONLY.

J

FPL
OH & UG DISTRIBUTION SYSTEM STANDARDS

ORIGINATOR: LFV
DRAWN BY: J. SHOUP
DATE: 07/26/01
APPROVED: J.J. MCEVOY
SUPERVISOR, OH/UG PRODUCT

J-4.0.10

SHALLBETTER 25 KV, 1200 KVAR PAD-MOUNTED CAPACITOR BANK

J-4.0.10

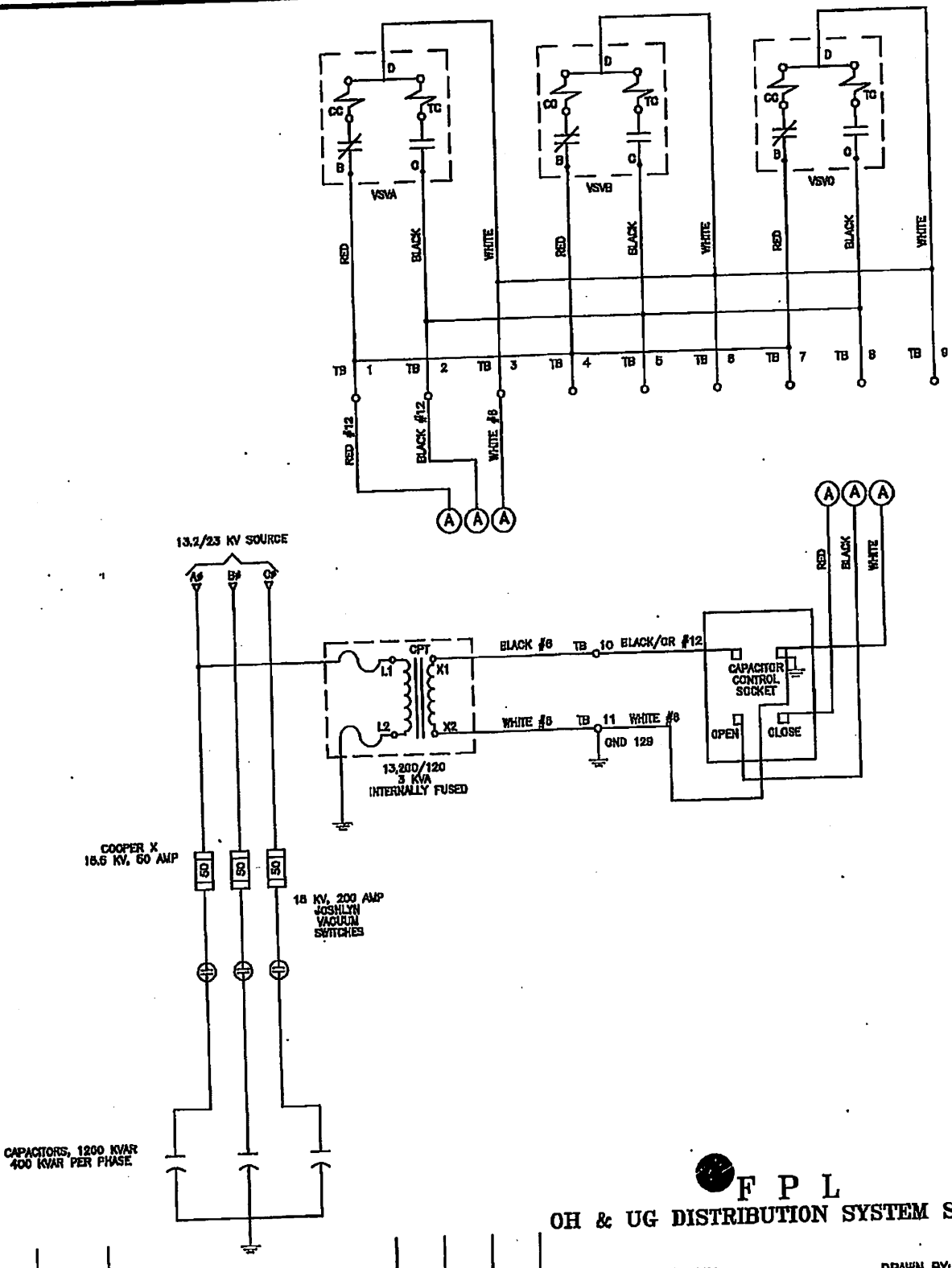

F P L

OH & UG DISTRIBUTION SYSTEM STANDARDS

ORIGINATOR: LFV

DRAWN BY: J. SHOUP

DATE: 07/26/01 APPROVED: J.J. MCEVOY
SUPERVISOR, OH/UG PRODUCT

NO SCALE

C-39.0.1 INSTALLATION OF S&C TYPE PME-4 DEAD FRONT THREE PHASE PAD MOUNTED FUSE CABINET FOR 13 AND 23 KV MAXIMUM FUSE 200 AMP (NEW DESIGN-SIX BUSHINGS ON LINE SIDE)

C-39.0.1

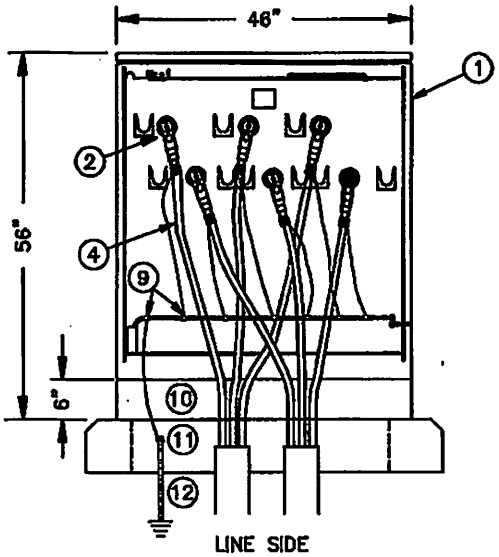

LINE SIDE

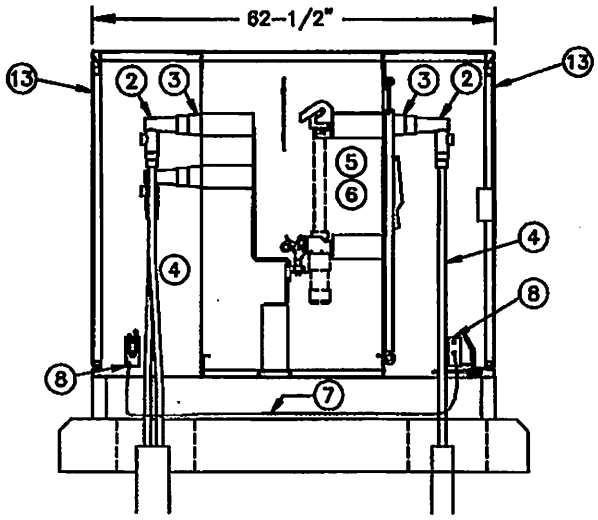

SIDE VIEW

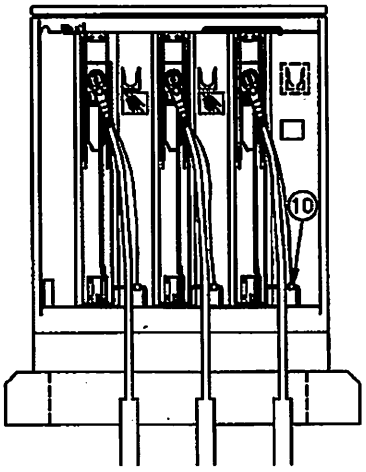

LOAD SIDE

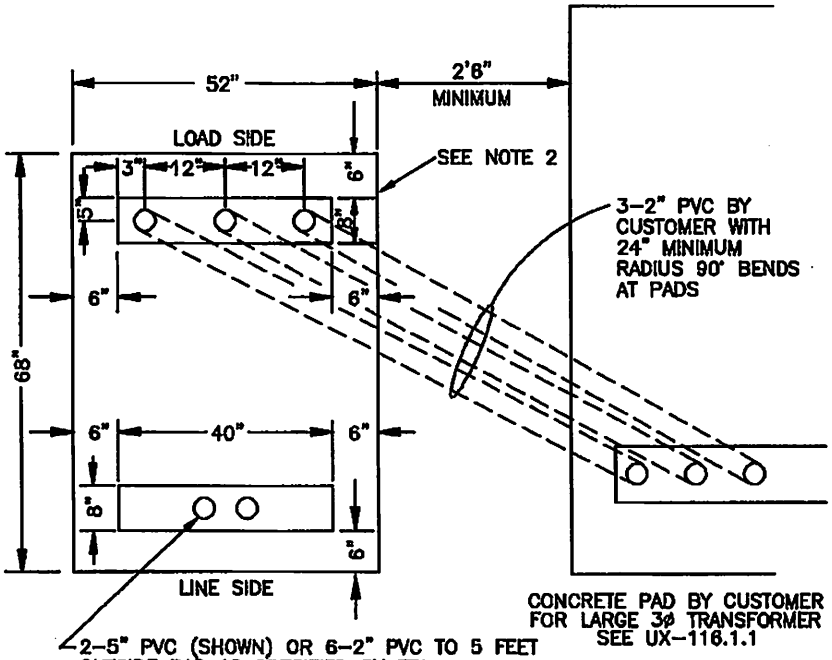

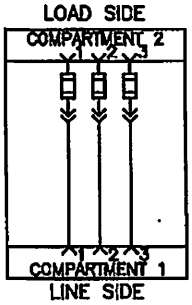

WEIGHT:1200 LBS.

SEE C-39.0.2 FOR MATERIAL LIST AND NOTES

FPL

OH & UG DISTRIBUTION SYSTEM STANDARDS

NO	DATE	REVISION	ORIG.	DRAWN	APPR.
2	9/8/03	UPDATE NOTES	CEA	ELS	JJM
1	1/31/03	UPDATE DRAWING TO NEW SIX BUSHING ON LINE SIDE DESIGN	CEA	JES	JJM

ORIGINATOR: PMG DRAWN BY: RAS

DATE: 8/09/96 APPROVED: J.J. MCEVOY SUPERVISOR, OH/UG PRODUCT SUPPORT SERVICES NO SCALE

CAM 23-0228 Exhibit 1 D. 43

TYPICAL INSTALLATION OF 25KV S&C VISTA THREE PHASE SWITCH FOR USE IN 13KV OR 23KV BELOW GRADE AND PAD MOUNTED APPLICATIONS

City of Fort Lauderdale

C-46.0.0

Bid 12453.618

TYPICAL BUSHING POSITION ON VISTA SWITCH MODEL 422 SHOWN
F=FEEDER L=LATERAL

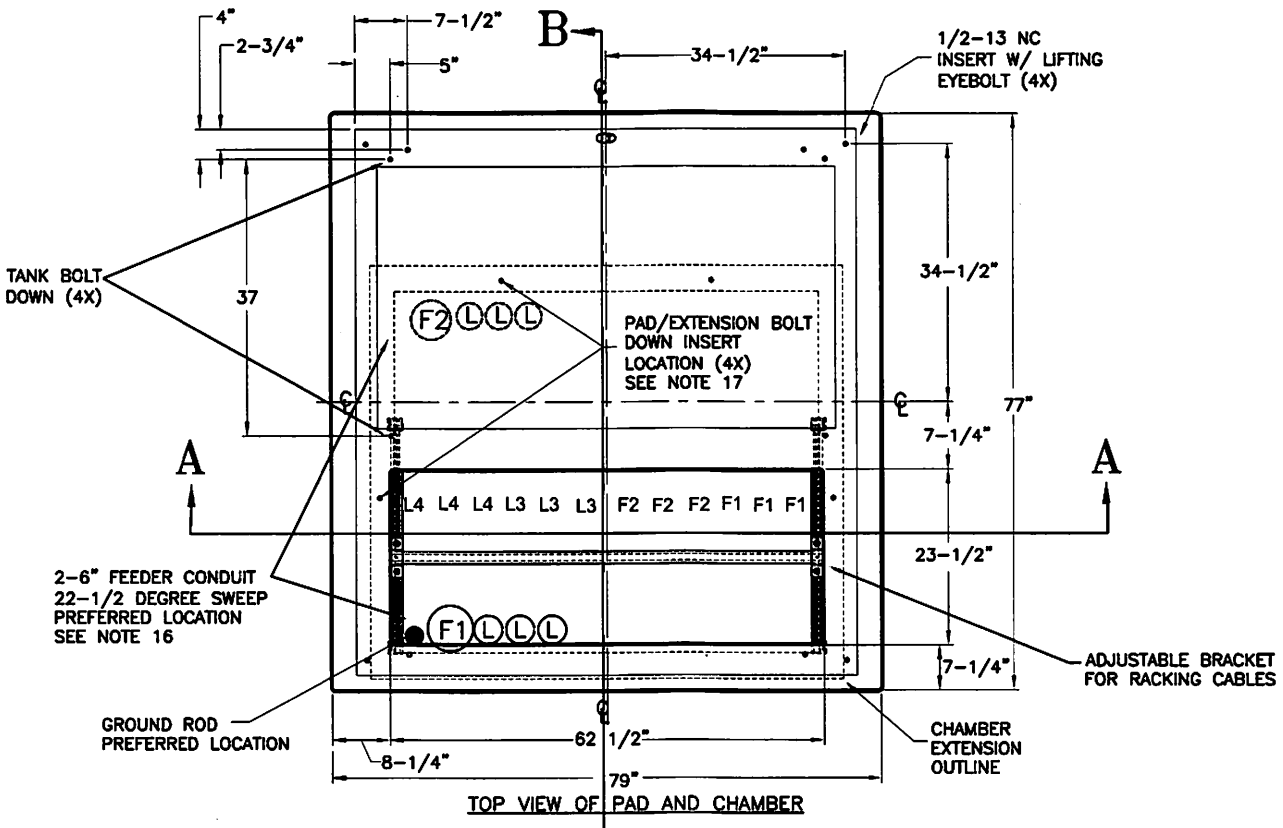

TOP VIEW OF PAD AND CHAMBER

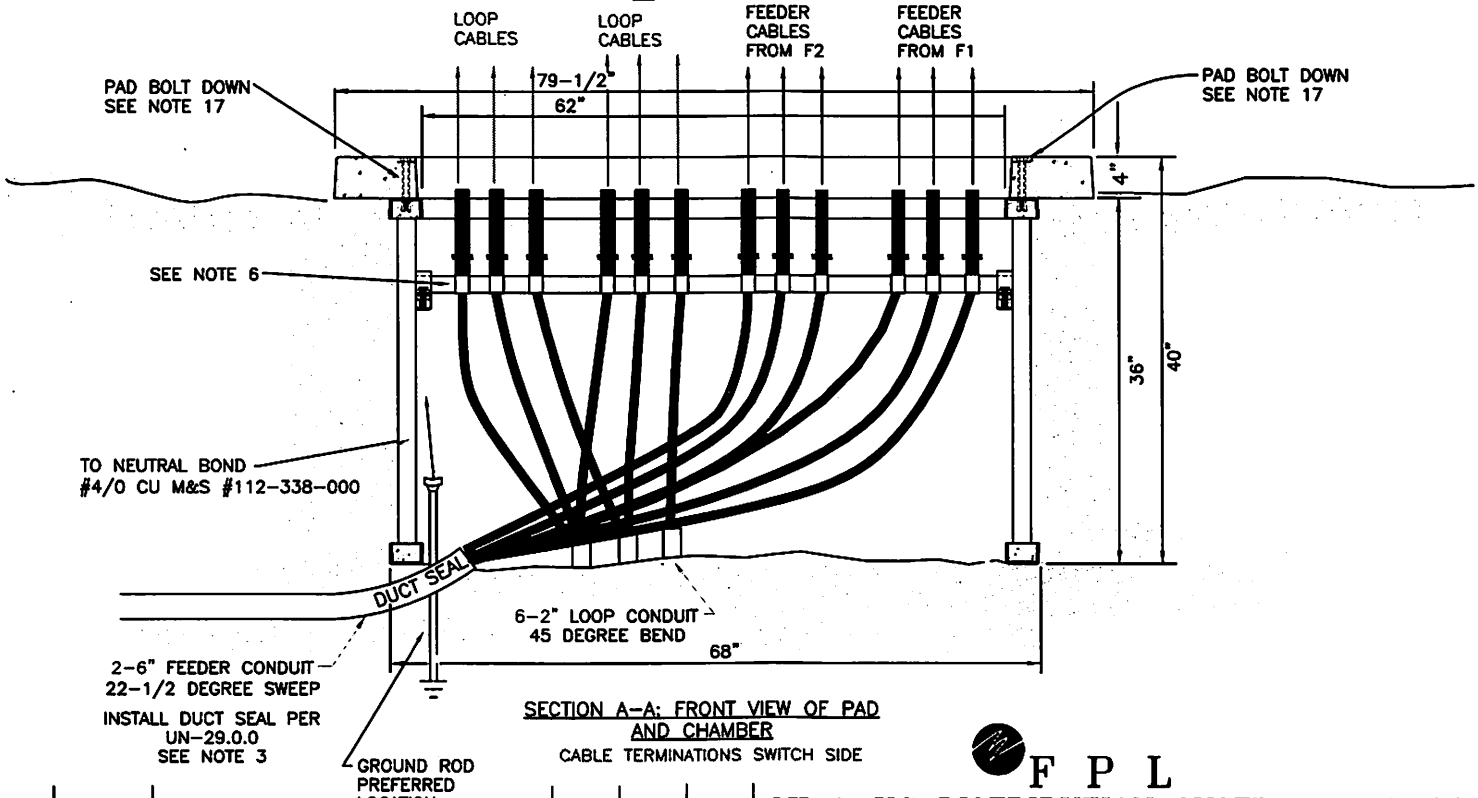

SECTION A-A: FRONT VIEW OF PAD AND CHAMBER
CABLE TERMINATIONS SWITCH SIDE

FPL

OH & UG DISTRIBUTION SYSTEM STANDARDS

ORIGINATOR: A. PANTOURIS
DRAWN BY: SCHILLING
DATE: 5/29/09
APPROVED: ARI LIMA
LEAD SUPERVISOR, UG SERVICES
NO SCALE

NO.	DATE	REVISION	ORIG.	DRAWN	APPR.
1	12/14/2020	10:42 AM LOOP CABLE IDENTIFICATION	JGV	ELS	WM

CAM 23-0228
Exhibit 1
P. 144

TYPICAL INSTALLATION OF 25KV S&C VISTA THREE PHASE SWITCH FOR USE IN 13KV OR 23KV BELOW GRADE AND PAD MOUNTED APPLICATIONS

City of Fort Lauderdale

C-46.0.1

TYPICAL VISTA SWITCH MODEL 422 SHOWN

TOP VIEW OPERATION SIDE

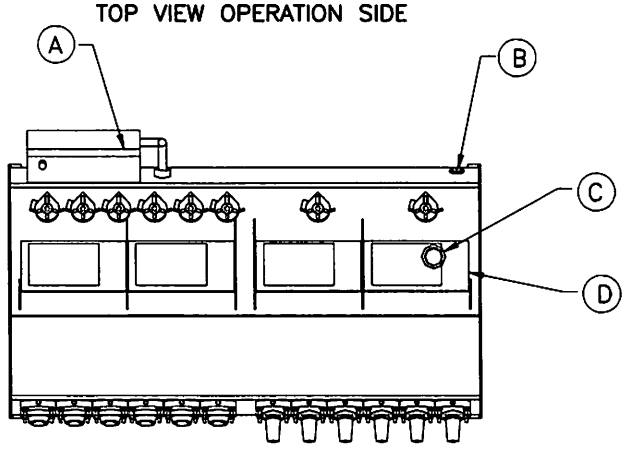

TOP VIEW TERMINATION SIDE

FEATURES IN THIS ASSEMBLY

A. OVERCURRENT CONTROL
B. GAS FILL PORT
C. PRESSURE GAUGE
D. WINDOW FOR VIEWING OPEN GAP AND GROUNDED POSITION OF LOAD-INTERRUPTER SWITCH OR FAULT INTERRUPTER
E. 200-AMPERE BUSHING-WELLS FOR FAULT-INTERRUPTER
F. 600-AMPERE BUSHINGS FOR LOAD-INTERRUPTER SWITCH
G. TWO-HOLE GROUND PAD
H. 600-AMPERE THREE-POLE LOAD-INTERRUPTER SWITCH WITH GROUND POSITION
I. OPERATING MECHANISM
J. MANUAL OPERATING HANDLE
K. NAMEPLATE
L. SUBMERSIBLE SF6-INSULATED TANK
M. 600-AMPERE ALUMINUM BUS
N. BASE BRACKET

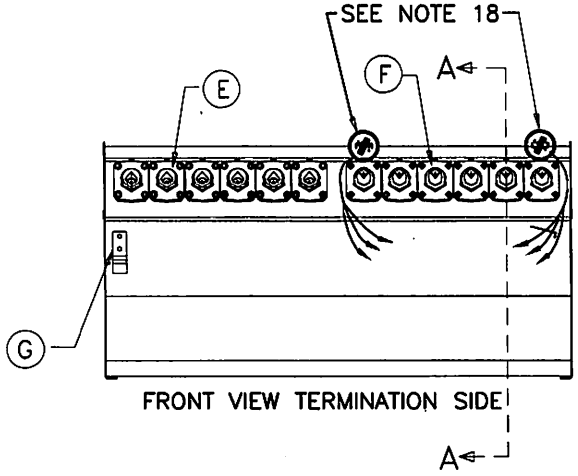

FRONT VIEW TERMINATION SIDE

TERMINATION SIDE

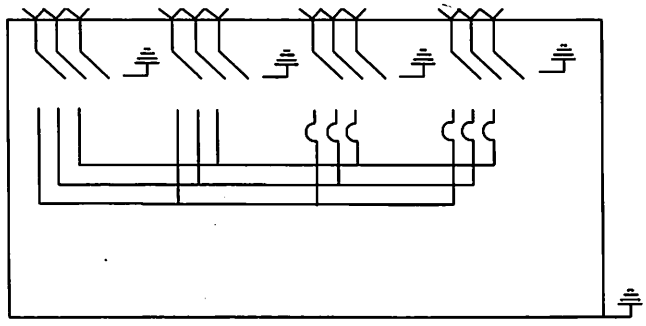

OPERATION SIDE

CONNECTION DIAGRAM

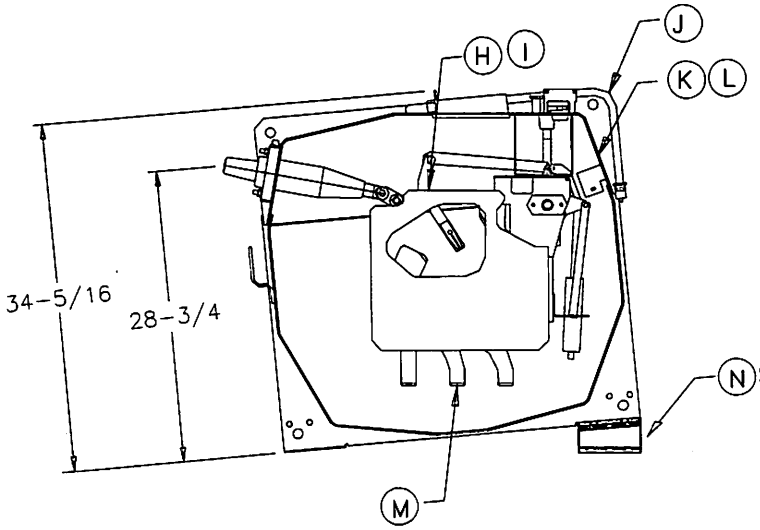

SECTION A-A: FEEDER SWITCH

F P L

OH & UG DISTRIBUTION SYSTEM STANDARDS

ORIGINATOR: A. PANTOURIS

DRAWN: SCHILLING

DATE: 7/27/09

APPROVED: ARI LIMA
LEAD SUPERVISOR, UG SERVICES

NO SCALE

NO.	DATE	REVISION	ORIG.	DRAWN	APPR.
1	12/14/2020 10:42 AM 11/14/12	CHANGE C-46.0.2 TO C-46.0.1	JGV	ELS	WM

TYPICAL INSTALLATION OF 25KV S&C VISTA THREE PHASE SWITCH FOR USE IN 13KV OR 23KV BELOW GRADE AND PAD MOUNTED APPLICATIONS

City of Fort Lauderdale

C-46.0.2

TYPICAL BUSHING POSITION ON VISTA SWITCH MODEL 431 SHOWN
F=FEEDER L=LATERAL

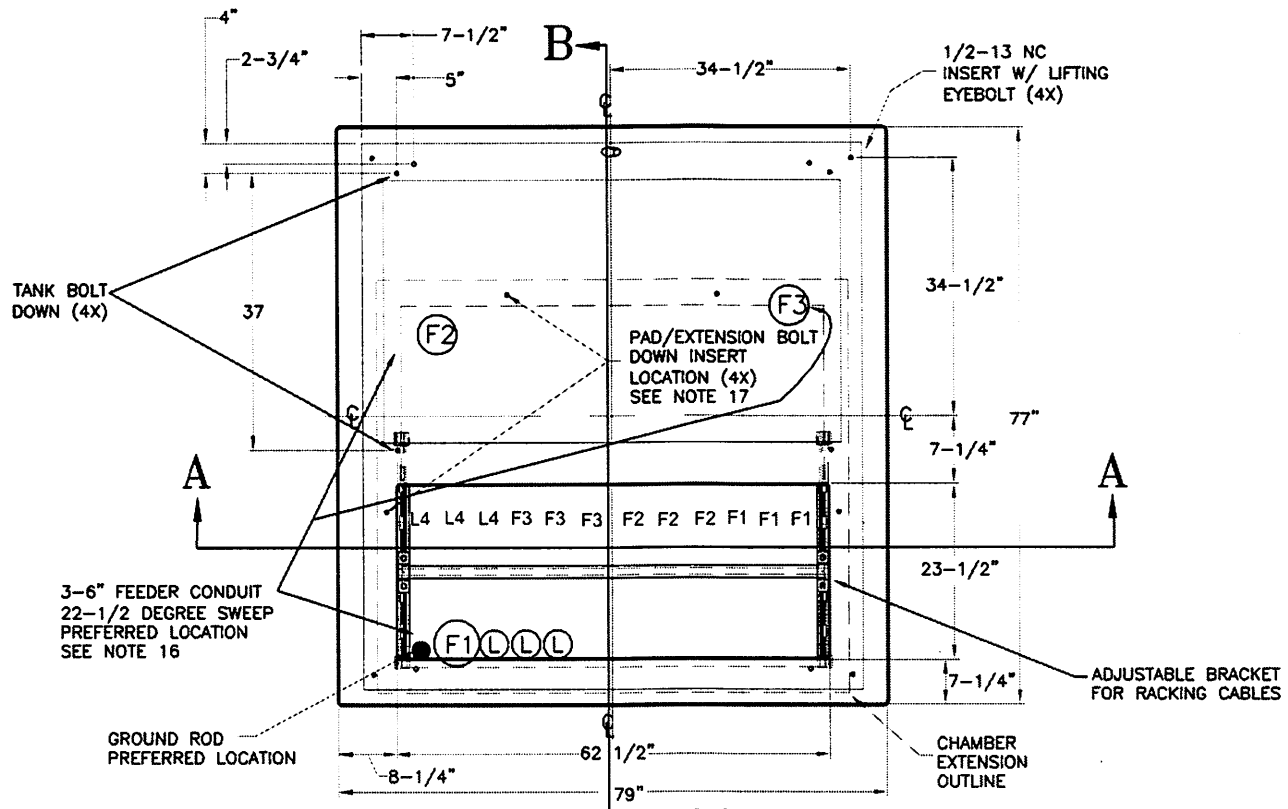

TOP VIEW OF PAD AND CHAMBER

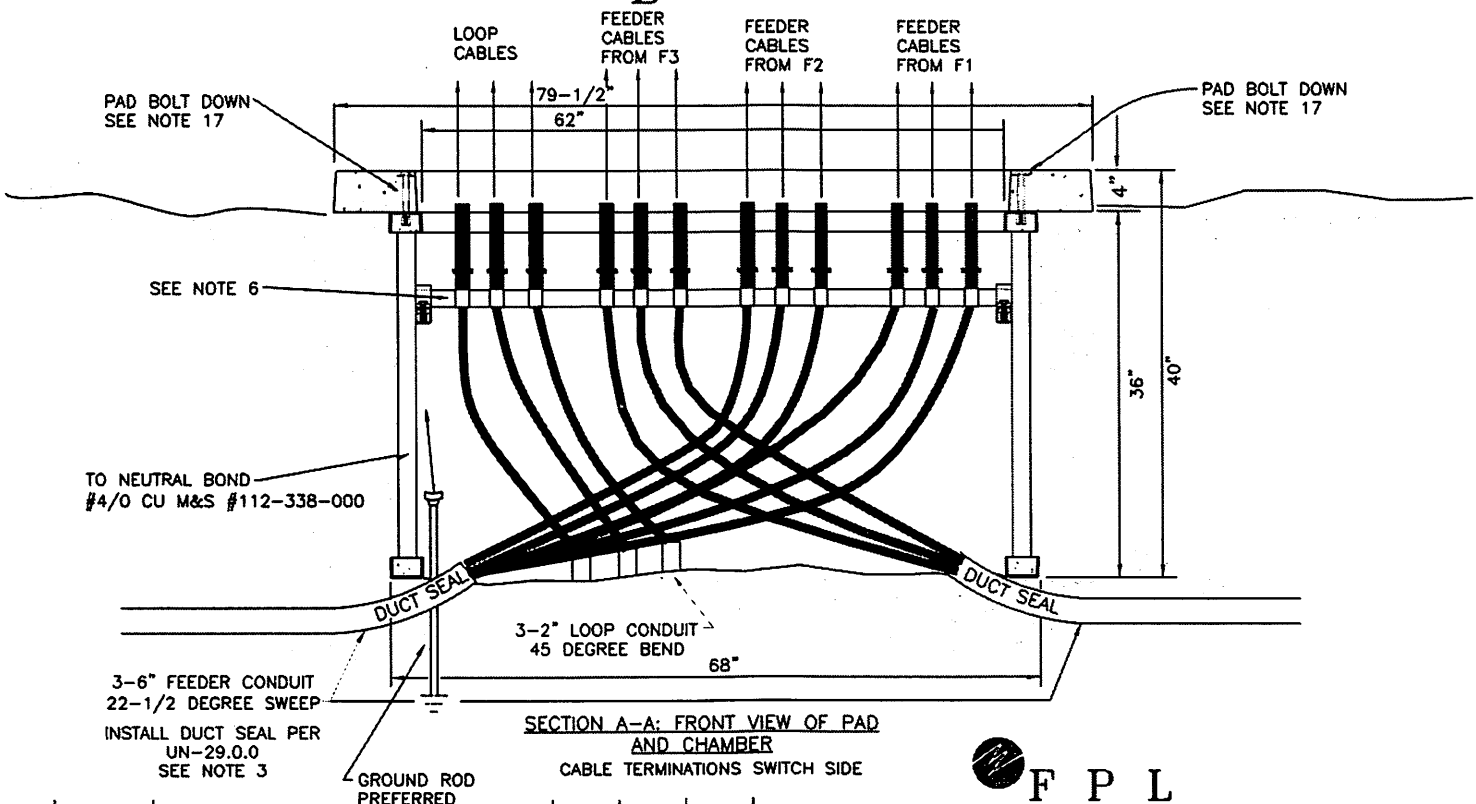

SECTION A-A: FRONT VIEW OF PAD AND CHAMBER
CABLE TERMINATIONS SWITCH SIDE

FPL

OH & UG DISTRIBUTION SYSTEM STANDARDS

NO.	DATE	REVISION	ORIG.	DRAWN	APPR.
1	12/14/2020	10:42 AM PAGE OF C-46	JGV	ELS	WM

ORIGINATOR: J. VALDES
DRAWN: 3-0228 SCHILLING
DATE: 3/16/2012
APPROVED: WILLIAM MONZON
LEAD SUPERVISOR, UG SERVICES
NO SCALE

C-46.0.3	TYPICAL INSTALLATION OF 25KV S&C VISTA THREE PHASE SWITCH FOR USE IN 13KV OR 23KV BELOW GRADE AND PAD MOUNTED APPLICATIONS	C-46.0.3

City of Fort Lauderdale

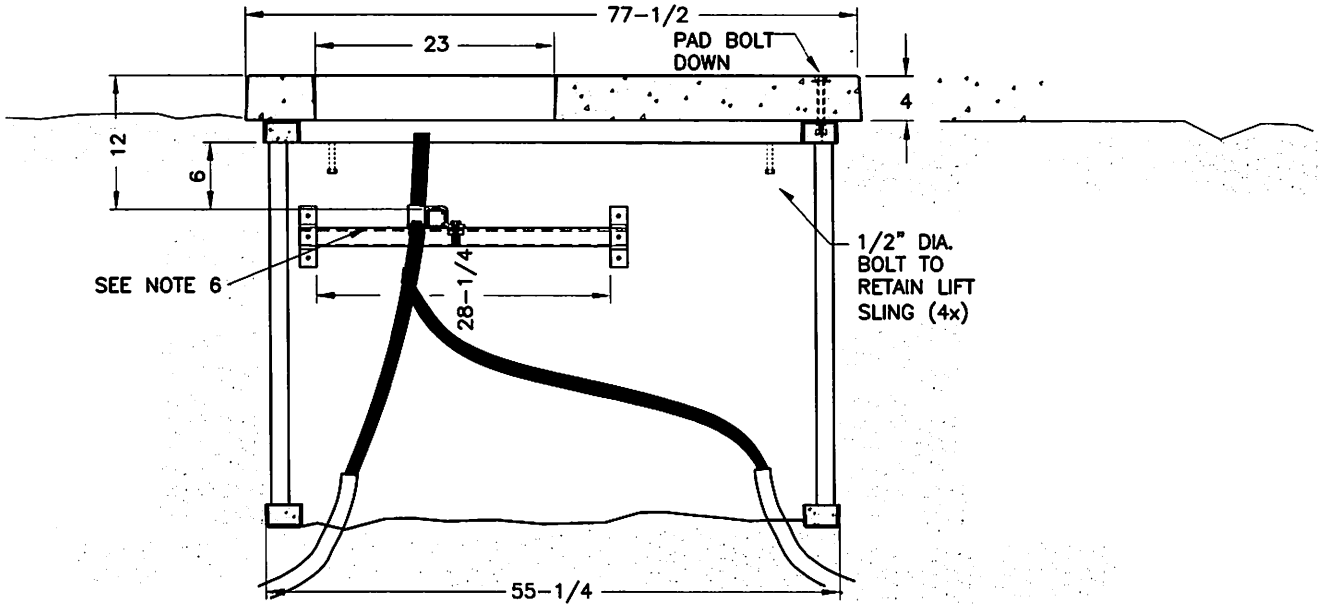

SECTION B-B: SIDE VIEW OF PAD AND CHAMBER

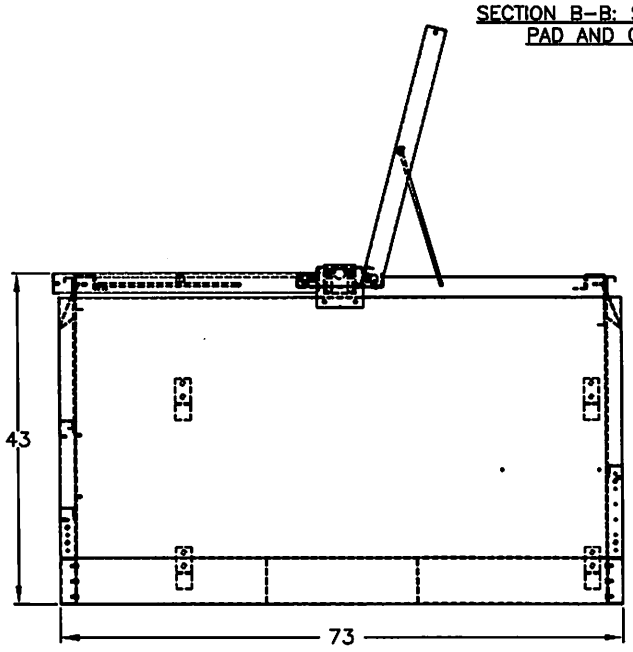

SWITCH ENCLOSURE SIDE VIEW

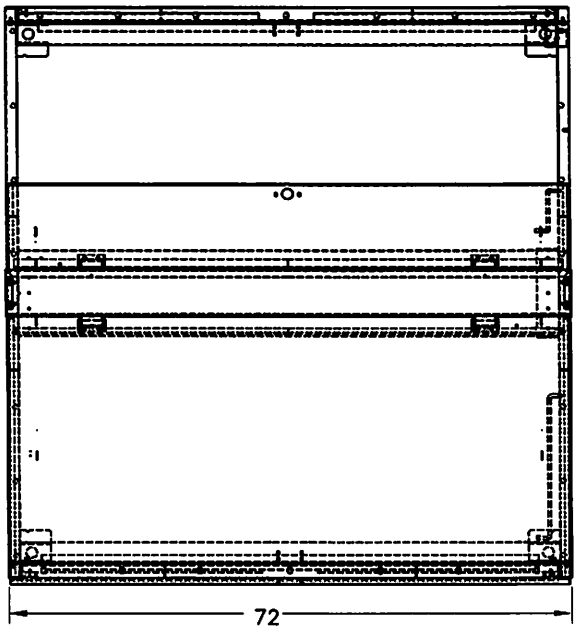

SWITCH ENCLOSURE TOP VIEW

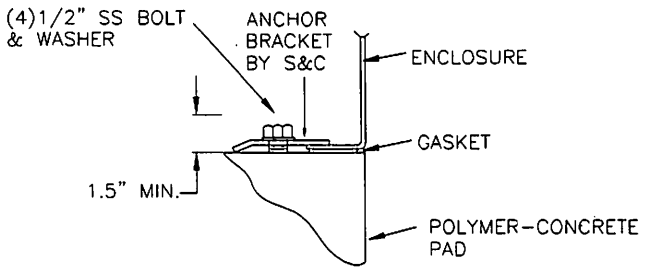

ENCLOSURE ANCHOR DETAIL

F P L

OH & UG DISTRIBUTION SYSTEM STANDARDS

NO.	DATE	REVISION	ORIG.	DRAWN	APPR.
1	11/14/12	CHANGE C-46.0.1 TO C-46.0.3	JGV	ELS	WM

ORIGINATOR: A. PANTOURIS

DATE: 7/27/09

APPROVED: ARI LIMA
LEAD SUPERVISOR, UG SERVICES

DRAWN BY: SCHILLING

NO SCALE

12/14/2020 10:42 AM
Exhibit 1
Page 244 of 328

C-46.0.4 TYPICAL INSTALLATION OF 25KV S&C VISTA THREE PHASE SWITCH FOR USE IN 15KV OR 23KV BELOW GRADE AND PAD MOUNTED APPLICATIONS

City of Fort Lauderdale

MATERIAL LIST

ITEM	DESCRIPTION	QUANTITY	M&S NUMBER	WMS CU
1	VISTA 422 (4 "WAYS', 2-THREE PHASE FEEDER GANG SWITCHES AND TWO-THREE PHASE, INDIVIDUALLY PROTECTED LOAD TAPS, WITH A STAINLESS STEEL ENCLOSURE	1	279-209-050	SW-VISTA-422-PAD
	VISTA 431 (4 "WAYS', 3-THREE PHASE FEEDER GANG SWITCHES AND ONE-THREE PHASE, INDIVIDUALLY PROTECTED LOAD TAPS, WITH A STAINLESS STEEL ENCLOSURE		279-211-050	SW-VISTA-431-PAD
	VISTA 440 (4 "WAYS", 4-THREE PHASE FEEDER GANG SWITCHES AND NO PROTECTED TAPS, WITH A STAINLESS STEEL ENCLOSURE		279-210-050	SW-VISTA-440-PAD
2	PAD AND CHAMBER FOR PM DF VISTA SWITCH (77"X 79"X 40" DEEP)	1	162-690-790	PD-SW-W/CC-VISTA
3	600 AMP T-BODY ELBOWS	VARIES	163-639-101	TM-PDF-600-1K
4	200 AMP BUSHINGS (25KV)	VARIES	163-864-001	SW-PD-BSH
5	200 AMP LOADBREAK ELBOWS (25KV)	VARIES	163-502-001	TM-PDF-1/0
6	PROTECTIVE CAP (15KV ONLY)	VARIES	163-022-000	TM-PDF-GC
7	ELBOW SURGE ARRESTERS (25KV ONLY)	VARIES	334-015-005	TM-PDF-LA
8	GROUND ROD CONNECTOR, CLAMP TYPE	1	120-036-106	DG-CLP-5/8
9	GROUND RODS, AS NEEDED	VARIES	130-614-005	DG-PKG-5/8
10	GROUND ROD COUPLINGS	VARIES	130-405-104	DG-C-5/8
11	#4 COPPER WIRE, SDB	6	112-309-000	SW-PMD-GC (Qty - 1)
12	#4/0 CU CABLE, 600V	27	110-101-169	
13	#4/0 CABLE CONNECTORS	6	120-871-005	
14	COPPER TO COPPER BOLTED CONNECTORS	22	102-800-002	
15	STANDARD LOCKS	2	546-246-011	SW-PMD-LOCK
16	CABLE MOUNTING BRACKET, STAINLESS	12	160-310-000	SW-VISTA-MT-HDW
17	BOLTS, SS, 1/2"X 1-1/2" FOR CABLE BRACKET		140-515-557	
18	SPRING, NUTS, SS, FOR 1/2" BOLT FOR CABLE BRACKET		161-463-000	
19	LOCK WASHER, 1/2", FOR CABLE BRACKET		145-294-010	
20	800 AMP FAULT INDICATOR	VARIES	163-297-009	P-CL-FCI-800
21	ROTATABLE FEEDTHRU DEVICE, 200AMP, 25KV	6	163-250-002	SW-VISTA-422-PAD
		3	163-250-002	SW-VISTA-431-PAD

NOTES:
1. THE INTERRUPTERS MUST BE PRE-SET BY THE ERC PRIOR TO BEING ISSUED TO THE JOB. CALL 863-4921 OR 863-4900 TO MAKE ARRANGEMENTS.
2. THE PAD MOUNTED VISTA SWITCH MAY BE INSTALLED IN AREAS SUBJECT TO FLOODING.
3. SEAL THE INCOMING DUCTS PER UN-29.0.0.
4. THE SWITCH AND ITS ENCLOSURE MUST BE BOLTED TO THE PAD.
5. REFER TO DCS UH-41.0.1 FOR PROPER INSTALLATION OF 600 AMP T-BODY ELBOWS.
6. BOTH THE FEEDER CABLES AND LOOP SIDE CABLES ARE TO BE RACKED THROUGH THE CABLE SUPPORT BRACKETS INSTALLED ON THE UNISTRUT IN THE CABLE CHAMBER.
7. CABLES MUST NOT BE IN CONTACT WITH THE CABLE CHAMBER OR PAD TOP.
8. ALLOW SUFFICIENT LENGTH OF CONCENTRIC NEUTRAL TO REACH GROUNDING BARS AND PERMIT THE FREE MOVEMENT OF THE ELBOWS.
9. MAKE CERTAIN OF CABLES LOCATIONS BEFORE DRIVING GROUND RODS.
10. APPLY CAULKING COMPOUND TO THE SEAM BETWEEN THE ENCLOSURE AND THE PAD TOP.
11. DUST CAPS USED FOR COVERING BUSHINGS AND BUSHING WELLS DURING SHIPMENT MUST BE REMOVED PRIOR TO ENERGIZING THE SWITCH.
12. UNUSED LOAD TAPS MUST HAVE BUSHINGS AND PROTECTIVE CAPS INSTALLED.
13. UNUSED FEEDER POSITIONS MUST HAVE 600 AMP PROTECTIVE CAPS INSTALLED (M&S #163-645-007).
14. AFTER THE SWITCH ENCLOSURE HAS BEEN INSTALLED, THE LIFTING BRACKETS MUST BE REMOVED AND STORED INSIDE THE ENCLOSURE FOR FUTURE USE.
15. ENSURE THAT THE WARNING LABEL (M&S #548-560-104) IS INSTALLED ON BOTH THE CABLE COMPARTMENT AND THE OPERATOR SIDES OF THE ENCLOSURE.
16. INSTALL FEEDER CONDUITS AS SHOWN IN C-46.0.0 AND C-46.0.2 ON LEFT AND/OR REAR SIDE OF CABLE CHAMBER TO ALLOW FOR BENDING RADIUS OF CABLE.
17. BOLTS FOR SECURING PAD TO CHAMBER ARE INCLUDED FROM VENDOR. THERE ARE 4 BOLTING LOCATIONS AS SHOWN ON DRAWINGS.
18. INSTALL 800 AMP 3Ø FAULT INDICATORS ON EACH SET OF FEEDER CABLES. SEE UV-14.0.0, UV-14.0.1, & UV-14.0.2.
19. FOR PAD MOUNTED APPLICATIONS, THE BASE BRACKETS ("FEET"). "N" AS SHOWN IN C-46.0.1 ARE REQUIRED.
20. THE BASE BRACKETS ARE NOT REQUIRED FOR BELOW GRADE ("UNDER-COVER") APPLICATIONS, BUT SHOULD BE KEPT WITH THE SWITCH IN THE POSSIBLE EVENT OF FUTURE RE-USE IN A PAD MOUNTED APPLICATION.
21. INSTALL ROTATABLE FEED-THRU DEVICE ON THE LOAD SIDE OF THE VISTA SWITCH (M&S #163-250-002)

NO.	DATE	REVISION	ORIG.	DRAWN	APPR.
4	4/4/19	UPDATE LINE 3	AXR	ELS	RDH
3	2/18/19	UPDATE TABLE	AXR	ELS	RDH
2	11/14/12	UPDATE NOTES 16 AND 19 ADD NOTE 21 AND ITEM 21	JGV	ELS	WM
1	12/14/2010	UPDATE ITEM 16	GAP	ELS	BXN

FPL

OH & UG DISTRIBUTION SYSTEM STANDARDS

ORIGINATOR: A. PANTOURIS DRAWN BY: F. SCHILLING

DATE: 9/1/03 APPROVED: ARI LIMA LEAD SUPERVISOR, UG SERVICES

UX-232.0.0

AIRCRAFT MANHOLE FRAME AND COVER
M&S #161-041-007

UX-232.0.0

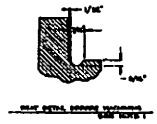

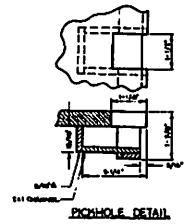

PICKHOLE DETAIL

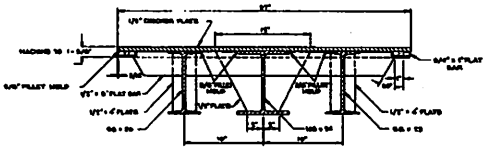

SECTION A-A

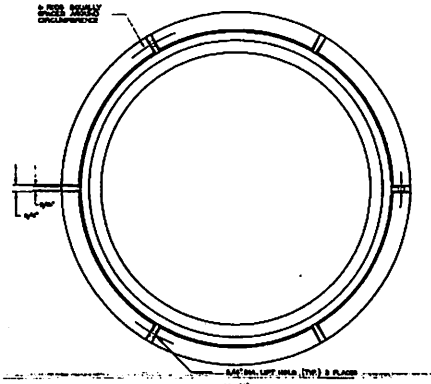

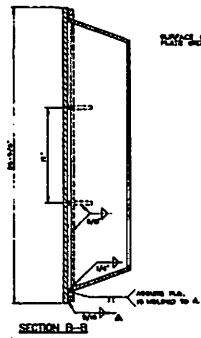

SECTION B-B

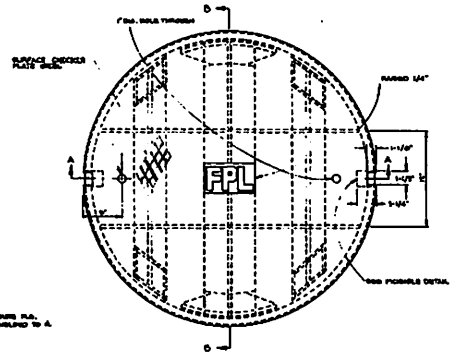

COVER

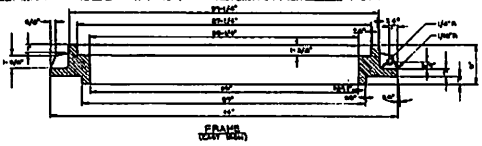

FRAME

NOTES:
1. BEARING SURFACES OF COVER AND OF FRAME WHERE IT CONTACTS MUST BE GROUND TRUE TO PREVENT RATTLING OF COVER.
2. 3" HIGH FPL LETTERS IN CENTER TO BE BEAD WELDED ON GROUND FLUSH CHECKER PLATE.
3. PICKHOLE SHALL BE 1-5/16" DEEP.
4. WELDS SHALL BE CONTINUOUS ALL AROUND EXCEPT AS NOTED.
5. SPECIFICATIONS FOR FRAME CASTING:
   CASTINGS SHALL BE OF UNIFORM QUALITY, FREE FROM BLOWHOLES, HARD SPOTS, SHRINKAGE DISTORTION, CRACKS, OR OTHER DEFECTS. THEY SHALL BE SMOOTH, WELL CLEANED BY SHOT BLASTING AND COATED WITH A COAL TAR PITCH VARNISH WHICH WILL RESULT IN A SMOOTH COATING, TOUGH AND TENACIOUS WHEN COLD, NOT TACKY WHEN HOT.
   THE MATERIAL USED IN THE MANUFACTURE OF THESE CASTINGS SHALL BE ASTM CLASS 30 GRAY IRON, MINIMUM TENSILE STRENGTH 30,000 LBS. PER SQUARE INCH, AND SHALL CONFORM WITH ASTM SPECIFICATION A-48-64.
   ALL CASTINGS SHALL BE MANUFACTURED TRUE TO PATTERN: COVERS & FRAMES SHALL FIT TOGETHER IN A SATISFACTORY MANNER. ALL BEARING SURFACES SHALL BE MACHINED TO PREVENT ROCKING & RATTLING UNDER TRAFFIC.
6. APPROX. TOTAL WEIGHT 750 LBS.
7. REFER TO UX DRAWING UX-225.0.0, FOR SPECIAL (AIRCRAFT) 2-WAY 7'-6" MANHOLE, M&S #162-237-002.
8. MANHOLE AND COVER RATED AT 250,000 LBS.

NO.	DATE	REVISION	ORIG.	DR.	APP.
2	1/12/15	UPDATED NOTES	ARR	ELS	RDH
1	9/13/14	ADDED NOTES	ARR	ELS	RDH

FLORIDA POWER & LIGHT COMPANY

DRAWN: EJ | DATE: 7/15/68 | APPROVED: JJ McEVOY

NO SCALE

SUPERVISOR, OH/UG PRODUCT SUPPORT SERVICES

UX-223.0.0	MANHOLE, 2 WAY, 8'2" PANEL M&S #162-236-006	UX-223.0.0

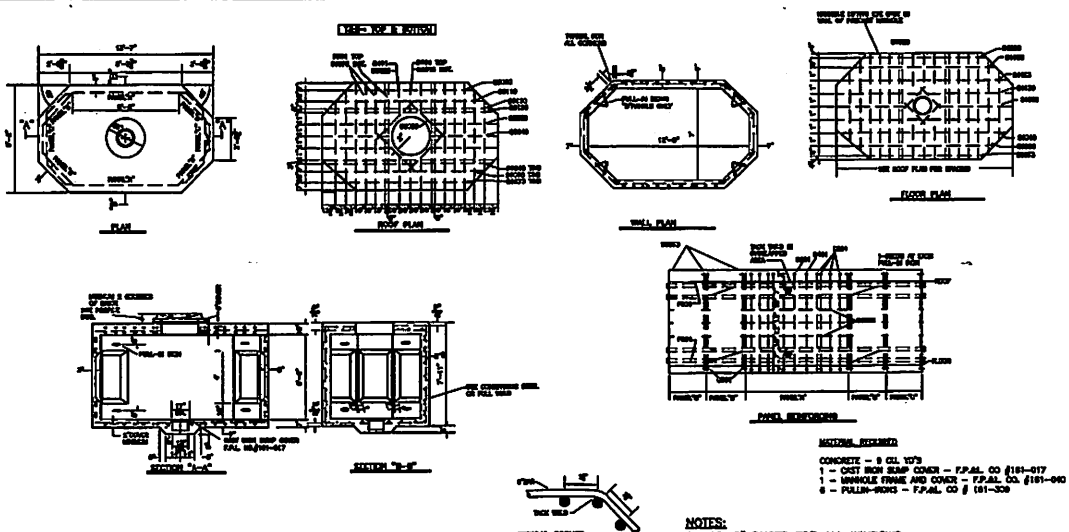

NOTES:
1. 12-6" DUCTS FOR ALL WINDOWS.
2. 2"X4" CONSTRUCTION JOINTS REQUIRED WHEN POUR IS NOT CONTINUOUS. BOTTOM CONSTRUCTION JOINT WILL NOT BE PERMITTED IN PRECAST MANHOLE.
3. FOR CONSTRUCTION SPECIFICATIONS SEE FORM-903
4. FULL BAR WELD MAY BE SUBSTITUTED INSTEAD OF 24DIA. LAPP BARS.
5. PULL-IN-IRONS-F.P.&L. CO. #161-309.
6. 5000LB. TEST CONCRETE
7. PRECAST MANHOLE SHALL BE DELIVERED IN ONE PIECE.
8. WEIGHT = 35,000LBS.
9. RATING = H20 LOADING

TWO WAY MANHOLE
M&S 162-236-006
APPROX. WEIGHT: 35,000 LBS.

FLORIDA POWER & LIGHT COMPANY

NO.	DATE	REVISION	ORIG.	DR.	APP.
6	9/4/16	ADD NOTE 9	ARR	ELS	RDH
5	8/21/13	ADD NOTE 8	ARR	ELS	RDH
4	3/4/13	UPDATE TITLE	ARR	ELS	RDH
3	6/23/14	UPDATE DRAWING	ARR	ELS	RDH
2	3/25/08	UPDATE DRAWING AND ADD NOTES	GAP	ELS	JJM
1	2/26/08	VECTORIZE DRAWING	GAP	ELS	JJM

ORIG. _____ NO SCALE APPROVED
DRAWN: J.R. GARCIA DATE: _____
DIRECTOR, DISTRIBUTION ENGINEERING AND OPERATIONS SERVICES

UX-219.0.0

MANHOLE, 2 WAY 7'-8" PANEL
M&S #162-235-000

UX-219.0.0

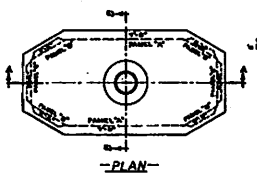

—PLAN—

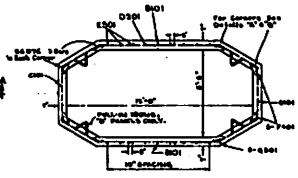

—WALL PLAN—

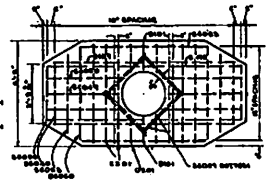

—ROOF PLAN—

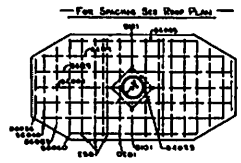

—FLOOR PLAN—

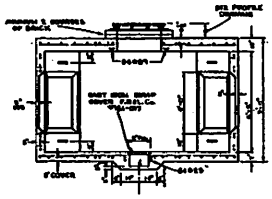

—SECTION A-A—

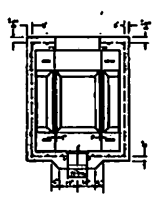

—SECTION B-B—

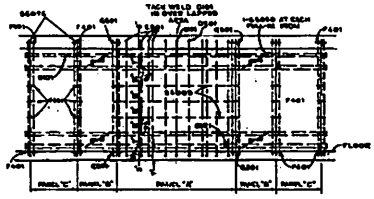

—PANEL REINFORCING—

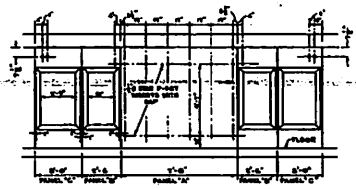

—LOCATION OF INSERTS AND DUCT ENTRANCES—

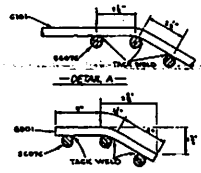

—DETAIL A—

—G502 DETAIL—

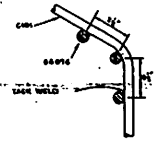

—DETAIL B—

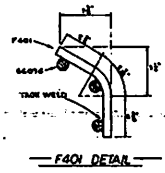

—F401 DETAIL—

NOTES:
1. APPROXIMATE TOTAL WEIGHT - 32,200LBS.
2. RATING = H20 LOADING

NO.	DATE	REVISION	ORIG.	DR.	APP.
4	8/4/16	ADD NOTE	ARR	ELS	RDH
3	8/21/15	ADD NOTE	ARR	ELS	RDH
2	3/4/15	UPDATE TITLE	ARR	ELS	RDH
1	7/1/03	ADD M&S NO. & WEIGHT			

FLORIDA POWER & LIGHT COMPANY

NO SCALE

DRAWN: KB

DATE: 3/25/70

APPROVED: J.J McEVOY
SUPERVISOR, CH/UG PRODUCT SUPPORT SERVICES

UX-225.0.0

SPECIAL PRECAST - TWO WAY 7'-8" MANHOLE
M&S #162-237-002
APPROXIMATE TOTAL WEIGHT - 66,200 LBS.

UX-225.0.0

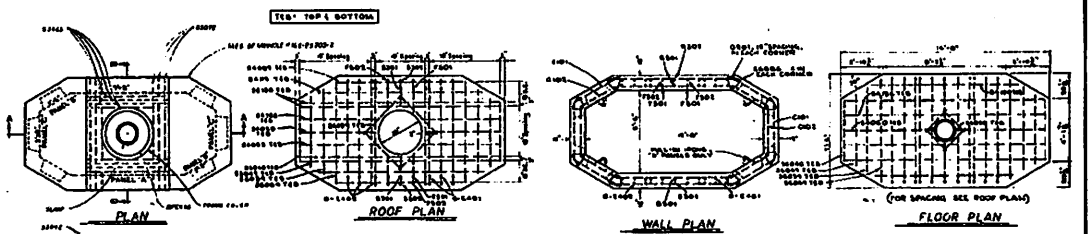

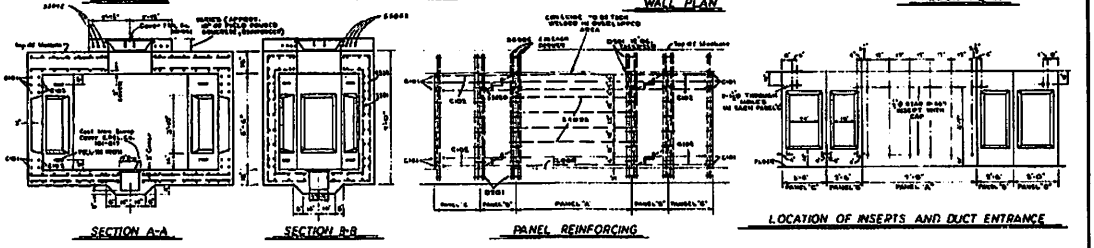

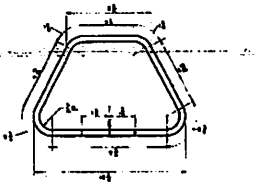

D201 - #5 - 72 Req'd - 21'7" Long

NOTES:
1. AIRCRAFT MANHOLE FRAME & COVER M&S #161-041-007, REFER TO UX DRAWING UX-232.0.0.
2. MANHOLE AND COVER RATED AT 300,000 LBS.
3. CAST IRON SUMP COVER, REFER TO UX-520.0.0
4. REINFORCING SCHEDULE, REFER TO UX-226.0.0

NO.	DATE	REVISION	ORIG.	DR.	APP.
3	8/13/14	ADDED M&S NUMBER & WEIGHT	ARR	ELS	RDH
2	7/1/83	ADDED M&S NUMBER & WEIGHT			
1	6/2/82	ADD REINF SS272 & CORNER MODIFICATION			

NO SCALE

DRAWN: KRB

DATE: 1-29-70

APPROVED: J.J McEVOY
SUPERVISOR, GH/UG PRODUCT SUPPORT SERVICES

Installation:

Guidelines for installing your Quazite® enclosure vary depending on size, location, and environmental factors. Quazite® enclosures are designed for non-deliberate traffic areas only.

Small Enclosure Installation



1 Excavation

Excavate approximately 6 inches deeper than the depth of the enclosure. Add 6 inches of gravel or crushed rock for drainage.



2 Placement

Carefully lower enclosure into the hole until the top is at grade level.

3 Filling

Fill and compact the soil to grade level with the cover on the enclosure.

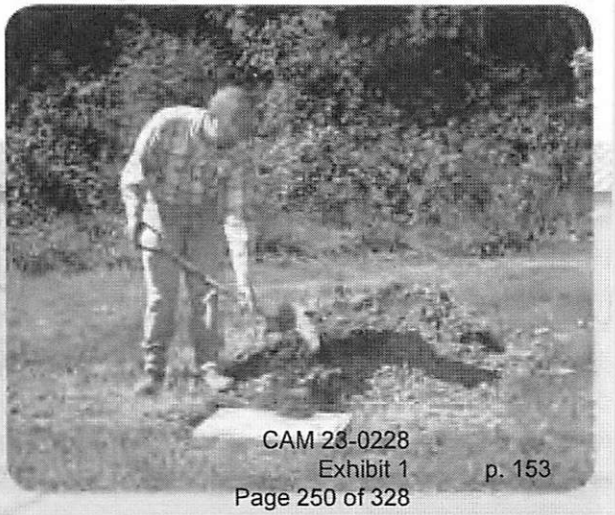

4 Adjustment

If the grade level is raised later, a straight-sided enclosure can be pulled up and bricks added at the bottom on one or four sides to conform to the landscape.

comcast

Underground Specifications

Small / Pedestal Placement

- Pedestals can be placed at the time the conduit is installed.
- • Pedestals must be secured with a pedestal stake.
- • Conduit will be used secure and protect the cable in the underground environment. Conduit will be used to transition from the underground plant for above ground access.
- o Conduits will be placed in the pedestal with the conduit 4" (minimum) above the finished grade.
- o Sweeps will not be less than a 36" radius.
- o Cable not present, the conduit will be capped.
- o Cable present, the conduit ends will be sealed with a foam fill.

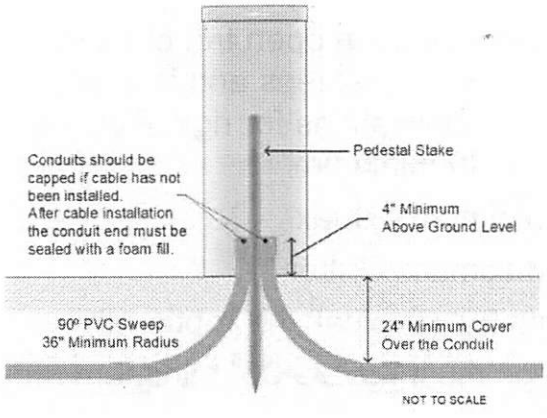

Conduit / Duct

Most underground environments are extreme environments. Conduit and duct systems are used to protect cables from objects that might be present in the trench or plow line. These objects may be of concern during trench excavation or plowing, or they may be of long-term concern due to frost heave or ground movement.
Conduit and duct systems are used to provide flexibility with pulling additional cables into place, making repairs to, or replacing cables that exist inside the duct system. Conduit, when properly installed will provide years of protection for the cables inside guarding against rocks, rodents, dig-ins and backhoe fades.

Comcast

Underground Specifications

The pathway provided by conduit can facilitate replacement and upgrade projects or future installations of additional cable or duct.
Comcast uses four main types of ducts utilized in coaxial underground construction. Each is made from Polyethylene (PE):

- • PVC Rigid Conduit
- • High Density Polyethylene (HDPE) Flexible Conduit
- o Smooth wall
- o Ribbed
- o Corrugated
- • Medium Density Polyethylene (MDPE) Inner Duct
- • Cable in Conduit (CIC)

Rigid Conduit
Rigid conduit is typically placed in open trenches to protect coaxial cable. It is sold in straight sections and sweeps and is available in multiple wall thicknesses. Comcast specifications for rigid PVC are:

- • PVC - Schedule 40 minimum
- • Diameter 2" Minimum - Coax
- • Diameter 4" Maximum - Fiber
- • Conduit Length 20' (Typical) 10' (optional)
- • Conduit sweeps must have a 36" minimum radius

In harsher environments schedule 80 duct may be used. It has similar characteristics to schedule 40. The major difference is thicker walls and additional external load capability

90-degree transitions are NOT approved for use in Comcast underground construction.

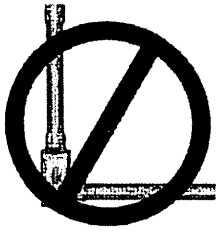

Rigid Conduit Sweeps are available in 90°, 45°, 30°, 22.5° and 11.25°.

Comcast

Underground Specifications

Existing Conduit "Y" to New Conduit
In this example a new conduit must intercept an existing conduit. "Y" connectors are available in two types a one piece "Y" for new conduits and a split "Y" for existing conduits.
To run a lateral, a "Y" connection can be used if the following are observed.

- • Determine if the existing conduit has active cables.
- • Determine the point that the existing conduit is to be intercepted.
- • Excavate to the existing conduit.
- • Splitting the conduit must be done with extreme care.
- • Install a "Split Y" adapter sized for the installed conduit.
- • Install a conduit bend that is not less than a 36" minimum radius.
- • New conduit must be joined to the existing conduit.
- • Provide a pull line through the new conduit extending back to where the cable will be pulled from. Do not disturb a pull line in the existing conduit.
- • All conduit connections must be watertight.
- • A vault over the Y connection is optional.
- • Conduit connection must be sealed to prevent water and soil ingress.

The following diagram illustrates the Split "Y" conduit join. It is used to split an existing conduit at a designated intercept point.

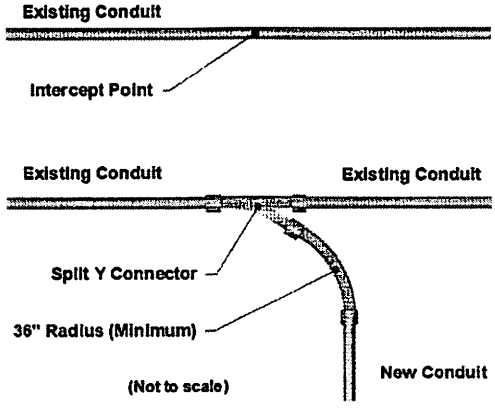

comcast

Underground Specifications

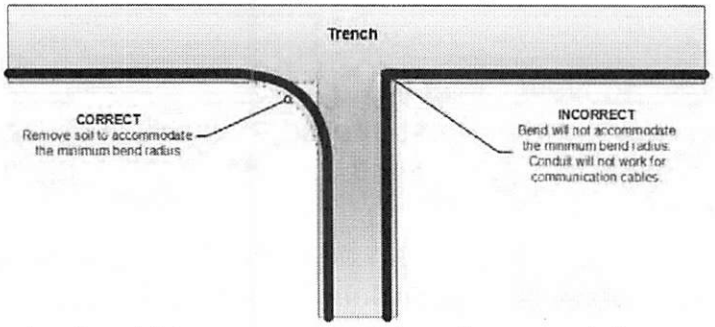

- • The trench should be excavated to allow a minimum depth of 24 inches to the top of the conduit.
- • Radial separation to other joint-use utilities is 12 inches in well tamped earth.

Note: Lesser separations may be used where the joint-use parties agree.

- • Highways, streets, bridges, tunnels and railroads may require deeper conduit depths

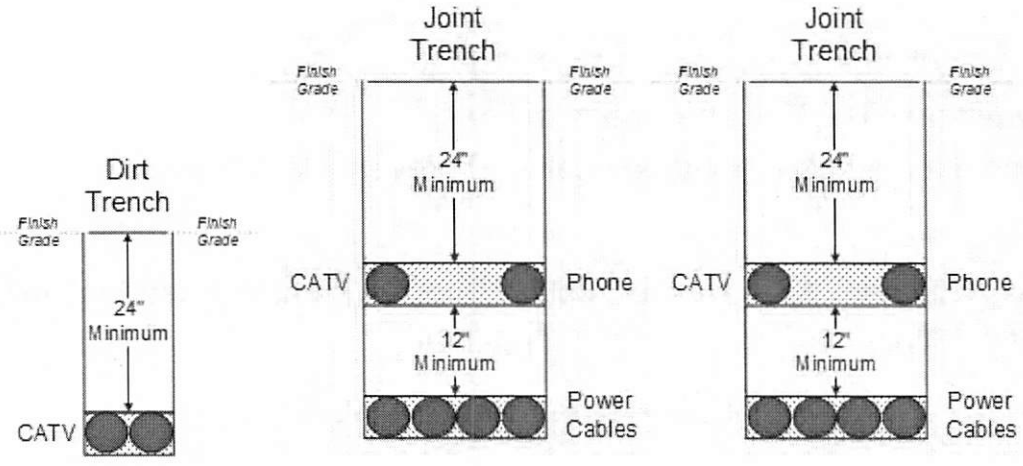

Coaxial cables are pulled into place by applying force to the end of the cable. Excessive forces applied to the cables will cause the cables to permanently elongate. Deformations of the conductor geometry causes an impedance change in coaxial cable. Connector installation will be difficult and is not recommended.

Pulling tension for all cable types are specified in the vendor data sheets.

Comcast

Underground Specifications

Cable		Maximum Pulling Tension
QR 320	120 lbs.	54.5 kgf
QR 540	220 lbs.	100. kgf
QR 715	340 lbs.	154. kgf
QR 860	450 lbs.	204. kgf
P3 500	300 lbs.	136. kgf
P3 625	475 lbs.	216. kgf
P3 750	675 lbs.	306. kgf
P3 875	875 lbs.	397. kgf
MO500	270 lbs.	123 kgf
MO650	360 lbs.	164 kgf
MO750	500 lbs.	237 kgf

Preferred Conduit – 2" for Coax and 4" for Fiber.
When both coax and fiber are in same trench a 2" and 4" separate conduits need to be placed.

Flexible Conduit
High Density Polyethylene (HDPE), Flexible Conduit
HDPE conduit can be installed below ground by a variety of methods, including open trench, plowing, continuous trenching and directional drilling. Installation into existing conduit systems is facilitated by the continuous coiled lengths conduit.

- • Flexible conduit is wound onto reels up to several thousand feet long
- • No manufactured bends are used in the installation, i.e. sweeps.
- • Can be navigated around unexpected obstructions (in the ground or within existing ducts).
- • Flexible conduit is reliably joined through a few splicing options.

Flexible conduit can be in the following configurations;

- • Multiple ducts of different color/stripe combinations and sizes can be delivered on one common reel based on the project requirements.
- • Corrugated innerduct, flexible, lightweight with a low coefficient of friction.
- • Ribbed conduit (longitudinally or spiral), provides friction reduction in cable installation.

Bending Radius

Comcast

Underground Specifications

Cables and innerducts are often routed around corners. Routing around a corner, pulling tension must be increased to apply adequate force for the cable or innerduct to follow the bend. Tension is directly related to the size of the cable or innerduct which correlates to the flexibility of the pulled object.

Static Bending Radius

The static bending radius of coaxial cable is the minimum bending radius that a cable can be formed without electrical or mechanical degradation of the cable. The cable is not normally under as much tension or load as when being pulled through a conduit or duct. Static bending of the cable in this manner is usually only done during splicing or final forming of the cable.

Dynamic Bending Radius

The radius of the bend in the cable as it is being pulled is the dynamic bending radius. In this state the cable is under tension or loaded.

Always review the specifications for the appropriate bend radius. If the minimum bend radius or the maximum pulling tension is not exceeded, a successful installation will result.

- • The bending radius of cables during the construction process are controlled by the radius of the bends in duct or conduit as well as construction techniques and equipment.
- • Conduit bends, cable sheaves, plow shares and cable shoes should have large radius bends and low friction surfaces that minimally contribute to the increase in pulling tension that is required to pull the cable through this equipment.

comcast

Underground Specifications

MAPS

N

Project Location

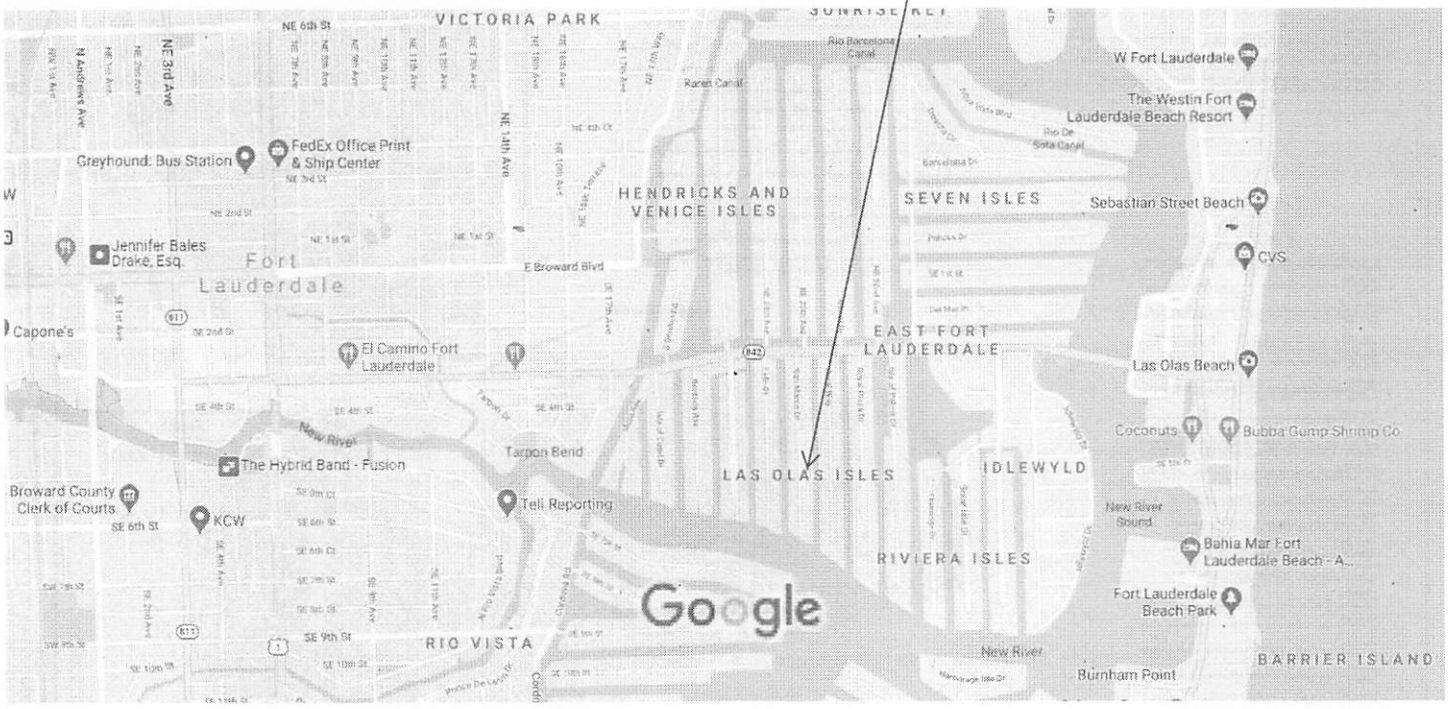

AREA: A

AREA: B

AREA: C

NOT FOR CONSTRUCTION OR BID

CITY OF FORT LAUDERDALE
PUBLIC WORKS DEPARTMENT
ENGINEERING & ARCHITECTURE

PROJECT # P11715
LAS OLAS COMMUNITIES
UNDERGROUND UTILITY PLANNING
SERVICE AREA
LAS OLAS

CITY OF FORT LAUDERDALE

OFFICE OF THE CITY ENGINEER

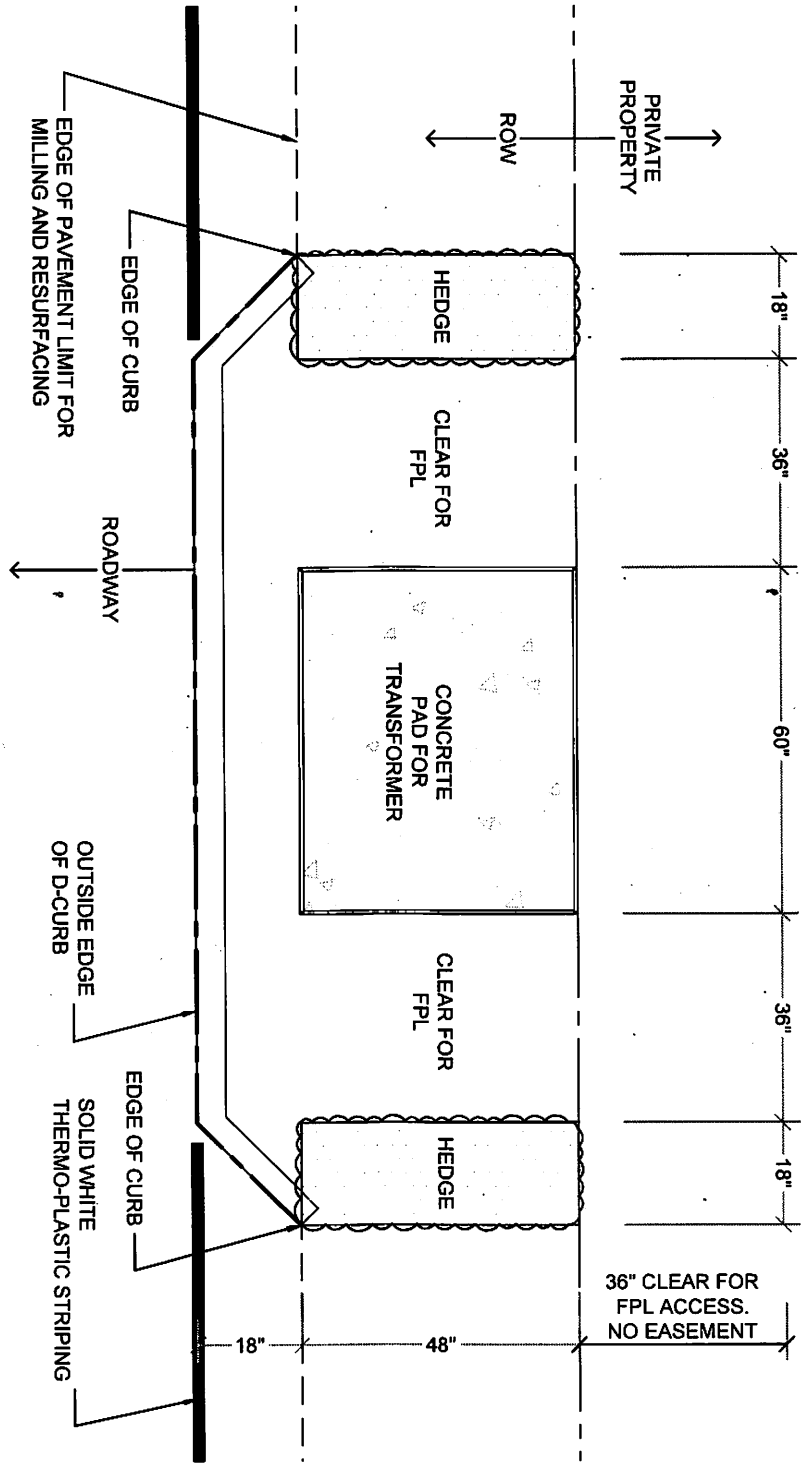

PLAN

DATE: Aug–20	SCALE: APPROXIMATE 3/8"=1'–0"	LOCATION OF CONCRETE PAD FOR TRANSFORMER WITHIN ROW WITH NO EASEMENT	LS
REVISED: Aug–20	DRAWN BY: B.H.	TOP ELEVATION OF CONCRETE PAD VARIES	XX

MINIMUM 3.5' NAVD OR 12" ABOVE ROAD WHICHEVER IS GREATER

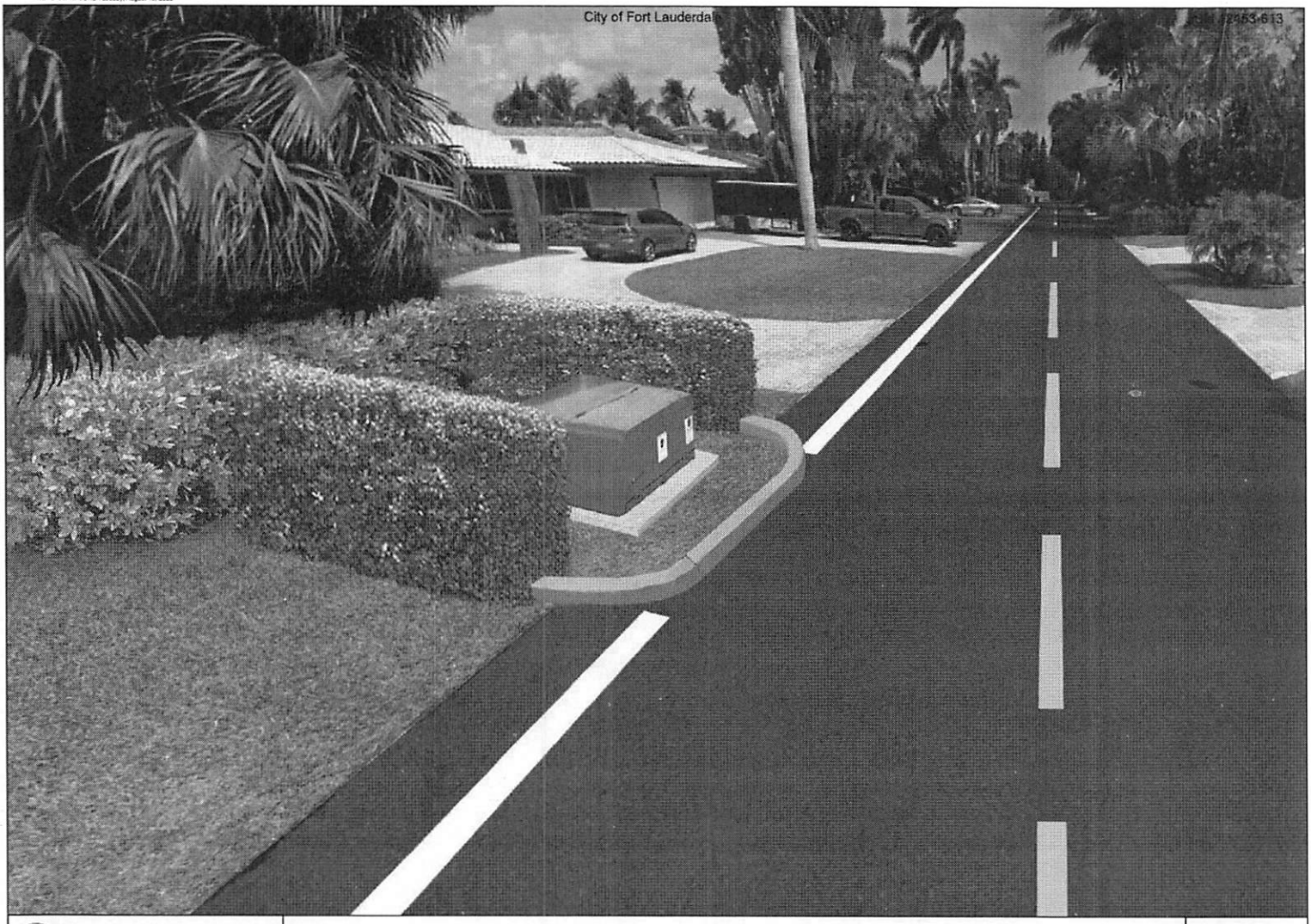

CITY OF FORT LAUDERDALE
PUBLIC WORKS DEPARTMENT
ENGINEERING DETAILS
100 N. Andrews Avenue, Fort Lauderdale, Florida 33301

Photosims for Transformer Pads
Within ROW with No Easement
(Typical)

DETAIL NO.
ROAD
D2

REVISED:
2020/08/18

12/14/2020 10:42 AM

CITY OF FORT LAUDERDALE

OFFICE OF THE CITY ENGINEER

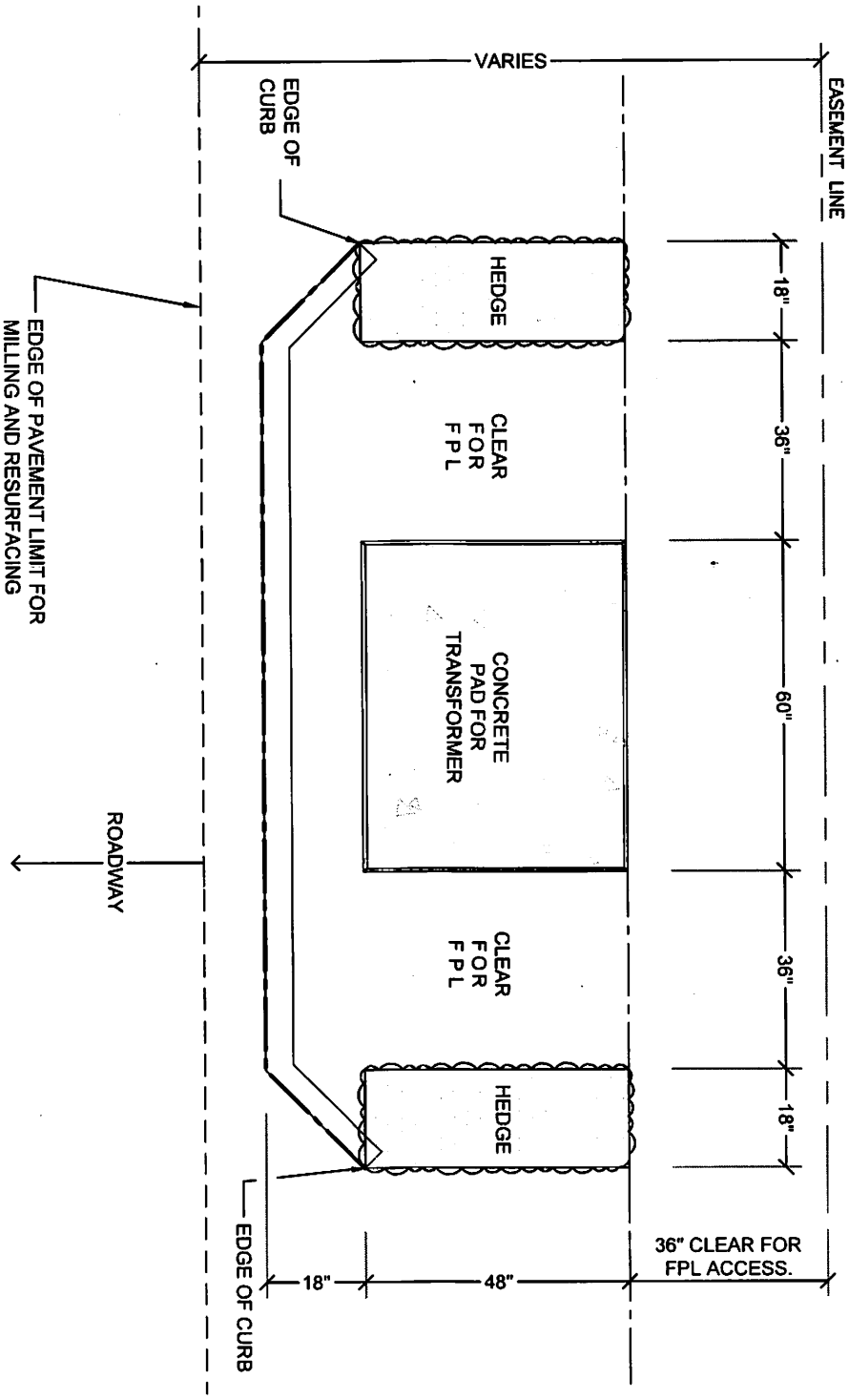

PLAN

DATE: Aug-20	SCALE: 3/8"=1'-0"	APPROXIMATE LOCATION OF CONCRETE PAD FOR TRANSFORMER WITHIN ROW AND EASEMENT	LS XX
REVISED: Aug-20	DRAWN BY: B.H.	TOP ELEVATION OF CONCRETE PAD VARIES	

MINIMUM 3.5' NAVD OR 12" ABOVE ROAD WHICHEVER IS GREATER



CITY OF FORT LAUDERDALE
PUBLIC WORKS DEPARTMENT
ENGINEERING DETAILS
100 N. Andrews Avenue, Fort Lauderdale, Florida 33301

Photosims for Transformer Pads
within ROW with Easement (Typical)

DETAIL NO.
ROAD
D3
REVISED
2020/08/18

Sheet List Table	
Sheet Number	Sheet Title
01	COVER SHEET
02	GENERAL NOTES
03	CONSTRUCTION PHASING PLAN
04	KEY MAP
05	MOLA AVE
06	MOLA AVE
07	ISLE OF CAPRI
08	ISLE OF CAPRI
09	ISLE OF CAPRI - MOLA AVE
10	BOTONA AVE
11	BOTONA AVE
12	BOTONA AVE
13	COCONUT ISLES DRIVE
14	COCONUT ISLES DRIVE
15	COCONUT ISLES DRIVE
16	LIDO DRIVE
17	LIDO DRIVE
18	LIDO DRIVE
19	LIDO DRIVE
20	SAN MARCO DRIVE
21	SAN MARCO DRIVE
22	SAN MARCO DRIVE
23	SAN MARCO DRIVE
24	CORAL WAY
25	CORAL WAY
26	CORAL WAY
27	CORAL WAY
28	ROYAL PLAZA DRIVE
29	ROYAL PLAZA DRIVE
30	ROYAL PLAZA DRIVE
31	ROYAL PLAZA DRIVE
32	ROYAL PLAZA DRIVE
33	ISLES OF PALM DRIVE
34	ISLES OF PALM DRIVE
35	ISLES OF PALM DRIVE
36	ISLES OF PALM DRIVE
37	ISLES OF PALM DRIVE
38	CONSTRUCTION DETAILS
39	FPL SUPPLEMENTARY INFORMATION
40	AT&T SUPPLEMENTARY INFORMATION
41	COMCAST SUPPLEMENTARY INFORMATION
42	FPL REFERENCE 1
43	FPL REFERENCE 2
44	FPL REFERENCE 3
45	FPL REFERENCE 4
46	FPL REFERENCE 5
47	FPL REFERENCE 6
48	FPL REFERENCE 7
49	FPL REFERENCE 8
50	FPL REFERENCE 9

CITY OF FORT LAUDERDALE

PROJECT #11715
LAS OLAS ISLES UNDERGROUNDING O/H TO U/G CONVERSION

FORT LAUDERDALE, FLORIDA

REVISIONS		
DATE	NO.	DESCRIPTION

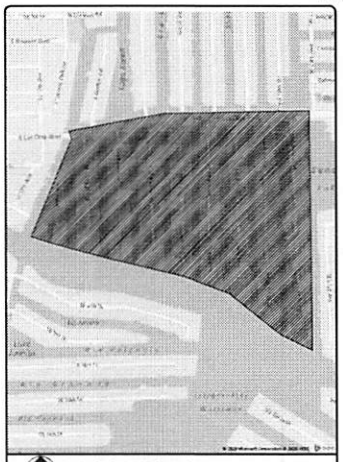

LOCATION SKETCH

PROJECT #11715
LAS OLAS ISLES UNDERGROUNDING
O/H TO U/G CONVERSION

CITY OF FORT LAUDERDALE
PUBLIC WORKS DEPARTMENT
ENGINEERING & ARCHITECTURE
100 North Andrews Avenue, Fort Lauderdale, Florida 33301

FORT LAUDERDALE CITY COMMISSION

DEAN J. TRANTALIS	MAYOR
HEATHER MORAITIS	COMMISSIONER - DISTRICT I
STEVEN GLASSMAN	COMMISSIONER - DISTRICT II
ROBERT McKINZIE	COMMISSIONER - DISTRICT III
BEN SORENSEN	COMMISSIONER - DISTRICT IV

PROJECT MANAGER	JOB TITLE	PHONE NO.
DON GETTLE	PROJECT MANAGER II	954-828-5071

DATE: 09/15/20
CAD FILE: 11715-BID-COVER
DRAWING FILE No.: 4-136-94

BID SET

GENERAL NOTES

THE LOCATION AND SIZE OF ALL EXISTING UTILITIES AND TOPOGRAPHY HAVE BEEN PREPARED FROM INFORMATION AVAILABLE TO THE ENGINEER. THIS INFORMATION IS NOT GUARANTEED AND IT IS THE CONTRACTOR'S RESPONSIBILITY TO DETERMINE THE EXACT LOCATION OF ANY EXISTING UTILITIES AND TOPOGRAPHY PRIOR TO CONSTRUCTION. THE CONTRACTOR SHALL VERIFY ALL UTILITIES, BY ELECTRONIC METHODS AND BY HAND EXCAVATION IN COORDINATION WITH ALL UTILITY COMPANIES, PRIOR TO BEGINNING ANY CONSTRUCTION OPERATIONS. THIS WORK BY THE CONTRACTOR SHALL BE CONSIDERED INCIDENTAL TO THE CONTRACT AND NO ADDITIONAL COMPENSATION SHALL BE ALLOWED.

I. APPLICABLE CODES

A. GENERAL

ALL CONSTRUCTION, MATERIALS AND TESTING SHALL CONFORM TO THE STANDARDS AND SPECIFICATIONS OF LOCAL, COUNTY, STATE AND NATIONAL CODES WHERE APPLICABLE.

WHEN ANY OF THE GOVERNING REGULATORY AGENCY'S STANDARDS AND SPECIFICATIONS ARE IN CONFLICT, THE MORE STRINGENT APPLY.

B. CONSTRUCTION SAFETY

ALL CONSTRUCTION SHALL BE DONE IN CONFORMANCE WITH THE RULES AND REGULATIONS OF THE OCCUPATIONAL SAFETY AND HEALTH ADMINISTRATION (OSHA) AND THE MANUAL OF UNIFORM TRAFFIC CONTROL DEVICES (MUTCD).

C. TRENCH SAFETY ACT

CONTRACTOR SHALL BE SOLELY RESPONSIBLE FOR COMPLIANCE WITH THE STATE FLORIDA TRENCH SAFETY ACT.

D. SURVEY DATA

ALL ELEVATIONS ON THE PLANS OR REFERENCED IN THE SPECIFICATIONS UNLESS OTHERWISE NOTED, ARE BASED ON NATIONAL GEODETIC VERTICAL DATUM OF 1929 (NGVD).

II. PRECONSTRUCTION RESPONSIBILITIES

A. THE CONTRACTOR SHALL OBTAIN A SUNSHINE STATE ONE CALL AT 811 CERTIFICATION NUMBER AT LEAST 48 HOURS PRIOR TO BEGINNING ANY EXCAVATION.

B. PRIOR TO BEGINNING CONSTRUCTION, THE CONTRACTOR SHALL VERIFY THE SIZE, LOCATION, ELEVATION, AND MATERIAL OF ALL EXISTING UTILITIES WITHIN THE AREA OF CONSTRUCTION.

C. EXISTING UTILITY LOCATIONS SHOWN ON THESE PLANS ARE APPROXIMATE. THE ENGINEER ASSUMES NO RESPONSIBILITY FOR THE ACCURACY OF EXISTING UTILITIES SHOWN OR FOR ANY EXISTING UTILITIES NOT SHOWN.

D. THE CONTRACTOR SHALL BE RESPONSIBLE FOR DAMAGE TO ANY EXISTING UTILITIES FOR WHICH HE FAILS TO REQUEST LOCATIONS FROM THE UTILITY OWNER. HE IS RESPONSIBLE AS WELL FOR DAMAGE TO ANY EXISTING UTILITIES WHICH ARE PROPERLY LOCATED.

III. INSPECTIONS

A. THE CONTRACTOR SHALL NOTIFY THE OWNER/MUNICIPAL AUTHORITY, THE ENGINEER OF RECORD AND THE COUNTY, IF APPLICABLE, AT LEAST 48 HOURS PRIOR TO BEGINNING CONSTRUCTION AND PRIOR TO THE INSPECTION OF THE FOLLOWING ITEMS:

1. CONDUIT PIPING
2. SUBGRADE – SUBMIT AND HAVE APPROVED DENSITIES PRIOR TO PLACEMENT OF ROCK.
3. LIMEROCK BASE – SUBMIT AND HAVE APPROVED DENSITIES AND AS-BUILTS PRIOR TO THE PLACEMENT OF ANY ASPHALT.
4. ASPHALTIC CONCRETE
5. FINAL INSPECTION

IV. SHOP DRAWINGS

PRIOR TO THEIR CONSTRUCTION OR INSTALLATION, SHOP DRAWINGS SHALL BE SUBMITTED TO AND REVIEWED BY THE OWNER/MUNICIPAL AUTHORITY AND ENGINEER OF RECORD FOR CONDUIT WITH ASSOCIATED STRUCTURES, INCLUDING ALL DATA. CATALOGUE LITERATURE SHALL BE SUBMITTED FOR PIPES, FITTINGS, AND APPURTENANCES.

PRIOR TO SUBMITTING SHOP DRAWINGS TO THE ENGINEER, THE CONTRACTOR SHALL REVIEW AND APPROVE THE DRAWINGS, AND SHALL NOTE IN RED ANY DEVIATIONS FROM THE ENGINEERS' PLANS OR SPECIFICATIONS.

INDIVIDUAL SHOP DRAWINGS FOR ALL PRECAST STRUCTURES ARE REQUIRED. CATALOGUE LITERATURE WILL NOT BE ACCEPTED FOR PRECAST STRUCTURES.

V. TEMPORARY FACILITIES

A. TEMPORARY UTILITIES

IT SHALL BE THE CONTRACTOR'S RESPONSIBILITY TO ARRANGE FOR OR SUPPLY TEMPORARY WATER SERVICE, SANITARY FACILITIES AND ELECTRICITY TO HIS EMPLOYEES AND SUBCONTRACTORS FOR THEIR USE DURING CONSTRUCTION.

B. TRAFFIC REGULATION

1. MAINTENANCE OF TRAFFIC IN THE PUBLIC RIGHT-OF-WAY SHALL BE IN ACCORDANCE WITH THE MUTCD.
2. ALL OPEN TRENCHES AND HOLES ADJACENT TO ROADWAYS OR WALKWAYS SHALL BE PROPERLY MARKED AND BARRICADED TO ASSURE THE SAFETY OF BOTH VEHICULAR AND PEDESTRIAN TRAFFIC.
3. NO TRENCHES OR HOLES NEAR WALKWAYS OR IN ROADWAYS OR THEIR SHOULDERS ARE TO BE LEFT OPEN DURING NIGHTTIME HOURS WITHOUT EXPRESS PERMISSION OF THE ENGINEER, OWNER/MUNICIPAL AUTHORITY AND LOCAL OR COUNTY AUTHORITY.
4. ALL CONSTRUCTION WITHIN FDOT R/W MUST CONFORM WITH FDOT SPECIFICATIONS, STANDARDS AND PERMIT REQUIREMENTS. NO WORK SHALL COMMENCE WITHIN FDOT R/W'S WITHOUT AN FDOT PERMIT. FULL LANE WIDTH RESTORATION TO MATCH EXISTING PAVEMENT SECTION IS REQUIRED IN ACCORDANCE WITH STANDARDS FOR PROPOSED WORK WITHIN FDOT R/W.
5. CONTRACTOR SHALL PREPARE AND SUBMIT MAINTENANCE OF TRAFFIC PLAN (MOT) WHERE REQUIRED BY FEDERAL, STATE, COUNTY OR LOCAL AGENCIES HAVING JURISDICTION. CONTRACTOR SHALL OBTAIN ALL REQUIRED APPROVALS AND PERMITS ASSOCIATED WITH THE MOT'S. ALL MOT'S TO BE ATSSA CERTIFIED.

VI. PROJECT CLOSEOUT

A. CLEANING OUT

1. DURING CONSTRUCTION, THE PROJECT SITE AND ALL ADJACENT AREAS SHALL BE MAINTAINED IN A NEAT AND CLEAN MANNER. UPON FINAL CLEAN UP, THE PROJECT SITE SHALL BE LEFT CLEAR OF ALL SURPLUS MATERIAL OR TRASH. THE PAVED AREAS SHALL BE SWEPT BROOM CLEAN AS DIRECTED BY THE ENGINEER.
2. THE CONTRACTOR SHALL RESTORE OR REPLACE, WHEN AND AS DIRECTED BY THE ENGINEER OR OWNER/MUNICIPAL AUTHORITY, ANY PUBLIC OR PRIVATE PROPERTY DAMAGED BY HIS WORK, EQUIPMENT, EMPLOYEES OR THOSE OF HIS SUBCONTRACTORS TO A CONDITION AT LEAST EQUAL TO THAT EXISTING IMMEDIATELY PRIOR TO THE BEGINNING OF OPERATIONS. TO THIS END, THE CONTRACTOR SHALL DO AS REQUIRED ALL NECESSARY HIGHWAY OR DRIVEWAY, WALK, IRRIGATION AND LANDSCAPING WORK. SUITABLE MATERIALS AND METHODS SHALL BE USED FOR SUCH RESTORATION.
3. WHERE MATERIAL OR DEBRIS HAS WASHED OR FLOWED INTO OR BEEN PLACED IN WATER COURSES, DITCHES, DRAINS, CATCH BASINS, OR ELSEWHERE AS A RESULT OF THE CONTRACTOR'S OPERATIONS, SUCH MATERIAL OR DEBRIS SHALL BE REMOVED, SATISFACTORILY DISPOSED OF DURING PROGRESS OF THE WORK, AND THE AREA KEPT IN A CLEAN AND NEAT CONDITION AS DIRECTED BY THE ENGINEER.
4. CONTRACTOR SHALL DISPOSE OF ALL SITE DEMOLITION IN ACCORDANCE WITH STATE AND LOCAL REGULATIONS.

B. PROJECT RECORD DOCUMENTS

1. THE CONTRACTOR SHALL MAINTAIN ACCURATE AND COMPLETE RECORDS OF WORK ITEMS COMPLETED.
2. PRIOR TO THE PLACEMENT OF ANY ASPHALT OR CONCRETE PAVEMENT, THE CONTRACTOR SHALL SUBMIT TO THE ENGINEER "AS-BUILT" PLANS SHOWING LIMEROCK BASE GRADES, AND ALL UTILITY IMPROVEMENTS. PAVING OPERATIONS SHALL NOT COMMENCE UNTIL THE ENGINEER AND THE APPROVING AGENCY HAS REVIEWED THE "AS-BUILTS".
3. ALL REQUIRED DENSITY AND LBR TEST RESULTS FOR SUBGRADE SHALL BE PROVIDED TO THE ENGINEER AND THE OWNER/MUNICIPAL AUTHORITY PRIOR TO PLACING LIMEROCK BASE MATERIAL.
4. ALL REQUIRED DENSITY AND LBR TEST RESULTS FOR LIMEROCK SHALL BE PROVIDED TO THE ENGINEER AND THE OWNER/MUNICIPAL AUTHORITY PRIOR TO PLACING ASPHALT.
5. ALL "AS-BUILT" INFORMATION SUBMITTED TO THE ENGINEER SHALL BE SUFFICIENTLY ACCURATE, CLEAR AND LEGIBLE TO THE SATISFACTION OF THE ENGINEER THAT THE INFORMATION PROVIDES A TRUE REPRESENTATION OF THE IMPROVEMENTS CONSTRUCTED.
6. AS PART OF THE PROJECT CLOSEOUT REQUIREMENTS, CONTRACTOR IS TO PROVIDE AS-BUILTS OF ALL INSTALLED PROPOSED CONDUITS. CROSSING LOCATIONS BETWEEN ALL PROPOSED OR EXISTING UTILITIES MUST CLEARLY SHOW TOP AND BOTTOM OF PIPE ELEVATIONS AND CLEARANCE DISTANCE BETWEEN THE UTILITIES ON AS-BUILTS. TO ENSURE PROPER COVER IS MET, AS-BUILTS SHALL INDICATE TOP OF PIPE ELEVATIONS AND GROUND ELEVATION OVER PROPOSED CONDUITS AT 50' INTERVALS.
7. UPON COMPLETION OF CONSTRUCTION, THE CONTRACTOR SHALL SUBMIT TO THE ENGINEER OF RECORD ONE COMPLETE SET OF "AS-BUILT" CONSTRUCTION DRAWINGS. THESE DRAWINGS SHALL BE MARKED TO SHOW "RECORD DRAWINGS" OR "AS-BUILT" CONSTRUCTION CHANGES AND DIMENSIONED LOCATIONS AND ELEVATIONS OF ALL IMPROVEMENTS AND SHALL BE SIGNED AND SEALED BY A REGISTERED LAND SURVEYOR OR ENGINEER. FINAL AS-BUILT INFORMATION SHALL BE SUBMITTED ON AN AUTOCAD FORMAT AS DIRECTED BY THE ENGINEER.

VII. UTILITY PIPING (DUCT BANK)

A. CONTRACTOR MAY UTILIZE ONE OF THE FOLLOWING MATERIALS (AS DIRECTED AND APPROVED BY THE OWNER/MUNICIPAL AUTHORITY) ON A SIZE FOR SIZE BASIS:

1. HIGH DENSITY POLYETHYLENE PIPE (HDPE) & POLYVINYL-CHLORIDE PIPE (PVC) AS INDICATED IN PLANS.

B. MIN. COVER AND CLEARANCE:

1. UNLESS OTHERWISE INDICATED IN PLANS, 30" MIN. COVER OVER PROPOSED CONDUIT (DUCT BANKS) IS REQUIRED.
2. UNLESS OTHERWISE INDICATED IN PLANS, MIN. HORIZONTAL CLEARANCE BETWEEN PROPOSED CONDUIT (DUCT BANKS) AND OTHER PARALLELING UTILITIES IS 12" MINIMUM.
3. UNLESS OTHERWISE INDICATED IN PLANS, MIN. VERTICAL CLEARANCE BETWEEN PROPOSED CONDUIT (DUCT BANKS) TO CROSSING OTHER UTILITIES IS 12" MINIMUM.

C. BEDDING AND INITIAL BACKFILL OVER UTILITY PIPE SHALL BE SAND WITH NO ROCK LARGER THAN 1" DIAMETER.

D. BACKFILL MATERIAL UNDER PAVED AREAS SHALL BE COMPACTED TO 98% OF THE MAXIMUM DENSITY AS DETERMINED BY AASHTO T-180.

E. BACKFILL MATERIAL UNDER AREAS NOT TO BE PAVED SHALL BE COMPACTED TO 95% OF THE MAXIMUM DENSITY AS DETERMINED BY AASHTO T-180.

F. STORM WATER POLLUTION PROTECTION PLAN

CONTRACTOR SHALL INSTALL AND MAINTAIN TEMPORARY SILT SCREENERS IN CATCH BASINS AND AT LOCATIONS AS DIRECTED BY THE ENGINEER UNTIL FINAL ACCEPTANCE OCCURS.

VIII. PAVING

A. GENERAL

1. ALL UNDERGROUND UTILITIES SHALL BE COMPLETED PRIOR TO THE CONSTRUCTION OF THE LIMEROCK BASE AND PRIOR TO THE PLACEMENT OF THE PAVEMENT.
2. ALL STREET CORNER PAVEMENT RADII SHALL BE 25 FEET UNLESS OTHERWISE NOTED ON THE PLANS.

B. MATERIALS

1. LIMEROCK BASE MATERIAL SHALL HAVE A MINIMUM OF 70% CARBONATES (CALCIUM AND MAGNESIUM) WITH A MINIMUM LBR OF 100.
2. SUBGRADE MATERIAL SHALL HAVE A MINIMUM LBR OF 40 AND INSTALLED AT 98% AASHTO T-180 SPECS.
3. PRIME COAT AND TACK COAT SHALL MEET FLORIDA DEPARTMENT OF TRANSPORTATION (FDOT) STANDARDS.
4. SURFACE COURSE AS SHOWN ON PLANS.

C. INSTALLATION

1. LIMEROCK BASE MATERIAL SHALL BE 8" THICK OR AS SHOWN AND SHALL BE COMPACTED TO 98% OF THE MAXIMUM DENSITY AS DETERMINED BY AASHTO T-180.
2. LIMEROCK BASE MATERIAL SHALL BE PLACED IN TWO OR MORE EQUAL LIFTS.
3. ASPHALTIC CONCRETE AS SHOWN ON PLANS.
4. PRIME COAT SHALL BE PLACED ON ALL LIMEROCK BASES IN ACCORDANCE WITH (FDOT) STANDARDS.
5. TACK COAT SHALL BE PLACED, AS REQUIRED, ON ALL ASPHALT OVERLAY, IN ACCORDANCE WITH (FDOT) STANDARDS.

D. TESTING

ALL SUBGRADE, LIMEROCK AND ASPHALT TESTS REQUIRED SHALL BE TAKEN AT THE DIRECTION OF THE ENGINEER AND/OR THE OWNER/MUNICIPAL AUTHORITY.

E. PAVERS

ALL PAVER MATERIAL, INSTALLATION AND MAINTENANCE SPECIFICATIONS SHALL MEET THE REQUIREMENTS OF THE OWNER/MUNICIPAL AUTHORITY.

IX. SIGNING AND MARKING

A. PAVEMENT MARKINGS SHALL BE THERMOPLASTIC OR PAINT AS REQUIRED BY THE OWNER/MUNICIPAL AUTHORITY.

B. ALL SIGNS SHALL BE MANUFACTURED AND INSTALLED IN ACCORDANCE WITH THE MANUAL ON UNIFORM TRAFFIC CONTROL DEVICES (MUTCD).

C. REFLECTIVE PAVEMENT MARKERS SHALL BE CLASS B MARKERS MANUFACTURED IN ACCORDANCE WITH FDOT STANDARD SPECIFICATION FOR AND INSTALLED IN ACCORDANCE WITH THE MANUFACTURER'S RECOMMENDED PROCEDURES.

X. STORM WATER POLLUTION PREVENTION PLAN (SWPPP) REQUIREMENTS

A. CONTRACTOR IS RESPONSIBLE FOR PREPARING SWPPP, SUBMITTING SWPPP TO FLORIDA DEPARTMENT OF ENVIRONMENTAL PROTECTION, IMPLEMENTING AND MAINTAINING SWPPP DURING CONSTRUCTION ACTIVITIES AND ABIDING BY SWPPP REQUIREMENTS UNTIL FINAL CERTIFICATION OF SITE CONSTRUCTION IS OBTAINED.

XI. DEWATERING PERMIT

A. CONTRACTOR IS RESPONSIBLE FOR OBTAINING DEWATERING PERMIT FOR ANY PROPOSED DEWATERING ACTIVITIES.

XII. UNSUITABLE MATERIAL REMOVAL AND DISPOSAL

A. CONTRACTOR IS RESPONSIBLE FOR DETERMINATION/INVESTIGATION OF SUBSURFACE CONDITIONS. ALL UNSUITABLE MATERIAL SURFACE AND SUBSURFACE WITHIN AREAS OF CONSTRUCTION IS TO BE REMOVED AND DISPOSED OF IN ACCORDANCE WITH ALL APPLICABLE REGULATIONS. UNSUITABLE MATERIAL INCLUDES BUT IS NOT LIMITED TO DEBRIS, ORGANICS/MUCK, AND PLASTIC MATERIAL. ALL UNSUITABLE MATERIAL REMOVED SHALL BE REPLACED WITH SUITABLE MATERIAL.

XIII. GEOTECHNICAL REQUIREMENTS

A. CONTRACTOR IS RESPONSIBLE FOR GEOTECHNICAL INVESTIGATIONS PRIOR TO CONSTRUCTION COMMENCEMENT.

BID SET

PROJECT # 11715 LAS OLAS ISLES UNDERGROUNDING O/H TO U/G CONVERSION GENERAL NOTES	REVISIONS (NO. / DATE / BY / CHK'D / DESCRIPTION)	CITY OF FORT LAUDERDALE PUBLIC WORKS DEPARTMENT ENGINEERING & ARCHITECTURE 100 North Andrews Avenue, Fort Lauderdale, Florida 33301	DRAWN BY: CMD · DATE: 06/13/20 DESIGNED BY: DG · SCALE: AS NOTED CHECKED BY: RV FIELD BOOK:	

SHEET NO. 02 · TOTAL: 30 · CAD FILE: 11715-BID-NOTES · DRAWING FILE NO. 4-136-04

CONSTRUCTION PHASING PLAN

PHASE 1	CONDUIT PLACEMENT (UNDERGROUNDING)	INSTALL NEW CONDUITS IN THE EXISTING STREET R/W's AND BURIED SERVICE CONDUITS TO THE PROPOSED: A. FPL AT GRADE TRANSFORMERS B. AT&T HANDHOLES C. COMCAST PEDESTALS
PHASE 2	PULL CABLES/WIRES	FPL, AT&T AND COMCAST TO PULL CABLE/WIRE TO ALL SERVICE POINTS TERMINATING AT: A. FPL AT GRADE TRANSFORMERS B. AT&T HANDHOLES C. COMCAST PEDESTALS
PHASE 3	RESIDENTIAL SERVICE CONNECTIONS	RUN SERVICES TO ALL RESIDENCES AND ENERGIZE TO COMPLETE THE TRANSFER TO THE NEW SYSTEM(S).
PHASE 4	RESTORATION WITHIN R/W ONLY	RESTORATION OF PAVEMENT WITHIN THE STREET R/W.

NOTE:
THE NORTHERN TERMINATION OF THE PROPOSED MAIN CONDUIT(S) PLACEMENT FOR EACH OF THE STREETS IN LAS OLAS ISLES SHOULD CONNECT TO THE INDIVIDUAL UTILITIES (FPL, AT&T AND COMCAST) CONDUITS WITHIN THE LAS OLAS BLVD. R/W. CONTRACTOR COORDINATION WITH EACH UTILITY WILL BE REQUIRED TO IMPLEMENT THESE CONNECTIONS.

CITY OF FORT LAUDERDALE
PUBLIC WORKS DEPARTMENT
ENGINEERING & ARCHITECTURE

PROJECT # 11715
LAS OLAS ISLES UNDERGROUNDING
O/H TO U/G CONVERSION
CONSTRUCTION PHASING PLAN

BID SET

03

C:\USERS\CRAIGB\ONEDRIVE\DESKTOP\SCRATCH\BID\11715-BID-KEYMAP.DWG

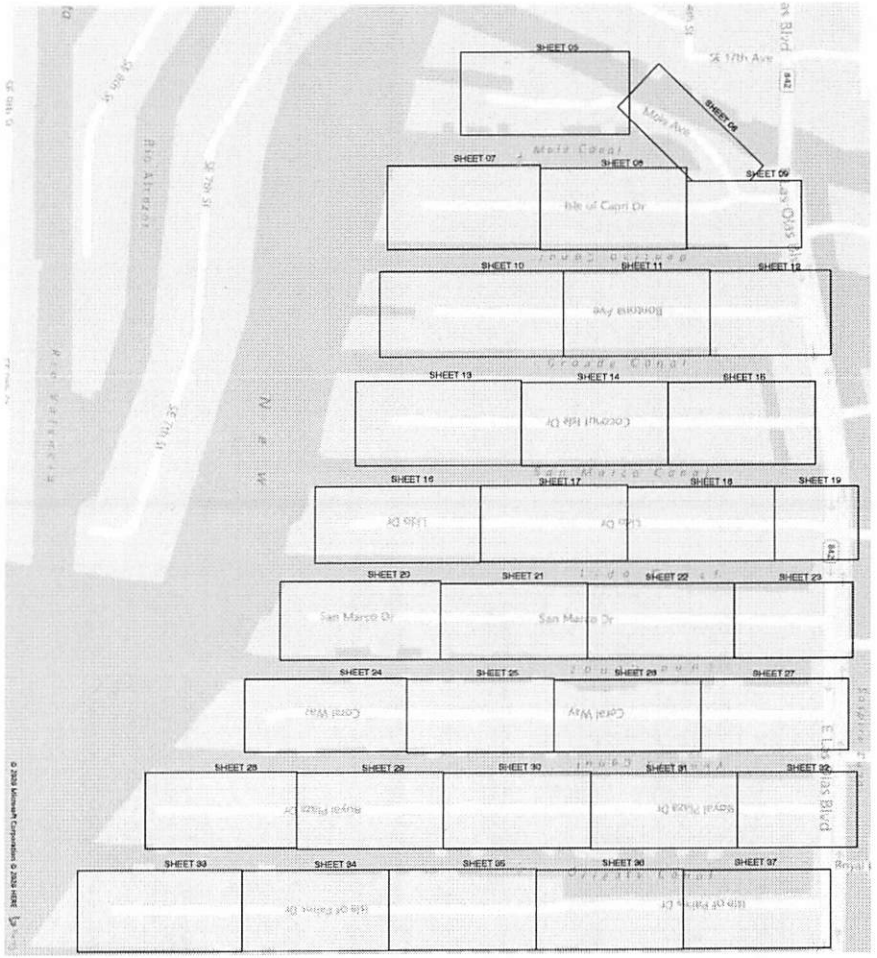

BID SET

SHEET NO. 04	PROJECT # 11715 LAS OLAS ISLES UNDERGROUNDING O/H TO U/G CONVERSION KEY MAP	REVISIONS NO. / DATE / BY / CHK'D / DESCRIPTION	CITY OF FORT LAUDERDALE PUBLIC WORKS DEPARTMENT ENGINEERING & ARCHITECTURE 100 North Andrews Avenue, Fort Lauderdale, Florida 33301

DRAWN BY: CMB	DATE: 09/15/20
DESIGNED BY: DG	SCALE: AS NOTED
CHECKED BY: RV	
FIELD BOOK:	

CAD FILE: 11715-BID-KEYMAP
DRAWING FILE NO. 4-136-94

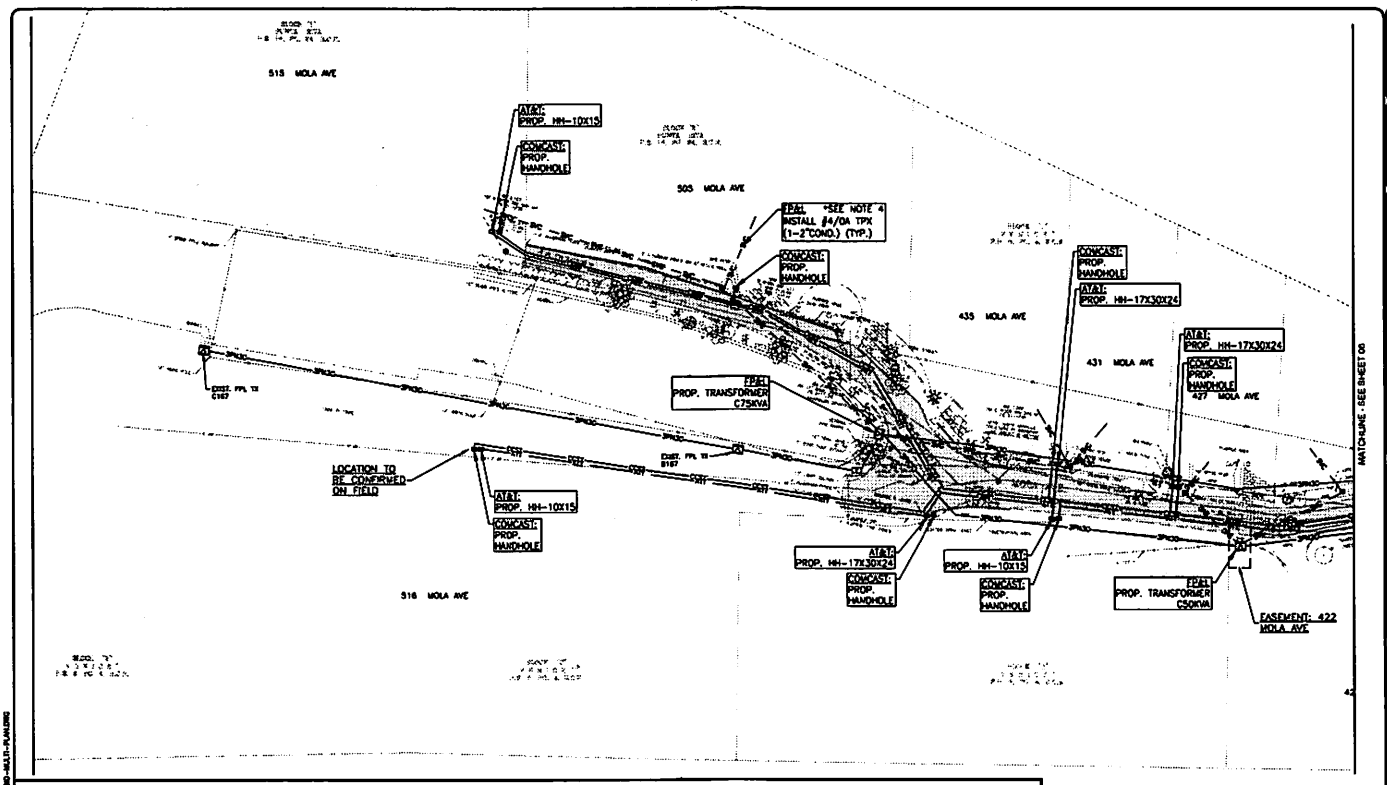

NOTES:

1. THE CONDUIT ALIGNMENT SHOWN IS PRELIMINARY. FINAL ALIGNMENT TO BE BASED ON RESULTS OF SOFT DIG POT HOLES CONTRACTED BY THE CITY OF FORT LAUDERDALE.
2. UTILITIES (FPL, AT&T AND COMCAST) TRANSFORMERS, HANDHOLES AND PEDESTALS HAVE BEEN LOCATED IN ACCORDANCE WITH PRELIMINARY SCHEMATIC DRAWINGS PROVIDED TO THE ENGINEER DURING DESIGN DEVELOPMENT PHASE. FINAL LOCATIONS TO BE REVIEWED, APPROVED/ACCEPTED BY EACH UTILITY COMPANY FOR FINAL CONSTRUCTION DOCUMENT PHASE.
3. PLANS INDICATE THE UNDERGROUNDING CONDUITS AND NECESSARY WORK WITHIN THE STREET R/W ONLY. CONTRACTOR TO REFER TO EACH UTILITIES PLANS FOR ROUTING FROM TRANSFORMERS, HANDHOLES AND PEDESTALS TO THE INDIVIDUAL RESIDENCE SERVICE POINTS.

GRAPHIC SCALE

(IN FEET)
1 inch = 20 ft.

LEGEND PROPOSED:

- FNC — FLORIDA POWER & LIGHT FEEDER NETWORK CABLE AND CONDUIT
- FPN/FC — FLORIDA POWER & LIGHT PRIMARY CABLE AND CONDUIT
- SVC — FLORIDA POWER & LIGHT SERVICE CABLE AND CONDUIT
- ATT — AT&T CONDUIT
- CCST — COMCAST COMMUNICATIONS CONDUIT
- AT&T PROPOSED HANDHOLE
- COMCAST PROPOSED HANDHOLE
- CITY STREET LIGHT SPLICE BOX
- CITY STREET LIGHT FOUNDATION
- CITY HANDHOLE
- PROPOSED BORE PIT
- FP&L SPLICE BOX
- FP&L FEEDER SPLICE BOX
- FP&L SWITCH CABINET
- FP&L TRANSFORMERS (PROPOSED)
- FP&L TRANSFORMERS (EXISTING)
- EXISTING PAVEMENT
- FP&L FUSE CABINET
- FP&L CAPACITOR BANK
- FP&L SPLICE BOX
- FP&L HANDHOLE

BID SET

CITY OF FORT LAUDERDALE
PUBLIC WORKS DEPARTMENT
ENGINEERING & ARCHITECTURE
100 North Andrews Avenue Fort Lauderdale, Florida 33301

REVISIONS

PROJECT # 11715
LAS OLAS ISLES UNDERGROUNDING
O/H TO U/G CONVERSION
MOLA AVE
PLAN

SHEET NO. 05
TOTAL: 50
CAD FILE: 11715-BID-MULTI-PLAN
DRAWING FILE NO. 4-135-04

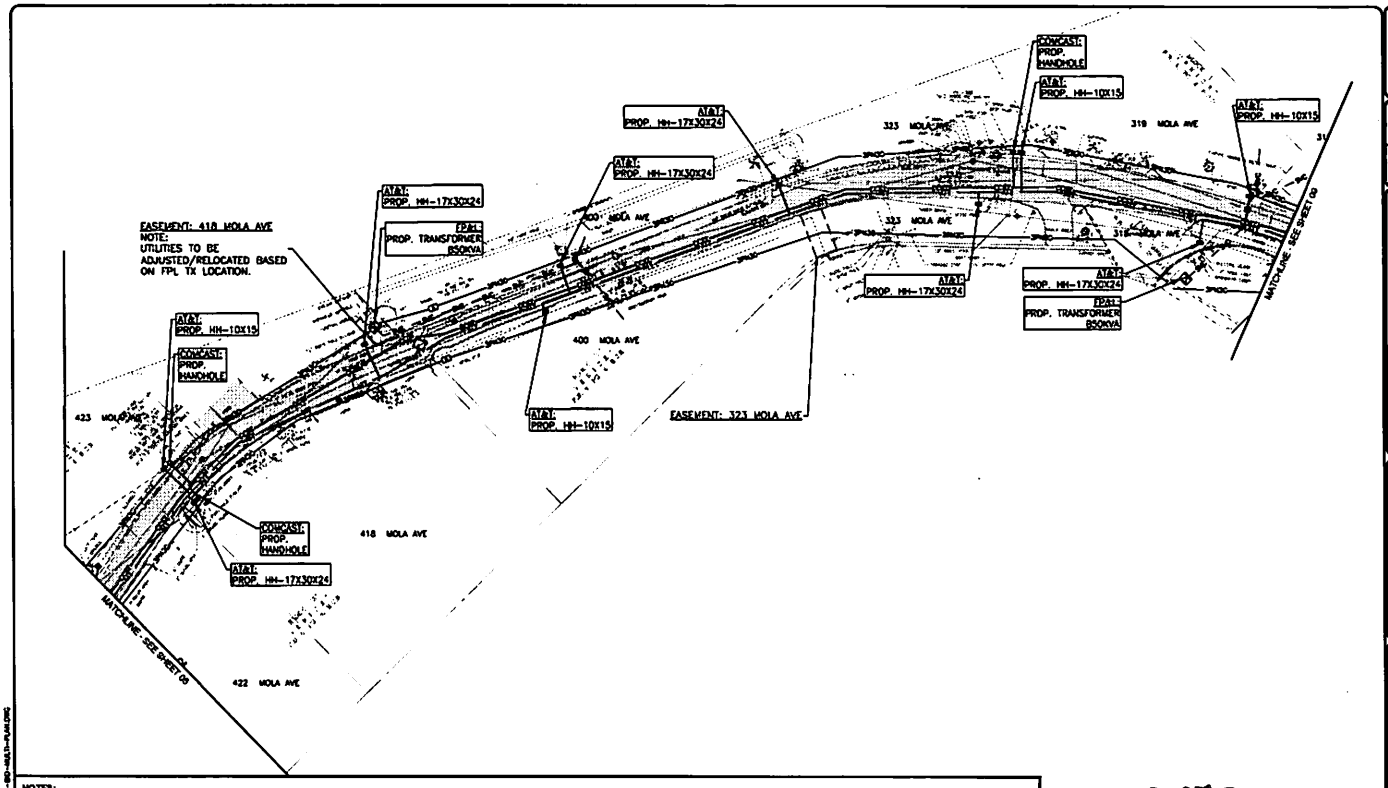

NOTES:

1. THE CONDUIT ALIGNMENT SHOWN IS PRELIMINARY. FINAL ALIGNMENT TO BE BASED ON RESULTS OF SOFT DIG POT HOLES CONTRACTED BY THE CITY OF FORT LAUDERDALE.
2. UTILITIES (FPL, AT&T AND COMCAST) TRANSFORMERS, HANDHOLES AND PEDESTALS HAVE BEEN LOCATED IN ACCORDANCE WITH PRELIMINARY SCHEMATIC DRAWINGS PROVIDED TO THE ENGINEER DURING DESIGN DEVELOPMENT PHASE. FINAL LOCATIONS TO BE REVIEWED, APPROVED/ACCEPTED BY EACH UTILITY COMPANY FOR FINAL CONSTRUCTION DOCUMENT PHASE.
3. PLANS INDICATE THE UNDERGROUNDING CONDUITS AND NECESSARY WORK WITHIN THE STREET R/W ONLY. CONTRACTOR TO REFER TO EACH UTILITIES PLANS FOR ROUTING FROM TRANSFORMERS, HANDHOLES AND PEDESTALS TO THE INDIVIDUAL RESIDENCE SERVICE POINTS.

LEGEND PROPOSED:

- FNC — FLORIDA POWER & LIGHT FEEDER NETWORK CABLE AND CONDUIT
- FPN/C — FLORIDA POWER & LIGHT PRIMARY CABLE AND CONDUIT
- SVC — FLORIDA POWER & LIGHT SERVICE CABLE AND CONDUIT
- ATT — AT&T CONDUIT
- CCST — COMCAST COMMUNICATIONS CONDUIT

- AT&T PROPOSED HANDHOLE
- COMCAST PROPOSED HANDHOLE
- CITY STREET LIGHT SPLICE BOX
- CITY STREET LIGHT FOUNDATION
- CITY HANDHOLE
- PROPOSED BORE PIT
- FP&L SPLICE BOX
- FP&L FEEDER SPLICE BOX
- FP&L SWITCH CABINET
- FP&L TRANSFORMERS (PROPOSED)
- FP&L TRANSFORMERS (EXISTING)
- EXISTING PAVEMENT
- FP&L FUSE CABINET
- FP&L CAPACITOR BANK
- FP&L SPLICE BOX
- FP&L HANDHOLE

BID SET

CITY OF FORT LAUDERDALE
PUBLIC WORKS DEPARTMENT
ENGINEERING & ARCHITECTURE

PROJECT # 11715
LAS OLAS ISLES UNDERGROUNDING
O/H TO U/G CONVERSION
MOLA AVE
PLAN

06

C:\USERS\JONES\ONEDRIVE\DESKTOP\JOBS\CAD\11715-BID-MLS-PLAN.DWG

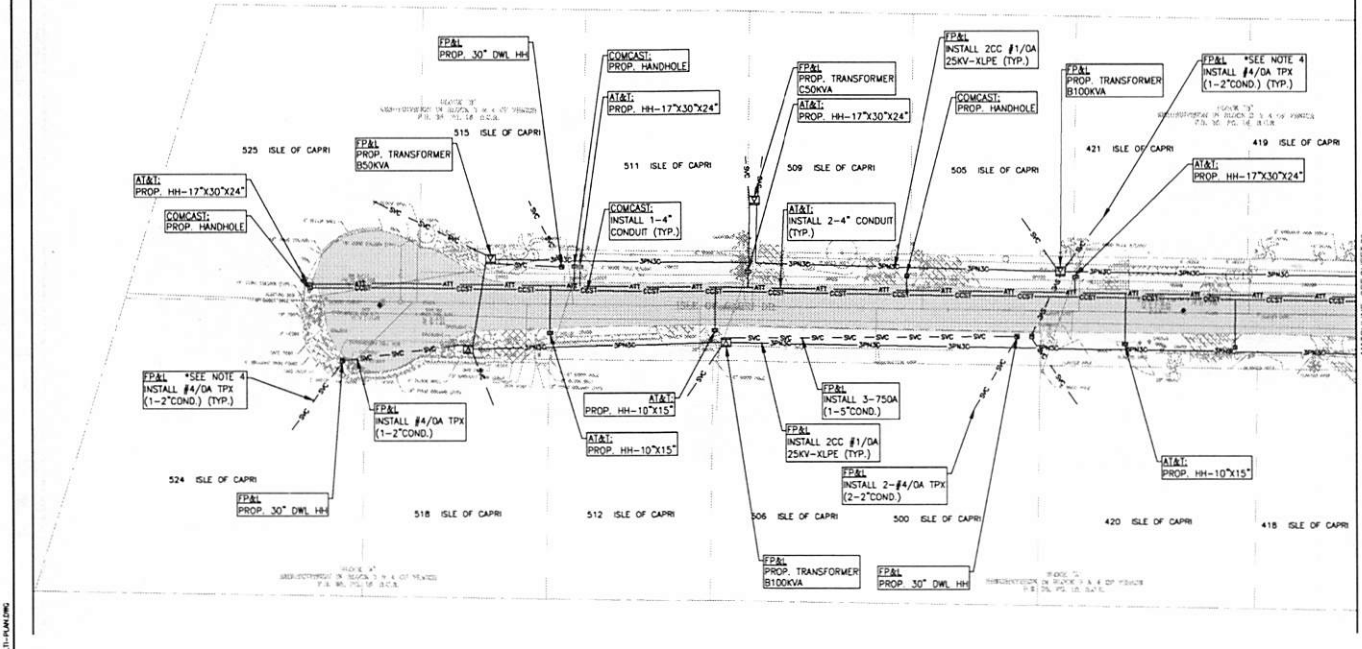

NOTES:

1. THE CONDUIT ALIGNMENT SHOWN IS PRELIMINARY. FINAL ALIGNMENT TO BE BASED ON RESULTS OF SOFT DIG POT HOLES CONTRACTED BY THE CITY OF FORT LAUDERDALE.
2. UTILITIES (FPL, AT&T AND COMCAST) TRANSFORMERS, HANDHOLES AND PEDESTALS HAVE BEEN LOCATED IN ACCORDANCE WITH SCHEMATIC DRAWINGS PROVIDED TO THE ENGINEER DURING DESIGN DEVELOPMENT PHASE. FINAL LOCATIONS TO BE REVIEWED, APPROVED/ACCEPTED BY EACH UTILITY COMPANY FOR FINAL CONSTRUCTION DOCUMENT PHASE.
3. PLANS INDICATE THE UNDERGROUNDING CONDUITS AND NECESSARY WORK WITHIN THE STREET R/W ONLY. CONTRACTOR TO REFER TO EACH UTILITIES PLANS FOR ROUTING FROM TRANSFORMERS, HANDHOLES AND PEDESTALS TO THE INDIVIDUAL RESIDENCE SERVICE POINTS.
4. TYPICAL FOR THE MAJORITY OF ALL FPL SERVICES UNLESS OTHERWISE CALLED OUT.

GRAPHIC SCALE
20 0 10 20 40 80
(IN FEET)
1 inch = 20 ft.

LEGEND PROPOSED:

FNC	FLORIDA POWER & LIGHT FEEDER NETWORK CABLE AND CONDUIT
#PN#C	FLORIDA POWER & LIGHT PRIMARY CABLE AND CONDUIT
SVC	FLORIDA POWER & LIGHT SERVICE CABLE AND CONDUIT
ATT	AT&T CONDUIT
CCST	COMCAST COMMUNICATIONS CONDUIT

AT&T PROPOSED HANDHOLE
COMCAST PROPOSED HANDHOLE
CITY STREET LIGHT SPLICE BOX
CITY STREET LIGHT FOUNDATION
CITY HANDHOLE
PROPOSED BORE PIT

FP&L SPLICE BOX
FP&L FEEDER SPLICE BOX
FP&L SWITCH CABINET
FP&L TRANSFORMERS (PROPOSED)
FP&L TRANSFORMERS (EXISTING)

EXISTING PAVEMENT
FP&L FUSE CABINET
FP&L CAPACITOR BANK
FP&L SPLICE BOX
FP&L HANDHOLE

BID SET

CITY OF FORT LAUDERDALE
PUBLIC WORKS DEPARTMENT
ENGINEERING & ARCHITECTURE
100 North Andrews Avenue, Fort Lauderdale, Florida 33301

DRAWN BY: CMB DATE: 08/15/20
DESIGNED BY: DC SCALE: AS NOTED
CHECKED BY: RV
FIELD BOOK:

REVISIONS

NO.	DATE	BY	CHK'D	DESCRIPTION

PROJECT # 11715
LAS OLAS ISLES UNDERGROUNDING
O/H TO U/G CONVERSION
ISLE OF CAPRI
PLAN

SHEET NO. 07
TOTAL: 50
CAD FILE: 11715-BID-MULTI-PLAN
DRAWING FILE NO. 4-136-94

C:\USERS\CHARGE\ONEDRIVE\DESKTOP\SCHATCH\BID\11715-BID-MULTI-PLAN.DWG

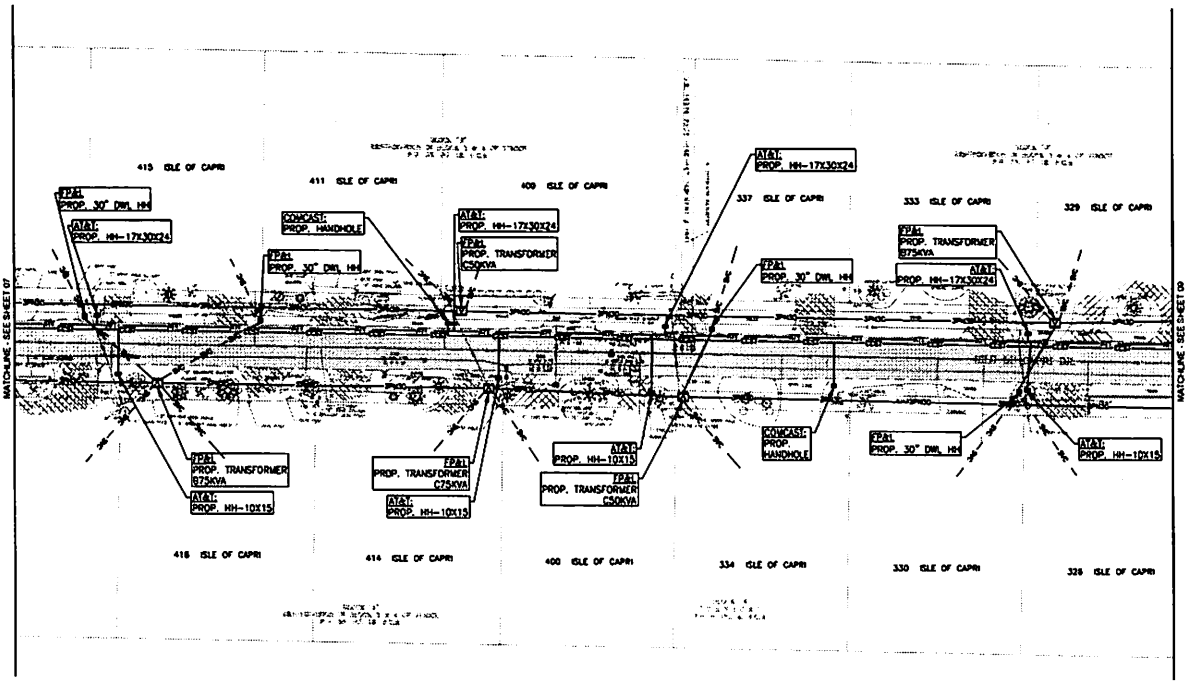

NOTES:

1. THE CONDUIT ALIGNMENT SHOWN IS PRELIMINARY. FINAL ALIGNMENT TO BE BASED ON RESULTS OF SOFT DIG POT HOLES CONTRACTED BY THE CITY OF FORT LAUDERDALE.
2. UTILITIES (FPL, AT&T AND COMCAST) TRANSFORMERS, HANDHOLES AND PEDESTALS HAVE BEEN LOCATED IN ACCORDANCE WITH PRELIMINARY SCHEMATIC DRAWINGS PROVIDED TO THE ENGINEER DURING DESIGN DEVELOPMENT PHASE. FINAL LOCATIONS TO BE REVIEWED, APPROVED/ACCEPTED BY EACH UTILITY COMPANY FOR FINAL CONSTRUCTION DOCUMENT PHASE.
3. PLANS INDICATE THE UNDERGROUNDING CONDUITS AND NECESSARY WORK WITHIN THE STREET R/W ONLY. CONTRACTOR TO REFER TO EACH UTILITIES PLANS FOR ROUTING FROM TRANSFORMERS, HANDHOLES AND PEDESTALS TO THE INDIVIDUAL RESIDENCE SERVICE POINTS.

LEGEND PROPOSED:

- FNC — FLORIDA POWER & LIGHT FEEDER NETWORK CABLE AND CONDUIT
- PN/C — FLORIDA POWER & LIGHT PRIMARY CABLE AND CONDUIT
- SVC — FLORIDA POWER & LIGHT SERVICE CABLE AND CONDUIT
- ATT — AT&T CONDUIT
- CCST — COMCAST COMMUNICATIONS CONDUIT
- AT&T PROPOSED HANDHOLE
- COMCAST PROPOSED HANDHOLE
- CITY STREET LIGHT SPLICE BOX
- CITY STREET LIGHT FOUNDATION
- CITY HANDHOLE
- PROPOSED BORE PIT
- FP&L SPLICE BOX
- FP&L FEEDER SPLICE BOX
- FP&L SWITCH CABINET
- FP&L TRANSFORMERS (PROPOSED)
- FP&L TRANSFORMERS (EXISTING)
- EXISTING PAVEMENT
- FP&L FUSE CABINET
- FP&L CAPACITOR BANK
- FP&L SPLICE BOX
- FP&L HANDHOLE

GRAPHIC SCALE

(IN FEET)
1 inch = 20 ft.

BID SET

CITY OF FORT LAUDERDALE
PUBLIC WORKS DEPARTMENT
ENGINEERING & ARCHITECTURE
100 North Andrews Avenue, Fort Lauderdale, Florida 33301

REVISIONS

PROJECT # 11715
LAS OLAS ISLES UNDERGROUNDING
O/H TO U/G CONVERSION
ISLE OF CAPRI
PLAN

SHEET NO. 08
SHEET 50
CAD FILE: 11715-BID-MULTI-PLAN
DRAWING FILE NO. 4-136-94

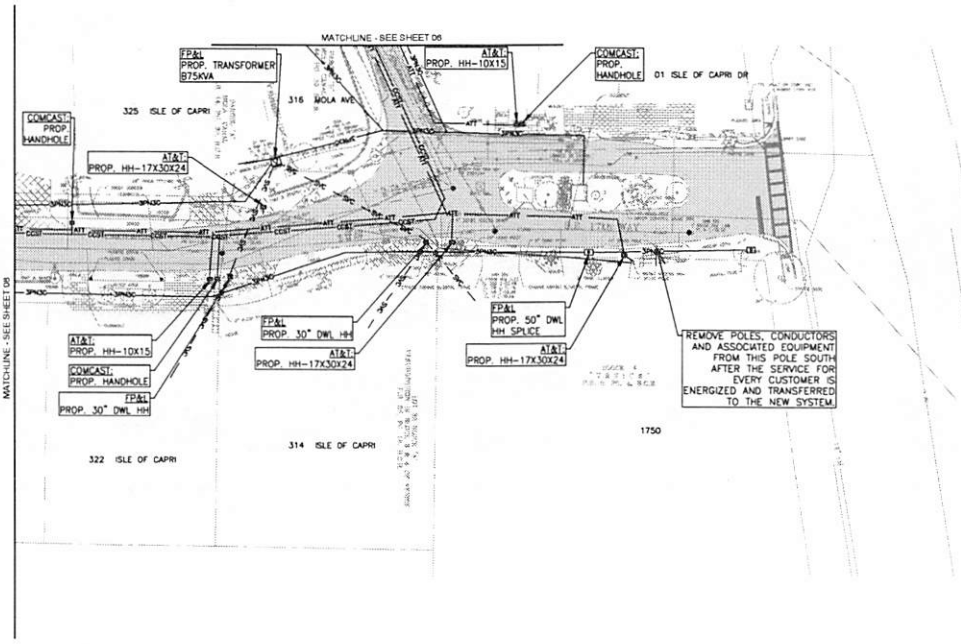

NOTES:

1. THE CONDUIT ALIGNMENT SHOWN IS PRELIMINARY. FINAL ALIGNMENT TO BE BASED ON RESULTS OF SOFT DIG POT HOLES CONTRACTED BY THE CITY OF FORT LAUDERDALE.
2. UTILITIES (FPL, AT&T AND COMCAST) TRANSFORMERS, HANDHOLES AND PEDESTALS HAVE BEEN LOCATED IN ACCORDANCE WITH PRELIMINARY SCHEMATIC DRAWINGS PROVIDED TO THE ENGINEER DURING DESIGN DEVELOPMENT PHASE. FINAL LOCATIONS TO BE REVIEWED, APPROVED/ACCEPTED BY EACH UTILITY COMPANY FOR FINAL CONSTRUCTION DOCUMENT PHASE.
3. PLANS INDICATE THE UNDERGROUNDING CONDUITS AND NECESSARY WORK WITHIN THE STREET R/W ONLY. CONTRACTOR TO REFER TO EACH UTILITIES PLANS FOR ROUTING FROM TRANSFORMERS, HANDHOLES AND PEDESTALS TO THE INDIVIDUAL RESIDENCE SERVICE POINTS.

GRAPHIC SCALE
20 0 10 20 40 80
(IN FEET)
1 inch = 20 ft.

LEGEND PROPOSED:

- FNC — FLORIDA POWER & LIGHT FEEDER NETWORK CABLE AND CONDUIT
- PNPC — FLORIDA POWER & LIGHT PRIMARY CABLE AND CONDUIT
- SVC — FLORIDA POWER & LIGHT SERVICE CABLE AND CONDUIT
- ATT — AT&T CONDUIT
- CCST — COMCAST COMMUNICATIONS CONDUIT

- AT&T PROPOSED HANDHOLE
- COMCAST PROPOSED HANDHOLE
- CITY STREET LIGHT SPLICE BOX
- CITY STREET LIGHT FOUNDATION
- CITY HANDHOLE
- PROPOSED BORE PIT

- FP&L SPLICE BOX
- FP&L FEEDER SPLICE BOX
- FP&L SWITCH CABINET
- FP&L TRANSFORMERS (PROPOSED)
- FP&L TRANSFORMERS (EXISTING)

- EXISTING PAVEMENT
- FP&L FUSE CABINET
- FP&L CAPACITOR BANK
- FP&L SPLICE BOX
- FP&L HANDHOLE

BID SET

CITY OF FORT LAUDERDALE
PUBLIC WORKS DEPARTMENT
ENGINEERING & ARCHITECTURE
100 North Andrews Avenue, Fort Lauderdale, Florida 33311

REVISIONS

NO	DATE	BY	CHK'D	DESCRIPTION

PROJECT # 11715
LAS OLAS ISLES UNDERGROUNDING
O/H TO U/G CONVERSION
ISLE OF CAPRI - MOLA AVE
PLAN

SHEET NO. 09
TOTAL: 50
CAD FILE: 11715-BID-MULTI-PLAN
DRAWING FILE NO. 4-138-04

C:\USERS\JONAS\ONEDRIVE\DESKTOP\LOCATION\ENG\11715-BID-MULTI-PLAN.DWG

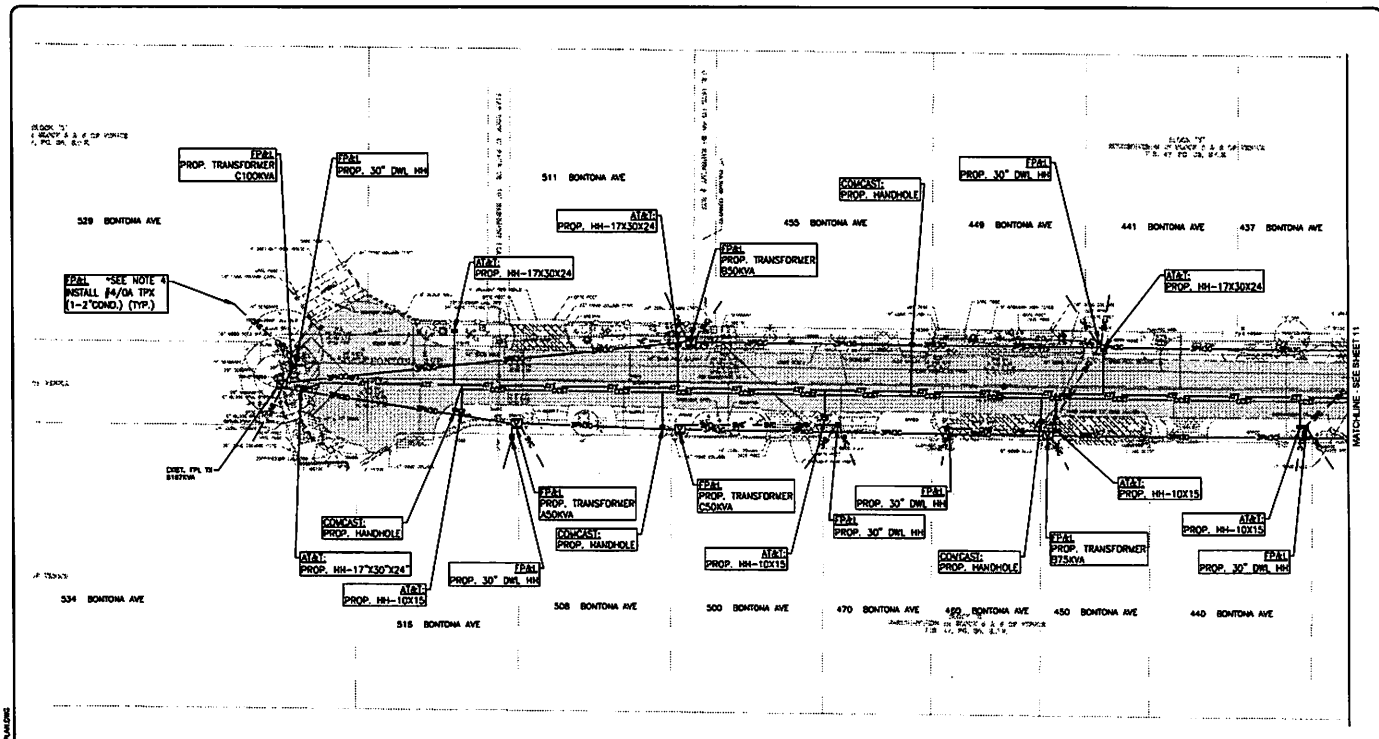

NOTES:

1. THE CONDUIT ALIGNMENT SHOWN IS PRELIMINARY. FINAL ALIGNMENT TO BE BASED ON RESULTS OF SOFT DIG POT HOLES CONTRACTED BY THE CITY OF FORT LAUDERDALE.
2. UTILITIES (FPL, AT&T AND COMCAST) TRANSFORMERS, HANDHOLES AND PEDESTALS HAVE BEEN LOCATED IN ACCORDANCE WITH PRELIMINARY SCHEMATIC DRAWINGS PROVIDED TO THE ENGINEER DURING DESIGN DEVELOPMENT PHASE. FINAL LOCATIONS TO BE REVIEWED, APPROVED/ACCEPTED BY EACH UTILITY COMPANY FOR FINAL CONSTRUCTION DOCUMENT PHASE.
3. PLANS INDICATE THE UNDERGROUNDING CONDUITS AND NECESSARY WORK WITHIN THE STREET R/W ONLY. CONTRACTOR TO REFER TO EACH UTILITIES PLANS FOR ROUTING FROM TRANSFORMERS, HANDHOLES AND PEDESTALS TO THE INDIVIDUAL RESIDENCE SERVICE POINTS.

GRAPHIC SCALE
20 0 10 20 40 60
(IN FEET)
1 inch = 20 ft.

LEGEND PROPOSED:

- FNC — FLORIDA POWER & LIGHT FEEDER NETWORK CABLE AND CONDUIT
- FPN/C — FLORIDA POWER & LIGHT PRIMARY CABLE AND CONDUIT
- SVC — FLORIDA POWER & LIGHT SERVICE CABLE AND CONDUIT
- ATT — AT&T CONDUIT
- CCST — COMCAST COMMUNICATIONS CONDUIT

- AT&T PROPOSED HANDHOLE
- COMCAST PROPOSED HANDHOLE
- CITY STREET LIGHT SPLICE BOX
- CITY STREET LIGHT FOUNDATION
- CITY HANDHOLE
- PROPOSED BORE PIT
- FP&L SPLICE BOX
- FP&L FEEDER SPLICE BOX
- FP&L SWITCH CABINET
- FP&L TRANSFORMERS (PROPOSED)
- FP&L TRANSFORMERS (EXISTING)
- EXISTING PAVEMENT
- FP&L FUSE CABINET
- FP&L CAPACITOR BANK
- FP&L SPLICE BOX
- FP&L HANDHOLE

BID SET

CITY OF FORT LAUDERDALE
PUBLIC WORKS DEPARTMENT
ENGINEERING & ARCHITECTURE
[illegible] North Andrews Avenue, Fort Lauderdale, Florida 33301

REVISIONS

NO.	DATE	BY	DESCRIPTION

PROJECT # 11715
LAS OLAS ISLES UNDERGROUNDING
O/H TO U/G CONVERSION
BONTONA AVE
PLAN

SHEET NO. 10
TOTAL 15

CAD FILE 11715-BID-MAIN-PLAN
DRAWING FILE NO. 6-126-04

C:\USERS\DMACEVICH\DESKTOP\WORKING\11715-BID-MAIN-PLAN.DWG

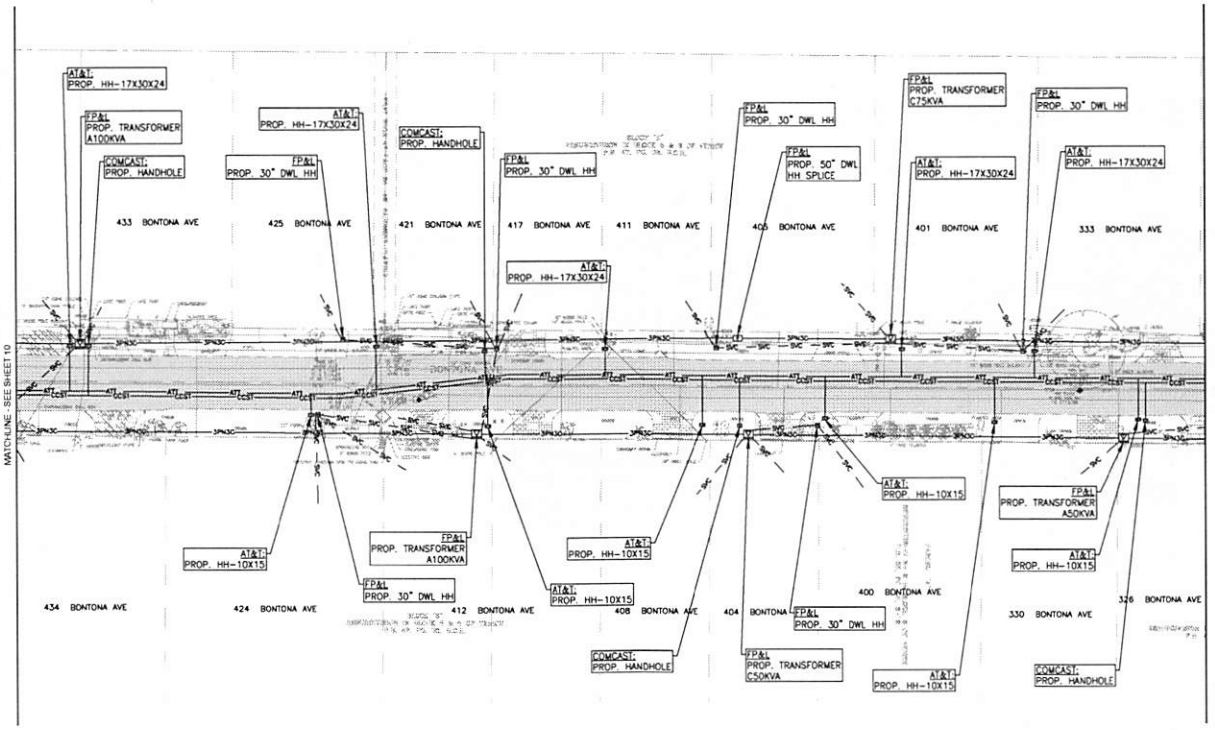

NOTES:

1. THE CONDUIT ALIGNMENT SHOWN IS PRELIMINARY. FINAL ALIGNMENT TO BE BASED ON RESULTS OF SOFT DIG POT HOLES CONTRACTED BY THE CITY OF FORT LAUDERDALE.
2. UTILITIES (FPL, AT&T AND COMCAST) TRANSFORMERS, HANDHOLES AND PEDESTALS HAVE BEEN LOCATED IN ACCORDANCE WITH PRELIMINARY SCHEMATIC DRAWINGS PROVIDED TO THE ENGINEER DURING DESIGN DEVELOPMENT PHASE. FINAL LOCATIONS TO BE REVIEWED, APPROVED/ACCEPTED BY EACH UTILITY COMPANY FOR FINAL CONSTRUCTION DOCUMENT PHASE.
3. PLANS INDICATE THE UNDERGROUNDING CONDUITS AND NECESSARY WORK WITHIN THE STREET R/W ONLY. CONTRACTOR TO REFER TO EACH UTILITIES PLANS FOR ROUTING FROM TRANSFORMERS, HANDHOLES AND PEDESTALS TO THE INDIVIDUAL RESIDENCE SERVICE POINTS.

GRAPHIC SCALE
20 0 10 20 40 80
(IN FEET)
1 inch = 20 ft.

LEGEND PROPOSED:

- FNC — FLORIDA POWER & LIGHT FEEDER NETWORK CABLE AND CONDUIT
- PN/C — FLORIDA POWER & LIGHT PRIMARY CABLE AND CONDUIT
- SVC — FLORIDA POWER & LIGHT SERVICE CABLE AND CONDUIT
- ATT — AT&T CONDUIT
- CCST — COMCAST COMMUNICATIONS CONDUIT
- AT&T PROPOSED HANDHOLE
- COMCAST PROPOSED HANDHOLE
- CITY STREET LIGHT SPLICE BOX
- CITY STREET LIGHT FOUNDATION
- CITY HANDHOLE
- PROPOSED BORE PIT
- FP&L SPLICE BOX
- FP&L FEEDER SPLICE BOX
- FP&L SWITCH CABINET
- FP&L TRANSFORMERS (PROPOSED)
- FP&L TRANSFORMERS (EXISTING)
- EXISTING PAVEMENT
- FP&L FUSE CABINET
- FP&L CAPACITOR BANK
- FP&L SPLICE BOX
- FP&L HANDHOLE

BID SET

CITY OF FORT LAUDERDALE
PUBLIC WORKS DEPARTMENT
ENGINEERING & ARCHITECTURE
100 North Andrews Avenue, Fort Lauderdale, Florida 33301

REVISIONS				
NO.	DATE	BY	CHK'D	DESCRIPTION

PROJECT # 11715
LAS OLAS ISLES UNDERGROUNDING
O/H TO U/G CONVERSION
BOTONA AVE
PLAN

SHEET NO. 11
TOTAL: 50
CAD FILE: 11715-BID-MULTI-PLAN
DRAWING FILE NO. 4-135-94

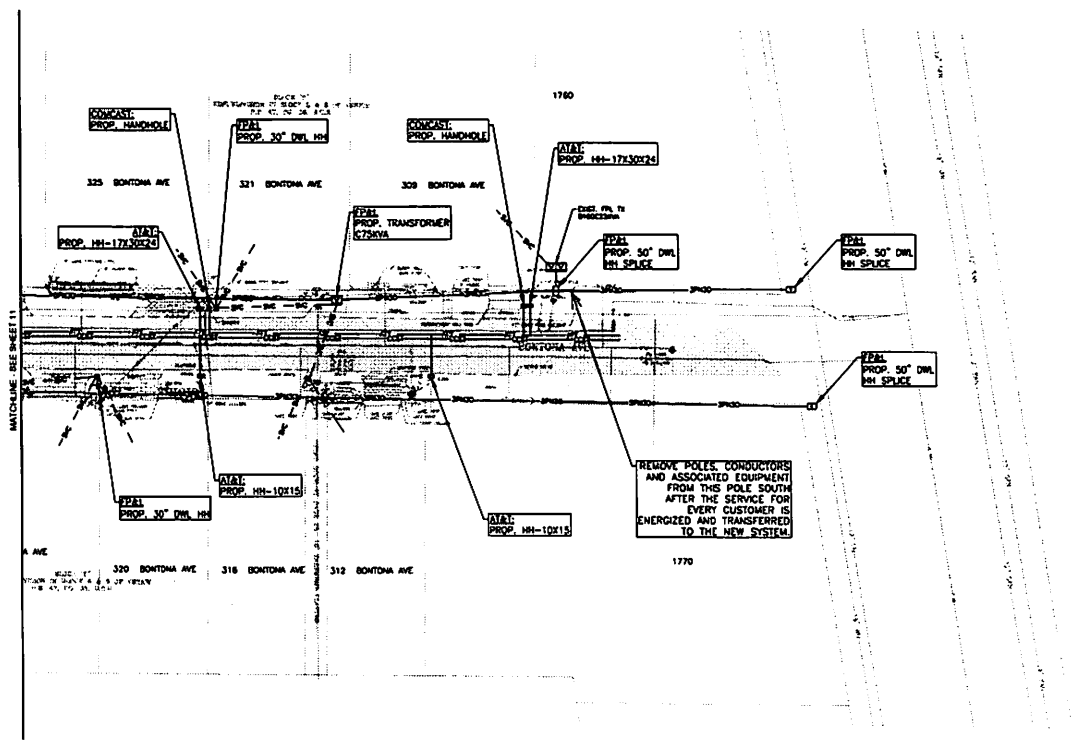

NOTES:

1. THE CONDUIT ALIGNMENT SHOWN IS PRELIMINARY. FINAL ALIGNMENT TO BE BASED ON RESULTS OF SOFT DIG POT HOLES CONTRACTED BY THE CITY OF FORT LAUDERDALE.
2. UTILITIES (FPL, AT&T AND COMCAST) TRANSFORMERS, HANDHOLES AND PEDESTALS HAVE BEEN LOCATED IN ACCORDANCE WITH PRELIMINARY SCHEMATIC DRAWINGS PROVIDED TO THE ENGINEER DURING DESIGN DEVELOPMENT PHASE. FINAL LOCATIONS TO BE REVIEWED, APPROVED/ACCEPTED BY EACH UTILITY COMPANY FOR FINAL CONSTRUCTION DOCUMENT PHASE.
3. PLANS INDICATE THE UNDERGROUNDING CONDUITS AND NECESSARY WORK WITHIN THE STREET R/W ONLY. CONTRACTOR TO REFER TO EACH UTILITIES PLANS FOR ROUTING FROM TRANSFORMERS, HANDHOLES AND PEDESTALS TO THE INDIVIDUAL RESIDENCE SERVICE POINTS.

LEGEND PROPOSED:

- FNC — FLORIDA POWER & LIGHT FEEDER NETWORK CABLE AND CONDUIT
- #PN/C — FLORIDA POWER & LIGHT PRIMARY CABLE AND CONDUIT
- SVC — FLORIDA POWER & LIGHT SERVICE CABLE AND CONDUIT
- ATT — AT&T CONDUIT
- CCST — COMCAST COMMUNICATIONS CONDUIT
- AT&T PROPOSED HANDHOLE
- COMCAST PROPOSED HANDHOLE
- CITY STREET LIGHT SPLICE BOX
- CITY STREET LIGHT FOUNDATION
- CITY HANDHOLE
- PROPOSED BORE PIT
- FP&L SPLICE BOX
- FP&L FEEDER SPLICE BOX
- FP&L SWITCH CABINET
- FP&L TRANSFORMERS (PROPOSED)
- FP&L TRANSFORMERS (EXISTING)
- EXISTING PAVEMENT
- FP&L FUSE CABINET
- FP&L CAPACITOR BANK
- FP&L SPLICE BOX
- FP&L HANDHOLE

GRAPHIC SCALE

(IN FEET)
1 inch = 20' ft.

BID SET

CITY OF FORT LAUDERDALE
PUBLIC WORKS DEPARTMENT
ENGINEERING & ARCHITECTURE
100 North Andrews Avenue Fort Lauderdale, Florida 33301

REVISIONS

PROJECT # 11715
LAS OLAS ISLES UNDERGROUNDING
O/H TO U/G CONVERSION
BOTONA AVE
PLAN

SHEET NO. 12
TOTAL 50
CAD FILE 11715-BID-MULTI-PLAN
DRAWING FILE NO. 4-136-04

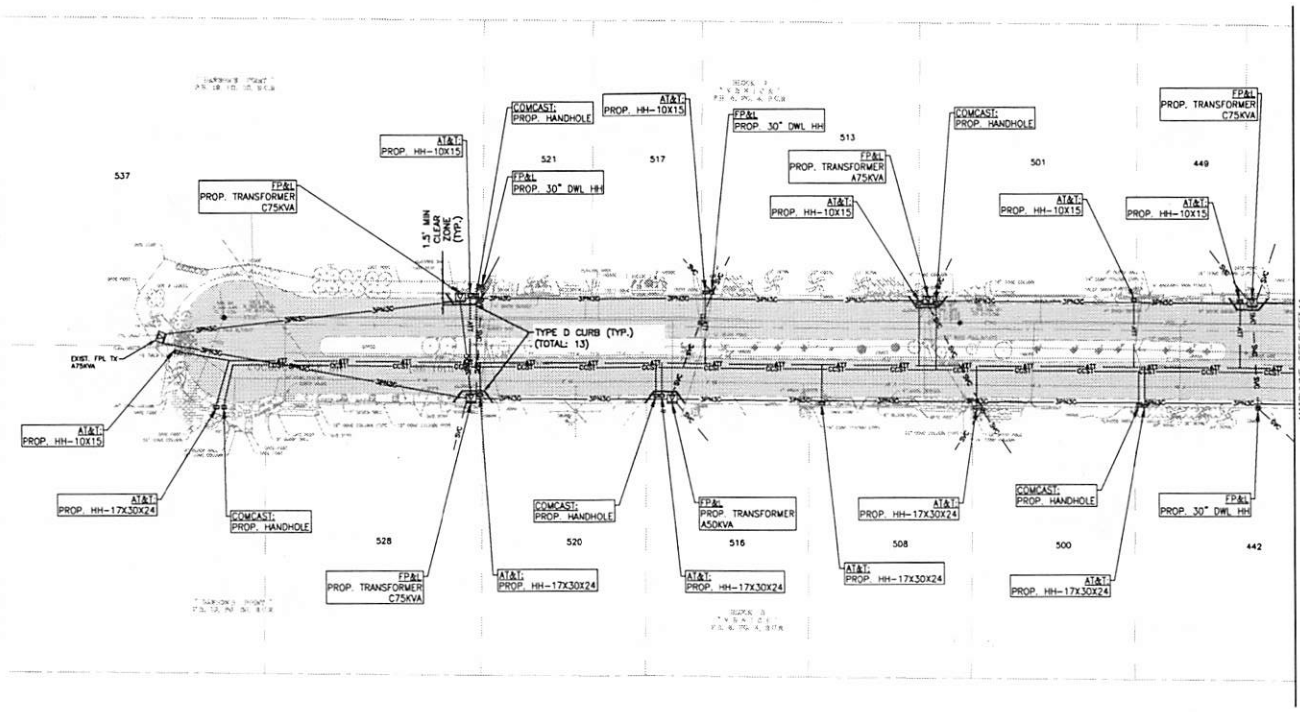

NOTES:

1. THE CONDUIT ALIGNMENT SHOWN IS PRELIMINARY. FINAL ALIGNMENT TO BE BASED ON RESULTS OF SOFT DIG POT HOLES CONTRACTED BY THE CITY OF FORT LAUDERDALE.
2. UTILITIES (FPL, AT&T AND COMCAST) TRANSFORMERS, HANDHOLES AND PEDESTALS HAVE BEEN LOCATED IN ACCORDANCE WITH PRELIMINARY SCHEMATIC DRAWINGS PROVIDED TO THE ENGINEER DURING DESIGN DEVELOPMENT PHASE. FINAL LOCATIONS TO BE REVIEWED, APPROVED/ACCEPTED BY EACH UTILITY COMPANY FOR FINAL CONSTRUCTION DOCUMENT PHASE.
3. PLANS INDICATE THE UNDERGROUNDING CONDUITS AND NECESSARY WORK WITHIN THE STREET R/W ONLY. CONTRACTOR TO REFER TO EACH UTILITIES PLANS FOR ROUTING FROM TRANSFORMERS, HANDHOLES AND PEDESTALS TO THE INDIVIDUAL RESIDENCE SERVICE POINTS.

GRAPHIC SCALE
20 0 10 20 40 80
(IN FEET)
1 inch = 20 ft.

LEGEND PROPOSED:

- FNC — FLORIDA POWER & LIGHT FEEDER NETWORK CABLE AND CONDUIT
- PN/C — FLORIDA POWER & LIGHT PRIMARY CABLE AND CONDUIT
- SVC — FLORIDA POWER & LIGHT SERVICE CABLE AND CONDUIT
- ATT — AT&T CONDUIT
- COST — COMCAST COMMUNICATIONS CONDUIT

- AT&T PROPOSED HANDHOLE
- COMCAST PROPOSED HANDHOLE
- CITY STREET LIGHT SPLICE BOX
- CITY STREET LIGHT FOUNDATION
- CITY HANDHOLE
- PROPOSED BORE PIT

- FP&L SPLICE BOX
- FP&L FEEDER SPLICE BOX
- FP&L SWITCH CABINET
- FP&L TRANSFORMERS (PROPOSED)
- FP&L TRANSFORMERS (EXISTING)

- EXISTING PAVEMENT
- FP&L FUSE CABINET
- FP&L CAPACITOR BANK
- FP&L SPLICE BOX
- FP&L HANDHOLE

BID SET

CITY OF FORT LAUDERDALE
PUBLIC WORKS DEPARTMENT
ENGINEERING & ARCHITECTURE
100 North Andrews Avenue, Fort Lauderdale, Florida 33301

NO	DATE	BY	CHK'D	DESCRIPTION

PROJECT # 11715
LAS OLAS ISLES UNDERGROUNDING
O/H TO U/G CONVERSION
COCONUT ISLES DRIVE
PLAN

SHEET NO. 13
TOTAL: 30
CAD FILE: 11715-BID-MULTI-PLAN
DRAWING FILE NO. 4-136-04

C:\USERS\JONAGR\ONEDRIVE\DESKTOP\JONATCH\BID\11715-BID-MULTI-PLAN.DWG

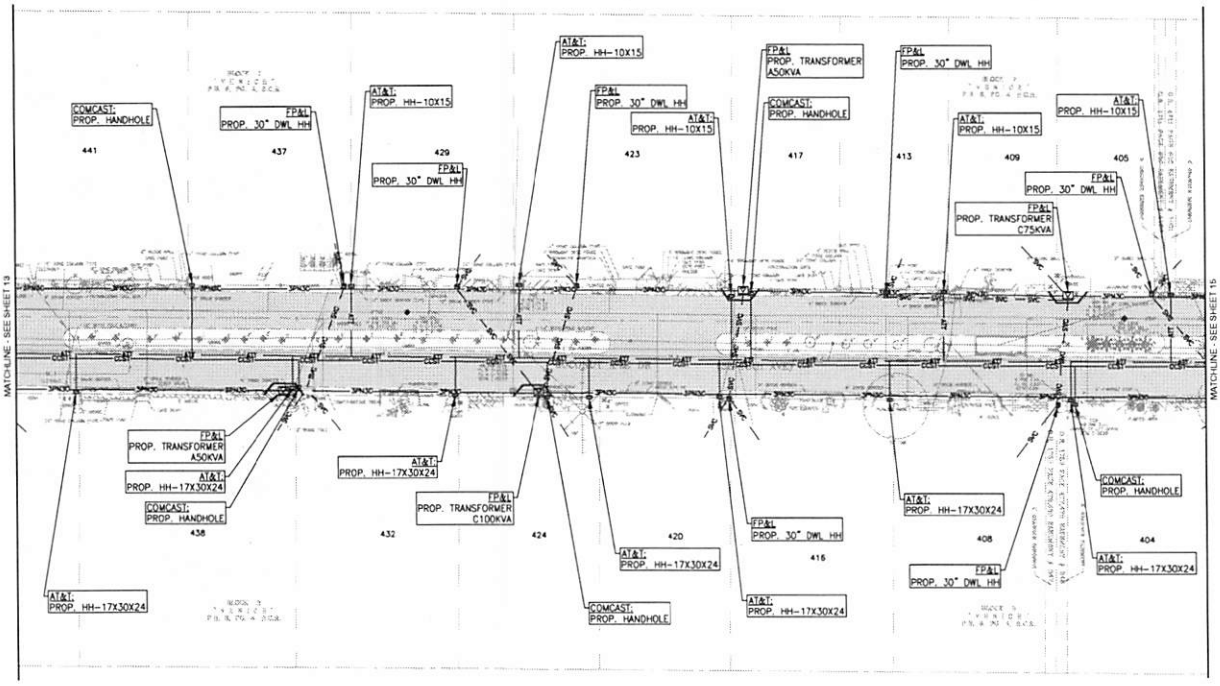

NOTES:

1. THE CONDUIT ALIGNMENT SHOWN IS PRELIMINARY. FINAL ALIGNMENT TO BE BASED ON RESULTS OF SOFT DIG POT HOLES CONTRACTED BY THE CITY OF FORT LAUDERDALE.
2. UTILITIES (FPL, AT&T AND COMCAST) TRANSFORMERS, HANDHOLES AND PEDESTALS HAVE BEEN LOCATED IN ACCORDANCE WITH PRELIMINARY SCHEMATIC DRAWINGS PROVIDED TO THE ENGINEER DURING DESIGN DEVELOPMENT PHASE. FINAL LOCATIONS TO BE REVIEWED, APPROVED/ACCEPTED BY EACH UTILITY COMPANY FOR FINAL CONSTRUCTION DOCUMENT PHASE.
3. PLANS INDICATE THE UNDERGROUNDING CONDUITS AND NECESSARY WORK WITHIN THE STREET R/W ONLY. CONTRACTOR TO REFER TO EACH UTILITIES PLANS FOR ROUTING FROM TRANSFORMERS, HANDHOLES AND PEDESTALS TO THE INDIVIDUAL RESIDENCE SERVICE POINTS.

GRAPHIC SCALE
20 0 10 20 40 80
(IN FEET)
1 inch = 20 ft.

LEGEND PROPOSED:

- FNC — FLORIDA POWER & LIGHT FEEDER NETWORK CABLE AND CONDUIT
- #PN#C — FLORIDA POWER & LIGHT PRIMARY CABLE AND CONDUIT
- SVC — FLORIDA POWER & LIGHT SERVICE CABLE AND CONDUIT
- ATT — AT&T CONDUIT
- CCST — COMCAST COMMUNICATIONS CONDUIT
- AT&T PROPOSED HANDHOLE
- COMCAST PROPOSED HANDHOLE
- CITY STREET LIGHT SPLICE BOX
- CITY STREET LIGHT FOUNDATION
- CITY HANDHOLE
- PROPOSED BORE PIT
- FP&L SPLICE BOX
- FP&L FEEDER SPLICE BOX
- FP&L SWITCH CABINET
- FP&L TRANSFORMERS (PROPOSED)
- FP&L TRANSFORMERS (EXISTING)
- EXISTING PAVEMENT
- FP&L FUSE CABINET
- FP&L CAPACITOR BANK
- FP&L SPLICE BOX
- FP&L HANDHOLE

BID SET

CITY OF FORT LAUDERDALE
PUBLIC WORKS DEPARTMENT
ENGINEERING & ARCHITECTURE
100 North Andrews Avenue, Fort Lauderdale, Florida 33301

REVISIONS

NO.	DATE	BY	CHK'D	DESCRIPTION

PROJECT # 11715
LAS OLAS ISLES UNDERGROUNDING
O/H TO U/G CONVERSION
COCONUT ISLES DRIVE
PLAN

SHEET NO. 14
TOTAL: 50
CAD FILE: 11715-BID-MULTI-PLAN
DRAWING FILE NO. 4-136-04

C:\USERS\CRAGB\ONEDRIVE\DESKTOP\SCRATCH\BID\11715-BID-MULTI-PLAN.DWG

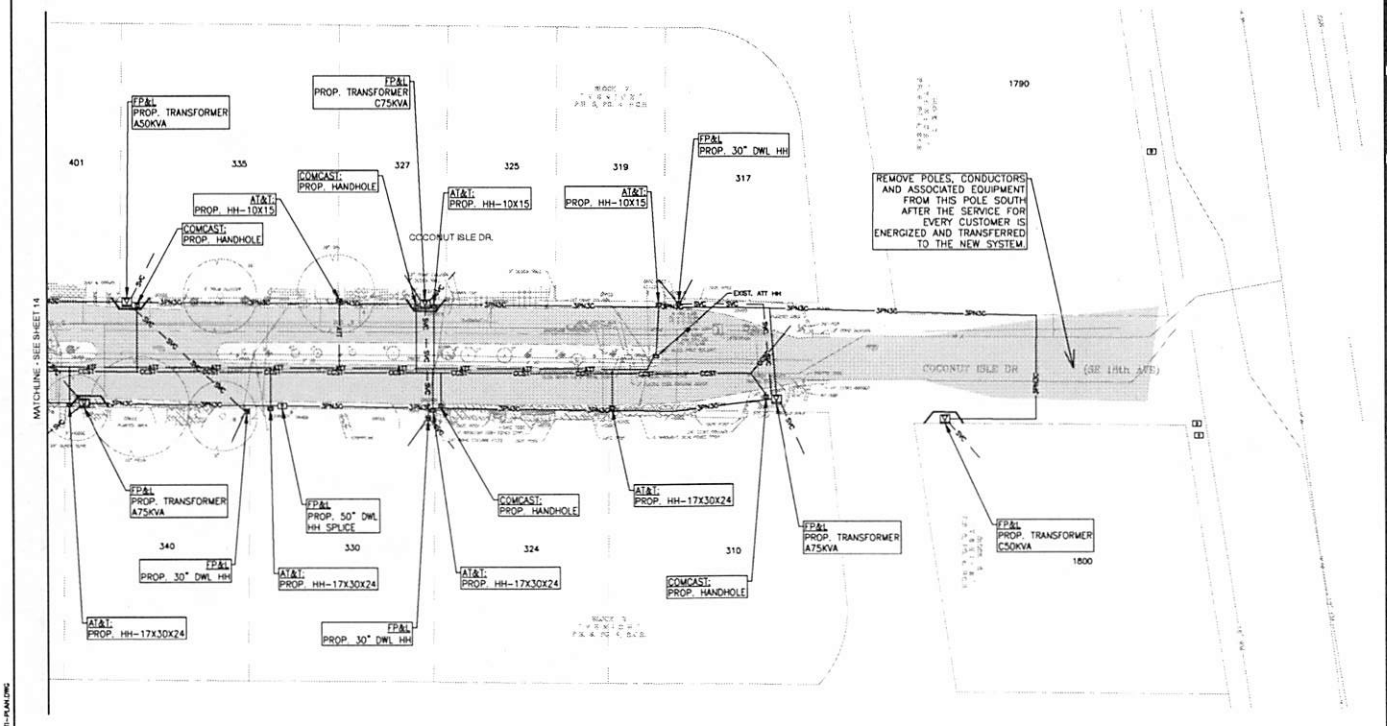

NOTES:

1. THE CONDUIT ALIGNMENT SHOWN IS PRELIMINARY. FINAL ALIGNMENT TO BE BASED ON RESULTS OF SOFT DIG POT HOLES CONTRACTED BY THE CITY OF FORT LAUDERDALE.
2. UTILITIES (FPL, AT&T AND COMCAST) TRANSFORMERS, HANDHOLES AND PEDESTALS HAVE BEEN LOCATED IN ACCORDANCE WITH PRELIMINARY SCHEMATIC DRAWINGS PROVIDED TO THE ENGINEER DURING DESIGN DEVELOPMENT PHASE. FINAL LOCATIONS TO BE REVIEWED, APPROVED/ACCEPTED BY EACH UTILITY COMPANY FOR FINAL CONSTRUCTION DOCUMENT PHASE.
3. PLANS INDICATE THE UNDERGROUNDING CONDUITS AND NECESSARY WORK WITHIN THE STREET R/W ONLY. CONTRACTOR TO REFER TO EACH UTILITIES PLANS FOR ROUTING FROM TRANSFORMERS, HANDHOLES AND PEDESTALS TO THE INDIVIDUAL RESIDENCE SERVICE POINTS.

GRAPHIC SCALE
20 0 10 20 40 80
(IN FEET)
1 inch = 20 ft.

LEGEND PROPOSED:

- FNC — FLORIDA POWER & LIGHT FEEDER NETWORK CABLE AND CONDUIT
- FP&C — FLORIDA POWER & LIGHT PRIMARY CABLE AND CONDUIT
- SVC — FLORIDA POWER & LIGHT SERVICE CABLE AND CONDUIT
- ATT — AT&T CONDUIT
- CCST — COMCAST COMMUNICATIONS CONDUIT

- AT&T PROPOSED HANDHOLE
- COMCAST PROPOSED HANDHOLE
- CITY STREET LIGHT SPLICE BOX
- CITY STREET LIGHT FOUNDATION
- CITY HANDHOLE
- PROPOSED BORE PIT

- FP&L SPLICE BOX
- FP&L FEEDER SPLICE BOX
- FP&L SWITCH CABINET
- FP&L TRANSFORMERS (PROPOSED)
- FP&L TRANSFORMERS (EXISTING)

- EXISTING PAVEMENT
- FP&L FUSE CABINET
- FP&L CAPACITOR BANK
- FP&L SPLICE BOX
- FP&L HANDHOLE

BID SET

CITY OF FORT LAUDERDALE
PUBLIC WORKS DEPARTMENT
ENGINEERING & ARCHITECTURE
[illegible] North Andrews Avenue, Fort Lauderdale, Florida 33311

NO	DATE	BY	CHK'D	DESCRIPTION

PROJECT # 11715
LAS OLAS ISLES UNDERGROUNDING
O/H TO U/G CONVERSION
COCONUT ISLES DRIVE
PLAN

SHEET NO.
15
TOTAL
50

CAD FILE:
11715-BID-MULTI-PLAN
DRAWING FILE NO.
4-138-94

C:\USERS\CHAGE\ONEDRIVE\DESKTOP\SCRATCH\BID\11715-BID-MULTI-PLAN.DWG

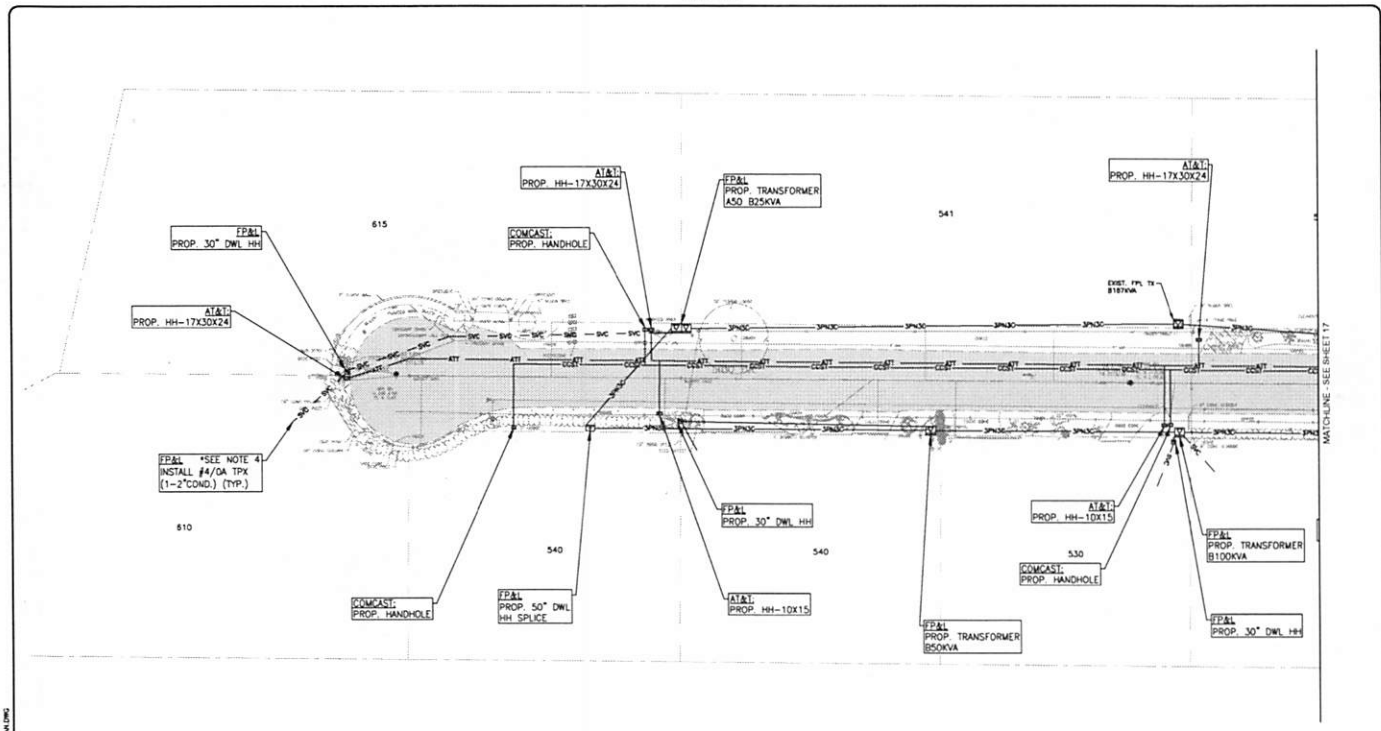

NOTES:

1. THE CONDUIT ALIGNMENT SHOWN IS PRELIMINARY. FINAL ALIGNMENT TO BE BASED ON RESULTS OF SOFT DIG POT HOLES CONTRACTED BY THE CITY OF FORT LAUDERDALE.
2. UTILITIES (FPL, AT&T AND COMCAST) TRANSFORMERS, HANDHOLES AND PEDESTALS HAVE BEEN LOCATED IN ACCORDANCE WITH PRELIMINARY SCHEMATIC DRAWINGS PROVIDED TO THE ENGINEER DURING DESIGN DEVELOPMENT PHASE. FINAL LOCATIONS TO BE REVIEWED, APPROVED/ACCEPTED BY EACH UTILITY COMPANY FOR FINAL CONSTRUCTION DOCUMENT PHASE.
3. PLANS INDICATE THE UNDERGROUNDING CONDUITS AND NECESSARY WORK WITHIN THE STREET R/W ONLY. CONTRACTOR TO REFER TO EACH UTILITIES PLANS FOR ROUTING FROM TRANSFORMERS, HANDHOLES AND PEDESTALS TO THE INDIVIDUAL RESIDENCE SERVICE POINTS.

GRAPHIC SCALE
20 0 10 20 40 80
(IN FEET)
1 inch = 20 ft.

LEGEND PROPOSED:

- FNC — FLORIDA POWER & LIGHT FEEDER NETWORK CABLE AND CONDUIT
- #PN#C — FLORIDA POWER & LIGHT PRIMARY CABLE AND CONDUIT
- SVC — FLORIDA POWER & LIGHT SERVICE CABLE AND CONDUIT
- ATT — AT&T CONDUIT
- CCST — COMCAST COMMUNICATIONS CONDUIT

- AT&T PROPOSED HANDHOLE
- COMCAST PROPOSED HANDHOLE
- CITY STREET LIGHT SPLICE BOX
- CITY STREET LIGHT FOUNDATION
- CITY HANDHOLE
- PROPOSED BORE PIT

- FP&L SPLICE BOX
- FP&L FEEDER SPLICE BOX
- FP&L SWITCH CABINET
- FP&L TRANSFORMERS (PROPOSED)
- FP&L TRANSFORMERS (EXISTING)

- EXISTING PAVEMENT
- FP&L FUSE CABINET
- FP&L CAPACITOR BANK
- FP&L SPLICE BOX
- FP&L HANDHOLE

BID SET

CITY OF FORT LAUDERDALE
PUBLIC WORKS DEPARTMENT
ENGINEERING & ARCHITECTURE
100 North Andrews Avenue, Fort Lauderdale, Florida 33301

REVISIONS

NO.	DATE	BY (INIT.)	DESCRIPTION

PROJECT # 11715
LAS OLAS ISLES UNDERGROUNDING
O/H TO U/G CONVERSION
LIDO DRIVE
PLAN

SHEET NO. 16
TOTAL: 50
CAD FILE: 11715-BID-MULTI-PLAN
DRAWING FILE NO. 4-138-04

C:\USERS\CRMAR\ONEDRIVE\DESKTOP\SCRATCH\BID\11715-BID-MULTI-PLAN.DWG

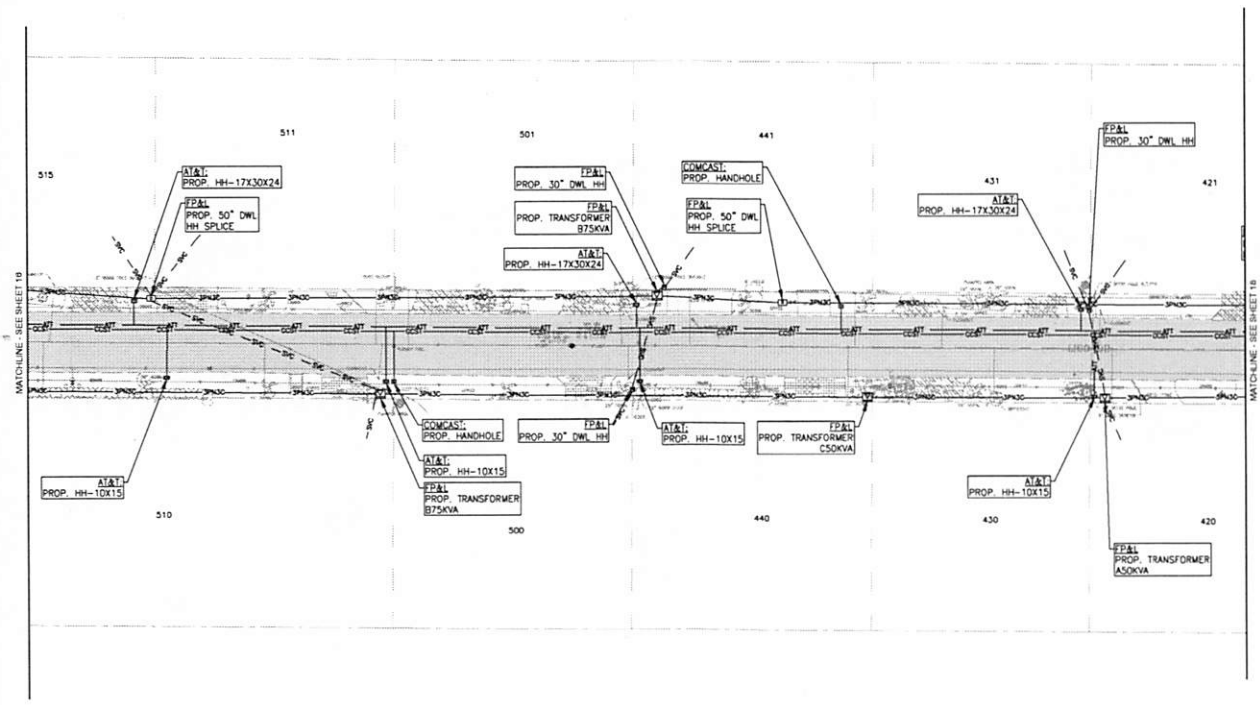

NOTES:

1. THE CONDUIT ALIGNMENT SHOWN IS PRELIMINARY. FINAL ALIGNMENT TO BE BASED ON RESULTS OF SOFT DIG POT HOLES CONTRACTED BY THE CITY OF FORT LAUDERDALE.
2. UTILITIES (FPL, AT&T AND COMCAST) TRANSFORMERS, HANDHOLES AND PEDESTALS HAVE BEEN LOCATED IN ACCORDANCE WITH PRELIMINARY SCHEMATIC DRAWINGS PROVIDED TO THE ENGINEER DURING DESIGN DEVELOPMENT PHASE. FINAL LOCATIONS TO BE REVIEWED, APPROVED/ACCEPTED BY EACH UTILITY COMPANY FOR FINAL CONSTRUCTION DOCUMENT PHASE.
3. PLANS INDICATE THE UNDERGROUNDING CONDUITS AND NECESSARY WORK WITHIN THE STREET R/W ONLY. CONTRACTOR TO REFER TO EACH UTILITIES PLANS FOR ROUTING FROM TRANSFORMERS, HANDHOLES AND PEDESTALS TO THE INDIVIDUAL RESIDENCE SERVICE POINTS.

GRAPHIC SCALE
20 0 10 20 40 80
(IN FEET)
1 inch = 20 ft.

LEGEND PROPOSED:

- FNC — FLORIDA POWER & LIGHT FEEDER NETWORK CABLE AND CONDUIT
- FPN/FC — FLORIDA POWER & LIGHT PRIMARY CABLE AND CONDUIT
- SVC — FLORIDA POWER & LIGHT SERVICE CABLE AND CONDUIT
- ATT — AT&T CONDUIT
- CCST — COMCAST COMMUNICATIONS CONDUIT
- AT&T PROPOSED HANDHOLE
- COMCAST PROPOSED HANDHOLE
- CITY STREET LIGHT SPLICE BOX
- CITY STREET LIGHT FOUNDATION
- CITY HANDHOLE
- PROPOSED BORE PIT
- FP&L SPLICE BOX
- FP&L FEEDER SPLICE BOX
- FP&L SWITCH CABINET
- FP&L TRANSFORMERS (PROPOSED)
- FP&L TRANSFORMERS (EXISTING)
- EXISTING PAVEMENT
- FP&L FUSE CABINET
- FP&L CAPACITOR BANK
- FP&L SPLICE BOX
- FP&L HANDHOLE

BID SET

CITY OF FORT LAUDERDALE
PUBLIC WORKS DEPARTMENT
ENGINEERING & ARCHITECTURE
100 North Andrews Avenue, Fort Lauderdale, Florida 33301

REVISIONS				
NO.	DATE	BY	CHK'D	DESCRIPTION

PROJECT # 11715
LAS OLAS ISLES UNDERGROUNDING
O/H TO U/G CONVERSION
LIDO DRIVE
PLAN

SHEET NO. 17
TOTAL 50
CAD FILE 11715-BID-MULTI-PLAN
DRAWING FILE NO. 4-136-94

C:\USERS\CRMAGB\ONEDRIVE\DESKTOP\SCRATCH\BID\11715-BID-MULTI-PLAN.DWG

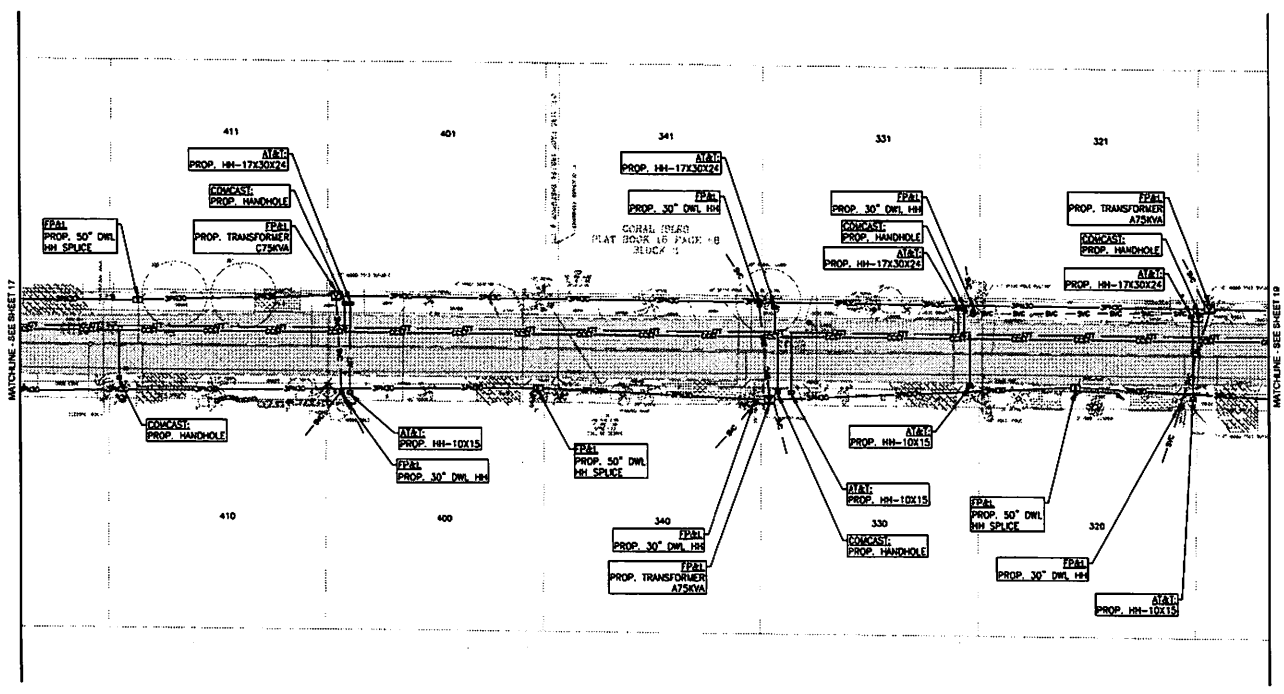

NOTES:

1. THE CONDUIT ALIGNMENT SHOWN IS PRELIMINARY. FINAL ALIGNMENT TO BE BASED ON RESULTS OF SOFT DIG POT HOLES CONTRACTED BY THE CITY OF FORT LAUDERDALE.
2. UTILITIES (FPL, AT&T AND COMCAST) TRANSFORMERS, HANDHOLES AND PEDESTALS HAVE BEEN LOCATED IN ACCORDANCE WITH PRELIMINARY SCHEMATIC DRAWINGS PROVIDED TO THE ENGINEER DURING DESIGN DEVELOPMENT PHASE. FINAL LOCATIONS TO BE REVIEWED, APPROVED/ACCEPTED BY EACH UTILITY COMPANY FOR FINAL CONSTRUCTION DOCUMENT PHASE.
3. PLANS INDICATE THE UNDERGROUNDING CONDUITS AND NECESSARY WORK WITHIN THE STREET R/W ONLY. CONTRACTOR TO REFER TO EACH UTILITIES PLANS FOR ROUTING FROM TRANSFORMERS, HANDHOLES AND PEDESTALS TO THE INDIVIDUAL RESIDENCE SERVICE POINTS.

LEGEND PROPOSED:

- FNC — FLORIDA POWER & LIGHT FEEDER NETWORK CABLE AND CONDUIT
- PN/C — FLORIDA POWER & LIGHT PRIMARY CABLE AND CONDUIT
- SVC — FLORIDA POWER & LIGHT SERVICE CABLE AND CONDUIT
- ATT — AT&T CONDUIT
- CCST — COMCAST COMMUNICATIONS CONDUIT
- AT&T PROPOSED HANDHOLE
- COMCAST PROPOSED HANDHOLE
- CITY STREET LIGHT SPLICE BOX
- CITY STREET LIGHT FOUNDATION
- CITY HANDHOLE
- PROPOSED BORE PIT
- FP&L SPLICE BOX
- FP&L FEEDER SPLICE BOX
- FP&L SWITCH CABINET
- FP&L TRANSFORMERS (PROPOSED)
- FP&L TRANSFORMERS (EXISTING)
- EXISTING PAVEMENT
- FP&L FUSE CABINET
- FP&L CAPACITOR BANK
- FP&L SPLICE BOX
- FP&L HANDHOLE

GRAPHIC SCALE
30 0 10 20 40 60
(IN FEET)
1 inch = 20 ft.

BID SET

CITY OF FORT LAUDERDALE
PUBLIC WORKS DEPARTMENT
ENGINEERING & ARCHITECTURE
100 North Andrews Avenue, Fort Lauderdale, Florida 33301

REVISIONS

PROJECT # 11715
LAS OLAS ISLES UNDERGROUNDING
O/H TO U/G CONVERSION
LIDO DRIVE
PLAN

SHEET NO. 18
TOTAL: 50
CAD FILE 11715-BID-MULTI-PLAN
DRAWING FILE NO. 4-136-04

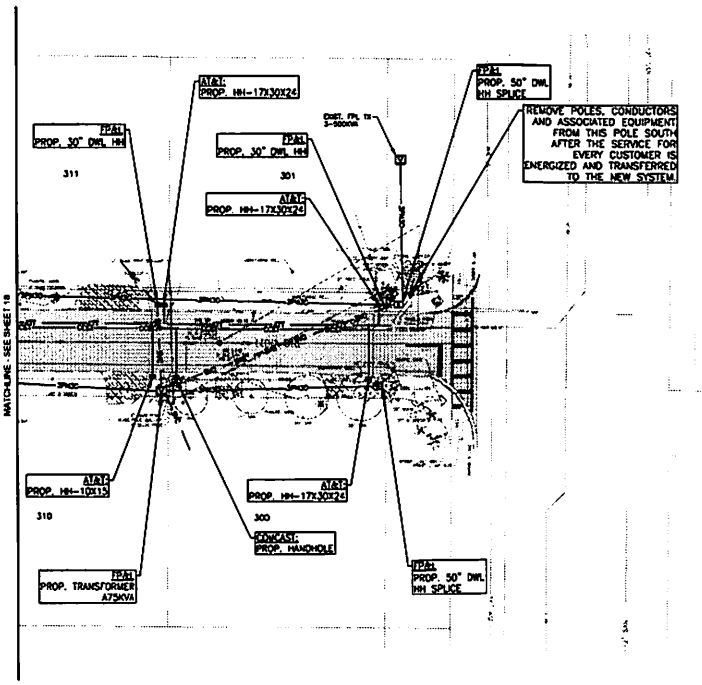

NOTES:

1. THE CONDUIT ALIGNMENT SHOWN IS PRELIMINARY. FINAL ALIGNMENT TO BE BASED ON RESULTS OF SOFT DIG POT HOLES CONTRACTED BY THE CITY OF FORT LAUDERDALE.
2. UTILITIES (FPL, AT&T AND COMCAST) TRANSFORMERS, HANDHOLES AND PEDESTALS HAVE BEEN LOCATED IN ACCORDANCE WITH PRELIMINARY SCHEMATIC DRAWINGS PROVIDED TO THE ENGINEER DURING DESIGN DEVELOPMENT PHASE. FINAL LOCATIONS TO BE REVIEWED, APPROVED/ACCEPTED BY EACH UTILITY COMPANY FOR FINAL CONSTRUCTION DOCUMENT PHASE.
3. PLANS INDICATE THE UNDERGROUNDING CONDUITS AND NECESSARY WORK WITHIN THE STREET R/W ONLY. CONTRACTOR TO REFER TO EACH UTILITIES PLANS FOR ROUTING FROM TRANSFORMERS, HANDHOLES AND PEDESTALS TO THE INDIVIDUAL RESIDENCE SERVICE POINTS.

GRAPHIC SCALE

(IN FEET)

LEGEND PROPOSED:

- FNC — FLORIDA POWER & LIGHT FEEDER NETWORK CABLE AND CONDUIT
- #PH/C — FLORIDA POWER & LIGHT PRIMARY CABLE AND CONDUIT
- SVC — FLORIDA POWER & LIGHT SERVICE CABLE AND CONDUIT
- ATT — AT&T CONDUIT
- CCST — COMCAST COMMUNICATIONS CONDUIT

- AT&T PROPOSED HANDHOLE
- COMCAST PROPOSED HANDHOLE
- CITY STREET LIGHT SPLICE BOX
- CITY STREET LIGHT FOUNDATION
- CITY HANDHOLE
- PROPOSED BORE PIT

- FP&L SPLICE BOX
- FP&L FEEDER SPLICE BOX
- FP&L SWITCH CABINET
- FP&L TRANSFORMERS (PROPOSED)
- FP&L TRANSFORMERS (EXISTING)

- EXISTING PAVEMENT
- FP&L FUSE CABINET
- FP&L CAPACITOR BANK
- FP&L SPLICE BOX
- FP&L HANDHOLE

BID SET

CITY OF FORT LAUDERDALE
PUBLIC WORKS DEPARTMENT
ENGINEERING & ARCHITECTURE

PROJECT # 11715
LAS OLAS ISLES UNDERGROUNDING
O/H TO U/G CONVERSION
LIDO DRIVE
PLAN

19

C:\USERS\CDRIGS\ONEDRIVE\DESKTOP\LOSROP\LAS\OLAS\11715-BID-MAILS-PLAN.DWG

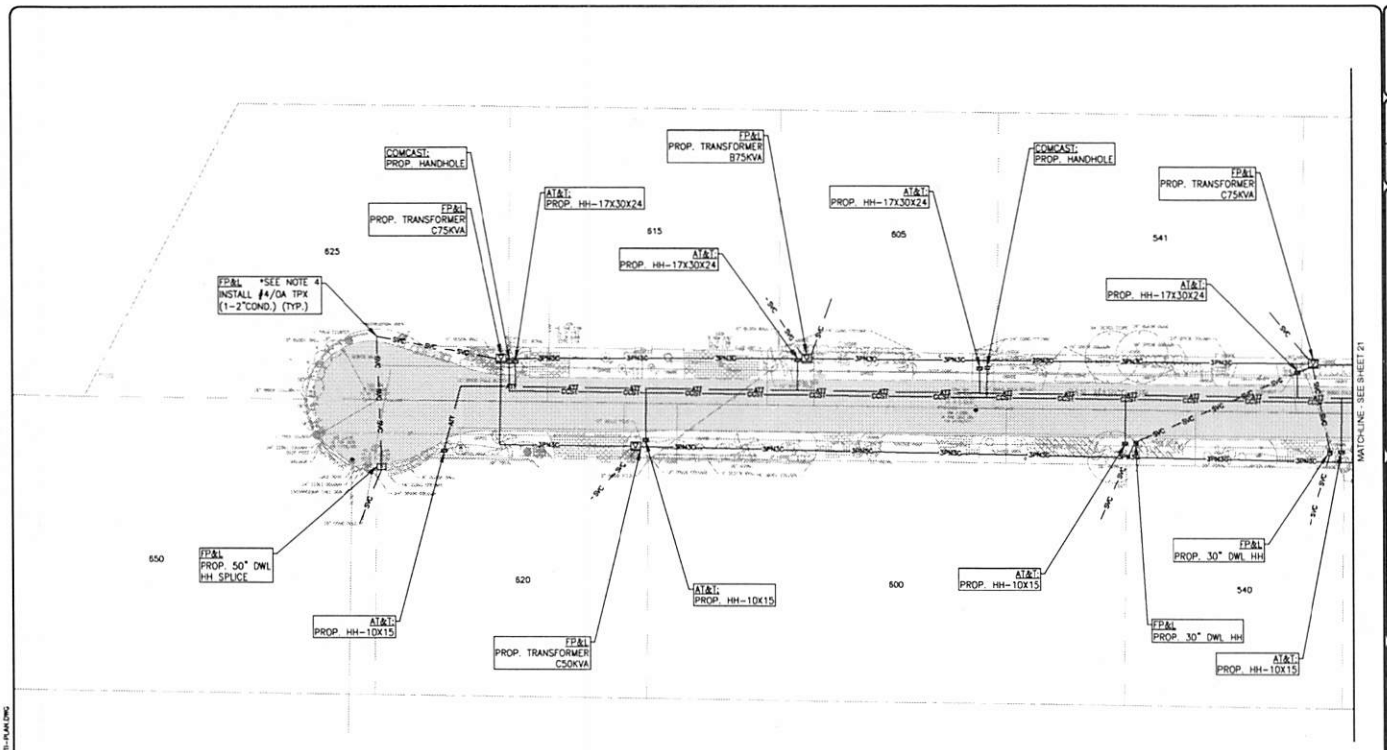

NOTES:

1. THE CONDUIT ALIGNMENT SHOWN IS PRELIMINARY. FINAL ALIGNMENT TO BE BASED ON RESULTS OF SOFT DIG POT HOLES CONTRACTED BY THE CITY OF FORT LAUDERDALE.
2. UTILITIES (FPL, AT&T AND COMCAST) TRANSFORMERS, HANDHOLES AND PEDESTALS HAVE BEEN LOCATED IN ACCORDANCE WITH PRELIMINARY SCHEMATIC DRAWINGS PROVIDED TO THE ENGINEER DURING DESIGN DEVELOPMENT PHASE. FINAL LOCATIONS TO BE REVIEWED, APPROVED/ACCEPTED BY EACH UTILITY COMPANY FOR FINAL CONSTRUCTION DOCUMENT PHASE.
3. PLANS INDICATE THE UNDERGROUNDING CONDUITS AND NECESSARY WORK WITHIN THE STREET R/W ONLY. CONTRACTOR TO REFER TO EACH UTILITIES PLANS FOR ROUTING FROM TRANSFORMERS, HANDHOLES AND PEDESTALS TO THE INDIVIDUAL RESIDENCE SERVICE POINTS.

GRAPHIC SCALE
20 0 10 20 40 80
(IN FEET)
1 inch = 20 ft.

LEGEND PROPOSED:

- FNC — FLORIDA POWER & LIGHT FEEDER NETWORK CABLE AND CONDUIT
- FPN/C — FLORIDA POWER & LIGHT PRIMARY CABLE AND CONDUIT
- SVC — FLORIDA POWER & LIGHT SERVICE CABLE AND CONDUIT
- ATT — AT&T CONDUIT
- CCST — COMCAST COMMUNICATIONS CONDUIT

- AT&T PROPOSED HANDHOLE
- COMCAST PROPOSED HANDHOLE
- CITY STREET LIGHT SPLICE BOX
- CITY STREET LIGHT FOUNDATION
- CITY HANDHOLE
- PROPOSED BORE PIT

- FP&L SPLICE BOX
- FP&L FEEDER SPLICE BOX
- FP&L SWITCH CABINET
- FP&L TRANSFORMERS (PROPOSED)
- FP&L TRANSFORMERS (EXISTING)

- EXISTING PAVEMENT
- FP&L FUSE CABINET
- FP&L CAPACITOR BANK
- FP&L SPLICE BOX
- FP&L HANDHOLE

BID SET

CITY OF FORT LAUDERDALE
PUBLIC WORKS DEPARTMENT
ENGINEERING & ARCHITECTURE
100 North Andrews Avenue, Fort Lauderdale, Florida 33301

NO.	DATE	BY	CHK'D	DESCRIPTION

PROJECT # 11715
LAS OLAS ISLES UNDERGROUNDING
O/H TO U/G CONVERSION
SAN MARCO DRIVE
PLAN

SHEET NO.
20
TOTAL: 50

CAD FILE:
11715-BID-MULTI-PLAN

DRAWING FILE NO.
4-136-04

C:\USERS\LOMAGER\ONEDRIVE\DESKTOP\SCRATCH\REV\11715-BID-MULTI-PLAN.DWG

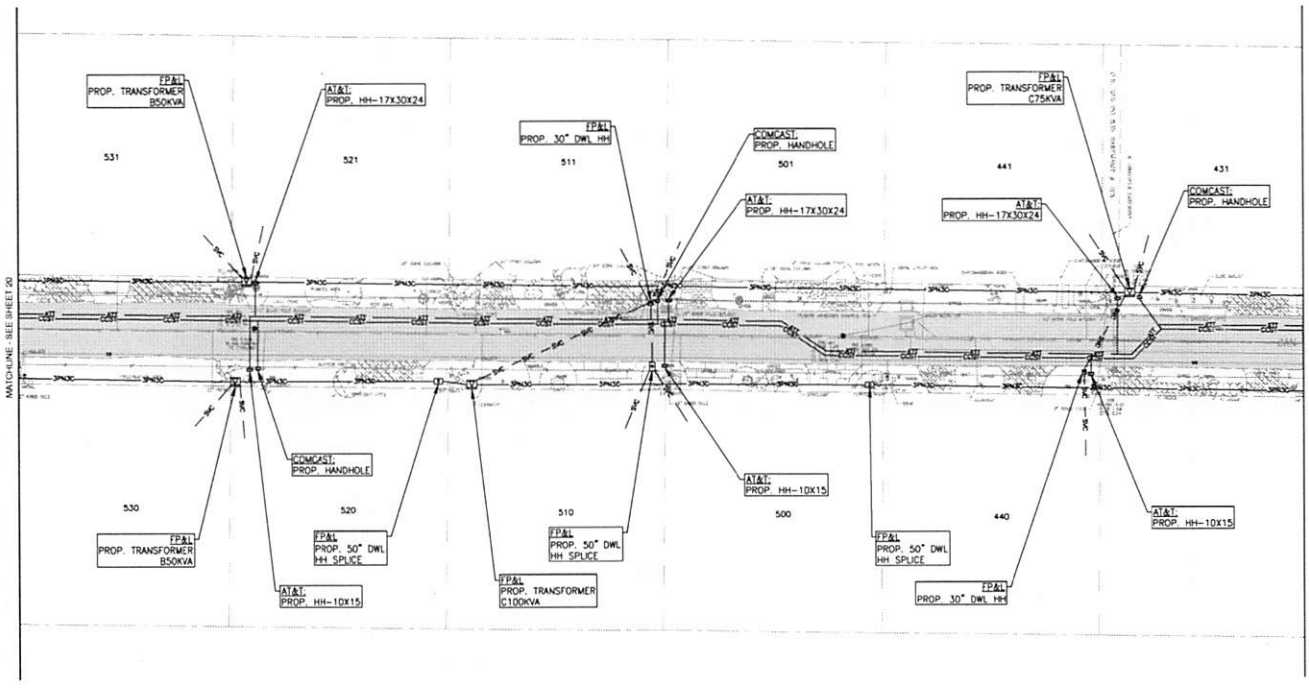

NOTES:

1. THE CONDUIT ALIGNMENT SHOWN IS PRELIMINARY. FINAL ALIGNMENT TO BE BASED ON RESULTS OF SOFT DIG POT HOLES CONTRACTED BY THE CITY OF FORT LAUDERDALE.
2. UTILITIES (FPL, AT&T AND COMCAST) TRANSFORMERS, HANDHOLES AND PEDESTALS HAVE BEEN LOCATED IN ACCORDANCE WITH PRELIMINARY SCHEMATIC DRAWINGS PROVIDED TO THE ENGINEER DURING DESIGN DEVELOPMENT PHASE. FINAL LOCATIONS TO BE REVIEWED, APPROVED/ACCEPTED BY EACH UTILITY COMPANY FOR FINAL CONSTRUCTION DOCUMENT PHASE.
3. PLANS INDICATE THE UNDERGROUNDING CONDUITS AND NECESSARY WORK WITHIN THE STREET R/W ONLY. CONTRACTOR TO REFER TO EACH UTILITIES PLANS FOR ROUTING FROM TRANSFORMERS, HANDHOLES AND PEDESTALS TO THE INDIVIDUAL RESIDENCE SERVICE POINTS.

GRAPHIC SCALE
20 0 10 20 40 80
(IN FEET)
1 inch = 20 ft.

LEGEND PROPOSED:

- FNC — FLORIDA POWER & LIGHT FEEDER NETWORK CABLE AND CONDUIT
- FP&LC — FLORIDA POWER & LIGHT PRIMARY CABLE AND CONDUIT
- SVC — FLORIDA POWER & LIGHT SERVICE CABLE AND CONDUIT
- ATT — AT&T CONDUIT
- CCST — COMCAST COMMUNICATIONS CONDUIT

- AT&T PROPOSED HANDHOLE
- COMCAST PROPOSED HANDHOLE
- CITY STREET LIGHT SPLICE BOX
- CITY STREET LIGHT FOUNDATION
- CITY HANDHOLE
- PROPOSED BORE PIT

- FP&L SPLICE BOX
- FP&L FEEDER SPLICE BOX
- FP&L SWITCH CABINET
- FP&L TRANSFORMERS (PROPOSED)
- FP&L TRANSFORMERS (EXISTING)

- EXISTING PAVEMENT
- FP&L FUSE CABINET
- FP&L CAPACITOR BANK
- FP&L SPLICE BOX
- FP&L HANDHOLE

BID SET

CITY OF FORT LAUDERDALE
PUBLIC WORKS DEPARTMENT
ENGINEERING & ARCHITECTURE
100 North Andrews Avenue, Fort Lauderdale, Florida 33301

NO	DATE	BY	CHK'D	DESCRIPTION

PROJECT # 11715
LAS OLAS ISLES UNDERGROUNDING
O/H TO U/G CONVERSION
SAN MARCO DRIVE
PLAN

SHEET NO.
21
TOTAL: 50

CAD FILE
11715-BID-MULTI-PLAN

DRAWING FILE NO.
4-136-04

C:\USERS\CMAGRI\ONEDRIVE\DESKTOP\SCRATCH\BID\11715-BID-MULTI-PLAN.DWG

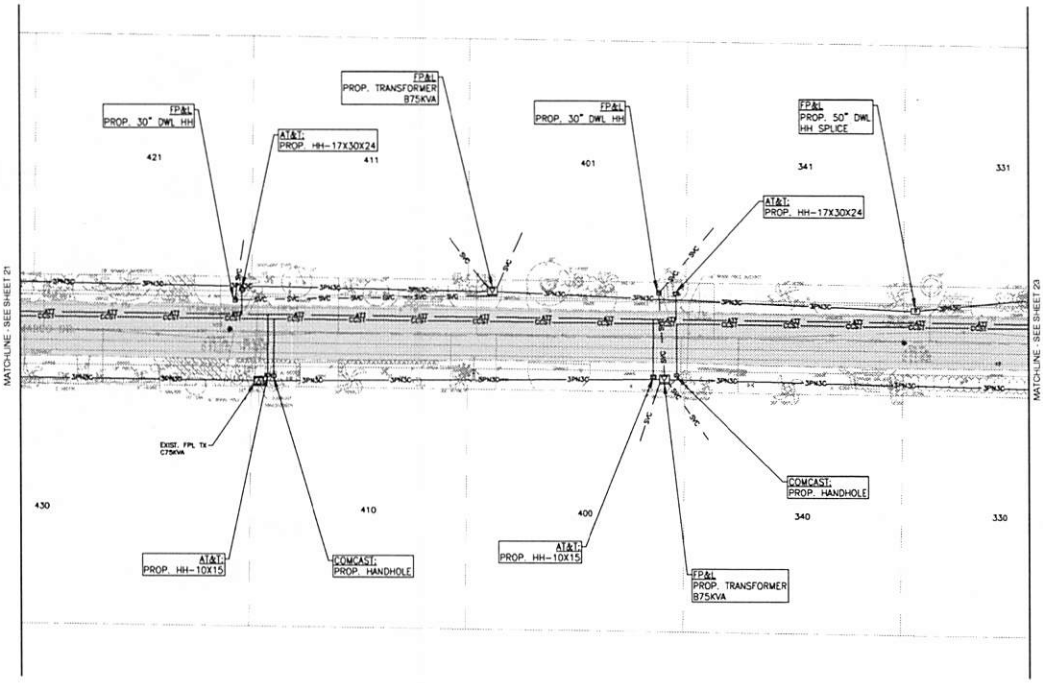

NOTES:

1. THE CONDUIT ALIGNMENT SHOWN IS PRELIMINARY. FINAL ALIGNMENT TO BE BASED ON RESULTS OF SOFT DIG POT HOLES CONTRACTED BY THE CITY OF FORT LAUDERDALE.
2. UTILITIES (FPL, AT&T AND COMCAST) TRANSFORMERS, HANDHOLES AND PEDESTALS HAVE BEEN LOCATED IN ACCORDANCE WITH PRELIMINARY SCHEMATIC DRAWINGS PROVIDED TO THE ENGINEER DURING DESIGN DEVELOPMENT PHASE. FINAL LOCATIONS TO BE REVIEWED, APPROVED/ACCEPTED BY EACH UTILITY COMPANY FOR FINAL CONSTRUCTION DOCUMENT PHASE.
3. PLANS INDICATE THE UNDERGROUNDING CONDUITS AND NECESSARY WORK WITHIN THE STREET R/W ONLY. CONTRACTOR TO REFER TO EACH UTILITIES PLANS FOR ROUTING FROM TRANSFORMERS, HANDHOLES AND PEDESTALS TO THE INDIVIDUAL RESIDENCE SERVICE POINTS.

GRAPHIC SCALE
20 0 10 20 40 80
(IN FEET)
1 inch = 20 ft.

LEGEND PROPOSED:

- FNC — FLORIDA POWER & LIGHT FEEDER NETWORK CABLE AND CONDUIT
- FPNPC — FLORIDA POWER & LIGHT PRIMARY CABLE AND CONDUIT
- SVC — FLORIDA POWER & LIGHT SERVICE CABLE AND CONDUIT
- ATT — AT&T CONDUIT
- CCST — COMCAST COMMUNICATIONS CONDUIT

- AT&T PROPOSED HANDHOLE
- COMCAST PROPOSED HANDHOLE
- CITY STREET LIGHT SPLICE BOX
- CITY STREET LIGHT FOUNDATION
- CITY HANDHOLE
- PROPOSED BORE PIT

- FP&L SPLICE BOX
- FP&L FEEDER SPLICE BOX
- FP&L SWITCH CABINET
- FP&L TRANSFORMERS (PROPOSED)
- FP&L TRANSFORMERS (EXISTING)

- EXISTING PAVEMENT
- FP&L FUSE CABINET
- FP&L CAPACITOR BANK
- FP&L SPLICE BOX
- FP&L HANDHOLE

BID SET

CITY OF FORT LAUDERDALE
PUBLIC WORKS DEPARTMENT
ENGINEERING & ARCHITECTURE
100 North Andrews Avenue, Fort Lauderdale, Florida 33301

NO.	DATE	BY	CHK'D	DESCRIPTION

PROJECT # 11715
LAS OLAS ISLES UNDERGROUNDING
O/H TO U/G CONVERSION
SAN MARCO DRIVE
PLAN

SHEET NO
22
TOTAL: 50

CAD FILE:
11715-BID-MULTI-PLAN
DRAWING FILE NO.
4-138-04

C:\USERS\JONAGER\ONEDRIVE\DESKTOP\SCRATCH\BID\11715-BID-MULTI-PLAN.DWG

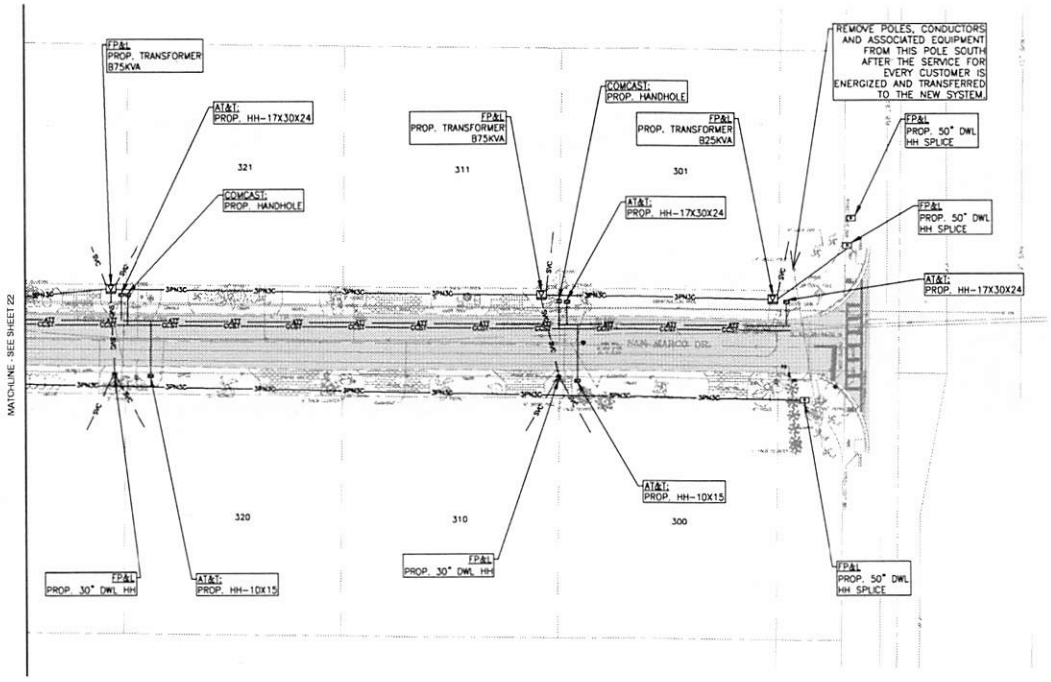

NOTES:

1. THE CONDUIT ALIGNMENT SHOWN IS PRELIMINARY. FINAL ALIGNMENT TO BE BASED ON RESULTS OF SOFT DIG POT HOLES CONTRACTED BY THE CITY OF FORT LAUDERDALE.
2. UTILITIES (FPL, AT&T AND COMCAST) TRANSFORMERS, HANDHOLES AND PEDESTALS HAVE BEEN LOCATED IN ACCORDANCE WITH PRELIMINARY SCHEMATIC DRAWINGS PROVIDED TO THE ENGINEER DURING DESIGN DEVELOPMENT PHASE. FINAL LOCATIONS TO BE REVIEWED, APPROVED,ACCEPTED BY EACH UTILITY COMPANY FOR FINAL CONSTRUCTION DOCUMENT PHASE.
3. PLANS INDICATE THE UNDERGROUNDING CONDUITS AND NECESSARY WORK WITHIN THE STREET R/W ONLY. CONTRACTOR TO REFER TO EACH UTILITIES PLANS FOR ROUTING FROM TRANSFORMERS, HANDHOLES AND PEDESTALS TO THE INDIVIDUAL RESIDENCE SERVICE POINTS.

GRAPHIC SCALE
20 0 10 20 40 80
(IN FEET)
1 inch = 20 ft.

LEGEND PROPOSED:

- FNC — FLORIDA POWER & LIGHT FEEDER NETWORK CABLE AND CONDUIT
- PNC — FLORIDA POWER & LIGHT PRIMARY CABLE AND CONDUIT
- SVC — FLORIDA POWER & LIGHT SERVICE CABLE AND CONDUIT
- ATT — AT&T CONDUIT
- CCST — COMCAST COMMUNICATIONS CONDUIT
- AT&T PROPOSED HANDHOLE
- COMCAST PROPOSED HANDHOLE
- CITY STREET LIGHT SPLICE BOX
- CITY STREET LIGHT FOUNDATION
- CITY HANDHOLE
- PROPOSED BORE PIT
- FP&L SPLICE BOX
- FP&L FEEDER SPLICE BOX
- FP&L SWITCH CABINET
- FP&L TRANSFORMERS (PROPOSED)
- FP&L TRANSFORMERS (EXISTING)
- EXISTING PAVEMENT
- FP&L FUSE CABINET
- FP&L CAPACITOR BANK
- FP&L SPLICE BOX
- FP&L HANDHOLE

BID SET

CITY OF FORT LAUDERDALE
PUBLIC WORKS DEPARTMENT
ENGINEERING & ARCHITECTURE
100 North Andrews Avenue, Fort Lauderdale, Florida 33301

NO	DATE	BY	CHK'D	DESCRIPTION

PROJECT # 11715
LAS OLAS ISLES UNDERGROUNDING
O/H TO U/G CONVERSION
SAN MARCO DRIVE
PLAN

SHEET NO.
23
TOTAL: 50

CAD FILE
11715-BID-MULTI-PLAN

DRAWING FILE NO.
4-138-94

C:\USERS\CAMAGE\ONEDRIVE\DESKTOP\LOCNATION\BID\11715-BID-MULTI-PLAN.DWG

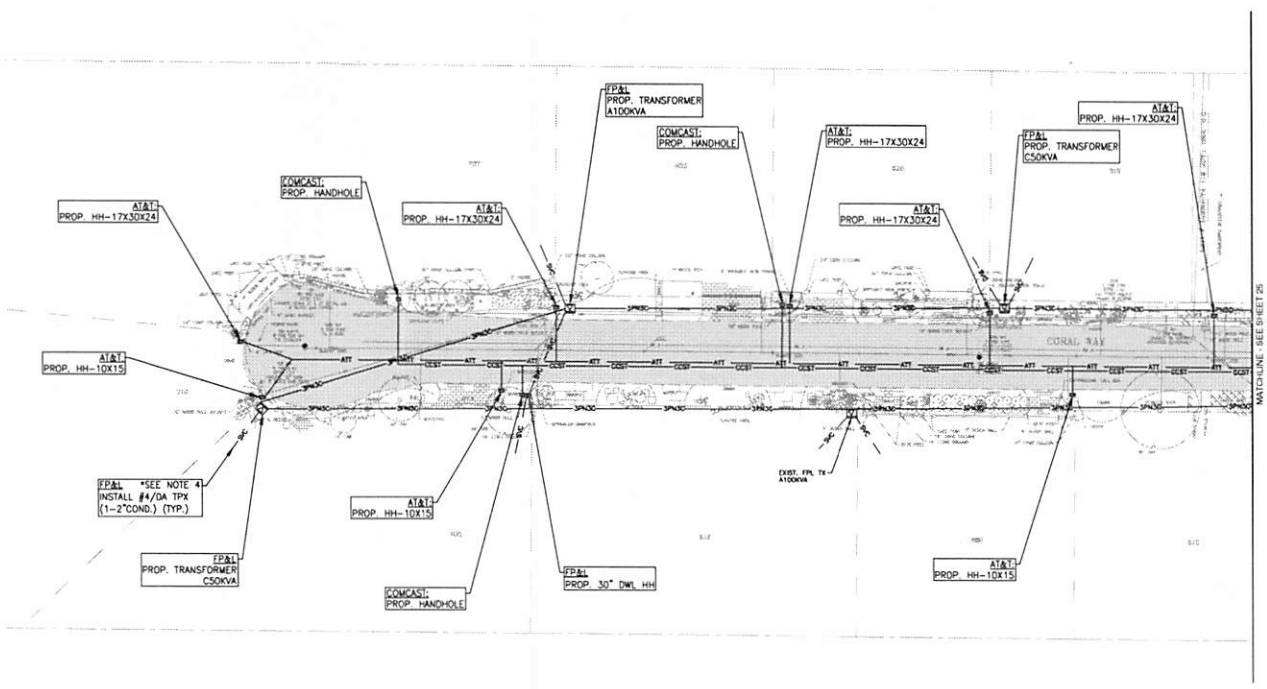

NOTES:

1. THE CONDUIT ALIGNMENT SHOWN IS PRELIMINARY. FINAL ALIGNMENT TO BE BASED ON RESULTS OF SOFT DIG POT HOLES CONTRACTED BY THE CITY OF FORT LAUDERDALE.
2. UTILITIES (FPL, AT&T AND COMCAST) TRANSFORMERS, HANDHOLES AND PEDESTALS HAVE BEEN LOCATED IN ACCORDANCE WITH PRELIMINARY SCHEMATIC DRAWINGS PROVIDED TO THE ENGINEER DURING DESIGN DEVELOPMENT PHASE. FINAL LOCATIONS TO BE REVIEWED, APPROVED/ACCEPTED BY EACH UTILITY COMPANY FOR FINAL CONSTRUCTION DOCUMENT PHASE.
3. PLANS INDICATE THE UNDERGROUNDING CONDUITS AND NECESSARY WORK WITHIN THE STREET R/W ONLY. CONTRACTOR TO REFER TO EACH UTILITIES PLANS FOR ROUTING FROM TRANSFORMERS, HANDHOLES AND PEDESTALS TO THE INDIVIDUAL RESIDENCE SERVICE POINTS.

GRAPHIC SCALE
20 0 10 20 40 80
(IN FEET)
1 inch = 20 ft.

LEGEND PROPOSED:

- FNC — FLORIDA POWER & LIGHT FEEDER NETWORK CABLE AND CONDUIT
- #PN#C — FLORIDA POWER & LIGHT PRIMARY CABLE AND CONDUIT
- SVC — FLORIDA POWER & LIGHT SERVICE CABLE AND CONDUIT
- ATT — AT&T CONDUIT
- CCST — COMCAST COMMUNICATIONS CONDUIT
- AT&T PROPOSED HANDHOLE
- COMCAST PROPOSED HANDHOLE
- CITY STREET LIGHT SPLICE BOX
- CITY STREET LIGHT FOUNDATION
- CITY HANDHOLE
- PROPOSED BORE PIT
- FP&L SPLICE BOX
- FP&L FEEDER SPLICE BOX
- FP&L SWITCH CABINET
- FP&L TRANSFORMERS (PROPOSED)
- FP&L TRANSFORMERS (EXISTING)
- EXISTING PAVEMENT
- FP&L FUSE CABINET
- FP&L CAPACITOR BANK
- FP&L SPLICE BOX
- FP&L HANDHOLE

BID SET

CITY OF FORT LAUDERDALE
PUBLIC WORKS DEPARTMENT
ENGINEERING & ARCHITECTURE
100 North Andrews Avenue, Fort Lauderdale, Florida 33301

DRAWN BY: CMD
DATE: 09/15/20
DESIGNED BY: DC
SCALE: AS NOTED
CHECKED BY: RV
FIELD BOOK:

REVISIONS

NO.	DATE	BY	CHK'D	DESCRIPTION

PROJECT # 11715
LAS OLAS ISLES UNDERGROUNDING
O/H TO U/G CONVERSION
CORAL WAY
PLAN

SHEET NO. 24
TOTAL: 50
CAD FILE: 11715-BID-MULTI-PLAN
DRAWING FILE NO. 4-136-04

C:\USERS\CRMCGI\ONEDRIVE\DESKTOP\SCRATCH\BID\11715-BID-MULTI-PLAN.DWG

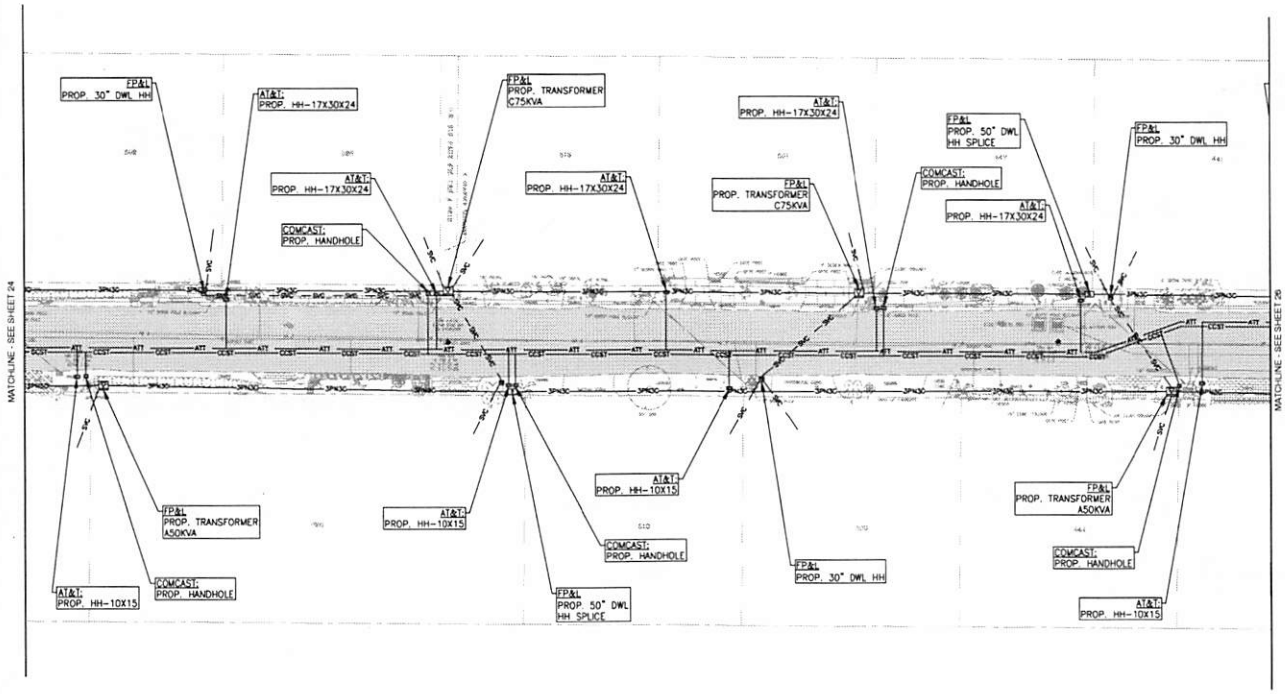

NOTES:

1. THE CONDUIT ALIGNMENT SHOWN IS PRELIMINARY. FINAL ALIGNMENT TO BE BASED ON RESULTS OF SOFT DIG POT HOLES CONTRACTED BY THE CITY OF FORT LAUDERDALE.
2. UTILITIES (FPL, AT&T AND COMCAST) TRANSFORMERS, HANDHOLES AND PEDESTALS HAVE BEEN LOCATED IN ACCORDANCE WITH PRELIMINARY SCHEMATIC DRAWINGS PROVIDED TO THE ENGINEER DURING DESIGN DEVELOPMENT PHASE. FINAL LOCATIONS TO BE REVIEWED, APPROVED/ACCEPTED BY EACH UTILITY COMPANY FOR FINAL CONSTRUCTION DOCUMENT PHASE.
3. PLANS INDICATE THE UNDERGROUNDING CONDUITS AND NECESSARY WORK WITHIN THE STREET R/W ONLY. CONTRACTOR TO REFER TO EACH UTILITIES PLANS FOR ROUTING FROM TRANSFORMERS, HANDHOLES AND PEDESTALS TO THE INDIVIDUAL RESIDENCE SERVICE POINTS.

GRAPHIC SCALE
20 0 10 20 40 80
(IN FEET)
1 inch = 20 ft.

LEGEND PROPOSED:

- FNC — FLORIDA POWER & LIGHT FEEDER NETWORK CABLE AND CONDUIT
- PNC — FLORIDA POWER & LIGHT PRIMARY CABLE AND CONDUIT
- SVC — FLORIDA POWER & LIGHT SERVICE CABLE AND CONDUIT
- ATT — AT&T CONDUIT
- CCST — COMCAST COMMUNICATIONS CONDUIT
- AT&T PROPOSED HANDHOLE
- COMCAST PROPOSED HANDHOLE
- CITY STREET LIGHT SPLICE BOX
- CITY STREET LIGHT FOUNDATION
- CITY HANDHOLE
- PROPOSED BORE PIT
- FP&L SPLICE BOX
- FP&L FEEDER SPLICE BOX
- FP&L SWITCH CABINET
- FP&L TRANSFORMERS (PROPOSED)
- FP&L TRANSFORMERS (EXISTING)
- EXISTING PAVEMENT
- FP&L FUSE CABINET
- FP&L CAPACITOR BANK
- FP&L SPLICE BOX
- FP&L HANDHOLE

BID SET

CITY OF FORT LAUDERDALE
PUBLIC WORKS DEPARTMENT
ENGINEERING & ARCHITECTURE
100 North Andrews Avenue, Fort Lauderdale, Florida 33301

DRAWN BY: CMB
DATE: 09/15/20
DESIGNED BY: DG
SCALE: AS NOTED
CHECKED BY: RV
FIELD BOOK:

REVISIONS

NO.	DATE	BY	CHK'D	DESCRIPTION

PROJECT # 11715
LAS OLAS ISLES UNDERGROUNDING
O/H TO U/G CONVERSION
CORAL WAY
PLAN

SHEET NO. 25
TOTAL: 50
CAD FILE: 11715-BID-MULTI-PLAN
DRAWING FILE NO. 4-136-94

C:\USERS\CMAGIB\ONEDRIVE\DESKTOP\SCMATCH\BID\11715-BID-MULTI-PLAN.DWG

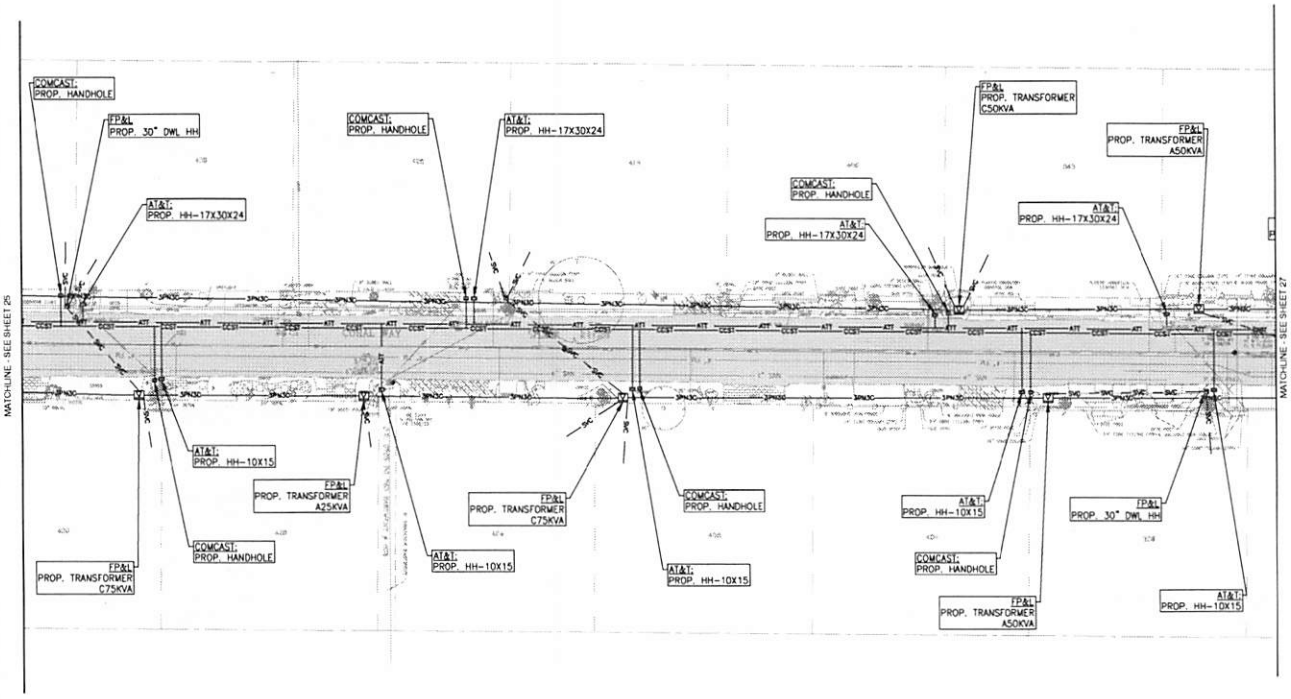

NOTES:

1. THE CONDUIT ALIGNMENT SHOWN IS PRELIMINARY. FINAL ALIGNMENT TO BE BASED ON RESULTS OF SOFT DIG POT HOLES CONTRACTED BY THE CITY OF FORT LAUDERDALE.
2. UTILITIES (FPL, AT&T AND COMCAST) TRANSFORMERS, HANDHOLES AND PEDESTALS HAVE BEEN LOCATED IN ACCORDANCE WITH PRELIMINARY SCHEMATIC DRAWINGS PROVIDED TO THE ENGINEER DURING DESIGN DEVELOPMENT PHASE. FINAL LOCATIONS TO BE REVIEWED, APPROVED, ACCEPTED BY EACH UTILITY COMPANY FOR FINAL CONSTRUCTION DOCUMENT PHASE.
3. PLANS INDICATE THE UNDERGROUNDING CONDUITS AND NECESSARY WORK WITHIN THE STREET R/W ONLY. CONTRACTOR TO REFER TO EACH UTILITIES PLANS FOR ROUTING FROM TRANSFORMERS, HANDHOLES AND PEDESTALS TO THE INDIVIDUAL RESIDENCE SERVICE POINTS.

GRAPHIC SCALE
20 0 10 20 40 80
(IN FEET)
1 inch = 20 ft.

LEGEND PROPOSED:

- FNC — FLORIDA POWER & LIGHT FEEDER NETWORK CABLE AND CONDUIT
- PN/C — FLORIDA POWER & LIGHT PRIMARY CABLE AND CONDUIT
- SVC — FLORIDA POWER & LIGHT SERVICE CABLE AND CONDUIT
- ATT — AT&T CONDUIT
- CCST — COMCAST COMMUNICATIONS CONDUIT

- AT&T PROPOSED HANDHOLE
- COMCAST PROPOSED HANDHOLE
- CITY STREET LIGHT SPLICE BOX
- CITY STREET LIGHT FOUNDATION
- CITY HANDHOLE
- PROPOSED BORE PIT

- FP&L SPLICE BOX
- FP&L FEEDER SPLICE BOX
- FP&L SWITCH CABINET
- FP&L TRANSFORMERS (PROPOSED)
- FP&L TRANSFORMERS (EXISTING)

- EXISTING PAVEMENT
- FP&L FUSE CABINET
- FP&L CAPACITOR BANK
- FP&L SPLICE BOX
- FP&L HANDHOLE

BID SET

CITY OF FORT LAUDERDALE
PUBLIC WORKS DEPARTMENT
ENGINEERING & ARCHITECTURE

NO	DATE	BY	CHK'D	REVISIONS DESCRIPTION

PROJECT # 11715
LAS OLAS ISLES UNDERGROUNDING
O/H TO U/G CONVERSION
CORAL WAY
PLAN

SHEET NO. 26
TOTAL: 50
CAD FILE: 11715-BID-MULTI-PLAN
DRAWING FILE NO. 4-138-04

C:\USERS\CRAIGB\ONEDRIVE\DESKTOP\SCRATCH\REVIT\11715-BID-MULTI-PLAN.DWG

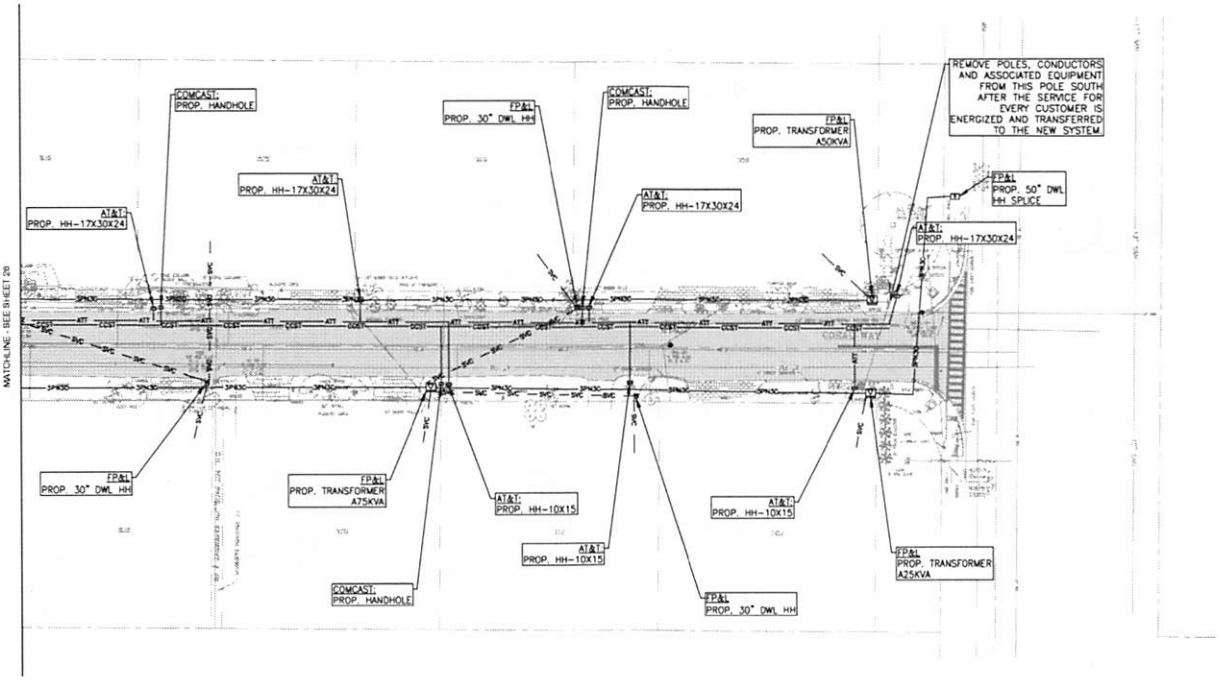

NOTES:

1. THE CONDUIT ALIGNMENT SHOWN IS PRELIMINARY. FINAL ALIGNMENT TO BE BASED ON RESULTS OF SOFT DIG POT HOLES CONTRACTED BY THE CITY OF FORT LAUDERDALE.
2. UTILITIES (FPL, AT&T AND COMCAST) TRANSFORMERS, HANDHOLES AND PEDESTALS HAVE BEEN LOCATED IN ACCORDANCE WITH PRELIMINARY SCHEMATIC DRAWINGS PROVIDED TO THE ENGINEER DURING DESIGN DEVELOPMENT PHASE. FINAL LOCATIONS TO BE REVIEWED, APPROVED/ACCEPTED BY EACH UTILITY COMPANY FOR FINAL CONSTRUCTION DOCUMENT PHASE.
3. PLANS INDICATE THE UNDERGROUNDING CONDUITS AND NECESSARY WORK WITHIN THE STREET R/W ONLY. CONTRACTOR TO REFER TO EACH UTILITIES PLANS FOR ROUTING FROM TRANSFORMERS, HANDHOLES AND PEDESTALS TO THE INDIVIDUAL RESIDENCE SERVICE POINTS.

GRAPHIC SCALE
20 0 10 20 40 80
(IN FEET)
1 inch = 20 ft.

LEGEND PROPOSED:

- FNC — FLORIDA POWER & LIGHT FEEDER NETWORK CABLE AND CONDUIT
- #PN#C — FLORIDA POWER & LIGHT PRIMARY CABLE AND CONDUIT
- SVC — FLORIDA POWER & LIGHT SERVICE CABLE AND CONDUIT
- ATT — AT&T CONDUIT
- CCST — COMCAST COMMUNICATIONS CONDUIT
- AT&T PROPOSED HANDHOLE
- COMCAST PROPOSED HANDHOLE
- CITY STREET LIGHT SPLICE BOX
- CITY STREET LIGHT FOUNDATION
- CITY HANDHOLE
- PROPOSED BORE PIT
- FP&L SPLICE BOX
- FP&L FEEDER SPLICE BOX
- FP&L SWITCH CABINET
- FP&L TRANSFORMERS (PROPOSED)
- FP&L TRANSFORMERS (EXISTING)
- EXISTING PAVEMENT
- FP&L FUSE CABINET
- FP&L CAPACITOR BANK
- FP&L SPLICE BOX
- FP&L HANDHOLE

BID SET

CITY OF FORT LAUDERDALE
PUBLIC WORKS DEPARTMENT
ENGINEERING & ARCHITECTURE
100 North Andrews Avenue, Fort Lauderdale, Florida 33301

DRAWN BY:	DATE:
CMB	09/15/20
CHECKED BY: DG	SCALE: AS NOTED
DESIGN BY: RV	
FIELD BOOK:	

REVISIONS

NO	DATE	BY	CHK'D	DESCRIPTION

PROJECT # 11715
LAS OLAS ISLES UNDERGROUNDING
O/H TO U/G CONVERSION
CORAL WAY
PLAN

SHEET NO. 27
TOTAL: 50
CAD FILE: 11715-BID-MULTI-PLAN
DRAWING FILE NO. 4-136-94

C:\USERS\CRAIGB\ONEDRIVE\DESKTOP\SCRATCH\BID\11715-BID-MULTI-PLAN.DWG

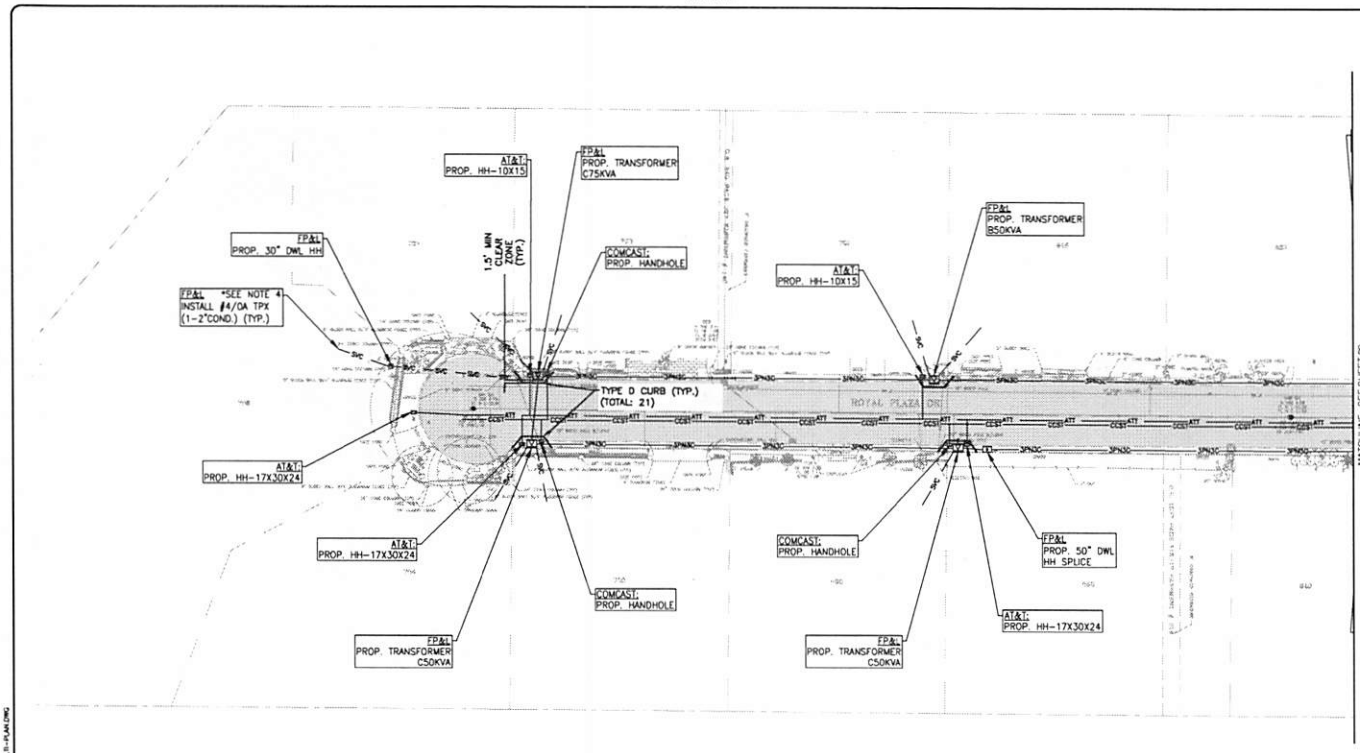

NOTES:

1. THE CONDUIT ALIGNMENT SHOWN IS PRELIMINARY. FINAL ALIGNMENT TO BE BASED ON RESULTS OF SOFT DIG POT HOLES CONTRACTED BY THE CITY OF FORT LAUDERDALE.
2. UTILITIES (FPL, AT&T AND COMCAST) TRANSFORMERS, HANDHOLES AND PEDESTALS HAVE BEEN LOCATED IN ACCORDANCE WITH PRELIMINARY SCHEMATIC DRAWINGS PROVIDED TO THE ENGINEER DURING DESIGN DEVELOPMENT PHASE. FINAL LOCATIONS TO BE REVIEWED, APPROVED/ACCEPTED BY EACH UTILITY COMPANY FOR FINAL CONSTRUCTION DOCUMENT PHASE.
3. PLANS INDICATE THE UNDERGROUNDING CONDUITS AND NECESSARY WORK WITHIN THE STREET R/W ONLY. CONTRACTOR TO REFER TO EACH UTILITIES PLANS FOR ROUTING FROM TRANSFORMERS, HANDHOLES AND PEDESTALS TO THE INDIVIDUAL RESIDENCE SERVICE POINTS.

GRAPHIC SCALE
20 0 10 20 40 80
(IN FEET)
1 inch = 20 ft.

LEGEND PROPOSED:

- FNC — FLORIDA POWER & LIGHT FEEDER NETWORK CABLE AND CONDUIT
- #PN#C — FLORIDA POWER & LIGHT PRIMARY CABLE AND CONDUIT
- SVC — FLORIDA POWER & LIGHT SERVICE CABLE AND CONDUIT
- ATT — AT&T CONDUIT
- CCST — COMCAST COMMUNICATIONS CONDUIT
- AT&T PROPOSED HANDHOLE
- COMCAST PROPOSED HANDHOLE
- CITY STREET LIGHT SPLICE BOX
- CITY STREET LIGHT FOUNDATION
- CITY HANDHOLE
- PROPOSED BORE PIT
- FP&L SPLICE BOX
- FP&L FEEDER SPLICE BOX
- FP&L SWITCH CABINET
- FP&L TRANSFORMERS (PROPOSED)
- FP&L TRANSFORMERS (EXISTING)
- EXISTING PAVEMENT
- FP&L FUSE CABINET
- FP&L CAPACITOR BANK
- FP&L SPLICE BOX
- FP&L HANDHOLE

BID SET

CITY OF FORT LAUDERDALE
PUBLIC WORKS DEPARTMENT
ENGINEERING & ARCHITECTURE
100 North Andrews Avenue, Fort Lauderdale, Florida 33301

REVISIONS			
NO.	DATE	BY	CKD	DESCRIPTION

PROJECT # 11715
LAS OLAS ISLES UNDERGROUNDING
O/H TO U/G CONVERSION
ROYAL PLAZA DRIVE
PLAN

SHEET NO. 28
TOTAL: 50
CAD FILE: 11715-BID-MULTI-PLAN
DRAWING FILE NO. 4-136-94

C:\USERS\CMAGE\ONEDRIVE\DESKTOP\SCRATCH\BID\11715-BID-MULTI-PLAN.DWG

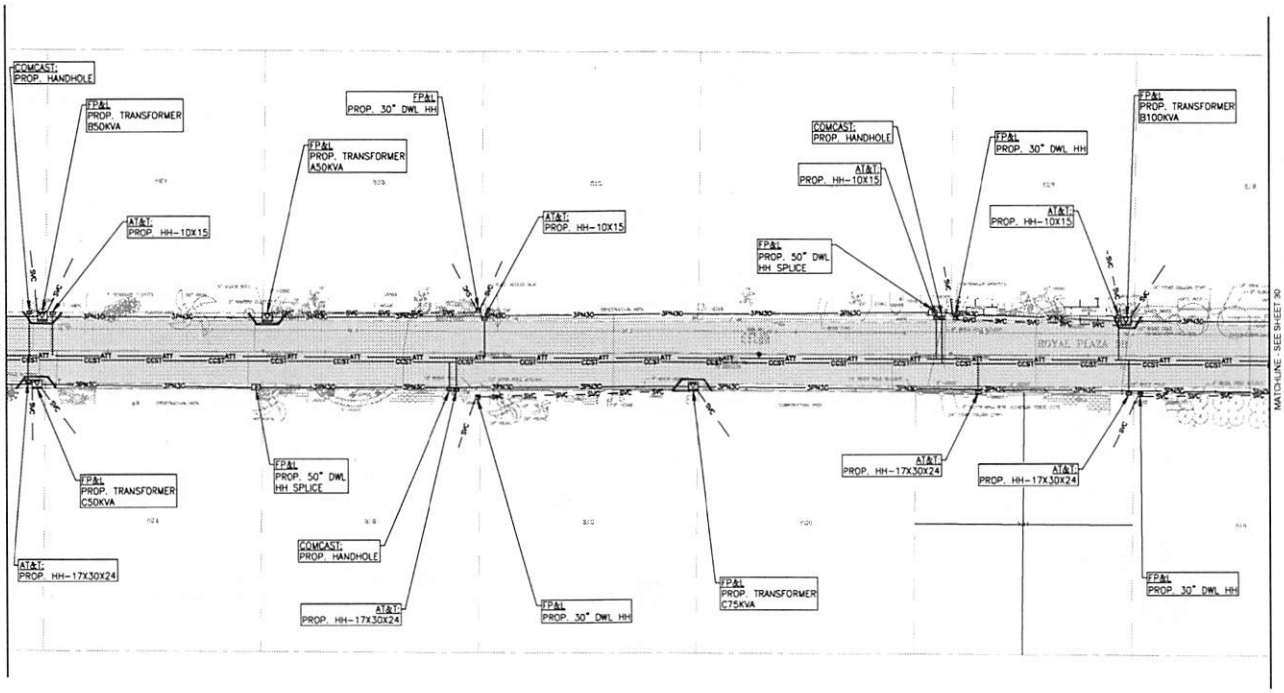

NOTES:

1. THE CONDUIT ALIGNMENT SHOWN IS PRELIMINARY. FINAL ALIGNMENT TO BE BASED ON RESULTS OF SOFT DIG POT HOLES CONTRACTED BY THE CITY OF FORT LAUDERDALE.
2. UTILITIES (FPL, AT&T AND COMCAST) TRANSFORMERS, HANDHOLES AND PEDESTALS HAVE BEEN LOCATED IN ACCORDANCE WITH PRELIMINARY SCHEMATIC DRAWINGS PROVIDED TO THE ENGINEER DURING DESIGN DEVELOPMENT PHASE. FINAL LOCATIONS TO BE REVIEWED, APPROVED/ACCEPTED BY EACH UTILITY COMPANY FOR FINAL CONSTRUCTION DOCUMENT PHASE.
3. PLANS INDICATE THE UNDERGROUNDING CONDUITS AND NECESSARY WORK WITHIN THE STREET R/W ONLY. CONTRACTOR TO REFER TO EACH UTILITIES PLANS FOR ROUTING FROM TRANSFORMERS, HANDHOLES AND PEDESTALS TO THE INDIVIDUAL RESIDENCE SERVICE POINTS.

GRAPHIC SCALE
20 0 10 20 40 80
(IN FEET)
1 inch = 20 ft.

LEGEND PROPOSED:

- FNC — FLORIDA POWER & LIGHT FEEDER NETWORK CABLE AND CONDUIT
- #PN#C — FLORIDA POWER & LIGHT PRIMARY CABLE AND CONDUIT
- SVC — FLORIDA POWER & LIGHT SERVICE CABLE AND CONDUIT
- ATT — AT&T CONDUIT
- CCST — COMCAST COMMUNICATIONS CONDUIT
- AT&T PROPOSED HANDHOLE
- COMCAST PROPOSED HANDHOLE
- CITY STREET LIGHT SPLICE BOX
- CITY STREET LIGHT FOUNDATION
- CITY HANDHOLE
- PROPOSED BORE PIT
- FP&L SPLICE BOX
- FP&L FEEDER SPLICE BOX
- FP&L SWITCH CABINET
- FP&L TRANSFORMERS (PROPOSED)
- FP&L TRANSFORMERS (EXISTING)
- EXISTING PAVEMENT
- FP&L FUSE CABINET
- FP&L CAPACITOR BANK
- FP&L SPLICE BOX
- FP&L HANDHOLE

BID SET

CITY OF FORT LAUDERDALE
PUBLIC WORKS DEPARTMENT
ENGINEERING & ARCHITECTURE
100 North Andrews Avenue, Fort Lauderdale, Florida 33301

DRAWN BY: CAB
DATE: 08/15/20
DESIGNED BY: DG
SCALE: AS NOTED
CHECKED BY: RV
FIELD BOOK:

REVISIONS

NO.	DATE	BY	CHK'D	DESCRIPTION

PROJECT # 11715
LAS OLAS ISLES UNDERGROUNDING
O/H TO U/G CONVERSION
ROYAL PLAZA DRIVE
PLAN

SHEET NO. 29
TOTAL: 50
CAD FILE: 11715-BID-MULTI-PLAN
DRAWING FILE NO. 4-136-94

C:\USERS\CRAIGE\ONEDRIVE\DESKTOP\SCRATCH\BID\11715-BID-MULTI-PLAN.DWG

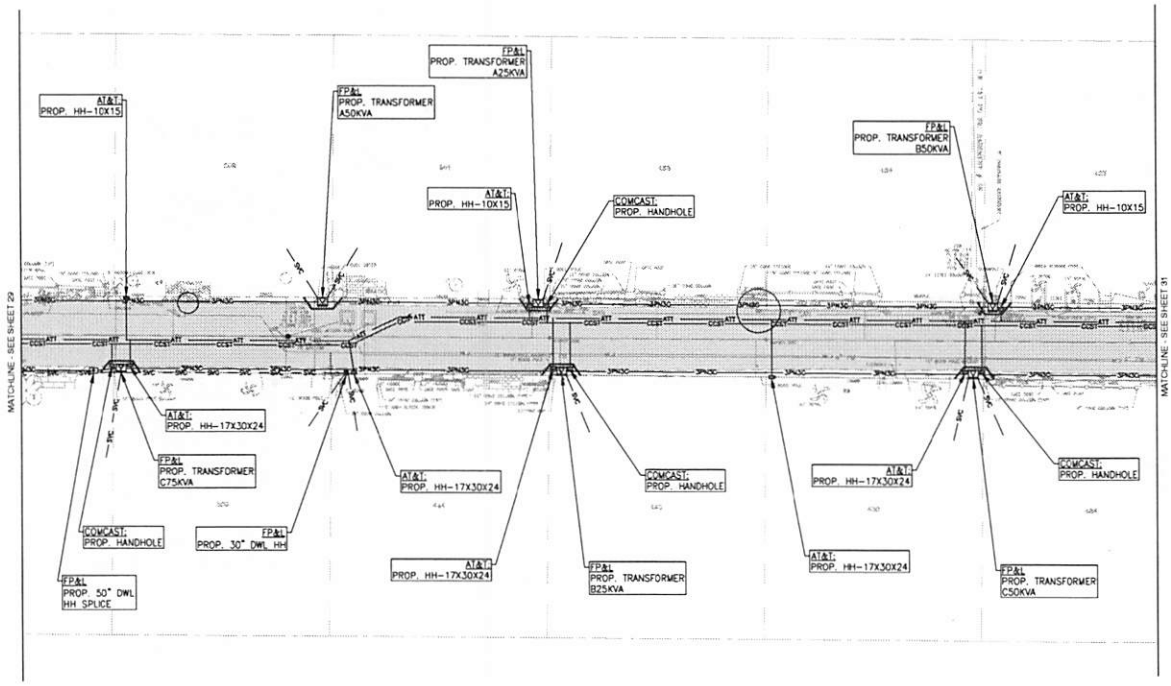

NOTES:

1. THE CONDUIT ALIGNMENT SHOWN IS PRELIMINARY. FINAL ALIGNMENT TO BE BASED ON RESULTS OF SOFT DIG POT HOLES CONTRACTED BY THE CITY OF FORT LAUDERDALE.
2. UTILITIES (FPL, AT&T AND COMCAST) TRANSFORMERS, HANDHOLES AND PEDESTALS HAVE BEEN LOCATED IN ACCORDANCE WITH PRELIMINARY SCHEMATIC DRAWINGS PROVIDED TO THE ENGINEER DURING DESIGN DEVELOPMENT PHASE. FINAL LOCATIONS TO BE REVIEWED, APPROVED/ACCEPTED BY EACH UTILITY COMPANY FOR FINAL CONSTRUCTION DOCUMENT PHASE.
3. PLANS INDICATE THE UNDERGROUNDING CONDUITS AND NECESSARY WORK WITHIN THE STREET R/W ONLY. CONTRACTOR TO REFER TO EACH UTILITIES PLANS FOR ROUTING FROM TRANSFORMERS, HANDHOLES AND PEDESTALS TO THE INDIVIDUAL RESIDENCE SERVICE POINTS.

GRAPHIC SCALE
20 0 10 20 40 80
(IN FEET)
1 inch = 20 ft.

LEGEND PROPOSED:

- FNC — FLORIDA POWER & LIGHT FEEDER NETWORK CABLE AND CONDUIT
- /PN/C — FLORIDA POWER & LIGHT PRIMARY CABLE AND CONDUIT
- SVC — FLORIDA POWER & LIGHT SERVICE CABLE AND CONDUIT
- ATT — AT&T CONDUIT
- CCST — COMCAST COMMUNICATIONS CONDUIT
- AT&T PROPOSED HANDHOLE
- COMCAST PROPOSED HANDHOLE
- CITY STREET LIGHT SPLICE BOX
- CITY STREET LIGHT FOUNDATION
- CITY HANDHOLE
- PROPOSED BORE PIT
- FP&L SPLICE BOX
- FP&L FEEDER SPLICE BOX
- FP&L SWITCH CABINET
- FP&L TRANSFORMERS (PROPOSED)
- FP&L TRANSFORMERS (EXISTING)
- EXISTING PAVEMENT
- FP&L FUSE CABINET
- FP&L CAPACITOR BANK
- FP&L SPLICE BOX
- FP&L HANDHOLE

BID SET

CITY OF FORT LAUDERDALE
PUBLIC WORKS DEPARTMENT
ENGINEERING & ARCHITECTURE
100 North Andrews Avenue, Fort Lauderdale, Florida 33301

REVISIONS			
NO.	DATE	BY	CHK'D	DESCRIPTION

PROJECT # 11715
LAS OLAS ISLES UNDERGROUNDING
O/H TO U/G CONVERSION
ROYAL PLAZA DRIVE
PLAN

SHEET NO. 30
TOTAL: 50
CAD FILE: 11715-BID-MULTI-PLAN
DRAWING FILE NO. 4-136-04

C:\USERS\CAMAGE\ONEDRIVE\DESKTOP\SCRATCH\BID\11715-BID-MULTI-PLAN.DWG

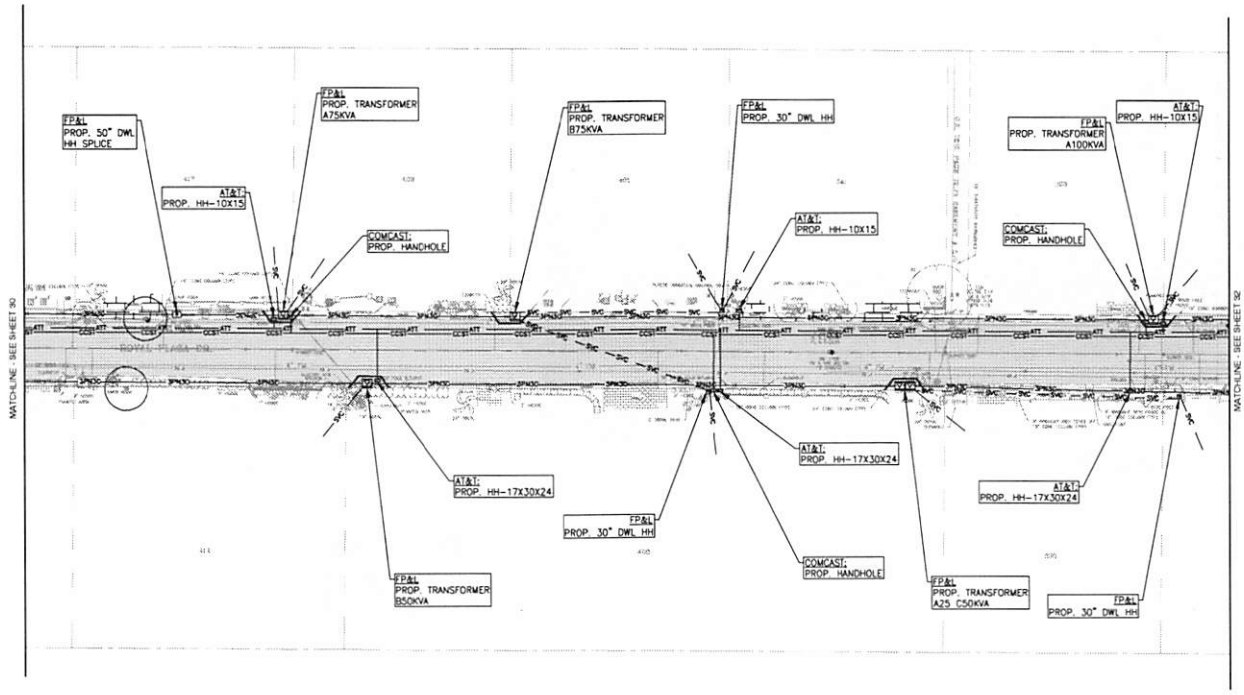

NOTES:

1. THE CONDUIT ALIGNMENT SHOWN IS PRELIMINARY. FINAL ALIGNMENT TO BE BASED ON RESULTS OF SOFT DIG POT HOLES CONTRACTED BY THE CITY OF FORT LAUDERDALE.
2. UTILITIES (FPL, AT&T AND COMCAST) TRANSFORMERS, HANDHOLES AND PEDESTALS HAVE BEEN LOCATED IN ACCORDANCE WITH PRELIMINARY SCHEMATIC DRAWINGS PROVIDED TO THE ENGINEER DURING DESIGN DEVELOPMENT PHASE. FINAL LOCATIONS TO BE REVIEWED, APPROVED/ACCEPTED BY EACH UTILITY COMPANY FOR FINAL CONSTRUCTION DOCUMENT PHASE.
3. PLANS INDICATE THE UNDERGROUNDING CONDUITS AND NECESSARY WORK WITHIN THE STREET R/W ONLY. CONTRACTOR TO REFER TO EACH UTILITIES PLANS FOR ROUTING FROM TRANSFORMERS, HANDHOLES AND PEDESTALS TO THE INDIVIDUAL RESIDENCE SERVICE POINTS.

GRAPHIC SCALE
20 0 10 20 40 80
(IN FEET)
1 inch = 20 ft.

LEGEND PROPOSED:

- FNC — FLORIDA POWER & LIGHT FEEDER NETWORK CABLE AND CONDUIT
- PN/C — FLORIDA POWER & LIGHT PRIMARY CABLE AND CONDUIT
- SVC — FLORIDA POWER & LIGHT SERVICE CABLE AND CONDUIT
- ATT — AT&T CONDUIT
- CCST — COMCAST COMMUNICATIONS CONDUIT
- AT&T PROPOSED HANDHOLE
- COMCAST PROPOSED HANDHOLE
- CITY STREET LIGHT SPLICE BOX
- CITY STREET LIGHT FOUNDATION
- CITY HANDHOLE
- PROPOSED BORE PIT
- FP&L SPLICE BOX
- FP&L FEEDER SPLICE BOX
- FP&L SWITCH CABINET
- FP&L TRANSFORMERS (PROPOSED)
- FP&L TRANSFORMERS (EXISTING)
- EXISTING PAVEMENT
- FP&L FUSE CABINET
- FP&L CAPACITOR BANK
- FP&L SPLICE BOX
- FP&L HANDHOLE

BID SET

CITY OF FORT LAUDERDALE
PUBLIC WORKS DEPARTMENT
ENGINEERING & ARCHITECTURE
100 North Andrews Avenue, Fort Lauderdale, Florida 33301

DRAWN BY: CMB DATE: 08/18/20
CHECKED BY: DC SCALE: AS NOTED
DESIGN BY: AV
FIELD BOOK:

REVISIONS

NO.	DATE	BY	CHK'D	DESCRIPTION

PROJECT # 11715
LAS OLAS ISLES UNDERGROUNDING
O/H TO U/G CONVERSION
ROYAL PLAZA DRIVE
PLAN

SHEET NO. 31
TOTAL: 50
CAD FILE: 11715-BID-MULTI-PLAN
DRAWING FILE NO. 4-136-94

C:\USERS\CRMCGB\ONEDRIVE\DESKTOP\SCRATCH\BID\11715-BID-MULTI-PLAN.DWG

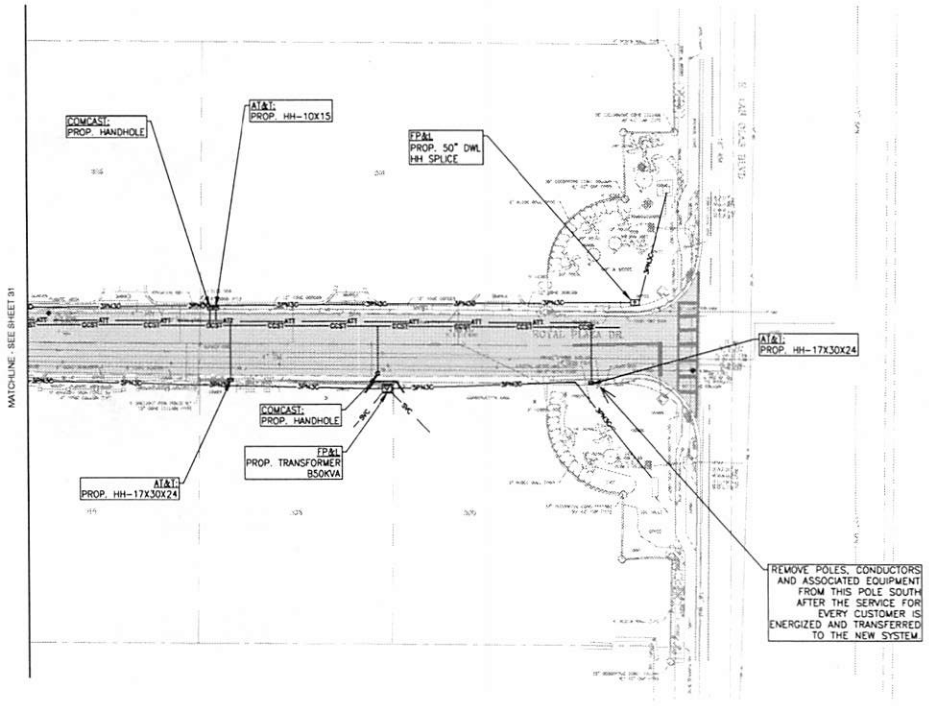

NOTES:

1. THE CONDUIT ALIGNMENT SHOWN IS PRELIMINARY. FINAL ALIGNMENT TO BE BASED ON RESULTS OF SOFT DIG POT HOLES CONTRACTED BY THE CITY OF FORT LAUDERDALE.
2. UTILITIES (FPL, AT&T AND COMCAST) TRANSFORMERS, HANDHOLES AND PEDESTALS HAVE BEEN LOCATED IN ACCORDANCE WITH PRELIMINARY SCHEMATIC DRAWINGS PROVIDED TO THE ENGINEER DURING DESIGN DEVELOPMENT PHASE. FINAL LOCATIONS TO BE REVIEWED, APPROVED/ACCEPTED BY EACH UTILITY COMPANY FOR FINAL CONSTRUCTION DOCUMENT PHASE.
3. PLANS INDICATE THE UNDERGROUNDING CONDUITS AND NECESSARY WORK WITHIN THE STREET R/W ONLY. CONTRACTOR TO REFER TO EACH UTILITIES PLANS FOR ROUTING FROM TRANSFORMERS, HANDHOLES AND PEDESTALS TO THE INDIVIDUAL RESIDENCE SERVICE POINTS.

GRAPHIC SCALE
20 0 10 20 40 80
(IN FEET)
1 inch = 20 ft.

LEGEND PROPOSED:

- FNC — FLORIDA POWER & LIGHT FEEDER NETWORK CABLE AND CONDUIT
- #PN#C — FLORIDA POWER & LIGHT PRIMARY CABLE AND CONDUIT
- SVC — FLORIDA POWER & LIGHT SERVICE CABLE AND CONDUIT
- ATT — AT&T CONDUIT
- CCST — COMCAST COMMUNICATIONS CONDUIT
- AT&T PROPOSED HANDHOLE
- COMCAST PROPOSED HANDHOLE
- CITY STREET LIGHT SPLICE BOX
- CITY STREET LIGHT FOUNDATION
- CITY HANDHOLE
- PROPOSED BORE PIT
- FP&L SPLICE BOX
- FP&L FEEDER SPLICE BOX
- FP&L SWITCH CABINET
- FP&L TRANSFORMERS (PROPOSED)
- FP&L TRANSFORMERS (EXISTING)
- EXISTING PAVEMENT
- FP&L FUSE CABINET
- FP&L CAPACITOR BANK
- FP&L SPLICE BOX
- FP&L HANDHOLE

BID SET

CITY OF FORT LAUDERDALE
PUBLIC WORKS DEPARTMENT
ENGINEERING & ARCHITECTURE
100 North Andrews Avenue, Fort Lauderdale, Florida 33301

REVISIONS			
NO.	DATE	BY	CHK'D	DESCRIPTION

PROJECT # 11715
LAS OLAS ISLES UNDERGROUNDING
O/H TO U/G CONVERSION
ROYAL PLAZA DRIVE
PLAN

SHEET NO. 32
TOTAL: 50
CAD FILE: 11715-BID-MULTI-PLAN
DRAWING FILE NO. 4-136-94

C:\USERS\CRAGS\ONEDRIVE\DESKTOP\SCRATCH\BID\11715-BID-MULTI-PLAN.DWG

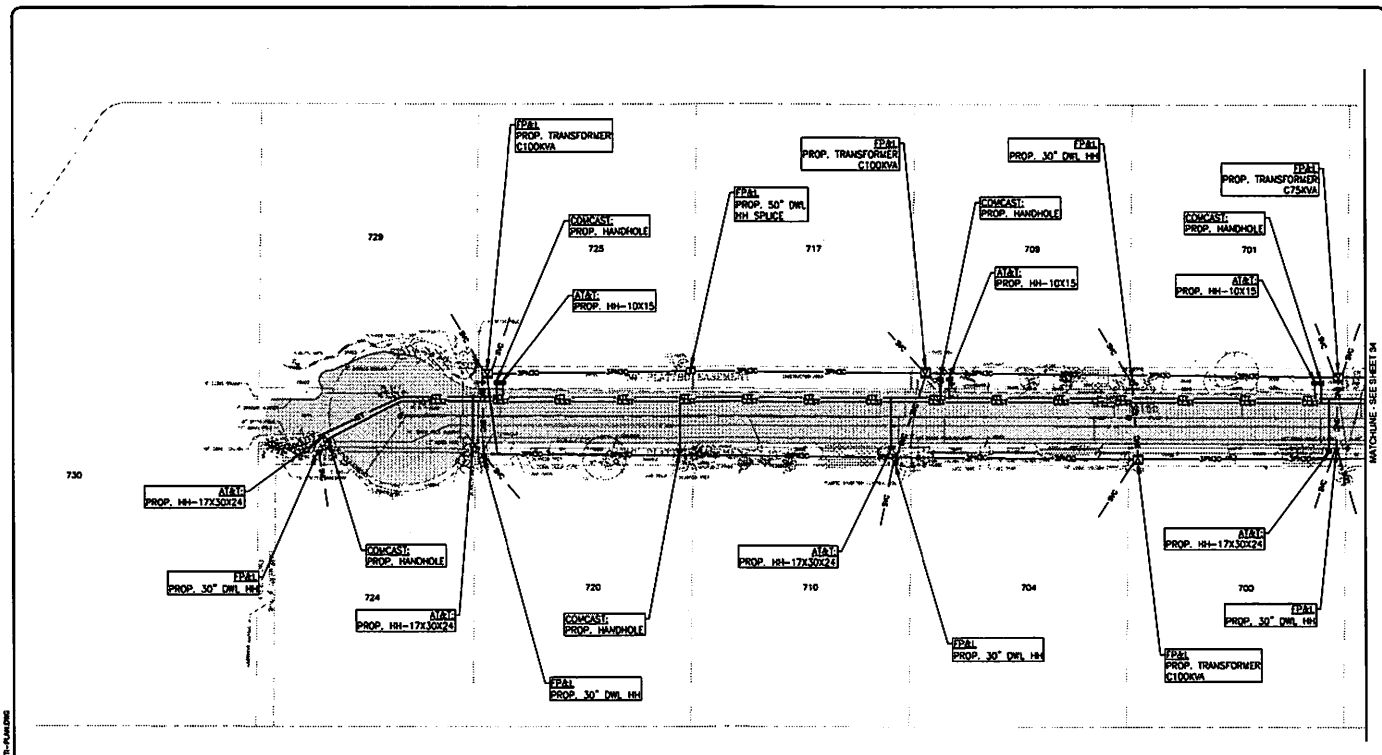

NOTES:

1. THE CONDUIT ALIGNMENT SHOWN IS PRELIMINARY. FINAL ALIGNMENT TO BE BASED ON RESULTS OF SOFT DIG POT HOLES CONTRACTED BY THE CITY OF FORT LAUDERDALE.
2. UTILITIES (FPL, AT&T AND COMCAST) TRANSFORMERS, HANDHOLES AND PEDESTALS HAVE BEEN LOCATED IN ACCORDANCE WITH PRELIMINARY SCHEMATIC DRAWINGS PROVIDED TO THE ENGINEER DURING DESIGN DEVELOPMENT PHASE. FINAL LOCATIONS TO BE REVIEWED, APPROVED/ACCEPTED BY EACH UTILITY COMPANY FOR FINAL CONSTRUCTION DOCUMENT PHASE.
3. PLANS INDICATE THE UNDERGROUNDING CONDUITS AND NECESSARY WORK WITHIN THE STREET R/W ONLY. CONTRACTOR TO REFER TO EACH UTILITIES PLANS FOR ROUTING FROM TRANSFORMERS, HANDHOLES AND PEDESTALS TO THE INDIVIDUAL RESIDENCE SERVICE POINTS.

GRAPHIC SCALE
(IN FEET)
1 inch = 20 ft.

LEGEND PROPOSED:

- FNC — FLORIDA POWER & LIGHT FEEDER NETWORK CABLE AND CONDUIT
- FPN/C — FLORIDA POWER & LIGHT PRIMARY CABLE AND CONDUIT
- SVC — FLORIDA POWER & LIGHT SERVICE CABLE AND CONDUIT
- ATT — AT&T CONDUIT
- CCST — COMCAST COMMUNICATIONS CONDUIT

- AT&T PROPOSED HANDHOLE
- COMCAST PROPOSED HANDHOLE
- CITY STREET LIGHT SPLICE BOX
- CITY STREET LIGHT FOUNDATION
- CITY HANDHOLE
- PROPOSED BORE PIT

- FP&L SPLICE BOX
- FP&L FEEDER SPLICE BOX
- FP&L SWITCH CABINET
- FP&L TRANSFORMERS (PROPOSED)
- FP&L TRANSFORMERS (EXISTING)

- EXISTING PAVEMENT
- FP&L FUSE CABINET
- FP&L CAPACITOR BANK
- FP&L SPLICE BOX
- FP&L HANDHOLE

BID SET

CITY OF FORT LAUDERDALE
PUBLIC WORKS DEPARTMENT
ENGINEERING & ARCHITECTURE
(Address)

PROJECT # 11715
LAS OLAS ISLES UNDERGROUNDING
O/H TO U/G CONVERSION
ISLES OF PALM DRIVE
PLAN

SHEET NO. 33
TOTAL SHEETS 50
CAD FILE: 11715-BID-MAIN-PLAN
BASELINE FILE NO. 4-136-84

C:\USERS\DWGS\PLANDRIVE\DESKTOP\JOBMAIN\BID\11715-BID-MAIN-PLAN.DWG

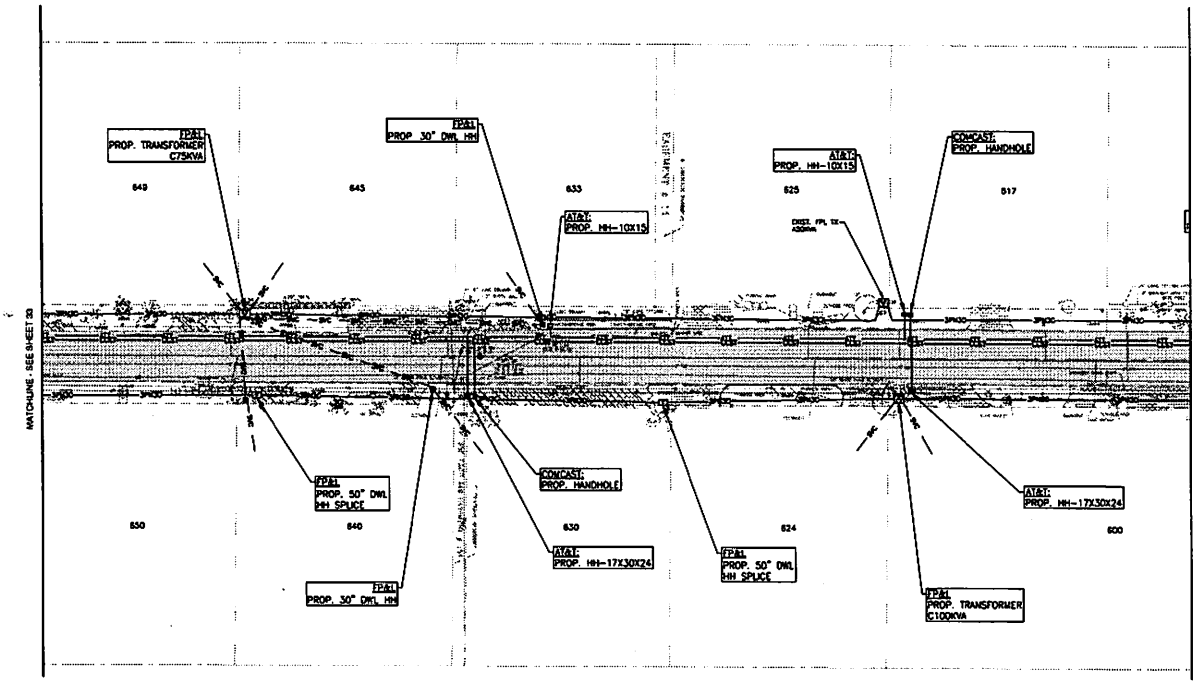

NOTES:

1. THE CONDUIT ALIGNMENT SHOWN IS PRELIMINARY. FINAL ALIGNMENT TO BE BASED ON RESULTS OF SOFT DIG POT HOLES CONTRACTED BY THE CITY OF FORT LAUDERDALE.
2. UTILITIES (FPL, AT&T AND COMCAST) TRANSFORMERS, HANDHOLES AND PEDESTALS HAVE BEEN LOCATED IN ACCORDANCE WITH PRELIMINARY SCHEMATIC DRAWINGS PROVIDED TO THE ENGINEER DURING DESIGN DEVELOPMENT PHASE. FINAL LOCATIONS TO BE REVIEWED, APPROVED/ACCEPTED BY EACH UTILITY COMPANY FOR FINAL CONSTRUCTION DOCUMENT PHASE.
3. PLANS INDICATE THE UNDERGROUNDING CONDUITS AND NECESSARY WORK WITHIN THE STREET R/W ONLY. CONTRACTOR TO REFER TO EACH UTILITIES PLANS FOR ROUTING FROM TRANSFORMERS, HANDHOLES AND PEDESTALS TO THE INDIVIDUAL RESIDENCE SERVICE POINTS.

GRAPHIC SCALE
(IN FEET)
1 inch = 20 ft.

LEGEND PROPOSED:

- FNC — FLORIDA POWER & LIGHT FEEDER NETWORK CABLE AND CONDUIT
- #PN#C — FLORIDA POWER & LIGHT PRIMARY CABLE AND CONDUIT
- SVC — FLORIDA POWER & LIGHT SERVICE CABLE AND CONDUIT
- ATT — AT&T CONDUIT
- CCST — COMCAST COMMUNICATIONS CONDUIT
- AT&T PROPOSED HANDHOLE
- COMCAST PROPOSED HANDHOLE
- CITY STREET LIGHT SPLICE BOX
- CITY STREET LIGHT FOUNDATION
- CITY HANDHOLE
- PROPOSED BORE PIT
- FP&L SPLICE BOX
- FP&L FEEDER SPLICE BOX
- FP&L SWITCH CABINET
- FP&L TRANSFORMERS (PROPOSED)
- FP&L TRANSFORMERS (EXISTING)
- EXISTING PAVEMENT
- FP&L FUSE CABINET
- FP&L CAPACITOR BANK
- FP&L SPLICE BOX
- FP&L HANDHOLE

BID SET

CITY OF FORT LAUDERDALE
PUBLIC WORKS DEPARTMENT
ENGINEERING & ARCHITECTURE
100 North Andrews Avenue, Fort Lauderdale, Florida 33301

REVISIONS

NO.	DATE	BY	CHK'D	DESCRIPTION

PROJECT # 11715
LAS OLAS ISLES UNDERGROUNDING
O/H TO U/G CONVERSION
ISLES OF PALM DRIVE
PLAN

SHEET NO. 34
TOTAL: 50
CAD FILE: 11715-BID-MULTI-PLAN
DRAWING FILE NO. 4-136-04

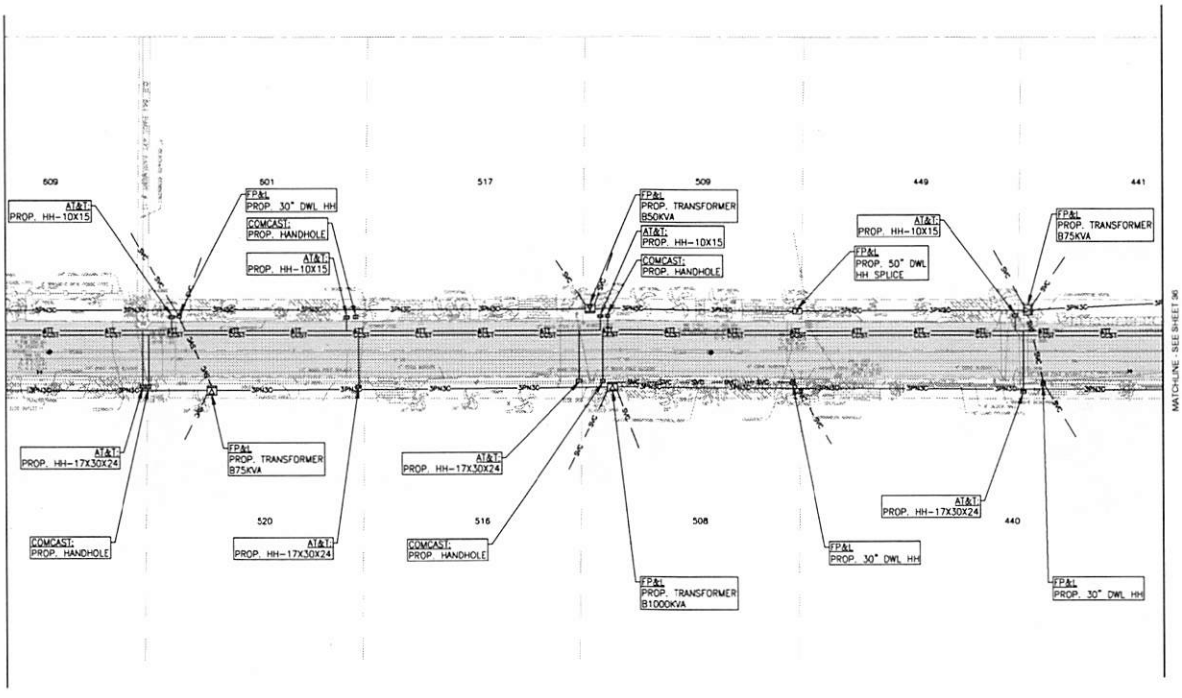

NOTES:

1. THE CONDUIT ALIGNMENT SHOWN IS PRELIMINARY. FINAL ALIGNMENT TO BE BASED ON RESULTS OF SOFT DIG POT HOLES CONTRACTED BY THE CITY OF FORT LAUDERDALE.
2. UTILITIES (FPL, AT&T AND COMCAST) TRANSFORMERS, HANDHOLES AND PEDESTALS HAVE BEEN LOCATED IN ACCORDANCE WITH PRELIMINARY SCHEMATIC DRAWINGS PROVIDED TO THE ENGINEER DURING DESIGN DEVELOPMENT PHASE. FINAL LOCATIONS TO BE REVIEWED, APPROVED/ACCEPTED BY EACH UTILITY COMPANY FOR FINAL CONSTRUCTION DOCUMENT PHASE.
3. PLANS INDICATE THE UNDERGROUNDING CONDUITS AND NECESSARY WORK WITHIN THE STREET R/W ONLY. CONTRACTOR TO REFER TO EACH UTILITIES PLANS FOR ROUTING FROM TRANSFORMERS, HANDHOLES AND PEDESTALS TO THE INDIVIDUAL RESIDENCE SERVICE POINTS.

GRAPHIC SCALE
20 0 10 20 40 80
(IN FEET)
1 inch = 20 ft.

LEGEND PROPOSED:

- FNC — FLORIDA POWER & LIGHT FEEDER NETWORK CABLE AND CONDUIT
- #PN#C — FLORIDA POWER & LIGHT PRIMARY CABLE AND CONDUIT
- SVC — FLORIDA POWER & LIGHT SERVICE CABLE AND CONDUIT
- ATT — AT&T CONDUIT
- CCST — COMCAST COMMUNICATIONS CONDUIT
- AT&T PROPOSED HANDHOLE
- COMCAST PROPOSED HANDHOLE
- CITY STREET LIGHT SPLICE BOX
- CITY STREET LIGHT FOUNDATION
- CITY HANDHOLE
- PROPOSED BORE PIT
- FP&L SPLICE BOX
- FP&L FEEDER SPLICE BOX
- FP&L SWITCH CABINET
- FP&L TRANSFORMERS (PROPOSED)
- FP&L TRANSFORMERS (EXISTING)
- EXISTING PAVEMENT
- FP&L FUSE CABINET
- FP&L CAPACITOR BANK
- FP&L SPLICE BOX
- FP&L HANDHOLE

BID SET

CITY OF FORT LAUDERDALE
PUBLIC WORKS DEPARTMENT
ENGINEERING & ARCHITECTURE
100 North Andrews Avenue, Fort Lauderdale, Florida 33301

DRAWN BY: CMB	DATE: 05/15/20
CHECKED BY: DC	SCALE: AS NOTED
DESIGNED BY: RV	FIELD BOOK:

REVISIONS

NO.	DATE	BY	CHK'D	DESCRIPTION

PROJECT # 11715
LAS OLAS ISLES UNDERGROUNDING
O/H TO U/G CONVERSION
ISLES OF PALM DRIVE
PLAN

SHEET NO. 35
TOTAL: 50
CAD FILE: 11715-BID-MULTI-PLAN
DRAWING FILE NO. 4-135-04

C:\USERS\CRAIGB\ONEDRIVE\DESKTOP\SCRATCH\BID\11715-BID-MULTI-PLAN.DWG

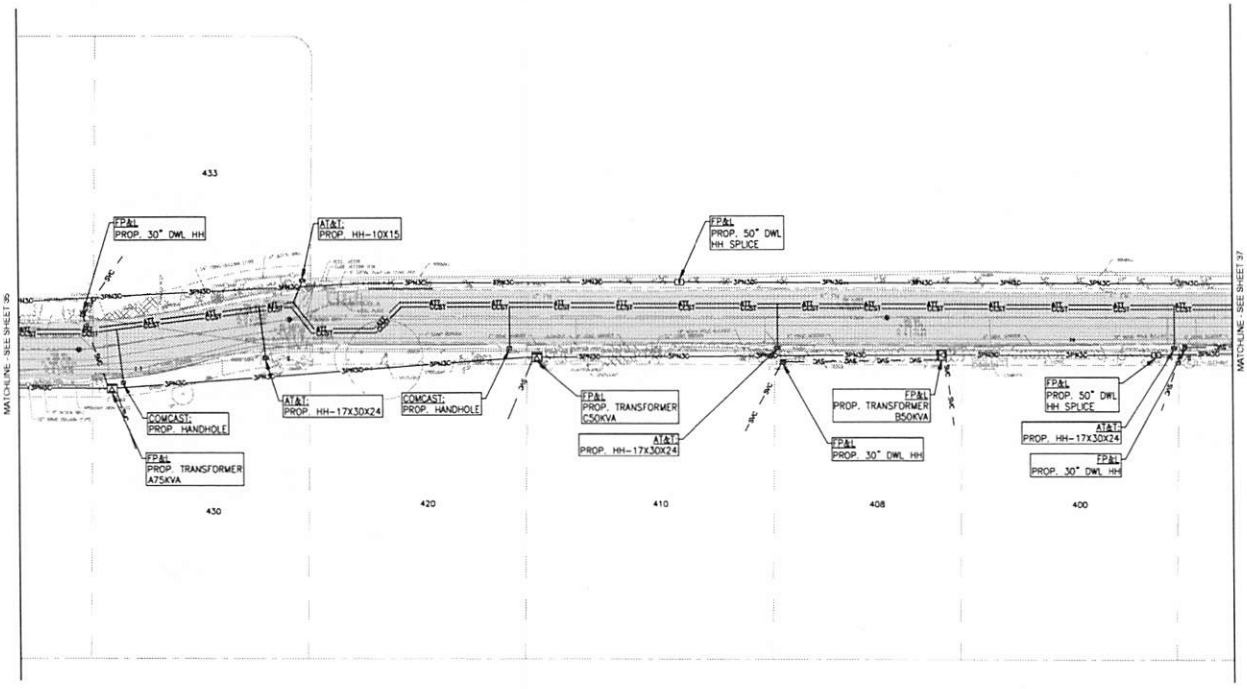

NOTES:

1. THE CONDUIT ALIGNMENT SHOWN IS PRELIMINARY. FINAL ALIGNMENT TO BE BASED ON RESULTS OF SOFT DIG POT HOLES CONTRACTED BY THE CITY OF FORT LAUDERDALE.
2. UTILITIES (FPL, AT&T AND COMCAST) TRANSFORMERS, HANDHOLES AND PEDESTALS HAVE BEEN LOCATED IN ACCORDANCE WITH PRELIMINARY SCHEMATIC DRAWINGS PROVIDED TO THE ENGINEER DURING DESIGN DEVELOPMENT PHASE. FINAL LOCATIONS TO BE REVIEWED, APPROVED/ACCEPTED BY EACH UTILITY COMPANY FOR FINAL CONSTRUCTION DOCUMENT PHASE.
3. PLANS INDICATE THE UNDERGROUNDING CONDUITS AND NECESSARY WORK WITHIN THE STREET R/W ONLY. CONTRACTOR TO REFER TO EACH UTILITIES PLANS FOR ROUTING FROM TRANSFORMERS, HANDHOLES AND PEDESTALS TO THE INDIVIDUAL RESIDENCE SERVICE POINTS.

GRAPHIC SCALE
20 0 10 20 40 80
(IN FEET)
1 inch = 20 ft.

LEGEND PROPOSED:

- FNC — FLORIDA POWER & LIGHT FEEDER NETWORK CABLE AND CONDUIT
- PN/C — FLORIDA POWER & LIGHT PRIMARY CABLE AND CONDUIT
- SVC — FLORIDA POWER & LIGHT SERVICE CABLE AND CONDUIT
- ATT — AT&T CONDUIT
- CCST — COMCAST COMMUNICATIONS CONDUIT
- AT&T PROPOSED HANDHOLE
- COMCAST PROPOSED HANDHOLE
- CITY STREET LIGHT SPLICE BOX
- CITY STREET LIGHT FOUNDATION
- CITY HANDHOLE
- PROPOSED BORE PIT
- FP&L SPLICE BOX
- FP&L FEEDER SPLICE BOX
- FP&L SWITCH CABINET
- FP&L TRANSFORMERS (PROPOSED)
- FP&L TRANSFORMERS (EXISTING)
- EXISTING PAVEMENT
- FP&L FUSE CABINET
- FP&L CAPACITOR BANK
- FP&L SPLICE BOX
- FP&L HANDHOLE

BID SET

CITY OF FORT LAUDERDALE
PUBLIC WORKS DEPARTMENT
ENGINEERING & ARCHITECTURE
100 North Andrews Avenue, Fort Lauderdale, Florida 33301

REVISIONS			
NO.	DATE	BY	CHK'D	DESCRIPTION

PROJECT # 11715
LAS OLAS ISLES UNDERGROUNDING
O/H TO U/G CONVERSION
ISLES OF PALM DRIVE
PLAN

SHEET NO. 36
TOTAL: 50
CAD FILE: 11715-BID-MULTI-PLAN
DRAWING FILE NO. 4-136-94

C:\USERS\CRMAGB\DIRECTORS\DESKTOP\SCRATCH\BID\11715-BID-MULTI-PLAN.DWG

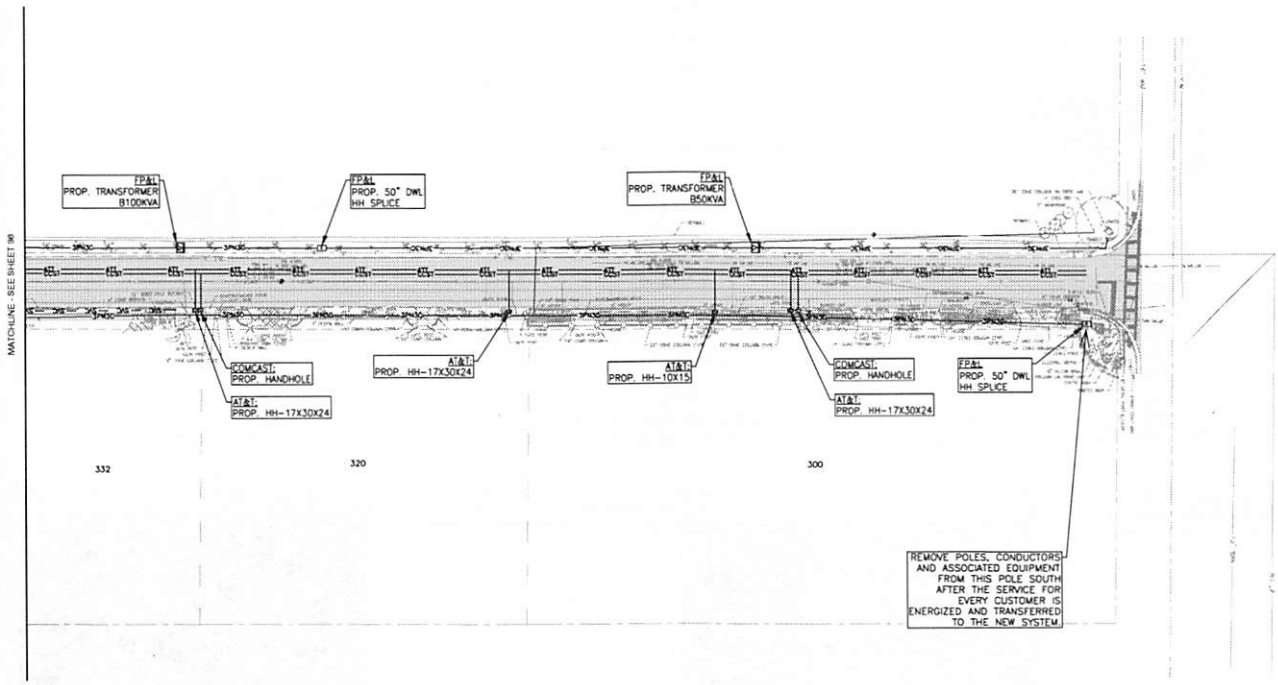

NOTES:

1. THE CONDUIT ALIGNMENT SHOWN IS PRELIMINARY. FINAL ALIGNMENT TO BE BASED ON RESULTS OF SOFT DIG POT HOLES CONTRACTED BY THE CITY OF FORT LAUDERDALE.
2. UTILITIES (FPL, AT&T AND COMCAST) TRANSFORMERS, HANDHOLES AND PEDESTALS HAVE BEEN LOCATED IN ACCORDANCE WITH PRELIMINARY SCHEMATIC DRAWINGS PROVIDED TO THE ENGINEER DURING DESIGN DEVELOPMENT PHASE. FINAL LOCATIONS TO BE REVIEWED, APPROVED/ACCEPTED BY EACH UTILITY COMPANY FOR FINAL CONSTRUCTION DOCUMENT PHASE.
3. PLANS INDICATE THE UNDERGROUNDING CONDUITS AND NECESSARY WORK WITHIN THE STREET R/W ONLY. CONTRACTOR TO REFER TO EACH UTILITIES PLANS FOR ROUTING FROM TRANSFORMERS, HANDHOLES AND PEDESTALS TO THE INDIVIDUAL RESIDENCE SERVICE POINTS.

GRAPHIC SCALE
20 0 10 20 40 80
(IN FEET)
1 inch = 20 ft.

LEGEND PROPOSED:

- FNC — FLORIDA POWER & LIGHT FEEDER NETWORK CABLE AND CONDUIT
- #PN#C — FLORIDA POWER & LIGHT PRIMARY CABLE AND CONDUIT
- SVC — FLORIDA POWER & LIGHT SERVICE CABLE AND CONDUIT
- ATT — AT&T CONDUIT
- CCST — COMCAST COMMUNICATIONS CONDUIT
- AT&T PROPOSED HANDHOLE
- COMCAST PROPOSED HANDHOLE
- CITY STREET LIGHT SPLICE BOX
- CITY STREET LIGHT FOUNDATION
- CITY HANDHOLE
- PROPOSED BORE PIT
- FP&L SPLICE BOX
- FP&L FEEDER SPLICE BOX
- FP&L SWITCH CABINET
- FP&L TRANSFORMERS (PROPOSED)
- FP&L TRANSFORMERS (EXISTING)
- EXISTING PAVEMENT
- FP&L FUSE CABINET
- FP&L CAPACITOR BANK
- FP&L SPLICE BOX
- FP&L HANDHOLE

BID SET

CITY OF FORT LAUDERDALE
PUBLIC WORKS DEPARTMENT
ENGINEERING & ARCHITECTURE
100 North Andrews Avenue, Fort Lauderdale, Florida 33301

DRAWN BY: CMB
DATE: 09/15/20
CHECKED BY: CC
SCALE: AS NOTED
CHECKED BY: RV
FIELD BOOK:

REVISIONS

NO.	DATE	BY	CHK'D	DESCRIPTION

PROJECT # 11715
LAS OLAS ISLES UNDERGROUNDING
O/H TO U/G CONVERSION
ISLES OF PALM DRIVE
PLAN

SHEET NO. 37
TOTAL: 50
CAD FILE: 11715-BID-MULTI-PLAN
DRAWING FILE NO. 4-136-94

C:\USERS\CRANGE\ONEDRIVE\DESKTOP\SCRATCH\BID\11715-BID-MULTI-PLAN.DWG

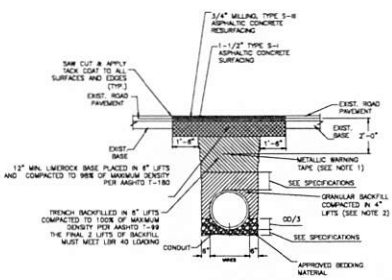

RIGHT OF WAY
TYPICAL TRENCH, MILLING, AND OVERLAY

NOTES:

1. 2" WIDE METALLIC WARNING TAPES SHALL BE INSTALLED BETWEEN 6" AND 12" BELOW FINISH GRADE ABOVE CONDUITS.
2. UNLESS OTHERWISE SPECIFIED SELECTED MATERIAL SHALL BE FREE OF STONES LARGER THAN 3/8" DIA.
3. REPLACE ALL LANE MARKINGS, REFLECTIVE MARKERS AND DAMAGED TRAFFIC SIGNS.

STAGE I
TYPICAL ROAD SECTION, TYPICAL TRENCH AND TRENCH RESTORATION
N.T.S.

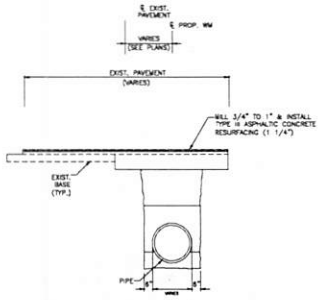

NOTES:

1. REPLACE ALL LANE MARKINGS, REFLECTIVE MARKERS AND DAMAGED TRAFFIC SIGNS.

STAGE II
MILLING AND RESURFACING DETAIL (FULL PAVEMENT WIDTH)
N.T.S.

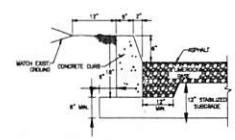

TYPE D CURB
N.T.S.

CITY OF FORT LAUDERDALE
OFFICE OF THE CITY ENGINEER

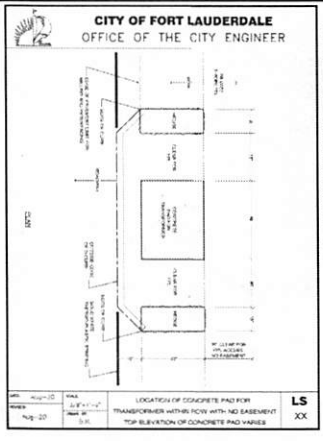



TRANSFORMER WITHIN ROW WITH NO EASEMENT
N.T.S.

CITY OF FORT LAUDERDALE
OFFICE OF THE CITY ENGINEER

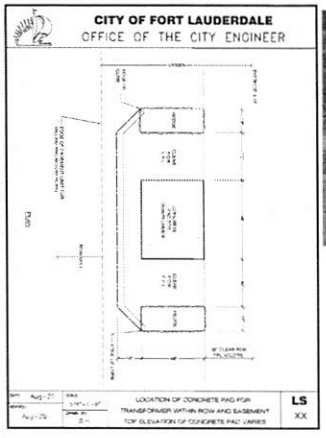

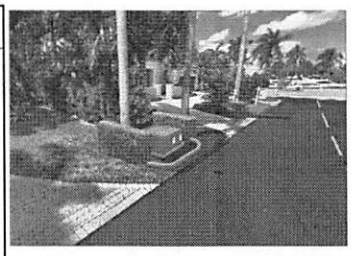

TRANSFORMER WITHIN ROW WITH EASEMENT
N.T.S.

BID SET

CITY OF FORT LAUDERDALE
PUBLIC WORKS DEPARTMENT
ENGINEERING & ARCHITECTURE
100 North Andrews Avenue, Fort Lauderdale, Florida 33301

DRAWN BY:	DATE:
CHS	09/15/20
CHECKED BY:	SCALE:
DG	AS NOTED
CHECKED BY:	
RV	
FIELD BOOK:	

REVISIONS

NO.	DATE	BY	CHK'D	DESCRIPTION

PROJECT # 11715
LAS OLAS ISLES UNDERGROUNDING
O/H TO U/G CONVERSION
CONSTRUCTION DETAILS

SHEET NO. 38
TOTAL: 50
CAD FILE: 11715-BID-DETAILS
DRAWING FILE NO. 4-136-04

C:\USERS\CRAIGB\ONEDRIVE\DESKTOP\SCRATCH\BID\11715-BID-DETAILS.DWG

THIS SHEET LEFT BLANK INTENTIONALLY

BID SET

CITY OF FORT LAUDERDALE
PUBLIC WORKS DEPARTMENT
ENGINEERING & ARCHITECTURE

PROJECT # 11715
LAS OLAS ISLES UNDERGROUNDING
O/H TO U/G CONVERSION
FPL SUPPLEMENTARY INFORMATION

39

PID: ATT.100035465
BOX SPLICE POLYMER
17" X 30" X 24" 15K
OSPCM: HHOLE17X30X24

- HEAVY DUTY 20K BELOW GRADE SPLICE BOX WITH SIDE WALL RACKING COMES WITH
- BOLT DOWN COVER LOGO & EMS CAST INTO GREY 1-PC COVER
- WEIGHT 142 LBS

Can house a 450A closure or a 450B, 400A, B, and C closures

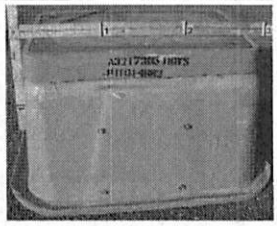

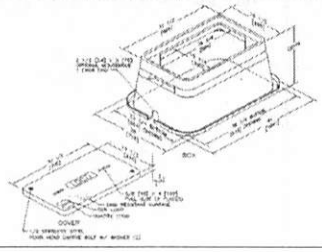

PID: ATT.100006143
HDPE STRUCTURAL FOAM COVER/HDPE MOLDED BOX Channell's GLB Assembly
OSPCM: HANDHOLE10X15

FEATURES:
- 10 X 15 X 12 inches (LID)
- Black - HDPE Body – Green Cover Structural Foam Product
- Load rated to ASTM C857 A-0.3 (300 lbs. per square foot)
- 1 L-Bolt 5 turn lock
- 1 EMS Marker
- High Density Polyethylene material (HDPE)
- Non skid surface

CHANNELL PART #:
- GLB1419170001311
- **WEIGHT & SHIPPING:**
- Cover Weight: 1.65 lbs.
- Box Weight: 4 lbs
- Assembly Weight: 5.65 lbs
- Loaded Pallet Weight: 367 lbs
- Per Pallet #: 60
- Pallet Dimensions: 34"L x 49" W x 47"H

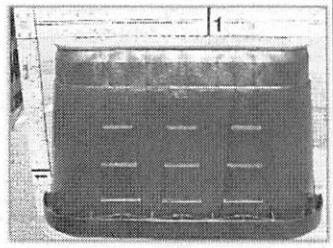

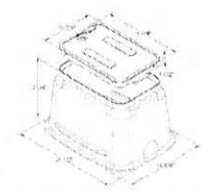

PLEASE REFER TO TECH SPECIFICATIONS IN THE BID DOCUMENT

BID SET

CITY OF FORT LAUDERDALE
PUBLIC WORKS DEPARTMENT
ENGINEERING & ARCHITECTURE
100 North Andrews Avenue, Fort Lauderdale, Florida 33301

REVISIONS			
NO.	DATE	BY	CHK'D	DESCRIPTION

PROJECT # 11715
LAS OLAS ISLES UNDERGROUNDING
O/H TO U/G CONVERSION
AT&T SUPPLEMENTARY INFORMATION

SHEET NO. 40
TOTAL: 50
CAD FILE: 11715-BID-DETAILS
DRAWING FILE NO. 4-136-04

C:\USERS\CHAGE\ONEDRIVE\DESKTOP\SCRATCH\BID\11715-BID-DETAILS.DWG

PCA304836-00012 POLYMER CONCRETE ASSEMBLY

newbasis

Polymer Concrete Assembly, Straight Sides, No Floor, WUC 3.6-"CDK," 3/8" Hex Bolts, 1 Piece Cover, Standard Nameplate (Specify at time of order) Installed

30" x 48" x 36"

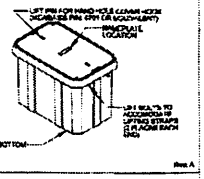

Rev. A

AVAILABLE OPTIONS

- Handle
- Hardware
- Set Opts
- Plate
- Irrigation Control Valve
- Shielded
- Lock
- CATV
- Traffic Rated
- Communications

S - indicates a selected option

NAMEPLATES

One standard nameplate included with each assembly. Inquire at the factory or already installed in the field. Custom nameplates are available. Consult customer service.

Standard Nameplates

- Electric
- Telephone
- Fiber Optic
- Water
- Irrigation Control Valve
- Shielded
- Lock
- CATV
- Traffic Rated
- Communications

MATERIAL PROPERTIES AND ATTRIBUTES

Compressive Strength
Polymer Concrete - 20 MPa
Per ASTM C109

Flexural Strength
Polymer Concrete - 20 MPa (Flex Modulus)
Per ASTM D790

Coefficient of Friction (Dry)
0.685
Per ASTM C1028

Polymer Concrete
- Aesthetically pleasing, Very high strength to weight ratio
- Non-conductive
- Non-combustible
- UV Resistant
- High impact resistant
- Resistant to chemicals and moisture

Materials tested in accordance with ASTM and ASTM D-4 m.

WEIGHTS AND SHIPPING

OVERALL HEIGHT: 36.5 in.

SCS WEIGHT: 650 lbs.

APPROXIMATE WEIGHT: 700 lbs.

LOADED PALLET WEIGHT: 1,400 lbs.

Standard shipping includes non-palletized (LTL/Ltl) delivery to the lower 48 states. Pallet jacks are required for this type of shipping method at the location of use.

PACKAGING

Wood Banding, Edge Protectors

PALLET QUANTITY: 2

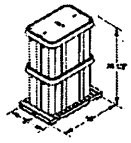

PCA304836-00012

POLYMER CONCRETE ASSEMBLY

30" x 48" x 36"
Pull ahead installations not allowed

Polymer Concrete Assembly, Straight Sides, No Floor, WUC 3.6-"CDK," 3/8" Hex Bolts, 1 Piece Cover, Standard Nameplate (Specify at time of order) Installed

LOAD RATINGS

Incidental Traffic - Parking Lot, Sidewalk
Conforms to:
- WUC 3.6
- ASTM C 857
- AASHTO T 7

FEATURES:

- UESMARUS Approved
- Drop-in nameplate
- Chipped chamfered
- SAM resistant cover
- Stainless steel bolts
- Captive floating nut hex
- Integral drain holes

Additional product information continued on the reverse

newbasis
Composites for Infrastructure

7235 Kimura Avenue
Fontana, California 92337

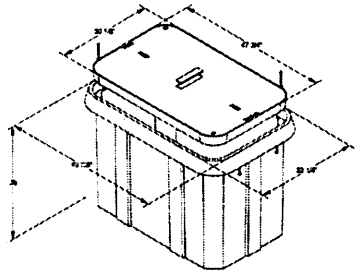

Inside Dimensions		
Length	Width	Depth
45 7/8"	28 3/4"	33"

REV: A

PLEASE REFER TO TECH SPECIFICATIONS IN THE BID DOCUMENT

BID SET

CITY OF FORT LAUDERDALE
PUBLIC WORKS DEPARTMENT
ENGINEERING & ARCHITECTURE

PROJECT # 11715
LAS OLAS ISLES UNDERGROUNDING
O/H TO U/G CONVERSION
COMCAST SUPPLEMENTARY INFORMATION

SHEET NO.
41

11715-BID-DETAILS

C:\USERS\CRAIGB\ONEDRIVE\DESKTOP\SCRATCH\BID\11715-FPL-ADDN.DWG

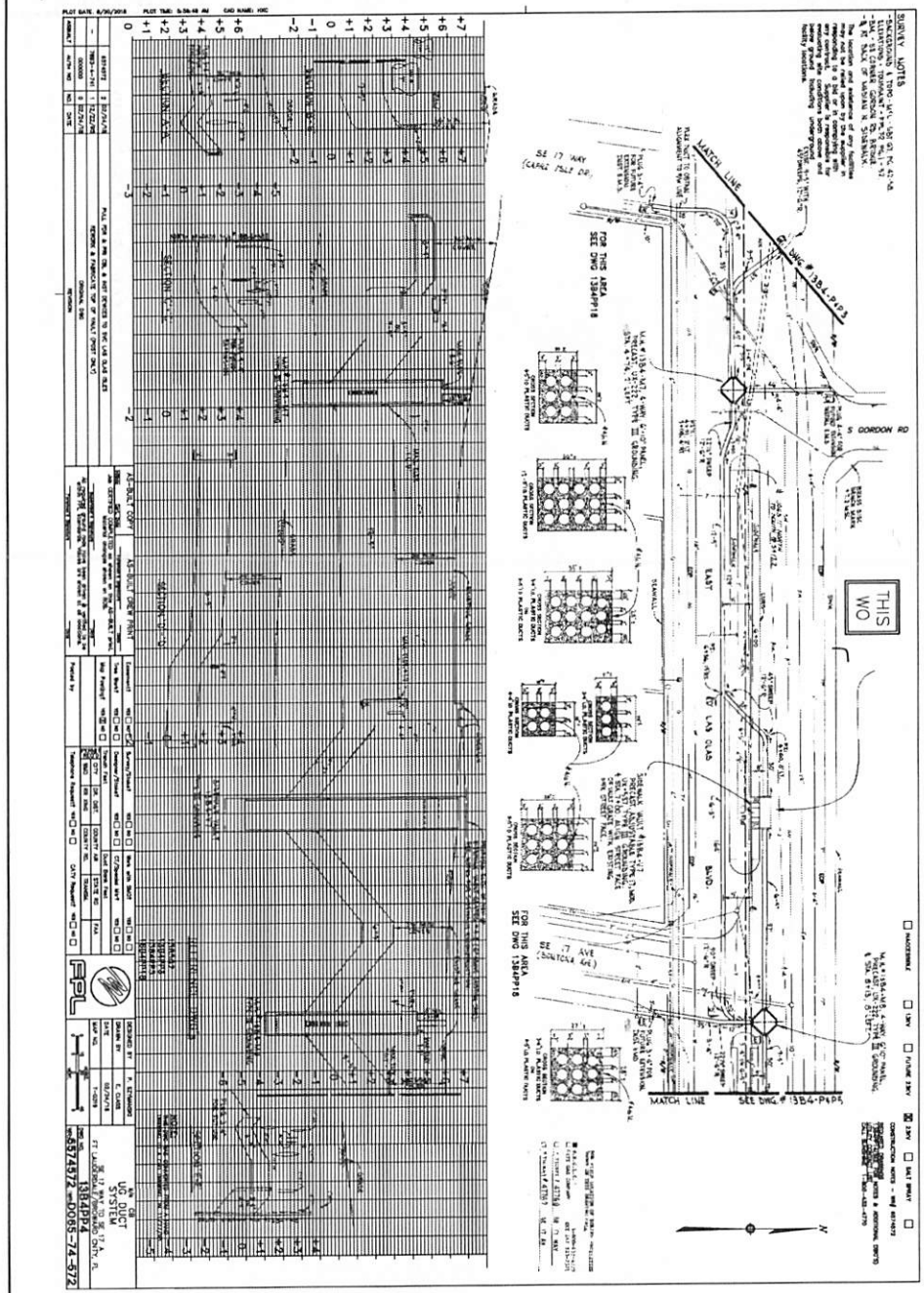

BID SET

SHEET NO.	42
TOTAL	
CAD FILE:	11715-FPL-ADDN
DRAWING FILE NO.	4-13B-P4

PROJECT # 11715
LAS OLAS ISLES UNDERGROUNDING
O/H TO U/G CONVERSION
FPL REFERENCE 1
(FOR INFORMATION ONLY)

REVISIONS				
NO.	DATE	BY	CHK'D	DESCRIPTION

CITY OF FORT LAUDERDALE
PUBLIC WORKS DEPARTMENT
ENGINEERING & ARCHITECTURE
100 North Andrews Avenue, Fort Lauderdale, Florida 33301

DRAWN BY: CMB	DATE: 09/15/20
DESIGNED BY: DG	SCALE: AS NOTED
CHECKED BY: RV	
FIELD BOOK:	

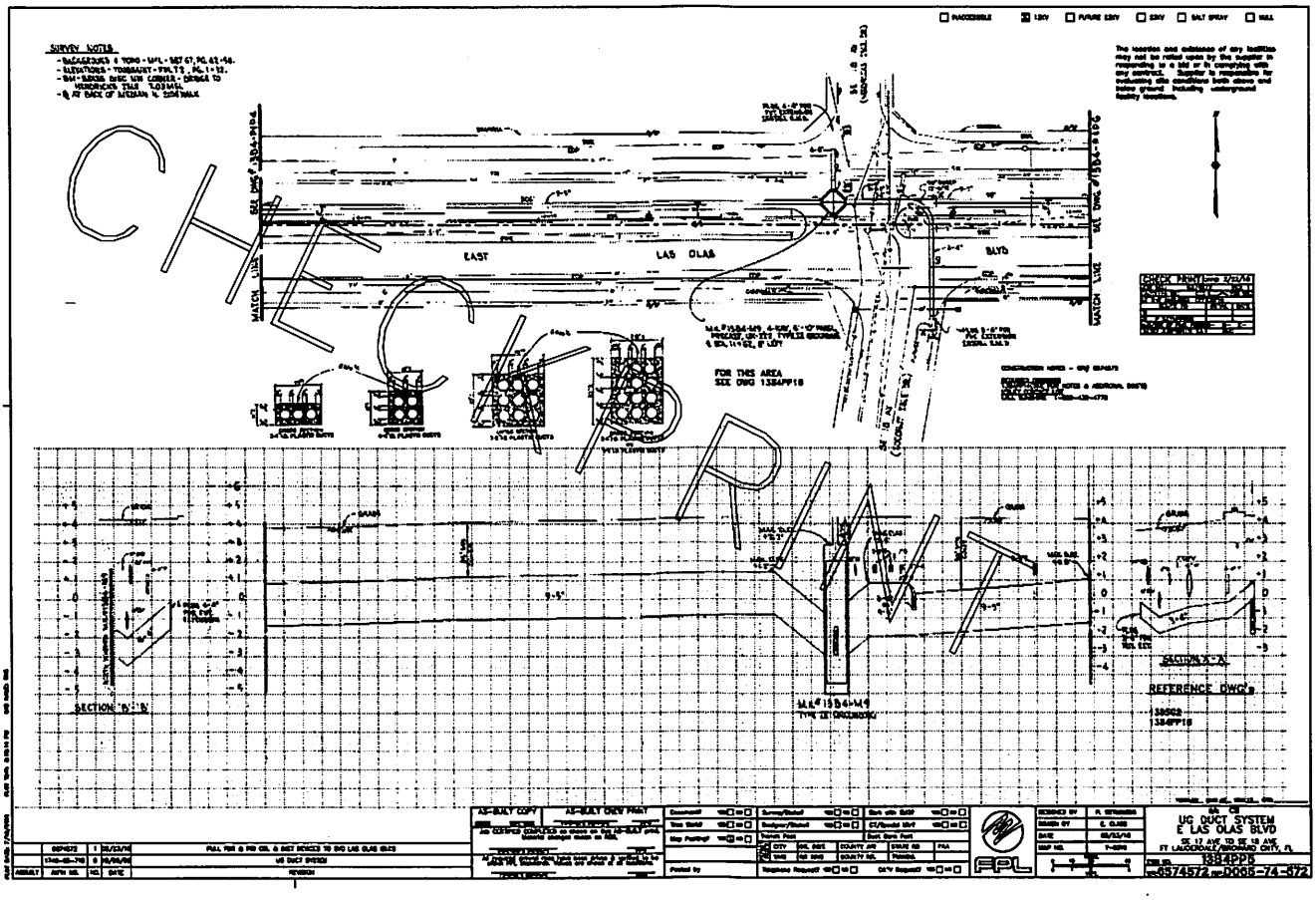

CHECKED

BID SET

CITY OF FORT LAUDERDALE
PUBLIC WORKS DEPARTMENT
ENGINEERING & ARCHITECTURE

PROJECT # 11715
LAS OLAS ISLES UNDERGROUNDING
O/H TO U/G CONVERSION
(FPL REFERENCE 2
(FOR INFORMATION ONLY)

SHEET NO. 43
TOTAL 50
CAD FILE 11715-FPL-400H
DRAWING FILE NO. 4-134-04

C:\USERS\CRNOB\ONEDRIVE\DESKTOP\SCRATCH\BID\11715-FPL-ADDN.DWG
BID SET
PROJECT # 11715
LAS OLAS ISLES UNDERGROUNDING
O/H TO U/G CONVERSION
FPL REFERENCE 3
(FOR INFORMATION ONLY)
CITY OF FORT LAUDERDALE
PUBLIC WORKS DEPARTMENT
ENGINEERING & ARCHITECTURE
44

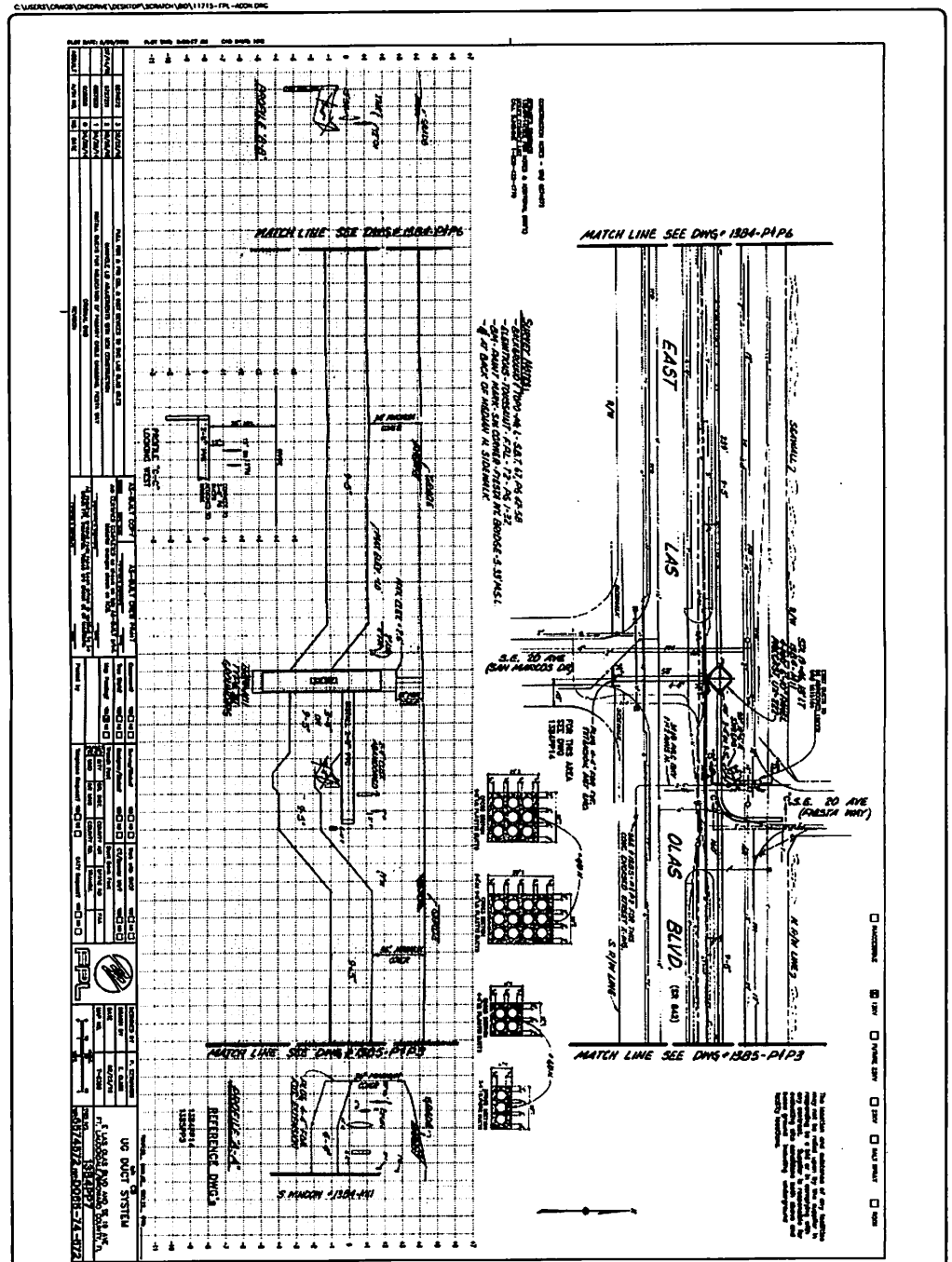

BID SET

PROJECT # 11715
LAS OLAS ISLES UNDERGROUNDING
O/H TO U/G CONVERSION
FPL REFERENCE 4
(FOR INFORMATION ONLY)

REVISIONS

CITY OF FORT LAUDERDALE
PUBLIC WORKS DEPARTMENT
ENGINEERING & ARCHITECTURE

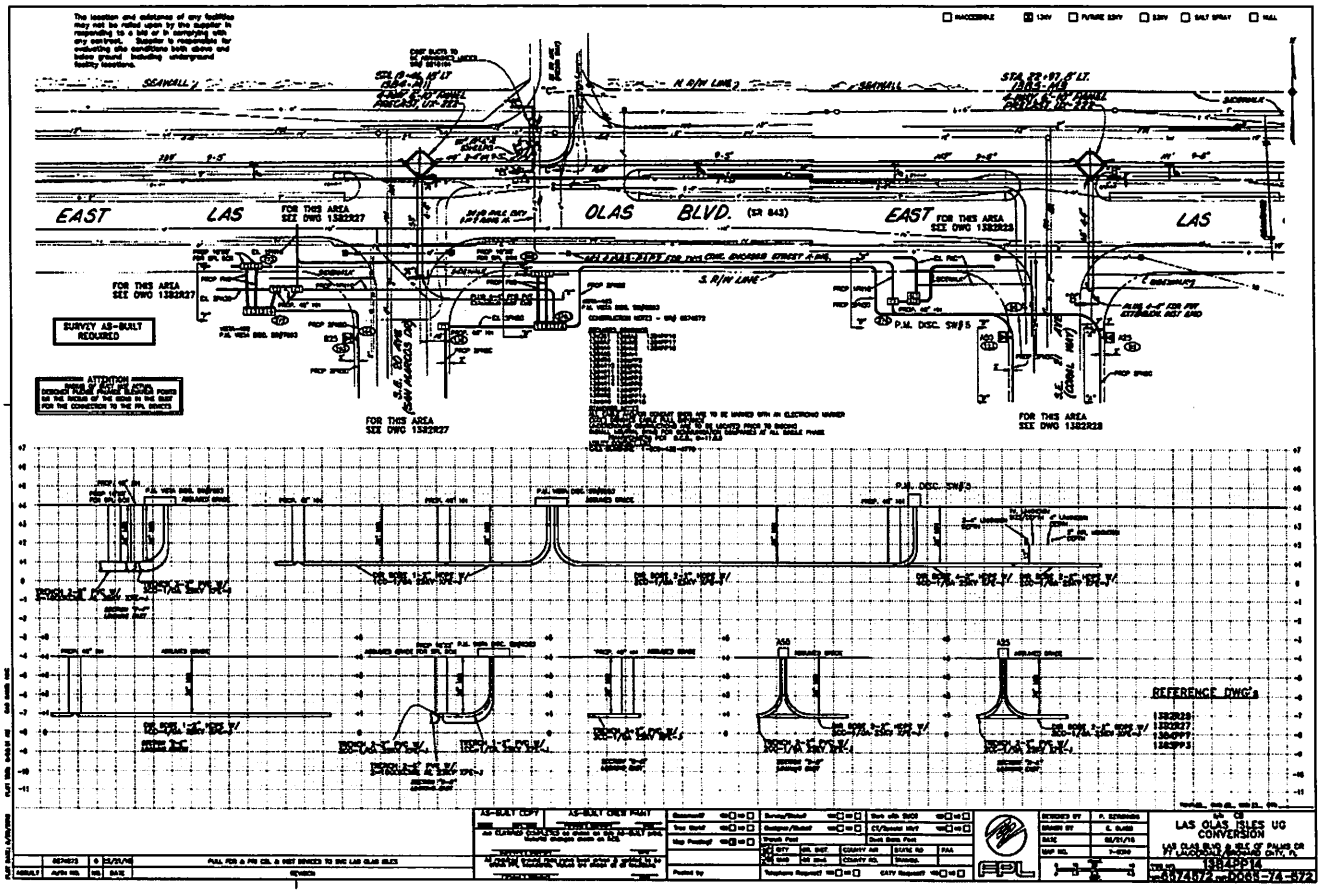

CITY of FORT LAUDERDALE
PUBLIC WORKS DEPARTMENT
ENGINEERING & ARCHITECTURE

PROJECT # 11715
LAS OLAS ISLES UNDERGROUNDING
O/H TO U/G CONVERSION
FPL REFERENCE 5
(FOR REFERENCE ONLY)

LAS OLAS ISLES UG CONVERSION

SHEET NO. 46

BID SET

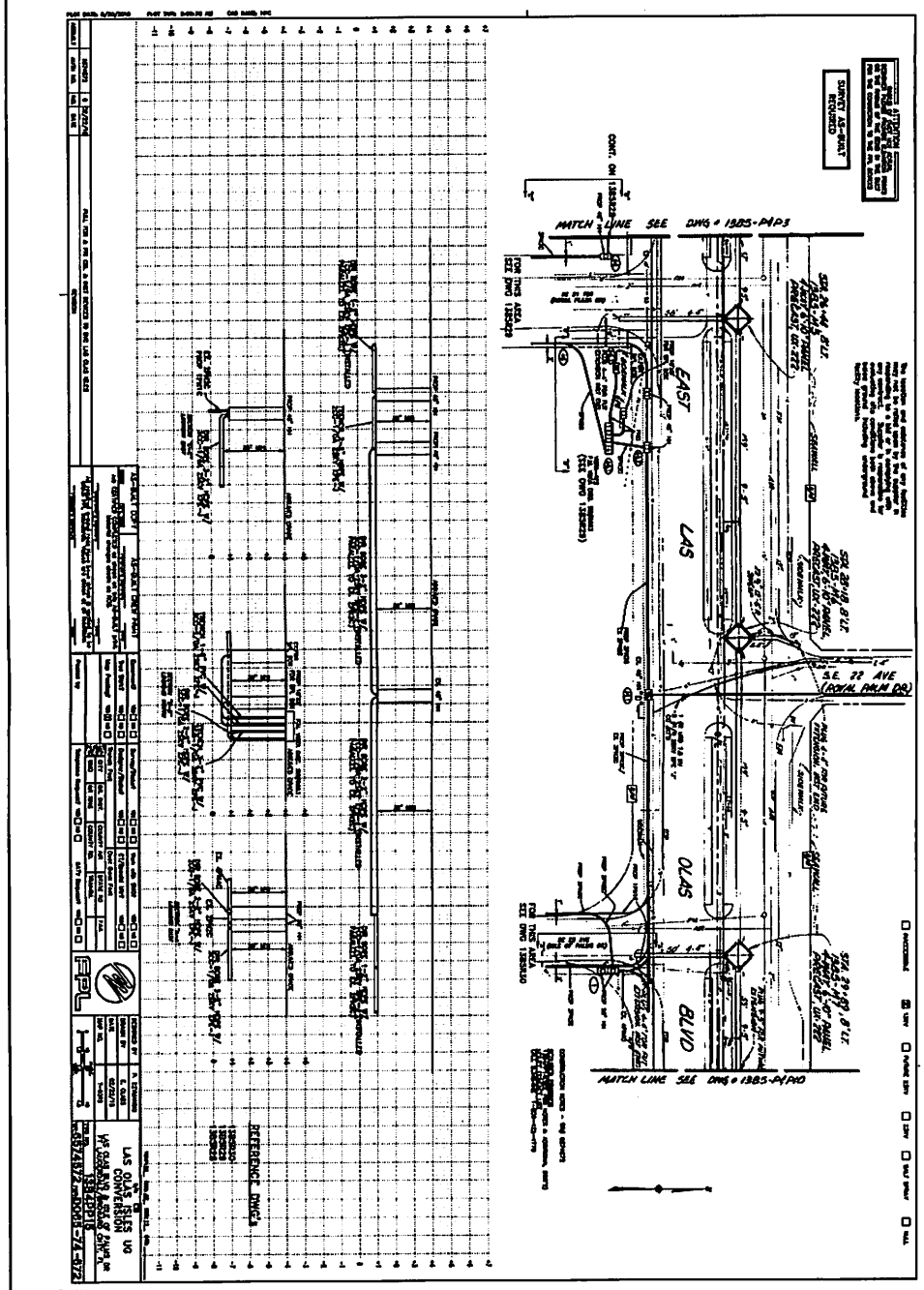

BID SET

PROJECT # 11715
LAS OLAS ISLES UNDERGROUNDING
O/H TO U/G CONVERSION
FPL REFERENCE 6
(FOR REFERENCE ONLY)

REVISIONS

CITY OF FORT LAUDERDALE
PUBLIC WORKS DEPARTMENT
ENGINEERING & ARCHITECTURE
100 North Andrews Avenue Fort Lauderdale, Florida 33301

47

PROJECT # 11715
LAS OLAS ISLES UNDERGROUNDING
O/H TO U/G CONVERSION
FPL REFERENCE 7
(FOR REFERENCE ONLY)

CITY OF FORT LAUDERDALE
PUBLIC WORKS DEPARTMENT
ENGINEERING & ARCHITECTURE

C:\USERS\CRAIGB\ONEDRIVE\DESKTOP\SCRATCH\BID\11715-FPL-ACON.DWG

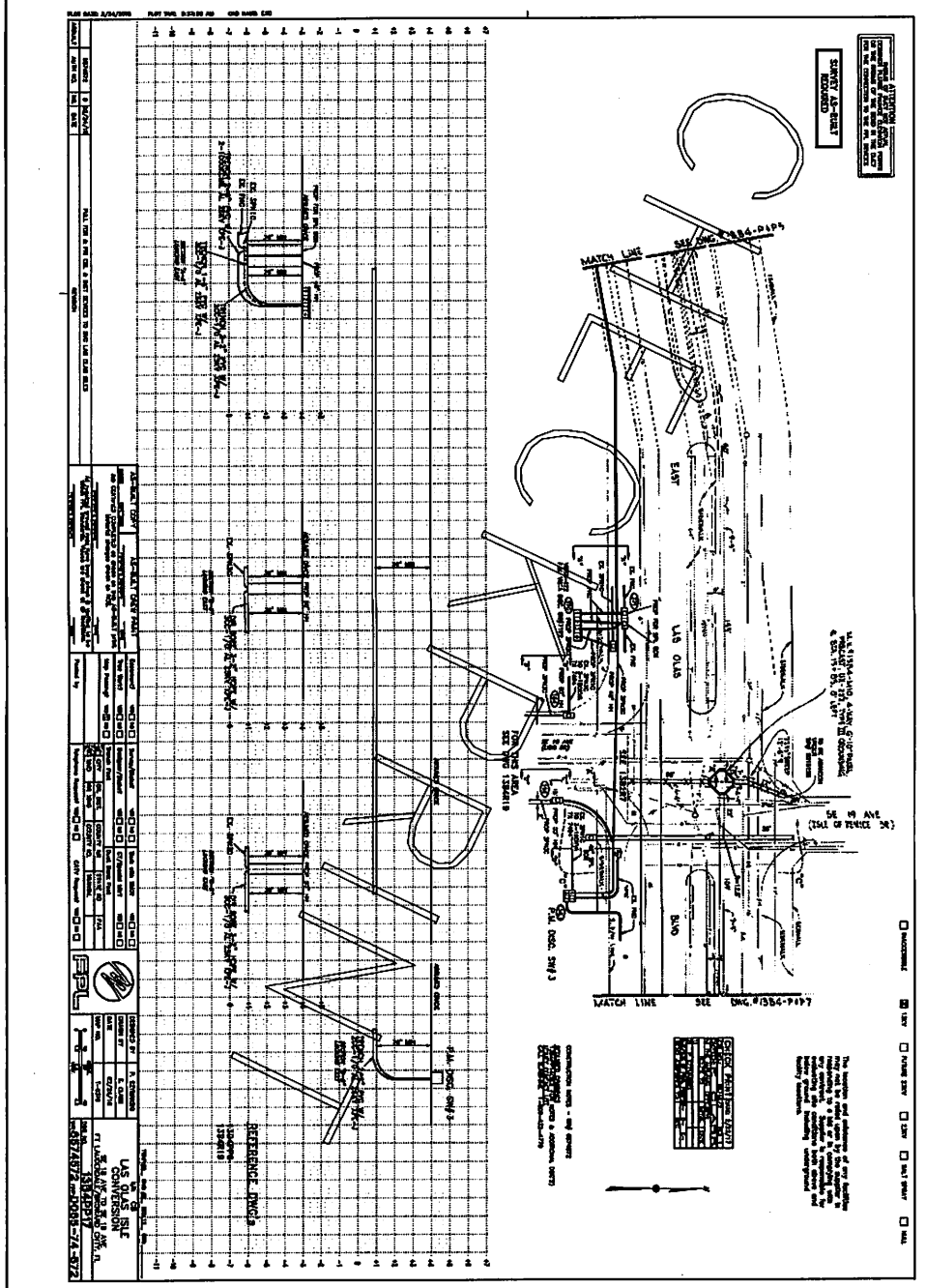

BID SET

PROJECT # 11715
LAS OLAS ISLES UNDERGROUNDING
O/H TO U/G CONVERSION
FPL REFERENCE 8
(FOR REFERENCE ONLY)

REVISIONS

NO.	DATE	BY	CHK'D	DESCRIPTION

CITY OF FORT LAUDERDALE
PUBLIC WORKS DEPARTMENT
ENGINEERING & ARCHITECTURE
100 North Andrews Avenue, Fort Lauderdale, Florida 33301

DRAWN BY: CMB
DATE: 02/16/20
DESIGNED BY: CG
SCALE: AS NOTED
CHECKED BY: RV
FIELD BOOK:

SHEET NO. 49
TOTAL SHEETS 49

BID SET

PROJECT # 11715
LAS OLAS ISLES UNDERGROUNDING
O/H TO U/G CONVERSION
FPL REFERENCE 9
(FOR REFERENCE ONLY)

CITY OF FORT LAUDERDALE
PUBLIC WORKS DEPARTMENT
ENGINEERING & ARCHITECTURE

CITY OF FORT LAUDERDALE
PUBLIC WORKS DEPARTMENT

MINORITY BUSINESS ENTERPRISE (MBE) - WOMEN BUSINESS ENTERPRISE (WBE)

PRIME CONTRACTOR IDENTIFICATION FORM

In order to assist us in identifying the status of those companies doing business with the City of Fort Lauderdale, this form must be completed and returned with your bid package.

Name of Firm:

Address of Firm:

Telephone Number:

Name of Person Completing Form:

Title:

Signature:

Date:

City Project Number:

City Project Description:

Please check the item(s) which properly identify the status of your firm:

☐ Our firm is not a MBE or WBE.

☐ Our firm is a MBE, as at least 51 percent is owned and operated by one or more socially and economically disadvantaged individuals.

☐ American Indian ☐ Asian ☐ Black ☐ Hispanic

☐ Our firm is a WBE, as at least 51 percent is owned and operated by one or more women.

☐ American Indian ☐ Asian ☐ Black ☐ Hispanic

MBE/WBE CONTRACTOR INFORMATION

The City, in a continuing effort, is encouraging the increased participation of minority and women-owned businesses in Public Works Department related contracts. Along those lines, we are requiring that each firm provide documentation detailing their own programs for utilizing minority and women-owned businesses.

Submit this information as a part of this bid package and refer to the checklist, to ensure that all areas of concern are covered. The low responsive bidder may be contacted to schedule a meeting to discuss these objectives. It is our intention to proceed as quickly as possible with this project, so your cooperation in this matter is appreciated.

CONTRACTOR CHECKLIST

☐ List Previous City of Fort Lauderdale Contracts

☐ Number of Employees in your firm
--Percent (%) Women
--Percent (%) Minorities
--Job Classifications of Women and Minorities

☐ Use of minority and/or women subcontractors on past projects.

☐ Nature of the work subcontracted to minority and/or women-owned firms.

☐ How are subcontractors notified of available opportunities with your firm?

☐ Anticipated amount to be subcontracted on this project.

//

☐ Anticipated amount to be subcontracted to minority and/or women-owned businesses on this project.

//

QUESTIONNAIRE SHEET

PLEASE PRINT OR TYPE:

Firm Name:

President

Business Address:

Telephone: Fax:

E-Mail Address:

What was the last project of this nature which you completed? Include the year, description, and contract value.

The following are named as three corporations and representatives of those corporations for which you have performed work similar to that required by this contract, and which the City may contact as your references (include addresses, telephone numbers and e-mail addresses). Include the project name, year, description, and contract value.

How many years has your organization been in business?

Have you ever failed to complete work awarded to you; if so, where and why?

The name of the qualifying agent for the firm and his position is:

Certificate of Competency Number of Qualifying Agent:

Effective Date: Expiration Date:

Licensed in: Engineering Contractor's License #

(County/State)

Expiration Date:

NOTE: To be considered for award of this contract, the bidder must submit a financial statement upon request.

NOTE: Contractor must have proper licensing and shall provide copy of same with his proposal.

QUESTIONNAIRE SHEET

1. Have you personally inspected the proposed work and have you a complete plan for its performance?

2. Will you sublet any part of this work? If so, list the portions or specialties of the work that you will.

a)

b)

c)

d)

e)

f)

g)

3. What equipment do you own that is available for the work?

4. What equipment will you purchase for the proposed work?

5. What equipment will you rent for the proposed work?

TRENCH SAFETY

Bidder acknowledges that included in the appropriate bid items of his bid and in the Total Bid Price are costs for complying with the Florida Trench Safety Act, Florida Statutes 553.60 – 553.64. The bidder further identifies the costs of such compliance to be summarized below:

Trench Safety Measure (Description)	Units of Measure (LF/SF)	Unit (Quantity)	Unit Cost	Extended Cost
A.			$	$
B.			$	$
C.			$	$
D.			$	$
			Total: $	

The bidder certifies that all trench excavation done within his control in excess of five feet (5') in depth shall be in accordance with the Occupational Safety and Health Administration's excavation safety standards, C.F.R. s. 1926.650 Subpart P., and the Florida Trench Safety Act, Florida Statutes 553.60-553.64.

Failure to complete the above may result in the bid being declared non-responsive.

DATE: _____ _____

(SIGNATURE)

STATE OF: _____ COUNTY OF: _____

PERSONALLY APPEARED BEFORE ME, the undersigned authority,

_____

(Name of Individual Signing)

_____ who, after first being duly sworn by me,
_____ affixed his/her signature in the space provided above on this
_____ day of _____, 20_____.

_____

NOTARY PUBLIC

My Commission Expires: _____

NON-COLLUSION STATEMENT:

By signing this offer, the vendor/contractor certifies that this offer is made independently and *free* from collusion. Vendor shall disclose below any City of Fort Lauderdale, FL officer or employee, or any relative of any such officer or employee who is an officer or director of, or has a material interest in, the vendor's business, who is in a position to influence this procurement.

Any City of Fort Lauderdale, FL officer or employee who has any input into the writing of specifications or requirements, solicitation of offers, decision to award, evaluation of offers, or any other activity pertinent to this procurement is presumed, for purposes hereof, to be in a position to influence this procurement.

For purposes hereof, a person has a material interest if they directly or indirectly own more than 5 percent of the total assets or capital stock of any business entity, or if they otherwise stand to personally gain if the contract is awarded to this vendor.

In accordance with City of Fort Lauderdale, FL Policy and Standards Manual, 6.10.8.3,

> 3.3. City employees may not contract with the City through any corporation or business entity in which they or their immediate family members hold a controlling financial interest (e.g. ownership of five (5) percent or more).
>
> 3.4. Immediate family members (spouse, parents and children) are also prohibited from contracting with the City subject to the same general rules.

Failure of a vendor to disclose any relationship described herein shall be reason for debarment in accordance with the provisions of the City Procurement Code.

NAME	RELATIONSHIPS

In the event the vendor does not indicate any names, the City shall interpret this to mean that the vendor has indicated that no such relationships exist.

Authorized Signature

Title

Name (Printed)

Date

CONTRACTOR'S CERTIFICATE OF COMPLIANCE WITH NON-DISCRIMINATION PROVISIONS OF THE CONTRACT

The completed and signed form should be returned with the Contractor's submittal. If not provided with submittal, the Contractor must submit within three business days of City's request. Contractor may be deemed non-responsive for failure to fully comply within stated timeframes.

Pursuant to City Ordinance Sec. 2-187(c), bidders must certify compliance with the Non-Discrimination provision of the ordinance.

The Contractor shall not, in any of his/her/its activities, including employment, discriminate against any individual on the basis of race, color, national origin, religion, creed, sex, disability, sexual orientation, gender, gender identity, gender expression, or marital status.

1. The Contractor certifies and represents that he/she/it will comply with Section 2-187, Code of Ordinances of the City of Fort Lauderdale, Florida, as amended by Ordinance C-18-33 (collectively, "Section 2-187").

2. The failure of the Contractor to comply with Section 2-187 shall be deemed to be a material breach of this Agreement, entitling the City to pursue any remedy stated below or any remedy provided under applicable law.

3. The City may terminate this Agreement if the Contractor fails to comply with Section 2-187.

4. The City may retain all monies due or to become due until the Contractor complies with Section 2-187.

5. The Contractor may be subject to debarment or suspension proceedings. Such proceedings will be consistent with the procedures in section 2-183 of the Code of Ordinances of the City of Fort Lauderdale, Florida.

Authorized Signature Print Name and Title

Date

CONTRACT PAYMENT METHOD

The City of Fort Lauderdale has implemented a Procurement Card (P-Card) program which changes how payments are remitted to its vendors. The City has transitioned from traditional paper checks to credit card payments via MasterCard or Visa as part of this program.

This allows you as a vendor of the City of Fort Lauderdale to receive your payments fast and safely. No more waiting for checks to be printed and mailed.

In accordance with the contract, payments on this contract will be made utilizing the City's P-Card (MasterCard or Visa). Accordingly, bidders must presently have the ability to accept these credit cards or take whatever steps necessary to implement acceptance of a card before the start of the contract term, or contract award by the City.

All costs associated with the Contractor's participation in this purchasing program shall be borne by the Contractor. The City reserves the right to revise this program as necessary.

By signing below you agree with these terms.

Please indicate which credit card payment you prefer:

☐ MasterCard

☐ Visa

Company Name

Name (Printed) Signature

Date Title

CONSTRUCTION BID CERTIFICATION

Please Note: It is the sole responsibility of the bidder to ensure that his bid is submitted electronically through www.BidSync.com prior to the bid opening date and time listed. Paper bid submittals will not be accepted. All fields below must be completed. If the field does not apply to you, please note N/A in that field.

If you are a foreign corporation, you may be required to obtain a certificate of authority from the Department of State, in accordance with Florida Statute §607.1501 (visit http://www.dos.state.fl.us/).

Company: (Legal Registration)

Address:

City: State: Zip:

Telephone No.: FAX No.: Email:

Check box if your firm qualifies for MBE / SBE / WBE: ☐

If a corporation, state the name of the President, Secretary and Resident Agent. If a partnership, state the names of all partners. If a trade name, state the names of the individuals who do business under the trade name.

Name	**Title**	**Name**	**Title**
Name	**Title**	**Name**	**Title**

ADDENDUM ACKNOWLEDGEMENT - Bidder acknowledges that the following addenda have been received and are included in the proposal:

Addendum No.	Date Issued	Addendum No.	Date Issued	Addendum No.	Date Issued

VARIANCES: If you take exception or have variances to any term, condition, specification, or requirement in this bid you must specify such variance in the space provided below or reference in the space provided below all variances contained on other pages within your bid. Additional pages may be attached if necessary. No variances will be deemed to be part of the bid submitted unless such is listed and contained in the space provided below. The City does not, by virtue of submitting a variance, necessarily accept any variances. If no statement is contained in the below space, it is hereby implied that your response is in full compliance with this competitive solicitation. If you do not have variances, simply mark N/A. **You must also click the "Take Exception" button.**

The below signatory affirms that he has or will obtain all required permits and licenses from the appropriate agencies, and that his firm is authorized to do business in the State of Florida. The below signatory agrees to furnish all labor, tools, material, equipment and supplies, and to sustain all the expense incurred in doing the work set forth in strict accordance with the bid plans and contract documents at the unit prices indicated if awarded a contract. The below signatory has not divulged to, discussed, or compared this bid with other bidders, and has not colluded with any other bidder or parties to this bid whatsoever. Furthermore, the undersigned guarantees the truth and accuracy of all statements and answers contained in this bid. The below signatory also hereby agrees, by virtue of submitting or attempting to submit a bid, that in no event shall the City's liability for bidder's direct, indirect, incidental, consequential, special or exemplary damages, expenses, or lost profits arising out of this competitive solicitation process, including but not limited to public advertisement, bid conferences, site visits, evaluations, oral presentations, or award proceedings exceed the amount of Five Hundred Dollars ($500.00). This limitation shall not apply to claims arising under any provision of indemnification or the City's protest ordinance contained in this competitive solicitation.

Submitted by:

Name (printed) Signature

Date Title

Revised 4/28/2020

Question and Answers for Bid #12453-613 - Las Olas Isles Undergrounding of Overhead Utilities (P11715)

Overall Bid Questions

Question 1

What is the estimate and/or budget of this project? **(Submitted: Oct 1, 2020 8:31:00 AM EDT)**

Answer

- Construction cost is approximately $3.7 million dollars. **(Answered: Oct 2, 2020 1:49:42 PM EDT)**

Question 2

Special Conditions-Paragraph 5 states that "the work shall be substantially completed within180 calendar days after the day notice to proceed is issued". If work shall commence with in 30 days of notice to proceed this would leave 5 months to complete the work. Please confirm the accuracy of this expectation. **(Submitted: Oct 1, 2020 4:31:58 PM EDT)**

Answer

- Once the Notice to Proceed is provided to the chosen Contractor, the contractor will have 180 days to reach substantial completion.
i.e. If the Contractor waits 10 days after issuance of the Notice to Proceed to begin construction then he has 170 days to complete work from the Notice to Proceed. Consequently, if the Contractor waits 30 days to begin construction after Notice to Proceed date then he will have only 150 days to complete the Project. **(Answered: Oct 6, 2020 10:06:18 AM EDT)**

Question 3

1. Please provide the FPL, AT&T and Comcast drawings.
2. On Page ITB-2 of the specifications, it states that the Contractor is responsible for installing conduit and related facilities for both AT&T and Comcast. It also states for both that they will provide and install their own material, equipment, accessories, etc. Please clarify if AT&T and Comcast are providing the conduit since the bid items show the price includes the conduit. Also please clarify what related facilities the Contractor is responsible for.
3. On Page ITB-2 it states that FPL is responsible to install the service cable and connect it to the new underground system but there is a bid item for Service Connections. What is included in this bid item?
4. The description of all the FPL bid items show to "Furnish all materials, labor and equipment..." FPL provides all the material for these projects so please clarify.
5. Please provide specifications for the FPL Bump Out Assembly (removable barriers). The bid item for this says it includes (2) bollards but they are not shown in the details. Are bollards required?
6. Are we to place the two hedges on either side of the transformer? If so, then please provide the type of hedge to be used.
7. It appears that we are boring the AT&T and Comcast together, but the bid items are only for 1-4" Conduit and 1-2" Conduit. Are these separate bores? **(Submitted: Oct 7, 2020 5:33:13 PM EDT)**

Answer

- 1. The drawings are available in the plan sheets provided in the file folder of this bid package.

2. Yes, AT&T and Comcast are providing the conduit. The Contractor is responsible for installing the conduit and related facilities according to

the provided plans. The related facilities are those items necessary for conduit installation.

3. This item refers to the connection to the residence(s). Please see page 27 and 100, Additional Work â" Overhead to Underground Service Conversions for Individual Property.

4. FPL supplies material in bulk, but does not provide installation. The Contractor is responsible for the installation. (For example, to install a transformer, the contractor is responsible for providing a concrete pad and placing the transformer in the location identified in the plans.)

5. The Bump Out Details are shown on the plans, see Sheet 38. At this time, bollards will not be installed but collected by the City until installation becomes a necessity.

6. Hedges will be replaced with a site-specific material to be determined on a street-by-street basis.

7. Each utility will have its own conduit. **(Answered: Oct 12, 2020 10:01:25 AM EDT)**

Question 4

1. Can you please provide the actual FPL drawings as well as the comcast and ATT. I understand we have the combined prints available to us. **(Submitted: Oct 15, 2020 12:57:24 PM EDT)**

Answer

- The individual plans of FPL, ATT and Comcast are provided in the file 11715 â" BID â" BINDER 10232020. They can be viewed by utilizing the layer feature embedded in the pdf to differentiate between the utilities. **(Answered: Oct 23, 2020 12:35:21 PM EDT)**

Question 5

1. Can you please confirm that the contractor is not responsible for the installation of the FPL service cable from the transformer to the meter as outlined in your specs under "Additional Work - Overhead to Underground Service Conversions for Individual Property"

2. If is responsible for installing the cable and connecting it to the new underground system please clarify bid items 12453-613-01-52, 12453-613-01-53, 12453-613-01-54 and 12453-613-01-55.

3. Bid item 12453-613-01-56 states "Install FPL Bump Out Assembly (Removable Barriers) Padmount Transformer Protection" I assume the barrier is the type-D curb. Please provide a specification for a removable Type-D curb. **(Submitted: Oct 15, 2020 1:18:21 PM EDT)**

Answer

- For #12453-613-51, this item is a FPL Feeder Riser pole package with cable, u-guard & connectors to be installed by the contractor on an existing wood pole with no disconnect switches included in package, at applicable locations.
For #12453-613-52, this item is a FPL Feeder Riser pole package with cable, u-guard & connectors to be installed by the contractor on an existing concrete pole with no disconnect switches included in package, at applicable locations.
For #12453-613-53, this item is a FPL Meter/Service package, where the contractor is installing FPL service conduit and cable to intercept the existing underground service cable, at applicable locations.
For #12453-613-54, this item is a FPL Meter/Service package which converts/replace the existing overhead service meter can (enclosure), at applicable locations.

For #12453-613-55, this item is to install FPL 2â service conduit to include #4/0 cable in a 24â trench, as needed per location.
For #12453-613-56, this item is for a parallel service which requires the installation of 2 - FPL 2â service conduit to include 2 - #4/0 cable in a 24â trench, as needed per location.

3. The Bump Out Details are shown on the plans, see Sheet 38. At this time, bollards will not be installed but collected by the City until installation becomes a necessity. **(Answered: Oct 23, 2020 12:35:21 PM EDT)**

Question 6

Sheet-09 originating at the existing transformer in the median at S.E. 17th Way entrance identifies 3PN3C exiting and traveling down Mola Ave. The split across the entrance of Mola also identifies 3PN3C crossing Mola Ave. to tie in with the return loop. How can the 3PN3C service both runs? Should the lines exiting the transformer be 6PN3C to service this split? Will a splice box be provided at both sides of the street to provide connection points for this split? **(Submitted: Oct 15, 2020 3:22:50 PM EDT)**

Answer

- The existing box thatâ™s located in the median at S.E. 17th Way (Isle of Capri Dr.) entrance is not a padmounted transformer, it is existing switch cabinet #4990. Also, proposed on the north side of Las Olas Blvd is the installation of a new switch cabinet, that will have 3PN3C crossing Las Olas Blvd that bypasses the existing switch cabinet #4990. Therefore you are partially correct, but at the location in question, it should be identified as 3PN3C, not 6PN3C.

Once the 3PN3C leaves the new switch cabinet, it will continue south along Isle of Capri Dr. turning west onto Mola Ave, then continuing west along Mola Ave; next looping back east to Isle of Capri Dr., and finally turning south onto the west side of Isle of Capri Dr. The 3PN3C continues south along the west side of Isle of Capri Dr., then loops back north along the east side of Isle of Capri Dr. and connects to vault #13B4V2. Next, when the 3PN3C leaves the vault, it crosses Isle of Capri Dr. going west and connects into switch cabinet #4990, located in the median.

The 3PN3C will then come out of switch cabinet #4990, and head east, creating 6PN6C crossing Isle of Capri and will then run along the east side of Isle of Capri heading north, which will create a loop system. **(Answered: Oct 23, 2020 12:29:55 PM EDT)**