Solicitation 12712-123

River Oaks Pump station Project 12745

Bid Designation: Public

CITY OF FORT LAUDERDALE

City of Fort Lauderdale

Bid 12712-123
River Oaks Pump station Project 12745

Bid Number	**12712-123**
Bid Title	**River Oaks Pump station Project 12745**
Bid Start Date	**Jul 11, 2022 10:52:47 AM EDT**
Bid End Date	**Sep 2, 2022 2:00:00 PM EDT**
Question & Answer End Date	**Aug 22, 2022 5:00:00 PM EDT**
Bid Contact	**Fausto Vargas** **Procurement Specialist** **Finance - Procurement Division** **fvargas@fortlauderdale.gov**
Contract Duration	**One Time Purchase**
Contract Renewal	**Not Applicable**
Prices Good for	**120 days**
Pre-Bid Conference	**Jul 20, 2022 10:00:00 AM EDT** **Attendance is optional** **Location: Microsoft Teams meeting** **Join on your computer or mobile app** **Click here to join the meeting** **Or join by entering a meeting ID** **Meeting ID: 226 525 179 834** **Passcode: 5ufYZj** **Or call in (audio only)** **+1 954-686-7296,,837797264# United States, Fort Lauderdale** **Phone Conference ID: 837 797 264#** **Find a local number | Reset PIN**
Bid Comments	**Sealed bids will be received electronically until 2:00 p.m., local time, on Thursday August 18th, 2022, and opened online immediately thereafter in the 5th Floor Conference Room, City Hall, 100 North Andrews Avenue, Fort Lauderdale, Florida 33301, for BID NO., 12712-123, PROJECT NO., 12745, River Oaks Pumpstations** **All openings will be held on the BIDSYNC.COM platform. Once the Procurement Specialist opens the solicitation, the bid tabulations may be viewed immediately on a computer, laptop, cell phone, or any other device with WiFi access. The opening may also be viewed in real time through a "Microsoft Teams" or similar type platform by using the following information:** **Topic: River Oaks Pumpstations opening** **Time: Aug 18, 2022 02:00 PM Eastern Time (US and Canada)** **Microsoft Teams meeting** **Join on your computer or mobile app** **Click here to join the meeting** **Or join by entering a meeting ID** **Meeting ID: 258 798 875 799** **Passcode: kSaJwU**

Or call in (audio only)
+1 954-686-7296,,605655449# United States, Fort Lauderdale
Phone Conference ID: 605 655 449#
Find a local number | Reset PIN

Anyone requesting assistance or having further inquiry in this matter must contact the Procurement Specialist indicated on the solicitation, via the Question and Answer (Q&A) platform on Bidsync.com before the Last Day for Questions indicated in the Solicitation.

The project is located at the River Oaks Preserve located at the River Oaks Preserve (2117 SW 19 Ave), in the City of Fort Lauderdale. The work to be accomplished under this contract includes, but is not limited to, installation of wet well, effluent boxes, intake structures, chain link fence installation, waterline connections, sheet pile installation, concrete piling installation, landscaping & pavement restoration, handrail installation, pump station instrumentation installation, mechanical, electrical and plumbing infrastructure installation, generator and transformer pad work and Maintenance of Traffic (MOT).

Drawing Plans: This Project consists of Drawing File No., 4-142-97, 85 sheets. Drawing plans may be obtained free of charge at BIDSYNC.COM.

Licensing Requirements: Contractor should either be a Certified Underground Contractor (CUC) or a Certified General Contractor (CGC).

NOTE: Payment on this contract will be made by Visa or MasterCard.

Pre-Bid Meeting/Site visit: A pre-bid meeting and/or site visit will be held on Wednesday July 20, 10:00am, in real time through a "Microsoft Teams" or similar type platform by using the following information:

Microsoft Teams meeting
Join on your computer or mobile app
Click here to join the meeting
Or join by entering a meeting ID
Meeting ID: 226 525 179 834
Passcode: 5ufYZj
Or call in (audio only)
+1 954-686-7296,,837797264# United States, Fort Lauderdale
Phone Conference ID: 837 797 264#
Find a local number | Reset PIN

While attendance is not mandatory, it is strongly suggested that all contractors attend the pre-proposal conference. It will be the sole responsibility of the bidder to inspect the City's location and become familiar with the scope of the City's requirements and systems prior to submitting a proposal. No variation in price or conditions shall be permitted based upon a claim of ignorance. Submission of a proposal will be considered evidence that the proposer has familiarized himself with the nature and extent of the work, equipment, materials, and labor required.

Bid Security: A certified check, cashier's check, bank officer's check or bid bond for FIVE percent (5%) of the bid amount, made payable to the City of Fort Lauderdale, Florida, shall accompany each offer.

Bid Bonds:

Bidders can submit bid bonds for projects four different ways.

BidSync allows bidders to submit bid bonds electronically directly through their system using Surety 2000. For more information on this feature and to access it, contact BIDSYNC customer care department.

Bidders may upload their original executed bid bond on BIDSYNC to accompany their electronic bids and deliver the original, signed and sealed hard copy within five (5) business days after bid opening, with the company name, bid number and title clearly indicated.

Bidders can hand deliver their bid bond in a sealed envelope to the Finance Department, Procurement Services Division, 100 North Andrews Avenue, Room 619, Fort Lauderdale, Florida 33301-1016, before time of bid opening, with the company name, bid number and title clearly indicated on the envelope.

Bidders can mail their bid bond to the Finance Department, Procurement Services Division, 100 North Andrews Avenue, Room 619, Fort Lauderdale, Florida 33301-1016, before time of bid opening, with the company name, bid number and title clearly indicated on the envelope. NOTE: Bond must be received in Procurement and time stamped before bid opening.

It will be the sole responsibility of the bidder to ensure that his bid is submitted prior to the bid opening date and time listed. PAPER BID SUBMITTALS WILL NOT BE ACCEPTED. BIDS MUST BE SUBMITTED ELECTRONICALLY VIA BIDSYNC.COM

Certified Checks, Cashier's Checks and Bank Drafts:
These CANNOT be submitted via BIDSYNC, nor are their images allowed to be uploaded and submitted with your electronic bid. These forms of securities, as well as hard copy bid bonds, must be received on or before the Invitation to Bid (ITB) opening date and time, at the Finance Department, Procurement Services Division, 100 North Andrews Avenue, Room 619, Fort Lauderdale, Florida 33301-1016, with the bid number and title clearly indicated on the envelope.

It is the bidder's sole responsibility to ensure that his bid bond or other bid security is received by the Procurement Services Division before time of bid opening. Failure to adhere to this requirement may be grounds to consider the bid as non-responsive.

The City of Fort Lauderdale reserves the right to waive any informality in any or all bids and to reject any or all bids.For information concerning technical specifications, please utilize the Q&A platform provided by BIDSYNC at www.bidsync.com. Questions of a material nature must be received prior to the cut-off date specified in the solicitation. Material changes, if any, to the scope of services or bidding procedures, will only be transmitted by written addendum. (See addendum section of BIDSYNC Site). Bidders please note: No part of your bid can be submitted via FAX. No variation in price or conditions shall be permitted based upon a claim of ignorance. Submission of a bid will be considered evidence that the bidder has familiarized himself with the nature and extent of the work, equipment, materials, and labor required. The entire bid response must be submitted in accordance with all specifications contained in this solicitation.

Information on bid results and projects currently out to bid can be obtained on the City's website – https://www.fortlauderdale.gov/government/departments-a-h/finance/procurement-services
For general inquiries, please call (954) 828-5933.

Addendum # 1

New Documents	**Addendum 1.pdf**

Addendum # 2

New Documents	**Addeundum 2.pdf**		
Previous End Date	**Aug 18, 2022 2:00:00 PM EDT**	New End Date	**Sep 2, 2022 2:00:00 PM EDT**
Previous Q & A End Date	**Aug 8, 2022 5:00:00 PM EDT**	New Q & A End Date	**Aug 22, 2022 5:00:00 PM EDT**

Addendum # 3

New Documents	**Addendum 3.pdf**

Item Response Form

Item	**12712-123--01-01 - Base Bid: Mobilization and Demobilization (5 Percent)**
Lot Description	**Base Bid**
Quantity	**1 lump sum**
Unit Price	

Delivery Location	**City of Fort Lauderdale** See ITB Specifications See ITB Specifications Fort Lauderdale FL 33301 **Qty** 1

Description
The lump sum price for this item shall be full compensation for all mobilization and demobilization activities. This includes, but is not limited to, Performance and Payment Guarantee and insurance, scheduling, project coordination, Contractor staging area, Contractor and Engineer Field Offices, labor associated with permit acquisition, temporary facilities, audio visual documentation of the existing conditions, distribution of flyers to affected residents and businesses, project signs, finish grading, site cleanup and site restoration, and all other activities necessary to prepare and complete the contract work. The payment for mobilization and demobilization shall not exceed 5 percent of the sum of Bid Item Nos. 1 through 7.

Item	**12712-123--01-02 - Base Bid: Record Drawings**
Lot Description	**Base Bid**
Quantity	**1 lump sum**
Unit Price	
Delivery Location	**City of Fort Lauderdale** See ITB Specifications See ITB Specifications Fort Lauderdale FL 33301 **Qty** 1

Description
The lump sum price for this bid item shall be full compensation for preparation and submittal of As Built Record Drawings, furnished in accordance with Contract Documents. For all improvements, the CONTRACTOR shall conform to the City of Fort Lauderdale standards and requirements. See Section 01320 for complete description.

Item	**12712-123--01-03 - Base Bid: Prevention, Control, And Abatement of Erosion and Water Pollution (2 percent)**
Lot Description	**Base Bid**
Quantity	**1 lump sum**
Unit Price	
Delivery Location	**City of Fort Lauderdale** See ITB Specifications See ITB Specifications Fort Lauderdale FL 33301 **Qty** 1

Description
The lump sum price indicated for this bid item shall be full compensation for all labor, equipment, and material necessary for preparation, submittal, approval, and implementation of the NPDES Permit Application Notice of Intent and Notice of Termination, reporting by a person holding a certification as an FDEP NPDES Construction Site Inspector, preparing a Stormwater Pollution Prevention Plan SWPPP and implementation of Best Management Practices BMP and environmental pollution protection throughout construction as outlined in the Contract Documents and required by the City. Payment for this item shall not exceed 2 percent of the of the sum of Bid Item Nos. 1 through 7 and will be made in equal monthly payments throughout the duration of active construction and will not be issued prior to Mobilization.

Item	**12712-123--01-04 - Base Bid: Outfall Pump Station**
Lot Description	**Base Bid**
Quantity	**1 lump sum**
Unit Price	
Delivery Location	**City of Fort Lauderdale**

See ITB Specifications
See ITB Specifications
Fort Lauderdale FL 33301
Qty 1

Description
The lump sum price for this item shall be full compensation for all labor, equipment, and material for all work necessary and required for the construction of the Outfall Pump Station as required in the Contract Documents. This item includes, but is not limited to, all general, civil, mechanical, structural, architectural, electrical, instrumentation and control, ventilation and air conditioning, testing, startup services, and sitework required for a complete and operable system. Item No. 4 includes all work not defined in other Bid Items.

Item	**12712-123--01-05 - Base Bid: Inlet Pump Station**
Lot Description	**Base Bid**
Quantity	**1 lump sum**
Unit Price	
Delivery Location	**City of Fort Lauderdale**

See ITB Specifications
See ITB Specifications
Fort Lauderdale FL 33301
Qty 1

Description
The lump sum price for this item shall be full compensation for all labor, equipment, and material for all work necessary and required for the construction of the Inlet Pump Station as required in the Contract Documents. This item includes, but is not limited to, all general, civil, mechanical, structural, electrical, instrumentation and control, testing, startup services, and sitework required for a complete and operable system.

Item	**12712-123--01-06 - Base Bid: Remove and Dispose of Existing Trees**
Lot Description	**Base Bid**
Quantity	**4 each**
Unit Price	
Delivery Location	**City of Fort Lauderdale**

See ITB Specifications
See ITB Specifications
Fort Lauderdale FL 33301
Qty 4

Description
The unit price for this bid item shall be full compensation per each for all labor, equipment, and materials to remove and dispose of existing Bald Cypress trees up to 28 inches in diameter. Removal and disposal of trees shall include procuring the services of a Licensed Certified Arborist, obtaining of appropriate tree removal permits and reports, spading of tree, root pruning, backfill and the removal and disposal of all vegetative matter associated with the removal as required by the Contract Documents or directed by the ENGINEER.

Item	**12712-123--01-07 - Base Bid: Remove and Relocate Existing Trees**
Lot Description	**Base Bid**
Quantity	**5 each**
Unit Price	
Delivery Location	**City of Fort Lauderdale**

See ITB Specifications
See ITB Specifications
Fort Lauderdale FL 33301
Qty 5

Description

The unit price for this bid item shall be full compensation per each for all labor, equipment, and materials to remove and relocate existing trees as shown on the Contract Documents. Removal and relocation of trees shall include procuring the services of a Licensed Certified Arborist, obtaining of appropriate tree removal permits, spading of tree, root pruning, replanting, maintenance, backfill and the removal and disposal of all vegetative matter associated with the removal or relocation of trees as required by the Contract Documents or directed by the ENGINEER.

CITY OF FORT LAUDERDALE
CONTRACT AND SPECIFICATIONS PACKAGE

BID NO. 12712-123

PROJECT NO. 12745

River Oaks Pump Station

JUAN CARLOS SAMUEL
PROJECT MANAGER II

FAUSTO VARGAS
SENIOR PROCUREMENT SPECIALIST
Telephone: (954) 828-6167 E-mail: fvargas@fortlauderdale.gov

TABLE OF CONTENTS

Description **Pages**

I. BID INFORMATION

Invitation to Bid ..... ITB-1 thru ITB-2
Instruction to Bidders ..... IB-1 thru IB-6
General Conditions ..... GC-1 thru GC-11
Special Conditions ..... SC-1 thru SC-7

II. CONSTRUCTION AGREEMENT (SAMPLE) ..... C-1 thru C-38

III. TECHNICAL SPECIFICATIONS

DIVISION 1 – GENERAL REQUIREMENTS

01005 Intent of Drawings and Specifications 3
01010 Summary of Work 6
01025 Measurement and Payment 3
01070 Abbreviations 7
01090 Reference Standards 2
01200 Project Meetings 4
01300 Submittals Supplement
Hazen Contractors Procore Guidelines 1
01312 Field Engineering 2
01320 Project Record Documents -Supplement
Data Dictionary 3
01400 Quality Control 3
01510 Temporary Utilities 6
01520 Construction Constraints 3
01530 Protection of Existing Facilities 7
01550 Site Access and Storage 2
01560 Temporary Environmental Controls
Supplement – Standard Manatee Conditions 4
01580 Project Notification
Supplement Construction Sign Sample
Supplement 2 – Door Hanger Notification Template 1
01590 Field Office, Equipment and Services 2
01600 Materials and Equipment 3
01660 Equipment Testing and Startup 2
01700 Project Closeout 3

DIVISION 2 - SITE CONSTRUCTION

02015 Mobilization and Demobilization 3
02100 Erosion and Sediment Control – Stormwater Pollution Prevention 4
02200 Site Preparation 2

02220 Demolition 6
02222 Excavation and Backfill for Utilities 4
02224 Excavation and Backfill for Structures 1
02240 Dewatering 5
02281 Termite Control 3
02363 Auger Cast Piles 2
02369 Steel Sheet Piling 7
02371 Geotextiles 10
02468 Pile Load Tests 6
02481 Tree Relocation and Protection 13
02630 Storm Drain Facilities 5
02667 Hydraulic Structures Testing 3
02710 Limerock Base 7
02772 Asphalt Concrete Pavement 13
02920 Sodding 13
02930 Landscape Work 10

DIVISION 3 - CONCRETE

03100 Concrete Formwork 3
03200 Concrete Reinforcement 4
03290 Joints in Concrete 2
03300 Cast-in-Place Concrete 6
03315 Grout 4
03350 Concrete Finishes 1
03370 Concrete Curing 5
03400 Precast Concrete, General 3
03415 Precast Prestressed Concrete Hollow Core Planks 2
03480 Precast Concrete Manholes, Handholes and Vaults 7

DIVISION 4 - MASONRY

04220 Concrete Block Masonry 3

DIVISION 5 - METALS

05010 Metal Materials 3
05035 Galvanizing 4
05050 Metal Fastening 2
05120 Structural Steel 6
05140 Structural Aluminum 4
05500 Metal Fabrications 1
05510 Metal Stairs 5
05515 Ladders 3
05520 Handrails and Railings 2
05531 Grating, Floor Plates and Access Hatches 7
05540 Castings 10
05830 Bearing Devices and Anchoring 6

DIVISION 6 - WOODS AND PLASTICS

06100 Rough Carpentry 3

DIVISION 7 - THERMAL AND MOISTURE PROTECTION

07160 Bituminous Dampproofing 3
07190 Vapor Barrier 4
07240 Exterior Insulation Finish System 2
07270 Firestopping 6
07510 Built Up Bituminous Roofing 4
07600 Flashing and Roofing Accessories 1
07920 Sealants and Caulking 5

DIVISION 8 - DOORS AND WINDOWS

08110 Steel Doors and Frames 3
08710 Finish Hardware 4

DIVISION 9 - FINISHES

09900 Painting 3

DIVISION 10 - SPECIALTIES

10400 Identifying Devices 3
10522 Fire Extinguishers 4

DIVISION 11 - EQUIPMENT

11000 Equipment General Provisions 3
11100 Pumps, General 4
11105 Submersible Axial Flow Pumps, Propeller and Mixed Flow 2
11420 Mechanical Screens 6

DIVISION 15 - MECHANICAL

15000 Basic Mechanical Requirements 3
15006 Ductile Iron Pipe 4
15008 PVC Non-Pressure Pipe 2
15009 PVC Pressure Pipe 6
15020 Pipe Supports 4
15030 Piping and Equipment Identification Systems 1
15095 Valves, General 5
15100 Valve Operators 3
15104 Ball Valves 2

15114 Miscellaneous Valves and Appurtenances 7
15202 Flap Gates 10
15500 Basic HVAC Requirements 6
15553 HVAC Copper and Brass Pipe 13
15598 Metallic Ductwork and Duct Accessories 5
15750 Air Conditioning Units 3
15990 HVAC Testing, Adjusting, and Balancing 7
15995 Pipeline Testing and Disinfection 7

DIVISION 16 - ELECTRICAL

16000 Basic Electrical Requirements 3
16055 Power System Studies 4
16111 Conduit 2
16118 Underground Electrical 6
16123 Low Voltage Wire and Cable 4
16130 Boxes 1
16141 Wiring Devices 5
16170 Grounding and Bonding 3
16190 Supporting Devices 2
16195 Electrical - Identification 7
16426 Low Voltage Switchboards 10
16440 Safety Switches 6
16461 Dry Type Distribution Transformers 13
16470 Panelboards 5
16476 Enclosed Circuit Breakers 3
16480 Low Voltage Electric Motors 7
16481 Individual Motor Controllers 13
16496 Automatic Transfer Switch 5
16500 Lighting 3
16620 Packaged Engine Generator Systems 7
16670 Lighting Protection Systems 5
16902 Electric Controls and Relays 3

DIVISION 17 - INSTRUMENTATION

02080 Control and Information System Scope and General Requirements 3
02200 Preliminary Design Review 4
02220 Control and Information System Submittals 2
02240 Control and Information System Training Requirements 6
02250 Tools, Supplies, and Spare Parts – General 4
02260 Signal Coordination Requirements 1
02315 Control and Information System Testing – General 5
02316 Factory Acceptance Test 3
02319 Field Testing 2
02320 Final Acceptance Test 7
02340 Quality Assurance 10
02371 Control and Information System Hardware – General 6
02500 Programmable Logic Controllers 13
02502 Operator Interface Units 5

02509	Cellular Communications System	3
02518	Mobile Workstation Computers	7
02080	Networks	7
02200	Uninterruptible Power Systems	4
02220	Enclosures, General	2
02240	Cabinets and Panels	6
02250	Panel Instruments and Accessories	4
02260	Surge Protection Devices	1
02315	Unpowered Instruments, General	5
02316	Level Switches (Suspended Float Type)	3
02319	Instrumentation and Control System Accessories	2
02320	Powered Instruments, General	7
02340	Radar Level Measurement Systems	10
02371	Instrument Schedule	6
02500	Control System Input/Output Schedule	13
02502	Functional Control Descriptions	5

Exhibits

A-Geotechnical Services Report by RADISE International dated August 1, 2018

B-EPA Federal Requirement Guide October 2021

Note: **The following documents are available electronically for completion and must be returned with your bid along with your bid security, proof of insurance, and proof of required licenses/certifications.**

CITB Questionnaire Sheet
CITB Trench Safety
Non-Collusion Statement
Non-Discrimination Certification Form
Contract Payment Method
Construction Bid Certification Page

INVITATION TO BID

Sealed bids will be received electronically until **2:00 p.m.**, local time, on **Thursday August 18th, 2022,** and opened online immediately thereafter in the 5th Floor Conference Room, City Hall, 100 North Andrews Avenue, Fort Lauderdale, Florida 33301, for **BID NO., 12712-123, PROJECT NO., 12745, River Oaks Pumpstations**

All openings will be held on the BIDSYNC.COM platform. Once the Procurement Specialist opens the solicitation, the bid tabulations may be viewed immediately on a computer, laptop, cell phone, or any other device with WiFi access. The opening may also be viewed in real time through a "Microsoft Teams" or similar type platform by using the following information:

Topic: River Oaks Pumpstations opening
Time: Aug 18, 2022 02:00 PM Eastern Time (US and Canada)

Microsoft Teams meeting

Join on your computer or mobile app
Click here to join the meeting
Or join by entering a meeting ID
Meeting ID: 258 798 875 799
Passcode: kSaJwU
Or call in (audio only)
+1 954-686-7296,,605655449# United States, Fort Lauderdale
Phone Conference ID: 605 655 449#
Find a local number | Reset PIN

Anyone requesting assistance or having further inquiry in this matter must contact the Procurement Specialist indicated on the solicitation, via the Question and Answer (Q&A) platform on Bidsync.com before the Last Day for Questions indicated in the Solicitation.

The project is located at the River Oaks Preserve located at the River Oaks Preserve (2117 SW 19 Ave), in the City of Fort Lauderdale. The work to be accomplished under this contract includes, but is not limited to, installation of wet well, effluent boxes, intake structures, chain link fence installation, waterline connections, sheet pile installation, concrete piling installation, landscaping & pavement restoration, handrail installation, pump station instrumentation installation, mechanical, electrical and plumbing infrastructure installation, generator and transformer pad work and Maintenance of Traffic (MOT).

Drawing Plans: This Project consists of Drawing File No., 4-142-97, 85 sheets. Drawing plans may be obtained **free of charge** at BIDSYNC.COM.

Licensing Requirements: Contractor should either be a Certified Underground Contractor (CUC) or a Certified General Contractor (CGC).

NOTE: Payment on this contract will be made by Visa or MasterCard.

Pre-Bid Meeting/Site visit: A pre-bid meeting and/or site visit will be held on Wednesday July 20, 10:00am, in real time through a "Microsoft Teams" or similar type platform by using the following information:

Microsoft Teams meeting

Join on your computer or mobile app
Click here to join the meeting
Or join by entering a meeting ID
Meeting ID: 226 525 179 834
Passcode: 5ufYZj
Or call in (audio only)
+1 954-686-7296,,837797264# United States, Fort Lauderdale
Phone Conference ID: 837 797 264#
Find a local number | Reset PIN

While attendance is not mandatory, it is strongly suggested that all contractors attend the pre-proposal conference. It will be the sole responsibility of the bidder to inspect the City's location and become familiar with the scope of the City's requirements and systems prior to submitting a proposal. No variation in price or conditions shall be permitted based upon a claim of ignorance. Submission of a proposal will be considered evidence that the proposer has familiarized himself with the nature and extent of the work, equipment, materials, and labor required.

Bid Security: A certified check, cashier's check, bank officer's check or bid bond for **FIVE** percent **(5%)** of the bid amount, made payable to the City of Fort Lauderdale, Florida, shall accompany each offer.

Bid Bonds:

Bidders can submit bid bonds for projects **four** different ways.

1) BidSync allows bidders to submit bid bonds electronically directly through their system using **Surety 2000**. For more information on this feature and to access it, contact BIDSYNC customer care department.

2) Bidders may **upload** their original executed bid bond on BIDSYNC to accompany their electronic bids and deliver the original, signed and sealed hard copy within **five (5)** business days after bid opening, with the company name, bid number and title clearly indicated.

3) Bidders can **hand deliver** their bid bond in a sealed envelope to the Finance Department, Procurement Services Division, 100 North Andrews Avenue, Room 619, Fort Lauderdale, Florida 33301-1016, before time of bid opening, with the company name, bid number and title clearly indicated on the envelope.

4) Bidders can **mail** their bid bond to the Finance Department, Procurement Services Division, 100 North Andrews Avenue, Room 619, Fort Lauderdale, Florida 33301-1016, before time of bid opening, with the

company name, bid number and title clearly indicated on the envelope. NOTE: Bond must be received in Procurement and time stamped before bid opening.

It will be the sole responsibility of the bidder to ensure that his bid is submitted prior to the bid opening date and time listed. **PAPER BID SUBMITTALS WILL NOT BE ACCEPTED. BIDS MUST BE SUBMITTED ELECTRONICALLY VIA BIDSYNC.COM**

Certified Checks, Cashier's Checks and Bank Drafts:
These **CANNOT** be submitted via BIDSYNC, nor are their images allowed to be uploaded and submitted with your electronic bid. These forms of securities, as well as hard copy bid bonds, must be received on or before the Invitation to Bid (ITB) opening date and time, at the Finance Department, Procurement Services Division, 100 North Andrews Avenue, Room 619, Fort Lauderdale, Florida 33301-1016, with the bid number and title clearly indicated on the envelope.

It is the bidder's sole responsibility to ensure that his bid bond or other bid security is received by the Procurement Services Division before time of bid opening. Failure to adhere to this requirement may be grounds to consider the bid as non-responsive.

The City of Fort Lauderdale reserves the right to waive any informality in any or all bids and to reject any or all bids.For information concerning technical specifications, please utilize the Q&A platform provided by BIDSYNC at www.bidsync.com. Questions of a material nature must be received prior to the cut-off date specified in the solicitation. Material changes, if any, to the scope of services or bidding procedures, will only be transmitted by written addendum. (See addendum section of BIDSYNC Site). **Bidders please note:** No part of your bid can be submitted via FAX. No variation in price or conditions shall be permitted based upon a claim of ignorance. Submission of a bid will be considered evidence that the bidder has familiarized himself with the nature and extent of the work, equipment, materials, and labor required. The entire bid response must be submitted in accordance with all specifications contained in this solicitation.

Information on bid results and projects currently out to bid can be obtained on the City's website – https://www.fortlauderdale.gov/government/departments-a-h/finance/procurement-services
For general inquiries, please call (954) 828-5933.

INSTRUCTIONS TO BIDDERS

The following instructions are given for the purpose of guiding bidders in properly preparing their bids or proposals. These directions have equal force and weight with the specifications, and strict compliance is required with all of these provisions.

QUALIFICATIONS OF BIDDERS – No proposal will be accepted from, nor will any contract be awarded to, any person who is in arrears to the City of Fort Lauderdale, upon any debt or contract, or who has defaulted, as surety or otherwise, upon any obligation to the City, or who is deemed irresponsible or unreliable by the City Commission of Fort Lauderdale.

CONCERNING SUB-CONTRACTORS, SUPPLIERS, AND OTHERS - The amount of work that is sublet by the Bidder shall be limited by the condition that the Bidder shall, with his own organization, perform at least forty percent (40%) of the total dollar amount of the Work to be performed under the Agreement.

PERSONAL INVESTIGATION - Bidders shall satisfy themselves by personal investigation, and by such other means as they may think necessary or desirable, as to the conditions affecting the proposed work and the cost. No information derived from maps, plans, specifications, or from the Engineer, City Manager, or their assistants shall relieve the Contractor from any risk or from fulfilling all terms of the contract.

INCONSISTENCIES – Any seeming inconsistency between different provisions of the plans, specifications, proposal or contract, or any point requiring explanation must be inquired by the bidder, in writing, at least ten (10) days prior to the time set for opening proposals. After proposals are opened, the bidders shall abide by the decision of the Engineer as to such interpretation.

ADDENDA AND INTERPRETATIONS - No interpretations of the meaning of the plans, specifications or other contract documents will be made orally to any bidder. Prospective bidders must request such interpretation in writing as instructed in the bid package. To be considered, such request must be received by the Questions and Answers deadline as indicated in BIDSYNC.COM. Material changes, if any, to the scope of services or bidding procedures will only be transmitted by written addendum. **It is the bidder's responsibility to verify if addenda have been issued in BIDSYNC.COM.** Failure of any bidder to receive any such addenda or interpretation shall not relieve any bidder from any obligation under his bid as submitted. All addenda so issued shall become a part of the contract document. **Bidder** shall verify **in BIDSYNC.COM** that he has all addenda before submitting a bid.

LEGAL CONDITIONS - Bidders are notified to familiarize themselves with the provisions of the laws of the State of Florida relating to hours of labor on municipal work, and with the provisions of the laws of the State of Florida and the Charter and the ordinances of the City of Fort Lauderdale.

PUBLIC ENTITY CRIMES - A person or affiliate who has been placed on the convicted vendor list following a conviction for a public entity crime may not submit a bid on a contract to provide any goods or services to a public entity, may not submit a bid on a contract with a public entity for the construction or repair of a public building or public work, may not submit bids on leases of real property to a public entity, may not be awarded or perform work as a contractor, supplier, subcontractor, or consultant under a contract with any public entity, and may not transact business with any public entity in excess of the threshold amount provided in Section 287.017, Florida Statutes, for Category Two for a period of thirty-six (36) months from the date of being placed on

the convicted vendor list FORMS OF PROPOSALS - Each proposal and its accompanying statements must be made on the blanks provided. THE FORMS MUST BE SUBMITTED ELECTRONICALLY, IN GOOD ORDER WITH ALL BLANKS COMPLETED, and must show the name of the bidder and a statement as to its contents.

The proposal must be signed by one duly authorized to do so, and in case signed by a deputy or subordinate, the principal's properly written authority to such deputy or subordinate must accompany the proposal. No proposal will be accepted, for any reason whatsoever, which is not submitted to the City as stated above, within the specified time.

INSURANCE - Contractor shall provide and shall require all of its sub-contractors to provide, pay for, and maintain in force at all times during the term of the Agreement, such insurance, including Property Insurance (Builder's Risk), Commercial General Liability Insurance, Business Automobile Liability Insurance, Workers' Compensation Insurance, Employer's Liability Insurance, and Umbrella/Excess Liability, as stated below. Such policy or policies shall be issued by companies authorized to do business in the State of Florida and having agents upon whom service of process may be made in the State of Florida.

BID BOND - A certified check, cashier's check or bank officer's check made payable to the City of Fort Lauderdale, or a bid bond in favor of the City of Fort Lauderdale shall accompany each bid as evidence of the good faith and responsibility of the bidder. The amount of the check or bond shall be retained by the City as liquidated damages in the event the bidder whose bid is accepted refuses to or fails to enter into a contract for the execution of the work solicited in this Invitation to Bid.

The bid bond or check shall be a guarantee that the successful bidder will promptly execute a contract satisfactory to the City for the work solicited in this Invitation to Bid and furnish good and sufficient bonds.

Following the full execution of a contract for the work solicited in this Invitation to Bid and the successful bidder's provision of good and sufficient bonds, in the event bid security was provided by check, the amount of the bid security accompanying the successful bidder's bid will be refunded to the successful bidder, or in the event bid security was provided by a bond, the bond accompanying the successful bidder's bid will be returned to the successful bidder. In the event the successful bidder fails to enter into, execute, and deliver a contract and furnish the required bonds within ten (10) days after the City provides notice to the successful bidder to deliver the executed contract and the required bonds, the bid bond shall immediately be payable to the City of Fort Lauderdale, or in the case of a check, the City shall retain the amount of the check, as liquidated damages. The City's retention of such amount shall not be construed as a penalty or forfeiture

FILLING IN BIDS - All prices must be electronically submitted in the proposal pages, and all proposals must fully cover all items for which proposals are asked and no other. Where more than one person is interested, it is required that all persons interested or their legal representative make all verification and subscribe to the proposal.

PRICES QUOTED: Deduct any discount offered and quote firm net unit prices. In the case of a discrepancy in computing the amount of the bid, the unit price quoted will govern. All prices quoted shall be F.O.B. destination, freight prepaid (Bidder pays and bears freight charges, Bidder owns goods in transit and files any claims), unless otherwise stated in Special Conditions. Each item

must be bid separately. No attempt shall be made to tie any item or items contained in the ITB with any other business with the City.

BIDS FIRM FOR ACCEPTANCE: Bidder warrants, by virtue of bidding, that his bid and the prices quoted in his bid will be firm for acceptance by the City for a period of one hundred and twenty (120) days from the date of bid opening unless otherwise stated in the ITB. The City shall award contract within this time period or shall request to the recommended awarded vendor an extension to hold pricing, until products/services have been awarded.

ADDITIONAL ITEMS OR SERVICES: The City may require additional items or services of a similar nature, but not specifically listed in the contract. The Contractor agrees to provide such items or services, and shall provide the City prices on such additional items or services. If the price(s) offered are not acceptable to the City, and the situation cannot be resolved to the satisfaction of the City, the City reserves the right to procure those items or services from other vendors, or to cancel the contract upon giving the Contractor thirty (30) days written notice.

DELETION OR MODIFICATION OF SERVICES: The City reserves the right to delete any portion of the Contract at any time without cause, and if such right is exercised by the City, the total fee shall be reduced in the same ratio as the estimated cost of the work deleted bears to the estimated cost of the work originally planned. If work has already been accomplished on the portion of the Contract to be deleted, the Contractor shall be paid for the deleted portion on the basis of the estimated percentage of completion of such portion.

If the Contractor and the City agree on modifications or revisions to the task elements, after the City has approved work to begin on a particular task or project, and a budget has been established for that task or project, the Contractor will submit a revised budget to the City for approval prior to proceeding with the work.

CANCELLATION FOR UNAPPROPRIATED FUNDS**:** The obligation of the City for payment to a Contractor is limited to the availability of funds appropriated in a current fiscal period, and continuation of the contract into a subsequent fiscal period is subject to appropriation of funds, unless otherwise authorized by law.

CAUSES FOR REJECTION - No proposal will be canvassed, considered or accepted which, in the opinion of the City Commission, is informal or unbalanced, or contains inadequate or unreasonable prices for any items; each item must carry its own proportion of the cost as nearly as is practicable. Any alteration, erasure, interlineation, or failure to specify bids for all items called for in the schedule shall render the proposal informal.

REJECTION OF BIDS - The City reserves the right to reject any bid if the evidence submitted by the bidder, or if the investigation of such bidder, fails to satisfy the City that such bidder is properly qualified to carry out the obligations and to complete the work contemplated. Any or all proposals will be rejected, if there is reason to believe that collusion exists among bidders. A proposal will be considered irregular and may be rejected, if it shows serious omissions, alterations in form, additions not called for, conditions or unauthorized alternates, or irregularities of any kind. The City reserves the right to reject any or all proposals and to waive such technical errors as may be deemed best for the interests of the City.

BID PROTEST PROCEDURE: Any proposer or bidder who is not recommended for award of a contract and who alleges a failure by the City to follow the City's procurement ordinance or any applicable law may protest to the Procurement Division – Deputy Director of Finance, by

delivering a letter of protest within five (5) days after a Notice of Intent to award is posted on the City's website at the following link: https://www.fortlauderdale.gov/government/departments-a-h/finance/procurement-services/notices-of-intent-to-award

The complete protest ordinance may be found on the City's website at the following link: https://library.municode.com/fl/fort_lauderdale/codes/code_of_ordinances?nodeId=COOR_CH2AD_ARTVFI_DIV2PR_S2-182DIREPRAWINAW

WITHDRAWALS - Any bidder may, without prejudice to himself, withdraw his proposal at any time prior to the expiration of the time during which proposals may be submitted. Such request for withdrawal must be in writing and signed in the same manner and by the same person who signed the proposal. After expiration of the period for receiving proposals, no proposal can be withdrawn, modified, or explained.

CONTRACT - The bidder to whom award is made shall execute a written contract to do the work and maintain the same in good repair until final acceptance by the proper authorities, and shall furnish good and sufficient bonds as specified within ten (10) days after receiving such contract for execution. If the bidder to whom the first award is made fails to enter into a contract as provided, the award may be annulled and the contract let to the next lowest bidder who is reliable, responsible, and responsive in the opinion of the City Commission, and that bidder shall fulfill every stipulation and obligation as if such bidder were the original party to whom award was made.

The contract shall provide that the Contractor agrees to correct any defective or faulty work or material, which may appear within one (1) year after completion of the work and receipt of final payment.

ENFORCEMENT OF SPECIFICATIONS - Copies of the specifications will be placed in the hands of all the assistants to the Engineer and Inspectors employed on the Work, who shall enforce each and every requirement of the contract. Such assistants shall have no authority to vary from such requirements.

DRAWING PLANS - Drawing plans may be obtained **free of charge** at BIDSYNC.COM.

SURETY BOND – The Contractor shall execute and record in the public records of Broward County, Florida, a payment and performance bond in an amount at least equal to the Contract Price with a surety insurer authorized to do business in the State of Florida as surety, ("Bond"), in accordance with Section 255.05, Florida Statutes (2021), as may be amended or revised, as security for the faithful performance and payment of all of the Contractor's obligations under the Contract Documents.

The successful bidder shall furnish a performance and payment bond in compliance with Section 255.05, Florida Statutes (2021), written by a Corporate Surety company, holding a Certificate of Authority from the Secretary of the Treasury of the United States as acceptable sureties on federal bonds, in an amount equal to the total amount payable by the terms of the contract, executed and issued by a Resident Agent licensed by and having an office in the State of Florida, representing such Corporate Surety, conditioned for the due and faithful performance of the work, and providing in addition to all other conditions, that if the Contractor, or his or its subcontractors, fail to duly pay for any labor, materials, or other supplies used or consumed by such Contractor, or his or its subcontractor or subcontractors, in performance of the work contracted to be done, the Surety will pay the same in the amount not exceeding the sum provided in such bonds, together with interest at the rate of fifteen percent (15%) per annum, and that they shall indemnify and hold

harmless the City of Fort Lauderdale to the extent of any and all payments in connection with carrying out of the contract, which the City may be required to make under the law

The Contractor is required at all times to have a valid surety bond in force covering the work being performed. A failure to have such bond in force at any time shall constitute a default on the part of the Contractor. A bond written by a surety, which becomes disqualified to do business in the State of Florida, shall automatically constitute a failure on the part of the Contractor to meet the above requirements.

Such bond shall continue in effect for one (1) year after completion and acceptance of the work with liability equal to at least twenty-five percent (25%) of contract price, or an additional bond shall be conditioned that the Contractor will correct any defective or faulty work or material which appear within one (1) year after completion of the contract, upon notification by the City, except in contracts which are concerned solely with demolition work, in which cases twenty-five percent (25%) liability will not be applicable.

AUDIT OF CONTRACTOR'S RECORDS - Upon execution of the Contract, the City reserves the right to conduct any necessary audit of the Contractor's records. Such an audit, or audits, may be conducted by the City or its representatives at any time prior to final payment, or thereafter, for a period up to three (3) years. The City may also require submittal of the records from either the Contractor, the Subcontractor, or both. For the purpose of this Section, records shall include all books of account, supporting documents and papers deemed necessary by the City to assure compliance with the contract provisions.

Failure of the Contractor or Subcontractor to comply with these requirements may result in disqualification or suspension from bidding for future contracts or disapproval as a Subcontractor at the option of the City.

The Contractor shall assure that each of its Subcontractors will provide access to its records pertaining to the project upon request by the City.

PERIODIC ESTIMATE FOR PARTIAL PAYMENT - After the Contractor has submitted a periodic estimate for partial payment, approved and certified by the Public Works Department, the City shall make payment in the manner provided in the Contract Documents and in accordance with Florida's Prompt Payment Act, Section 218, Florida Statutes.

RESERVATION FOR AWARD AND REJECTION OF BIDS - The City reserves the right to accept or reject any or all bids, part of bids, and to waive minor irregularities or variations to specifications contained in bids, and minor irregularities in the bidding process. The City also reserves the right to award the contract on a split order basis, lump sum basis, individual item basis, or such combination as shall best serve the interest of the City. The City reserves the right to make an award to the responsive and responsible bidder whose product or service meets the terms, conditions, and specifications of the ITB and whose bid is considered to best serve the City's interest. In determining the responsiveness of the offer and the responsibility of the Bidder, the following shall be considered when applicable: the ability, capacity and skill of the Bidder to perform as required; whether the Bidder can perform promptly, or within the time specified, without delay or interference; the character, integrity, reputation, judgment, experience and efficiency of the Bidder; the quality of past performance by the Bidder; the previous and existing compliance by the Bidder with related laws and ordinances; the sufficiency of the Bidder's financial resources; the availability, quality and adaptability of the Bidder's supplies or services to the required use;

the ability of the Bidder to provide future maintenance, service or parts; the number and scope of conditions attached to the bid.

LOCAL BUSINESS PREFERENCE **-** Section 2-186, Code of Ordinances of the City of Fort Lauderdale, provides for a local business preference. In order to be considered for a local business preference, a proposer must include the Local Business Preference Certification Statement of this ITB, as applicable to the local business preference class claimed at the time of Proposal submittal:

Upon formal request of the City, based on the application of a Local Business Preference, the Proposer shall, within ten (10) calendar days, submit the following documentation to the Local Business Preference Class claimed:

a. Copy of City of Fort Lauderdale current year business tax receipt, or Broward County current year business tax receipt, and

b. List of the names of all employees of the proposer and evidence of employees' residence within the geographic bounds of the City of Fort Lauderdale or Broward County, as the case may be, such as current Florida driver license, residential utility bill (water, electric, telephone, cable television), or other type of similar documentation acceptable to the City.

Failure to comply at time of proposal submittal shall result in the Proposer being found ineligible for the local business preference.

Definitions:

a. The term "Class A business" shall mean any business that has established and agrees to maintain a permanent place of business located in a non-residential zone, staffed with full-time employees within the limits of the city, and shall maintain a staffing level for the proposed work of at least fifty percent (50%) who are residents of the City of Fort Lauderdale.

b. The term "Class B business" shall mean any business that has established and agrees to maintain a permanent place of business located in a non-residential zone, staffed with full-time employees within the limits of the city, or shall maintain a staffing level for the proposed work of at least fifty percent (50%) who are residents of the City of Fort Lauderdale.

c. The term "Class C business" shall mean any business that has established and agrees to maintain a permanent place of business located in a non-residential zone, staffed with full-time employees within the limits of Broward County.

c. The term "Class D business" shall mean any business that does not qualify as a Class A, Class B, or Class C business.

The complete local business preference ordinance may be found on the City's web site at the following link:
https://library.municode.com/fl/fort_lauderdale/codes/code_of_ordinances?nodeId=COOR_CH2AD_ARTVFI_DIV2PR_S2-186LOBUPR

DISADVANTAGED BUSINESS ENTERPRISE PREFERENCE - Section 2-185, Code of Ordinances of the City of Fort Lauderdale, provides for a disadvantaged business preference. In order to be considered for a disadvantaged business preference, a proposer must include a certification from a government agency, as applicable to the disadvantaged business preference class claimed at the time of Proposal submittal:

Upon formal request of the City, based on the application of a Disadvantaged Business Preference the Proposer shall within ten (10) calendar days submit the following documentation to the Disadvantaged Business Enterprise Preference Class claimed:

a. Copy of City of Fort Lauderdale current year business tax receipt, or the Tri-County (Broward, Dade, West Palm Beach) current year business tax receipt, or proof of active Sunbiz status andb. List of the names of all employees of the proposer and evidence of employees' residence within the geographic bounds of the City of Fort Lauderdale or the Tri- County, as the case may be, such as current Florida driver license, residential utility bill (water, electric, telephone, cable television), or other type of similar documentation acceptable to the City.

Failure to comply at time of proposal submittal shall result in the Proposer being found ineligible for the Disadvantaged Business Enterprise Preference business preference.

The complete Disadvantaged Business Preference ordinance may be found on the City's website at the following link: https://www.fortlauderdale.gov/home/showpublisheddocument?id=56883

DEBARRED OR SUSPENDED BIDDERS OR PROPOSERS - The bidder or proposer certifies, by submission of a response to this solicitation, that neither it nor its principals and subcontractors are presently debarred or suspended by any Federal department or agency.

LOBBYING ACTIVITIES - ALL CONTRACTORS PLEASE NOTE: Any contractor submitting a response to this solicitation must comply, if applicable, with City of Fort Lauderdale Ordinance No. C-11-42 & Resolution No. 07-101, Lobbying Activities. Copies of Ordinance No., C-11-42, and Resolution No. 07-101, may be obtained from the City Clerk's Office on the 7th Floor of City Hall, 100 N. Andrews Avenue, Fort Lauderdale, Florida 33301. The Ordinance may also be viewed on the City's website at **https://www.fortlauderdale.gov/home/showdocument?id=6036**

GENERAL CONDITIONS

Unless otherwise modified in the Project's Special Conditions, the following General Conditions shall be part of the Contract:

GC - 01 - DEFINITIONS - The following words and expressions, or pronouns used in their stead, shall wherever they appear in the Contract and the Contract Documents, be construed as follows:

"Addendum" or "Addenda" - shall mean the additional Contract provisions issued in writing, by the Engineer, prior to the receipt of bids.

"Bid" – shall mean the offer or proposal of the Bidder submitted on the prescribed form setting forth the prices for the Work to be performed.

"Bidder" – shall mean any person, firm, company, corporation or entity submitting a bid for the Work.

"Bonds" –shall mean bid, performance and payment bonds and other instruments of security, furnished by Contractor and his surety in accordance with the Contract Documents.

"City" – shall mean the City of Fort Lauderdale, Florida, a Florida municipal corporation. In the event the City exercises its regulatory authority as a government body, the exercise of such regulatory authority and the enforcement of any rules, regulations, codes, laws and ordinances shall be deemed to have occurred pursuant to City's authority as a governmental body and shall not be attributable in any manner to the City as a party to this Contract.

"Consultant" – shall mean a person, firm, company, corporation or other entity employed by the City to perform the professional services for the project.

"Contractor" – shall mean the successful Bidder who has been employed by the City to perform the construction and related services for the project.

"Contract Work" - shall mean everything expressed or implied to be required to be furnished and furnished by the Contractor by any one or more of the parts of the Contract Documents referred to in the Contract hereof. In the case of any inconsistency in or between any parts of this Contract, the Project Manager shall determine which shall prevail.

"Design Documents" – shall mean the construction plans and specifications included as part of a Bid/Proposal Solicitation prepared either by the City or by the Consultant under a separate Agreement with the City.

"Engineer" - shall include the terms "professional engineer" and "licensed engineer" and means a person who is licensed to engage in the practice of engineering under Florida Statute, Chapter 471. An Engineer may be a City employee or a consultant hired by the City.

"Extra Work" - shall mean work other than that required by the Contract.

"Inspector" – shall mean an authorized representative of the City assigned to make necessary inspections of materials furnished by Contractor and of the Work performed by Contractor.

"Notice" - shall mean written notice sent by certified United States mail, return receipt requested, or sent by commercial express carrier with acknowledgement of delivery, or via fax or email, or by hand delivery with a request for a written receipt of acknowledgment of delivery and shall be served upon the Contractor either personally or to its place of business listed in the Bid.

“Owner” - shall mean the City of Fort Lauderdale.

“Project Manager” - shall mean a professional designated by the City to manage the Project under the supervision and direction of the Public Works Director or designee.

"Public Works Director" – shall mean the Public Works Director of the City of Fort Lauderdale.

"Site" - shall mean the area upon or in which the Contractor's operations are carried out and such other areas adjacent thereto as may be designated as such by the Project Manager.

"Sub-contractor" - shall mean any person, firm, company, corporation or other entity, other than employees of the Contractor, who or which contracts with the contractor, to furnish, or actually furnishes labor and materials, or labor and equipment, or labor, materials and equipment at the site.

"Surety" - shall mean any corporation or entity that executes, as Surety, the Contractor's performance and payment bond securing the performance of this Contract.

GC - 02 - SITE INVESTIGATION AND REPRESENTATION - The Contractor acknowledges that it has satisfied itself as to the nature and location of the Work under the Contract Documents, the general and local conditions of the Site, particularly those bearing upon availability of transportation, disposal, handling and storage of materials, availability of labor, water, electric power, and roads, field conditions, the type of equipment and facilities needed preliminary to and during the prosecution of the Work and all other matters which can in any way affect the Work or the cost thereof under the Contract Documents.

The Contractor acknowledges that it has conducted extensive tests, examinations and investigations and represents and warrants a thorough familiarization with the nature and extent of the Contract Documents, the Work, locality, soil conditions, moisture conditions and all year-round local weather and climate conditions (past and present), and, in reliance on such tests, examination and investigations conducted by Contractor and the Contractor’s experts, has determined that no conditions exist that would in any manner affect the Bid Price and that the project can be completed for the Bid Price submitted.

Any failure by the Contractor to acquaint itself with all the Site conditions shall not relieve Contractor from responsibility for properly estimating the difficulty or cost thereof under the Contract Documents.

GC - 03 - SUBSTITUTIONS - If the Contractor desires to use materials and/or products of manufacturer's names different from those specified in the Contract Documents, the Bidder requesting the substitution shall make written application as described herein. The burden of proving the equality of the proposed substitution rests on the Contractor making the request. To be acceptable, the proposed substitution shall meet or exceed all expressed requirements of the Contract Documents and shall be submitted upon the Contractor's letterhead. The following requirements shall be met in order for the substitution to be considered:

1. Requests for substitution shall be accompanied by such technical data, as the party making the request desires to submit. The Project Manager will consider reports from

reputable independent testing laboratories, verified experience records from previous users and other written information valid in the circumstances; and

2. Requests for substitution shall completely and clearly indicate in what respects the materials and/or products differ from those indicated in the Contract Documents; and

3. Requests for substitution shall be accompanied by the manufacturer's printed recommendations clearly describing the installation, use and care, as applicable, of the proposed substitutions; and

4. Requests for substitution shall be accompanied by a complete schedule of changes in the Contract Documents, if any, which must be made to permit the use of the proposed substitution.

If a proposed substitution is approved by the Project Manager, an addendum will be issued to prospective bidders not less than three (3) working days prior to the date set for opening of bids. Unless substitutions are received and approved as described above, the successful Bidder shall be responsible for furnishing materials and products in strict accordance with the Contract Documents.

GC- 04 – CONSTRUCTION RESOURCES – Contractor shall provide all labor and equipment necessary to complete the installation within a timely manner. Contractor shall provide details as to manpower and equipment to be dedicated to the project in its Work Plan. Contractor is responsible for making arrangements, obtaining and purchasing construction water services if required to complete the work.

GC - 05 - CONTROL OF THE WORK - The Project Manager shall have full control and direction of the Work in all respects. The Project Manager and/or his authorized designee(s) shall, at all times, have the right to inspect the Work and materials. The Contractor shall furnish all reasonable facilities for obtaining such information, as the Project Manager may desire respecting the quality of the Work and materials and the manner of conducting the Work. Should the Contractor be permitted to perform night Work, or to vary the period which work is ordinarily carried on in the daytime, he shall give ample notice to the Project Manager so that proper and adequate inspection may be provided. Such Work shall be done only under such regulations as are furnished in writing by the Project Manager, and no extra compensation shall be allowed to the Contractor therefore. In the event of night work, the Contractor shall furnish such light, satisfactory to the Project Manager, as will ensure proper inspection. Nothing herein contained shall relieve the Contractor from compliance with any and all City ordinances relating to noise or Work during prohibited hours.

GC - 06 - SUB-CONTRACTOR - The Contractor shall not sublet, in whole or any part of the Work without the written consent and approval of the Project Manager. Within ten (10) days after official notification of starting date, the Contractor must submit in writing, to the Project Manager, a list of all Sub-contractors. No Work shall be done by any sub-contractor until such Sub-contractor has been officially approved by the Project Manager. A sub-contractor not appearing on the original list will not be approved without written request submitted to the Project Manager and approved by the Public Works Director. In all cases, the Contractor shall give his personal attention to the Work of the Sub-contractors and the Sub-contractor is liable to be discharged by the Contractor, at the direction of the Project Manager, for neglect of duty, incompetence or misconduct.

Acceptance of any sub-contractor, other person, or organization by the Project Manager shall not constitute a waiver of any right of Project Manager to reject defective Work or Work not in conformance with the Contract Documents.

Contractor shall be fully responsible for all acts and omissions of its Sub-contractors and of persons and organizations directly or indirectly employed by them and of persons and organizations for whose acts any of them may be liable to the same extent that he is responsible for the acts and omissions of persons directly employed by him. Nothing in the Contract Documents shall create any contractual relationship between City and any sub-contractor or other person or organization having a direct contract with Contractor, nor shall it create any obligation on the part of City to pay or to see to the payment of any moneys due to any sub-contractor or other person, or organization, except as may otherwise be required by law.

GC - 07 - QUANTITIES - Contractor recognizes and agrees that the quantities shown on plans and Bid/Price Schedule are estimates only and may vary during actual construction. No change shall be made involving any departure from the general scheme of the Work and that no such change involving a material change in cost, either to the City or Contractor, shall be made, except upon written permission of the City. However, the Project Manager shall have the right to make minor alternations in the line, grade, plan, form or materials of the Work herein contemplated any time before the completion of the same. That if such alterations shall diminish the quantity of the Work to be done, such alterations shall not constitute a claim for damages or anticipated profits. That if such alterations increase the amount of the Work to be done, such increase shall be paid for according to the quantity actually performed and at the unit price or prices stipulated therefore in the Contract. The City shall, in all cases of dispute, determine the amount or quantity of the several kinds of Work which are to be paid for under this Contract, and shall decide all questions relative to the execution of the same, and such estimates and decisions shall be final and binding.

Any Work not herein specified, which might be fairly implied as included in the Contract, of which the City shall judge, shall be done by the Contractor without extra charge. However, such cost increases shall be authorized either by the Public Works Director or designee, or the City Commission based upon the purchasing threshold amounts provided for in Chapter 2 of the City of Fort Lauderdale's Code of Ordinances.

GC - 08 - NO ORAL CHANGES - Except to the extent expressly set forth in the Contract, no change in, or modification, termination or discharge of the Contract in any form whatsoever, shall be valid or enforceable unless it is in writing and signed by the parties charged, therewith or their duly authorized representative.

GC - 09 - PERMITS AND PROTECTION OF PUBLIC – Permits on file with the City and/or those permits to be obtained by the Contractor, shall be considered directive in nature, and will be considered a part of this Contract. A copy of all permits shall be given to the City and become part of the Contract Documents. Terms of permits shall be met prior to acceptance of the Work and release of the final payment.

Contractor shall secure all permits and licenses required for completing the Project. Contractor will obtain the necessary State, County, and City construction/work permits if required.

The Contractor shall comply with all applicable Codes, Standards, Specifications, etc. related to all aspects of the Project.

Where there are telephones, light or power poles, water mains, conduits, pipes or drains or other construction, either public or private, in or on the streets or alleys, the Work shall be so conducted that no interruption or delay will be caused in the operation or use of the same. Proper written notice shall be given to all affected parties prior to proceeding with the Work.

The Contractor shall not be permitted to interfere with public travel and convenience by grading or tearing up streets indiscriminately, but the Work of constructing the various items in this contract shall proceed in an orderly, systematic and progressive manner.

GC - 10 - DISEASE REGULATIONS - The Contractor shall enforce all sanitary regulations and take all precautions against infectious diseases as the Project Manager may deem necessary. Should any infectious or contagious diseases occur among his employees, he shall arrange for the immediate removal of the employee from the Site and isolation of all persons connected with the Work.

GC - 11 - CONTRACTOR TO CHECK PLANS, SPECIFICATIONS, AND DATA - The Contractor shall verify all dimensions, quantities, and details shown on the plans, supplementary drawings, schedules, and shall notify the Project Manager of all errors, omissions, conflicts and discrepancies found therein within three (3) working days of discovery. Failure to discover or correct errors, conflictions, or discrepancies shall not relieve the Contractor of full responsibility for unsatisfactory Work, faulty construction, or improper operation resulting therefrom nor from rectifying such condition at its own expense.

GC - 12 - MATERIALS AND WORKMANSHIP - All material shall be new and the workmanship shall, in every respect, be in conformity with approved modern practice and with prevailing standards of performance and quality. In the event of a dispute, the Project Manager's decision shall be final. Wherever the Plans, Specifications, Contract Documents, or the directions of the Project Manager are unclear as to what is permissible and/or fail to note the quality of any Work, that interpretation will be made by the Project Manager, which is in accordance with approved modern practice, to meet the particular requirements of the Contract.

GC - 13 - SAFEGUARDING MARKS - The Contractor shall safeguard all points, stakes, grade marks, monuments, and benchmarks made or established on the Work, bear the cost of re-establishing same if disturbed, or bear the entire expense of rectifying Work improperly installed due to not maintaining or protecting or for removing without authorization, such established points, stakes and marks. The Contractor shall safeguard all existing and known property corners, monuments and marks not related to the Work and, if required, shall bear the cost of having them re-established by a licensed Professional surveyor registered in the State of Florida if disturbed or destroyed during the course of construction.

GC - 14 - RESTROOM FACILITIES - Contractor shall provide portable toilet facilities for employee's use at a location within the Work site to be determined by the City.

GC - 15 - PROGRESS MEETINGS - Weekly Status meetings will be conducted with representatives from the City and the Contractor. Contractor shall budget time to participate in such meetings. A well-run Project should result in short meetings.

GC - 16 - ISSUE RESOLUTION - Should Contractor become engaged in a dispute with a resident or a City employee, the Contractor shall report the situation to the Project Manager immediately. It shall be mandatory that the City participate in any dispute resolution. Failure of Contractor personnel to notify the City shall obligate Contractor to replace the offending employee immediately if requested by the City.

GC - 17 - CITY SECURITY-CONTRACTOR AND SUBCONTRACTOR EMPLOYEE INFORMATION - Prior to commencing work, Contractor shall provide to the City a list of all personnel and sub-contractors on site. The list will include the name, address, birth date and driver's license number for all personnel. All personnel and subcontractors on site will have on their person a company

photo ID during all stages of the construction. Contractor shall provide standard required personal information per current City procedures.

GC - 18 - POST-CONSTRUCTION SURVEY - The Contractor shall provide as-built survey, sealed and signed by a registered surveyor in the State of Florida, as a condition of final payment.

GC – 19 - KEY PERSONNEL - Contractor shall provide as part of the Work Plan, resumes for all key project personnel providing supervision and project management functions. Resumes shall include work history and years of experience performing this type of work.

GC - 20 - EXISTING UTILITY SERVICE - All existing utility service shall be maintained with a minimum of interruption at the expense of the Contractor.

GC - 21 - JOB DESCRIPTION SIGNS – Contractor, at Contractor's expense, shall furnish, erect, and maintain suitable weatherproof signs on jobs over $100,000 containing the following information:

1. City Seal (in colors)
2. Project or Improvement Number
3. Job Description
4. Estimated Cost
5. Completion Date

Minimum size of sign shall be four feet high, eight feet wide and shall be suitably anchored. The entire sign shall be painted and present a pleasing appearance. Exact location of signs will be determined in the field. Two (2) signs will be required, one at each end of the job. All costs of this work shall be included in other parts of the work.

GC - 22 - FLORIDA EAST COAST RIGHT-OF-WAY - Whenever a City contractor is constructing within the Florida East Coast Railway Company's Right-of-Way, it will be mandatory that the contractor carry bodily injury and property damage insurance in amounts satisfactory to the Florida East Coast Company. This insurance requirement shall be verified by the contractor with the Florida East Coast Company prior to commencing work, and maintained during the life of the Contract.

GC - 23 - ACCIDENTS - The Contractor shall provide such equipment and facilities as are necessary and/or required, in the case of accidents, for first aide services to be provided to a person who may be injured during the project duration. The Contractor shall also comply with the OSHA requirements as defined in the United States Labor Code 29 CFR 1926.50.

In addition, the Contractor must report immediately to the Project Manager every accident to persons or damage to property, and shall furnish in writing full information, including testimony of witnesses regarding any and all accidents.

GC - 24 - SAFETY PRECAUTIONS - Contractor must adhere to the applicable environmental protection guidelines for the duration of a project. If hazardous waste materials are used, detected or generated at any time, the Project Manager must be immediately notified of each and every occurrence. The Contractor shall comply with all codes, ordinances, rules, orders and other legal requirements of public authorities (including OSHA, EPA, DERM, the City, Broward County, State of Florida, and Florida Building Code), which bear on the performance of the Work.

The Contractor shall take the responsibility to ensure that all Work is performed using adequate safeguards, including but not limited to: proper safe rigging, safety nets, fencing, scaffolding, barricades, chain link fencing, railings, barricades, steel plates, safety lights, and ladders that are necessary for the protection of its employees, as well as the public and City employees. All riggings and scaffolding shall be constructed with good sound materials, of adequate dimensions for their intended use, and substantially braced, tied or secured to ensure absolute safety for those required to use it, as well as those in the vicinity. All riggings, scaffolding, platforms, equipment guards, trenching, shoring, ladders and similar actions or equipment shall be OSHA approved, as applicable, and in accordance with all Federal, State and local regulations.

GC - 25 - DUST PREVENTION - The Contractor shall, by means of a water spray, or temporary asphalt pavement, take all necessary precautions to prevent or abate a dust nuisance arising from dry weather or Work in an incomplete stage. All costs of this Work shall be included in the cost of other parts of the Work.

Should the Contractor fail to abate a dust nuisance the Project Manager may stop the Work until the issue is resolved to the City's satisfaction.

GC - 26 - SITE CLEANUP AND RESTORATION – The Contractor shall remove all debris and unused or discarded materials from the work site daily. Contractor shall clean the work site to remove all directional drilling "Driller's Mud" materials. No "Driller's Mud" residue shall be allowed to remain in the soil or on the surface of the land or vegetation. All debris and drilling materials must be disposed of offsite at an approved location.

The Contractor shall promptly restore all areas disturbed that are outside the Project limits in equal or better condition at no additional cost to the City.

GC - 27 - COURTEOUS BEHAVIOR AND RESPECT FOR RESIDENTS AND PROPERTY – The Contractor and its employees, associates and sub-contractors shall maintain courteous behavior at all times and not engage in yelling, loud music, or other such activities. Contractor's employees shall not leave trash or other discarded items at the Work Site, especially on any private property. In the event complaints arise, Contractor shall immediately remove such offending employees from the project if requested to do so by the Project Manager. Contractor's employees shall not trespass on any private property unless necessary to complete the work but with prior permission from the owner.

Contractor shall notify and obtain permission from the residents 24 hours in advance when planning to work within the resident's property. In addition, Contractor shall notify the resident prior to entering their property to perform work or inspect/investigate the work site. Contractor shall not block residents' driveways unnecessarily. Contractor shall not park equipment on landscaped areas when the vehicle is not needed for the current construction activities. Contractor shall be responsible for repair and/or replacement of all damaged landscaping within 48 hours including repairing vehicle wheel impressions, irrigation systems, lighting systems, structures, or any other items of resident's property. Contractor shall not destroy, damage, remove, or otherwise negatively impact any landscaping within or outside the right-of-way without prior approval from the Project Manager.

GC - 28 - PLACING BARRICADES AND WARNING LIGHTS - The Contractor shall furnish and place, at Contractor's own expense, all barricades, warning lights, automatic blinker lights and such devices necessary to properly protect the work and vehicular and pedestrian traffic. Should the Contractor fail to erect or maintain such barricades, warning lights, etc., the Project Manager may, after 24 hours' notice to the Contractor, proceed to have such barricades and warning lights

placed and maintained by City or other forces and all costs incurred thereof charged to the Contractor and may be retained by the City from any monies due, or to become due, to the Contractor.

GC - 29 - TRAFFIC CONTROL - The Contractor shall coordinate all Work and obtain, through the City's Transportation and Mobility Department, Broward County, Florida Department of Transportation, as applicable, any permits required to detour traffic or close any street before starting to work in the road

All traffic control devices, flashing lights, signs and barricades shall be maintained in working condition at all times and conform to Manual of Uniform Traffic Control Devices (MUTCD), latest edition.

GC - 30 - COORDINATION - The Contractor shall notify all utilities, transportation department, etc., in writing, with a copy to the Project Manager before construction is started and shall coordinate its Work with them. The Contractor shall cooperate with the owners of any underground or overhead utility lines in their removal, construction and rearrangement operations in order that services rendered by these parties will not be unnecessarily interrupted.

The Contractor shall arrange its Work and dispose of its materials so as to not interfere with the operation of other contractors engaged upon adjacent work, and to join its Work to that of others in a proper manner, and to perform its Work in the proper sequence in relation to that of other contractors as may be directed by the Project Manager.

Each Contractor shall be responsible for any damage done by it or its agents to the work performed by another contractor.

GC - 31 - WATER - Bulk water used for construction, flushing pipelines, and testing shall be obtained from fire hydrants. Contractor shall make payment for hydrant meter at Treasury Billing Office, 1st Floor, City Hall, 100 N. Andrews Avenue. With the paid receipt, contractor can pick up hydrant meter at the utility location office. No connection shall be made to a fire hydrant without a meter connected.

GC - 32 - PROHIBITION AGAINST CONTRACTING WITH SCRUTINIZED COMPANIES - Subject to *Odebrecht Construction, Inc., v. Prasad*, 876 F.Supp.2d 1305 (S.D. Fla. 2012), *affirmed*, *Odebrecht Construction, Inc., v. Secretary, Florida Department of Transportation*, 715 F.3d 1268 (11th Cir. 2013), with regard to the "Cuba Amendment," the Contractor certifies that it is not on the Scrutinized Companies with Activities in Sudan List or the Scrutinized Companies with Activities in the Iran Petroleum Energy Sector List, and that it does not have business operations in Cuba or Syria, as provided in Section 287.135, Florida Statutes (2021), as may be amended or revised. The Contractor certifies that it is not on the Scrutinized Companies that Boycott Israel List created pursuant to Section 215.4725, Florida Statutes (2021), as may be amended or revised, and that it is not engaged in a boycott of Israel. The City may terminate this Agreement at the City's option if the Contractor is found to have submitted a false certification as provided under subsection (5) of Section 287.135, Florida Statutes (2021), as may be amended or revised, or been placed on the Scrutinized Companies with Activities in Sudan List or the Scrutinized Companies with Activities in the Iran Petroleum Energy Sector List or the Scrutinized Companies that Boycott Israel List created pursuant to Section 215.4725, Florida Statutes (2021), as may be amended or revised, or is engaged in a boycott of Israel or has been engaged in business operations in Cuba or Syria, as defined in Section 287.135, Florida Statutes (2021), as may be amended or revised.

By submitting a proposal or response, the company, principals, or owners certify that it is not listed on the Scrutinized Companies with Activities in Sudan List or listed on the Scrutinized Companies with Activities in the Iran Petroleum Energy Sector List or is engaged in business operations in Cuba or Syria.

GC - 33 - USE OF FLORIDA LUMBER TIMBER AND OTHER FOREST PRODUCTS - In accordance with Florida Statute 255.20 (3), the City specifies that lumber, timber, and other forest products used for this Project shall be produced and manufactured in the State of Florida if such products are available and their price, fitness, and quality are equal. This requirement does not apply to plywood specified for monolithic concrete forms, if the structural or service requirements for timber for a particular job cannot be supplied by native species, or if the construction is financed in whole or in part from federal funds with the requirement that there be no restrictions as to species or place of manufacture.

The Bidder affirms by submitting a bid response to this solicitation that they will comply with section 255.20 (3) Florida Statutes.

GC - 34 - PUBLIC RECORDS/TRADE SECRETS/COPYRIGHT: The Proposer's response to the Solicitation is a public record pursuant to Florida law, which is subject to disclosure by the City under the State of Florida Public Records Law, Florida Statutes Chapter 119.07 ("Public Records Law"). The City shall permit public access to all documents, papers, letters or other material submitted in connection with this Solicitation and the Contract to be executed for this Solicitation, subject to the provisions of Chapter 119.07 of the Florida Statutes.

Any language contained in the Proposer's response to the Solicitation purporting to require confidentiality of any portion of the Proposer's response to the Solicitation, except to the extent that certain information is in the City's opinion a Trade Secret pursuant to Florida law, shall be void. If a Proposer submits any documents or other information to the City which the Proposer claims is Trade Secret information and exempt from Florida Statutes Chapter 119.07 ("Public Records Laws"), the Proposer shall clearly designate that it is a Trade Secret and that it is asserting that the document or information is exempt. The Proposer must specifically identify the exemption being claimed under Florida Statutes 119.07. The City shall be the final arbiter of whether any information contained in the Proposer's response to the Solicitation constitutes a Trade Secret. The City's determination of whether an exemption applies shall be final, and the proposer agrees to defend, indemnify, and hold harmless the City and the City's officers, employees, and agent, against any loss or damages incurred by any person or entity as a result of the City's treatment of records as public records. In addition, the proposer agrees to defend, indemnify, and hold harmless the City and the City's officers, employees, and agents, against any loss or damages incurred by any person or entity as a result of the City's treatment of records as exempt from disclosure or confidential. Proposals purporting to be subject to copyright protection in full or in part will be rejected. The proposer authorizes the City to publish, copy, and reproduce any and all documents submitted to the City bearing copyright symbols or otherwise purporting to be subject to copyright protection.

EXCEPT FOR CLEARLY MARKED PORTIONS THAT ARE BONA FIDE TRADE SECRETS PURSUANT TO FLORIDA LAW, DO NOT MARK YOUR RESPONSE TO THE SOLICITATION AS PROPRIETARY OR CONFIDENTIAL. DO NOT MARK YOUR RESPONSE TO THE SOLICITATION OR ANY PART THEREOF AS COPYRIGHTED.

IF THE CONTRACTOR HAS QUESTIONS REGARDING THE APPLICATION OF CHAPTER 119, FLORIDA STATUTES, TO THE CONTRACTOR'S DUTY TO PROVIDE PUBLIC RECORDS RELATING TO THIS AGREEMENT, CONTACT THE CUSTODIAN OF PUBLIC RECORDS AT:

Telephone Number: **(954) 828-5002**

Mailing Address: **City Clerk's Office**
100 N. Andrews Avenue
Fort Lauderdale, Florida 33301-1016

E-mail: **prrcontract@fortlauderdale.gov**

Contractor shall:

1. Keep and maintain public records required by the City in order to perform the service.

2. Upon request from the City's custodian of public records, provide the City with a copy of the requested records or allow the records to be inspected or copied within a reasonable time at a cost that does not exceed the cost provided in Chapter 119, Florida Statutes (2021), as may be amended or revised, or as otherwise provided by law.

3. Ensure that public records that are exempt or confidential and exempt from public records disclosure requirements are not disclosed except as authorized by law for the duration of the contract term and following completion of this Agreement if the Contractor does not transfer the records to the City.

4. Upon completion of the Agreement, transfer, at no cost, to the City all public records in possession of the Contractor or keep and maintain public records required by the City to perform the service. If the Contractor transfers all public records to the City upon completion of this Agreement, the Contractor shall destroy any duplicate public records that are exempt or confidential and exempt from public records disclosure requirements. If the Contractor keeps and maintains public records upon completion of this Agreement, the Contractor shall meet all applicable requirements for retaining public records. All records stored electronically must be provided to the City, upon request from the City's custodian of public records, in a format that is compatible with the information technology systems of the City.

SPECIAL CONDITIONS

01. PURPOSE

The City of Fort Lauderdale, Florida (City) is seeking bids from qualified bidders, for construction services in accordance with the terms, conditions, and specifications contained in this Invitation To Bid (ITB).

02. TRANSACTION FEES

The City uses BidSync (www.bidsync.com) to distribute and receive bids and proposals. There is no charge to vendors/contractors to register and participate in the solicitation process, nor will any fees be charged to the awarded contractor.

03. SUBMISSION OF BIDS

It is the sole responsibility of the Contractor to ensure that its bid is submitted electronically through BidSync at www.bidsync.com. and that any bid security not submitted via BidSync reaches the City of Fort Lauderdale, Procurement Services Division, 6th floor, Room 619, 100 N. Andrews Avenue, Fort Lauderdale, Florida 33301-1016, in a sealed envelope marked on the outside with the ITB solicitation number and Contractor's name, no later than the time and date specified in this solicitation. **PAPER BID SUBMITTALS WILL NOT BE ACCEPTED. PLEASE SUBMIT YOUR BID RESPONSE ELECTRONICALLY.**

04. INFORMATION OR CLARIFICATION

For information concerning procedures for responding to this solicitation, contact **Fausto Vargas**, **Senior Procurement Specialist**, at (954) 828-6167 or email at fvargas@fortlauderdale.gov. Such contact shall be for clarification purposes only.

For information concerning technical specifications please utilize the Question/Answer platform provided by BidSync at www.bidsync.com. Questions of a material nature must be received prior to the cut-off date specified in the solicitation. Material changes, if any, to the scope of services or bidding procedures will only be transmitted by written addendum. (See addendum section of BidSync site). **Bidders please note**: No part of your bid can be submitted via FAX. No variation in price or conditions shall be permitted based upon a claim of ignorance. Submission of a bid will be considered evidence that the bidder has familiarized himself with the nature and extent of the work, and the equipment, materials, and labor required. The entire bid response must be submitted in accordance with all specifications contained in this solicitation. The questions and answers submitted in BidSync shall become part of any contract that is created from this ITB.

05. CONTRACT TIME

5.1 The Contractor recognizes that TIME IS OF THE ESSENCE. The Work shall commence within **20** calendar days of the date of the Notice to Proceed.

5.2 The Work shall be Substantially Completed within **450** calendar days after the date when the Contract Time commences to run as provided in the Notice to Proceed.

5.3 The Work shall be finally completed on the Final Completion Date and ready for final payment in accordance with this Agreement within **510** calendar days after the date when the Contract Time commences to run as provided in the Notice to Proceed.

06. BID SECURITY

A certified check, cashier's check, bank officer's check or bid bond for **FIVE percent (5%)** of the bid amount, made payable to the City of Fort Lauderdale, shall accompany each offer.

07. REQUIRED LICENSES/CERTIFICATIONS

Contractor must possess the following licenses/certifications to be considered for award:

Contractor should either be a Certified Underground Contractor (CUC) or a Certified General Contractor (CGC)

Note: Contractor must have proper licensing and shall submit evidence of same with its bid response.

08. SPECIFIC EXPERIENCE REQUIRED

The following expertise is required to be considered for this Contract. Specific references attesting to this expertise must be submitted with the bid response.

The contractor shall have previous construction experience in constructing of stormwater pump stations in the State of Florida within the last five (5) years. Bidder shall submit proof of construction experience for a minimum of three (3) projects of similar scope and scale (or larger) and shall, for each project listed, identify location; dates of construction; project name and overall scope; scope of work that was self-performed by Contractor; and client's name, address, telephone number and e-mail address.

NOTE: REFERENCES SHALL NOT INCLUDE ONLY CITY OF FORT LAUDERDALE EMPLOYEES OR WORK PERFORMED FOR THE CITY. THE CITY IS ALSO INTERESTED IN WORK EXPERIENCE AND REFERENCES FROM ENTITIES OTHER THAN THE CITY OF FORT LAUDERDALE.

By signing this bid solicitation, contractor is affirming that this expertise will be provided for this Contract at no additional charge.

09. BID ALLOWANCE

Allowance for permits: Payments will be made to the contractor based on the actual cost of permits upon submission of paid permit receipts. The City shall not pay for other costs related to obtaining or securing permits.
The amount indicated is intended to be sufficient to cover the entire project. If the City's permit fees exceed the allowance indicated, the City will reimburse the contractor the actual amount of the City's permit fees required for project completion.

Allowances	$
FPL, allowance	175,000.00
Undefined Conditions Allowance	200,000.00
Permit, Licenses and Fee Allowance	440,000.00
Testing Fees Allowance	25,000.00
Bypass Pumps Allowance	100,000.00
TOTAL	940,000.00

Note: The City will add this allowance to your bid.

10. INSURANCE REQUIREMENTS *(See Article 10, Bonds and Insurance, of the Contract for details)*

Insurance

As a condition precedent to the effectiveness of this Agreement, during the term of this Agreement and during any renewal or extension term of this Agreement, the Contractor, at its sole expense, shall provide insurance of such types and with such terms and limits as noted below. Providing proof of and maintaining adequate insurance coverage are material obligations of the Contractor. The Contractor shall provide the City a certificate of insurance evidencing such coverage. The Contractor's insurance coverage shall be primary insurance for all applicable policies. The limits of coverage under each policy maintained by the Contractor shall not be interpreted as limiting the Contractor's liability and obligations under this Agreement. All insurance policies shall be through insurers authorized or eligible to write policies in the State of Florida and possess an A.M. Best rating of A-, VII or better, subject to approval by the City's Risk Manager.

The coverages, limits, and/or endorsements required herein protect the interests of the City, and these coverages, limits, and/or endorsements shall in no way be relied upon by the Contractor for assessing the extent or determining appropriate types and limits of coverage to protect the Contractor against any loss exposures, whether as a result of this Agreement or otherwise. The requirements contained herein, as well as the City's review or acknowledgement, are not intended to and shall not in any manner limit or qualify the liabilities and obligations assumed by the Contractor under this Agreement.

The following insurance policies and coverages are required:

Commercial General Liability
Coverage must be afforded under a Commercial General Liability policy with limits not less than:

- $2,000,000 each occurrence and $2,000,000 aggregate for Bodily Injury, Property Damage, and Personal and Advertising Injury
- $2,000,000 each occurrence and $2,000,000 aggregate for Products and Completed Operations

Policy must include coverage for contractual liability and independent contractors.

The City, a Florida municipal corporation, its officials, employees, and volunteers are to be covered as an additional insured with a CG 20 26 04 13 Additional Insured –

Designated Person or Organization Endorsement or similar endorsement providing equal or broader Additional Insured Coverage with respect to liability arising out of activities performed by or on behalf of the Contractor. The coverage shall contain no special limitation on the scope of protection afforded to the City, its officials, employees, and volunteers.

Professional Liability
Coverage must be afforded for Wrongful Acts in an amount not less than $1,000,000 each claim and $2,000,000 aggregate.

Contractor must keep the professional liability insurance in force until the third anniversary of expiration or early termination of this Agreement or the third anniversary of acceptance of work by the City, whichever is longer, which obligation shall survive expiration or early termination of this Agreement.

Business Automobile Liability
Coverage must be afforded for all Owned, Hired, Scheduled, and Non-Owned vehicles for Bodily Injury and Property Damage in an amount not less than $1,000,000 combined single limit each accident.

If the Contractor does not own vehicles, the Contractor shall maintain coverage for Hired and Non-Owned Auto Liability, which may be satisfied by way of endorsement to the Commercial General Liability policy or separate Business Auto Liability policy.

Crane and Rigging Liability
Coverage must be afforded for any crane operations under the Commercial General or Business Automobile Liability policy as necessary, in line with the limits of the associated policy.

Workers' Compensation and Employer's Liability
Coverage must be afforded per Chapter 440, Florida Statutes. Any person or entity performing work for or on behalf of the City must provide Workers' Compensation insurance. Exceptions and exemptions will be allowed by the City's Risk Manager, if they are in accordance with Florida Statute.

The Contractor waives, and the Contractor shall ensure that the Contractor's insurance carrier waives, all subrogation rights against the City, its officials, employees, and volunteers for all losses or damages. The City requires the policy to be endorsed with WC 00 03 13 Waiver of our Right to Recover from Others or equivalent.

The Contractor must be in compliance with all applicable State and federal workers' compensation laws, including the U.S. Longshore Harbor Workers' Act and the Jones Act, if applicable.

Insurance Certificate Requirements

a. The Contractor shall provide the City with valid Certificates of Insurance (binders are unacceptable) no later than ten (10) days prior to the start of work contemplated in this Agreement.
b. The Contractor shall provide to the City a Certificate of Insurance having a thirty (30) day notice of cancellation; ten (10) days' notice if cancellation is for nonpayment of premium.

c. In the event that the insurer is unable to accommodate the cancellation notice requirement, it shall be the responsibility of the Contractor to provide the proper notice. Such notification will be in writing by registered mail, return receipt requested, and addressed to the certificate holder.
d. In the event the Agreement term or any surviving obligation of the Contractor following expiration or early termination of the Agreement goes beyond the expiration date of the insurance policy, the Contractor shall provide the City with an updated Certificate of Insurance no later than ten (10) days prior to the expiration of the insurance currently in effect. The City reserves the right to suspend the Agreement until this requirement is met.
e. The Certificate of Insurance shall indicate whether coverage is provided under a claims-made or occurrence form. If any coverage is provided on a claims-made form, the Certificate of Insurance must show a retroactive date, which shall be the effective date of the initial contract or prior.
f. The City shall be named as an Additional Insured on all liability policies, with the exception of Workers' Compensation and Professional Liability.
g. The City shall be granted a Waiver of Subrogation on the Contractor's Workers' Compensation insurance policy.
h. The title of the Agreement, Bid/Contract number, event dates, or other identifying reference must be listed on the Certificate of Insurance.

<u>The Certificate Holder should read as follows:</u>
City of Fort Lauderdale
100 N. Andrews Avenue
Fort Lauderdale, FL 33301

The Contractor has the sole responsibility for all insurance premiums and shall be fully and solely responsible for any costs or expenses as a result of a coverage deductible, co-insurance penalty, or self-insured retention; including any loss not covered because of the operation of such deductible, co-insurance penalty, self-insured retention, or coverage exclusion or limitation. Any costs for adding the City as an Additional Insured shall be at the Contractor's expense.

If the Contractor's primary insurance policy/policies do not meet the minimum requirements, as set forth in this Agreement, the Contractor may provide evidence of an Umbrella/Excess insurance policy to comply with this requirement.

The Contractor's insurance coverage shall be primary insurance as respects to the City, a Florida municipal corporation, its officials, employees, and volunteers. Any insurance or self-insurance maintained by the City, a Florida municipal corporation, its officials, employees, or volunteers shall be non-contributory.

Any exclusion or provision in any insurance policy maintained by the Contractor that excludes coverage required in this Agreement shall be deemed unacceptable and shall be considered breach of contract.

All required insurance policies must be maintained until the contract work has been accepted by the City, or until this Agreement is terminated, whichever is later. Any lapse in coverage shall be considered breach of contract. In addition, Contractor must provide to the City confirmation of coverage renewal via an updated certificate should any policies expire prior to the expiration of this Agreement. The City reserves the right to review, at any time, coverage forms and limits of Contractor's insurance policies.

The Contractor shall provide notice of any and all claims, accidents, and any other occurrences associated with this Agreement to the Contractor's insurance company or companies and the City's Risk Management office, as soon as practical.

It is the Contractor's responsibility to ensure that any and all of the Contractor's independent contractors and subcontractors comply with these insurance requirements. All coverages for independent contractors and subcontractors shall be subject to all of the applicable requirements stated herein. Any and all deficiencies are the responsibility of the Contractor.

NOTE: CITY PROJECT NUMBER, PROJECT NAME AND BID NUMBER MUST APPEAR ON EACH CERTIFICATE, AND THE CITY OF FORT LAUDERDALE MUST BE NAMED ON THE CERTIFICATE AS AN "ADDITIONAL INSURED" ON REQUIRED LIABILITY POLICIES.

A Sample Insurance Certificate shall be included with the proposal to demonstrate the firm's ability to comply with insurance requirements. Provide a previous certificate or other evidence listing the insurance companies' names for all required coverage, and the dollar amounts of the coverage.

11. PERFORMANCE AND PAYMENT BOND: 100%

12. CITY PROJECT MANAGER

The Project Manager is hereby designated by the City as Juan Calos Samuel whose address is 101 NE 3 Avenue, 14th Floor, Fort Lauderdale, Florida 33301-1016, telephone number: (954) 828-6323, and e-mail address is jsamuel@fortlauderdale.gov. The Project Manager will assume all duties and responsibilities and will have the rights and authorities assigned to the Project Manager in the Contract Documents in connection with completion of the Work in accordance with this Agreement.

13. LIQUIDATED DAMAGES *(See Article 16, Liquidated Damages, of the Contract for details)*

Upon failure of the Contractor to complete the Work within the time specified for completion, the Contractor shall pay to the City the sum of **500 Hundred Dollars ($500.00)** for each and every calendar day that the completion of the Work is delayed beyond the time specified in this Agreement for completion, as fixed and agreed liquidated damages and not as a penalty, so long as the delay is caused by the Contractor. (See Article 16, Liquidated Damages Clause, of the Contract)

14. PAYMENT (*See Article 7, Payment, of the Contract for other details*)

The City shall make payment to the Contractor through utilization of the City's P-Card Program. The City has implemented a Purchasing Card (P-Card) Program utilizing both the VISA and MASTERCARD networks. Purchases from this contract will be made utilizing the City's Purchasing Card. Contractor will receive payment from the purchasing

card in the same manner as other credit card purchases. Accordingly, Contractor must presently have the ability to accept these credit cards or take whatever steps necessary to implement the ability before the start of the contract term, or contract award by the City. All costs associated with the Contractor's participation in this purchasing program shall be borne by the Contractor. The City reserves the right to revise this program as necessary.

Payment Card Industry (PCI) Compliance

Contractor agrees to comply with all applicable state, federal and international laws, as well as industry best practices, governing the collection, access, use, disclosure, safeguarding and destruction of Protected Information.

Contractor and/or any subcontractor that handles credit card data must be, and remain, PCI compliant under the current standards and will provide documentation confirming compliance upon request by the City of Fort Lauderdale, failure to produce documentation could result in termination of the contract.

15. WORK SCHEDULE (including overtime hours):

Regular work hours: **8:00 am to 5:00 pm, Monday through Friday.**
City Inspector Hours: **8:00 am to 4:30 pm, Monday through Friday.**

Any inspection requested by the contractor outside those hours will be considered overtime to be paid by the Contractor.

16. INSPECTION OVERTIME COST: $100/hr.

CITY OF FORT LAUDERDALE
CONSTRUCTION AGREEMENT

THIS Agreement made and entered into this _____ day of _____, 20__, by and between the City of Fort Lauderdale, a Florida municipal corporation (City) and _____, a Florida _____ Company/Corporation (Contractor), ("Party" or collectively "Parties");

WHEREAS, the City desires to retain a contractor for the Project as expressed in its Invitation to Bid No., **12712-123**, Project Number, **10814**, which was opened on _____; and,

WHEREAS, the Contractor has expressed its willingness and capability to perform the necessary work to accomplish the Project.

NOW, THEREFORE, the City and the Contractor, in consideration of the mutual covenants and conditions contained herein and for other good and valuable consideration, the receipt and sufficiency is hereby acknowledged, agree as follows:

ARTICLE 1 – DEFINITIONS

Whenever used in this Agreement or in other Contract Documents, the following terms have the meanings indicated which are applicable to both the singular and plural forms:

1.1 Agreement – This written Agreement between the City and the Contractor covering the work to be performed including other Contract Documents that are attached to or incorporated in the Agreement.

1.2 Application for Payment – The form accepted by the City which is to be used by the Contractor in requesting progress or final payment and which is to include such supporting documentation as is required by the Contract Documents.

1.3 Approve – The word approve is defined to mean review of the material, equipment or methods for general compliance with design concepts and with the information given in the Contract Documents. It does not imply a responsibility on the part of the City to verify in every detail conformance with plans and specifications.

1.4 Bid – The offer or Bid of the Contractor submitted on the prescribed form setting forth the total prices for the Work to be performed.

1.5 Bid Documents – Advertisement for Invitation to Bids, the Instructions to Bidders, the Bid Form (with supplemental affidavits and sample agreements), the Contract Forms, General Conditions, the Supplementary Conditions, the Specifications, and the Plans, which documents all become an integral part of the Contract Documents.

1.6 Certificate of Substantial Completion - Certificate provided by the City certifying that all Work, excluding the punch list items, has been completed, inspected, and accepted by the City.

Sample Agreement

1.7 Change Order - A written document ordering a change in the Contract Price or Contract Time or a material change in the Work.

1.8 City – The City of Fort Lauderdale, Florida, including but not limited to its employees, agents, officials, representatives, contractors, subcontractors, volunteers, successors and assigns, with whom the Contractor has entered into the Agreement and for whom the Work is to be provided.

1.9 Contract Documents – The Contract Documents shall consist of this Agreement, Exhibits to this Agreement, Public Construction Bond, Performance Bond, Payment Bond and Certificates of Insurance, Notice of Award and Notice to Proceed, General Conditions, Special Conditions, Technical Specifications, Plans/Drawings, Addenda, Bid Form and supplement Affidavits and Agreements, all applicable provisions of State and Federal Law and any modification, including Change Orders or written amendments duly delivered after execution of Agreement, Invitation to Bid, Instructions to Bidders and Bid Bond, Contractor's response to the City's Invitation to Bid, Schedule of Completion, Schedule of Values, all amendments, modifications and supplements, work directive changes issued on or after the Effective Date of the Agreement, as well as any additional documents that are required to be submitted under the Agreement.

Permits on file with the City and/or those permits to be obtained shall be considered directive in nature and will be considered a part of this Agreement. A copy of all permits shall be given to the City for inclusion in the Contract Documents. Terms of permits shall be met prior to acceptance of the Work and release of the final payment.

1.10 Contract Price – The amount established in the bid submittal and award by the City's City Commission, its successors and assigns, as may be amended by Change Order.

1.11 Contract Time – The number of calendar days stated in the Agreement for the completion of the Work. The dates on which the work shall be started and shall be completed as stated in the Notice to Proceed.

1.12 Contractor – The person, firm, company, or corporation with whom the City has entered into the Agreement, including but not limited to its employees, agents, representatives, contractors, subcontractors, their subcontractors and their other successors and assigns.

1.13 Day – A calendar day of twenty-four (24) hours ending at midnight.

1.14 Defective – When modifying the word "Work" refers to work that is unsatisfactory, faulty, or deficient, or does not conform to the Contract Documents or does not meet the requirements of any inspection, test or approval referred to in the Contract Documents, or has been damaged prior to the Project Manager's recommendation of final payment.

1.15 Effective Date of the Agreement – The effective date of the Agreement shall be the date the City Commission approves the work.

1.16 Final Completion Date – The date the Work is completed, including completion of the final punch list, and delivered along with those items specified in the Contract Documents and is accepted by the City.

Sample Agreement

1.17 Hazardous Materials (HAZMAT) - Any solid, liquid, or gaseous material that is toxic, flammable, radioactive, corrosive, chemically reactive, or unstable upon prolonged storage in quantities that could pose a threat to life, property, or the environment defined in Section 101(14) of Comprehensive Environmental Response, Compensation and Liability Act of 1980 and in 40 CFR 300.6. Also defined by 49 CFR 171.8 as a substance or material designated by the Secretary of Transportation to be capable of posing an unreasonable risk to health, safety, and property when transported in commerce and which has been so designated.

1.18 Hazardous Substance - As defined by Section 101(14) of the Comprehensive Environmental Response, Compensation and Liability Act; any substance designated pursuant to Section 311(b) (2) (A) of the Clean Water Act; any element, compound, mixture, solution or substance designated pursuant to Section 102 identified under or listed pursuant to Section 3001 of the Solid Waste Disposal Act {but not including any waste listed under Section 307[a] of the Clean Water Act}; any hazardous air pollutant listed under Section 112 of the Clean Air Act; and any imminently hazardous chemical substance or mixture pursuant to Section 7 of the Toxic Substances Control Act. The term does not include petroleum, including crude oil or any fraction thereof, which is not otherwise specifically listed or designated as a hazardous substance in the first sentence of this paragraph, and the term does not include natural gas, natural gas liquids, liquefied natural gas, or synthetic gas usable for fuel (or mixtures of natural gas and such synthetic gas).

1.19 Hazardous Waste - Those solid wastes designated by OSHA in accordance with 40 CFR 261 due to the properties of ignitability, corrosivity, reactivity, or toxicity. Any material that is subject to the Hazardous Waste Manifest requirements of the EPA specified in 40 CFR Part 262.

1.20 Holidays - Those designated non-work days as established by the City Commission of the City of Fort Lauderdale.

1.21 Inspection – The term “inspection” and the act of inspecting as used in this Agreement is defined to mean the examination of construction to ensure that it conforms to the design concept expressed in the plans and specifications. This term shall not be construed to mean supervision, superintending and/or overseeing.

1.22 Notice of Award - The written notice by City to the Contractor stating that upon compliance by the Contractor with the conditions precedent enumerated therein, within the time specified that the City will sign and deliver this Agreement.

1.23 Notice to Proceed – A written notice to Contractor authorizing the commencement of the activities identified in the notice or as described in the Contract Documents.

1.24 Plans - The official graphic representations of this Project that are a part of the Contract Documents.

1.25 Premises (otherwise known as Site or Work Site) – means the land, buildings, facilities, etc. upon which the Work is to be performed.

1.26 Project – The construction project described in the Contract Documents, including the Work described therein.

Sample Agreement

1.27 Project Manager - The employee of the City, or other designated individual who is herein referred to as the Project Manager, will assume all duties and responsibilities and will have the rights and authorities assigned to the Project Manager in the contract Documents in connection with completion of the Work in accordance with this Agreement. The Project Manager, or designee, shall be the authorized agent for the City unless otherwise specified.

1.28 Punch List - The City's list of Work yet to be done or be corrected by the Contractor, before the Final Completion date can be determined by the City.

1.29 Record Documents - A complete set of all specifications, drawings, addenda, modifications, shop drawings, submittals and samples annotated to show all changes made during the construction process.

1.30 Record Drawings or "As-Builts" - A set of drawings which show significant changes in the work made during construction and which are usually based on drawings marked up in the field and other data furnished by the Contractor. These documents will be signed and sealed by a Professional Engineer or a Professional Land Surveyor licensed in the State of Florida and employed by the Contractor at no cost to the City.

1.31 Substantially Completed Date – A date when the Contractor has requested in writing, stating that the Work is substantially completed and is ready for an inspection and issuance of a final punch list for the Project. If, at the time of inspection, it is determined the project is substantially completed, the City will issue a letter of Substantial Completion along with a punch list of incomplete or deficient items to be completed prior to requesting a Final Completion inspection.

1.32 Work – The construction and services required by the Contract Documents, whether completed or partially completed, and includes all labor, materials, equipment, and services provided or to be provided by Contractor to fulfill Contractor's obligations. The Work may constitute the whole or a part of the Project.

ARTICLE 2 – SCOPE OF WORK

2.1 The Contractor shall complete all work as specified or indicated in the Contract Documents. The Project for which the Work under the Contract Documents may be the whole or only part is generally described as follows:

River Oaks Pumpstations
ITB **12712-123** PROJECT **12745**

2.2 All Work for the Project shall be constructed in accordance with the approved plans and Specifications. The Work generally involves:

PROJECT DESCRIPTION

The project is located at the River Oaks Preserve located at the River Oaks Preserve (2117 SW 19 Ave), in the City of Fort Lauderdale. The work to be accomplished under this contract includes, but is not limited to, installation of wet well, effluent boxes, intake

Sample Agreement

structures, chain link fence installation, waterline connections, sheet pile installation, concrete piling installation, landscaping & pavement restoration, handrail installation, pump station instrumentation installation, mechanical, electrical and plumbing infrastructure installation, generator and transformer pad work and Maintenance of Traffic (MOT).

2.3 Within ten (10) days of the execution of this Agreement, the Contractor shall submit a Construction Schedule, Schedule of Values and a listing of all personnel employed. The general sequence of the Work shall be submitted by the Contractor and approved by the City before any work commences. The City reserves the right to issue construction directives necessary to facilitate the Work or to minimize any conflict with operations.

ARTICLE 3 – PROJECT MANAGER

3.1 The Project Manager is hereby designated by the City as Juan Carlos Samuel, whose address is 101 NE. 3 Avenue, 14th Floor, Fort Lauderdale, FL 33301, telephone number: (954) 828-6323, and email address is jsamuel@fortlauderdale.gov. The Project Manager will assume all duties and responsibilities and will have the rights and authorities assigned to the Project Manager in the Contract Documents in connection with completion of the Work in accordance with this Agreement.

ARTICLE 4 – CONTRACT DOCUMENTS

The Contract Documents, which comprise the entire Agreement between the City and Contractor, are incorporated herein and attached to this Agreement, and consist of the following:

4.1 This Agreement.

4.2 Exhibits to this Agreement: (Plans sheets [ ] to [ ] inclusive).

4.3 Public Construction Bond, Performance Bond, Payment Bond and Certificates of Insurance.

4.4 Notice of Award and Notice to Proceed.

4.5 General Conditions and Special Conditions.

4.6 Technical Specifications.

4.7 Plans/Drawings.

4.8 Addenda number _____ through _____, inclusive.

4.9 Bid Form and supplement Affidavits and Agreements.

4.10 All applicable provisions of State and Federal Law.

4.11 Invitation to Bid No., **12712-123**, Instructions to Bidders, and Bid Bond.

Sample Agreement

4.12 Contractor's response to the City's Invitation to Bid No., **12712-123**, dated _____.

4.13 Schedule of Completion.

4.14 All amendments, modifications and supplements, change orders and work directive Changes, issued on or after the Effective Date of the Agreement.

4.15 Any additional documents that are required to be submitted under the Agreement.

4.16 Permits on file with the City and or those permits to be obtained shall be considered directive in nature and will be considered a part of this Agreement.

In the event of any conflict between the documents or any ambiguity or missing specification or instruction, the following priority is established:

a. Approved change orders, addenda or amendments.

b. Specifications and Drawings.

c. Special Conditions.

d. General Conditions.

e. This Agreement dated _____, and any attachments.

f. Invitation to Bid No., **12712-123**, and the specifications prepared by the City.

g. Contractor's response to the City's Invitation to Bid No., **12712-123**, dated _____.

h. Schedule of Values.

i. Schedule of Completion.

If during the performance of the Work, Contractor finds a conflict, error or discrepancy in the Contract Documents, Contractor shall so report to the Project Manager, in writing, within five (5) calendar days, and before proceeding with the Work affected shall obtain a written interpretation or clarification from the City.

Any Work that may reasonably be inferred from the specifications or plans as being required to produce the intended result shall be supplied whether or not it is specifically called for. When words which have a well-known technical or trade meaning are used to describe Work, materials, or equipment, such works shall be interpreted in accordance with such meaning. Reference to standard specifications, manuals or codes of any technical society, organization or associations, or to the code of any governmental authority whether such reference be specific or implied, shall mean the latest standard specification, manual or code in effect as of the Effective Date of this Agreement, except as may be otherwise specifically stated. However, no provision of any referenced standard specification, manual or code (whether or not specifically incorporated by reference in the Contract Documents) shall change the duties and

Sample Agreement

responsibilities of the City, the Contractor, or any of their agents or employees from those set forth in the Contract Documents.

ARTICLE 5 – CONTRACT TIME

5.1 The Contractor recognizes that **TIME IS OF THE ESSENCE**. The Work shall commence within **20** calendar days of the date of the Notice to Proceed.

5.2 The Work shall be Substantially Completed within **450** calendar days after the date when the Contract Time commences to run as provided in the Notice to Proceed.

5.3 The Work shall be finally completed on the Final Completion Date and ready for final payment in accordance with this Agreement within **510** calendar days after the date when the Contract Time commences to run as provided in the Notice to Proceed.

ARTICLE 6 – CONTRACT PRICE

6.1 City shall pay Contractor for performance of the Work in accordance with Article 7, subject to additions and deletions by Change Order, as provided for in this Agreement.

6.2 The Parties expressly agree that the Contract Price, which shall not exceed the amount of **$**_____, constitutes the total maximum compensation payable to Contractor for performing the Work, plus any Work done pursuant to a Change Order. The Contract Price is in accordance with the line items unit prices listed in the Bid. Line items are based on a unit price cost multiplied by a defined quantity. Any additional duties, responsibilities and obligations assigned to or undertaken by Contractor shall be at Contractor's expense without change to the Contract Price.

6.3 The Contract Price constitutes the compensation payable to Contractor for performing the Work plus any Work done pursuant to a Change Order. All duties, responsibilities and obligations assigned to or undertaken by Contractor shall be at Contractor's expense without change in the Contract price.

ARTICLE 7 – PAYMENT

7.1 Contractor shall submit Applications for Payment in accordance with the Contract Documents. Applications for Payment will be processed by City as provided for in the General Conditions.

7.2 Progress Payments. City shall make progress payments on account of the Contract Price on the basis of Contractor's monthly Applications for Payment, which shall be submitted by the Contractor between the first (1st) and the tenth (10th) day after the end of each calendar month for which payment is requested. All progress payments will be made on the basis of the progress of the Work completed.

7.3 Prior to Final Completion, progress payments will be made in an amount equal to ninety-five percent (95%) of the value of Work completed less in each case the aggregate of payments previously made.

Sample Agreement

7.4 Final Payment. Upon final completion of the Work in accordance with the General Conditions, as may be supplemented, the City shall pay Contractor an amount sufficient to increase total payments to one hundred percent (100%) of the Contract Price. However, not less than five percent (5%) of the Contract Price shall be retained until Record Drawings (as-builts), specifications, addenda, modifications and shop drawings, including all manufacturers' instructional and parts manuals are delivered to and accepted by the City.

7.5 City may withhold, in whole or in part, payment to such extent as may be necessary to protect itself from loss on account of:

7.5.1 Defective work not remedied.
7.5.2 Claims filed or reasonable evidence indicating probable filing of claims by other parties against Contractor or City because of Contractor's performance.
7.5.3 Failure of Contractor to make payments properly to subcontractors or for material or labor.
7.5.4 Damage to another contractor not remedied.
7.5.5 Liquidated damages and costs incurred by Consultant for extended construction administration, if applicable.
7.5.6 Failure of Contractor to provide any and all documents required by the Contract Documents.

When the above grounds are removed or resolved satisfactory to the Project Manager, payment shall be made in whole or in part.

7.6 The City shall make payment to the Contractor in accordance with the Florida Prompt Payment Act, Section 218.70, Florida Statutes (2021), as amended or revised, provided, however, complete and error free pay application is submitted.

.

7.7 The City shall make payment to the Contractor through utilization of the City's Purchasing Card (P-Card) Program. The City has implemented a P-Card Program utilizing the MASTERCARD and VISA networks. Purchases from this contract will be made utilizing the City's P-Card. Contractor will receive payment from the purchasing card in the same manner as other credit card purchases. Accordingly, Contractor must presently have the ability to accept these credit cards or take whatever steps necessary to implement the ability before the start of the contract term, or contract award by the City. <u>All costs associated with the Contractor's participation in this purchasing program shall be borne by the Contractor</u>. The City reserves the right to revise this program as necessary.

7.8 Payment Card Industry (PCI) Compliance

Contractor agrees to comply with all applicable state, federal and international laws, as well as industry best practices, governing the collection, access, use, disclosure, safeguarding and destruction of Protected Information.

Contractor and/or any subcontractor that handles credit card data must be, and remain, PCI compliant under the current standards and will provide documentation confirming compliance upon request by the City of Fort Lauderdale. Failure to produce documentation could result in termination of the contract.

Sample Agreement

ARTICLE 8 – CONTRACTOR'S REPRESENTATIONS

In order to induce the City to enter into this Agreement, Contractor makes the following representations upon which the City has relied:

8.1 Contractor is qualified in the field of public construction and in particular to perform the Work and services set forth in this Agreement.

8.2 Contractor has visited the Work Site, has conducted extensive tests, examinations and investigations and represents and warrants a thorough familiarization with the nature and extent of the Contract Documents, the Work, locality, soil conditions, water table condition, moisture conditions and all year-round local weather and climate conditions (past and present), and examination and investigations conducted by Contractor and the Contractor's experts, has determined that no conditions exist that would in any manner affect the Proposed Price and that the project can be completed for the Proposed Price submitted within the Contract Time as defined in this Agreement.

Furthermore, Contractor warrants and confirms that it is totally familiar with, understands and obligates Contractor to comply with all federal, state and local laws, ordinances, rules, regulations and all market conditions that affect or may affect the cost and price of materials and labor needed to fulfill all provisions of this Agreement or that in any manner may affect cost, progress or performance of the Work.

8.3 The Contractor has satisfied itself as to the nature and location of the Work under the Contract Documents, the general and local conditions of the Project, particularly those bearing upon availability of transportation, disposal, handling and storage of materials, availability of labor, water, electric power, and roads, the conformation and conditions at the ground based on City provided reports, the type of equipment and facilities needed preliminary to and during the prosecution of the Work and all other matters which can in any way affect the Work or the cost thereof under the Contract Documents.

8.4 The Contractor has also studied on its own, investigations and tests of subsurface and latent physical conditions at the site or otherwise affecting cost, progress or performance of the Works, and finds and has further determined that no conditions exist that would in any manner affect the Proposed Price and that the Project can be completed for the Proposed Price submitted.

8.5 Contractor has made or caused to be made, examinations, investigations, tests and studies of such reports and related data in addition to those referred to in Paragraphs 8.2, 8.3 and 8.4 above as it deems necessary for the performance of the Work at the Contract Prices, within the Contract Time and in accordance with the other terms and conditions of the Contract Documents; and no additional examinations, investigations, tests, reports or similar data are, or will be, required by Contractor for such purposes.

8.6 Contractor has made or caused to be made, examinations, investigations, tests and studies of such reports and related data in addition to those referred to in Paragraphs 8.2, 8.3 and 8.4 above as it deems necessary for the performance of the Work at the Contract Prices, within the Contract Time and in accordance with the other terms and conditions of the Contract Documents; and no additional examinations, investigations, tests, reports or similar data are, or will be, required by Contractor for such purposes.

Sample Agreement

8.7 Contractor has correlated the results of all such observations, examinations, investigations, tests, reports and data with the terms and conditions of the Contract Documents.

8.8 Contractor has given City written notice of all conflicts, errors or discrepancies that it has discovered in the Contract Documents and the written resolution by City is acceptable to the Contractor.

8.9 Labor

8.9.1 The Contractor shall provide competent, suitable qualified personnel to survey and lay out the Work and perform construction as required by the Contract Documents. The Contractor shall at all times maintain good discipline and order at the site.

8.9.2 The Contractor shall, at all times, have a competent superintendent, capable of reading and thoroughly understanding the drawings and specifications, as the Contractor's agent on the Work, who shall, as the Contractor's agent, supervise, direct and otherwise conduct the Work.

8.9.3 The Contractor shall designate the superintendent on the job to the City, in writing, immediately after receipt of the Notice to Proceed. The Contractor understands and agrees that the superintendent's physical presence on the job site is indispensable to the successful completion of the Work. If the superintendent is frequently absent from the job site, the Project Manager may deliver written notice to the Contractor to stop work or terminate the Agreement in accordance with Article 17.

8.9.4 Where required and necessary, the contractor shall, at all times, have a certified "competent person" assigned to the job site. The Contractor shall assign personnel to the job site that have successfully completed training programs related to trench safety, confined space work, and maintenance of traffic (MOT). Personnel certified by the International Municipal Signal Associations with Florida Department of Transportation qualifications are required relative to MOT. Any other certifications that may be required by applicable permitting agencies for the Work shall also be complied with by the Contractor. Failure to pursue the Work with the properly certified supervisory staff may result in notice to stop work or terminate the Agreement in accordance with Article 17.

8.10 Materials:

8.10.1 The Contractor shall furnish all materials, equipment, labor, transportation, construction equipment and machinery, tools, appliances, fuel, power, light, heat, telephone, water and sanitary facilities and all other facilities and incidentals necessary for the execution, testing, initial operation and completion of Work.

8.10.2 All materials and equipment shall be of good quality and new, except as otherwise provided in the Contract Documents. Suppliers shall be selected and paid by the Contractor; the City reserves the right to approve all suppliers and materials.

Sample Agreement

8.11 Work Hours: Except in connection with the safety or protection of persons, or the Work, or property at the site or adjacent thereto, and except as otherwise indicated in the Supplementary Conditions, all work at the site shall be performed during regular working hours between 8 a.m. and 5:00 p.m., Monday through Friday.

Unless approved by the City in advance, the Contractor will not perform work on Saturday, Sunday or any legal holiday (designated by the City of Fort Lauderdale) without the Project Manager's written consent at least seventy-two (72) hours in advance of starting such work. For any overtime inspection required by City personnel, the Contractor shall pay for the additional charges to the City with respect to such overtime work. Such additional charges shall be a subsidiary obligation of the Contractor and no extra payment shall be made to the Contractor for overtime work. **It shall be noted that the City's Inspector work hours are from 8:00 a.m. to 4:30 p.m., Monday through Friday, and any work requiring inspection oversight being performed outside of this timeframe shall be paid for by the Contractor as Inspector overtime at a rate of $100.00 per hour.** The cost to the Contractor to reimburse the City for overtime inspection is established at direct-labor and overtime costs for each person or inspector required. Incidental overtime costs for engineering, testing and other related services will also be charged to the Contractor at the actual rate accrued.

8.12 Patent Fee and Royalties: The Contractor shall pay all license fees and royalties and assume all costs incident to the use in the performance of the Work or the incorporation in the Work, or any invention, design, process, product or device which is the subject of patent rights or copyrights held by others. The Contractor hereby expressly binds himself or itself to indemnify and hold harmless the City from all such claims and fees and from any and all suits and action of every name and description that may be brought against City on account of any such claims, fees, royalties, or costs for any such invention or patent, and from any and all suits or actions that may be brought against said City for the infringement of any and all patents or patent rights claimed by any person, firm corporation or other entity.

8.13 Permits: The Contractor shall obtain and pay for all permits and licenses. There shall be no allowance for Contractor markup, overhead or profit for permits and licenses.

The Contractor shall pay all government charges which are applicable at the time of opening of proposals. It shall be the responsibility of the Contractor to secure and pay for all necessary licenses and permits of a temporary nature necessary for the prosecution of Work.

8.14 Law and Regulations: The Contractor shall give all notices and comply with all laws, ordinances, rules and regulations applicable to the Work. If the Contractor observes that the specifications or plans are in conflict, the Contractor shall give the Project Manager prompt written notice thereof within five (5) calendar days, and any necessary changes shall be adjusted by any appropriate modifications. If the Contractor performs any work knowing or having reason to know that it is contrary to such laws, ordinances, rules, standards, specifications and regulations, and without such notice to the Project Manager, the Contractor shall bear all costs arising therefrom.

Sample Agreement

8.15 Taxes: The Contractor shall pay all sales, consumer, use and other similar taxes required to be paid by him in accordance with the laws of the City of Fort Lauderdale, County of Broward, and the State of Florida.

8.16 Contractor Use of Premises: The Contractor shall confine construction equipment, the storage of materials and equipment and the operations of workmen to areas permitted by law, ordinances, permits and/or the requirements of the Contract Documents, and shall not unreasonably encumber the premises with construction equipment or other materials or equipment.

The Contractor shall not enter upon private property for any purpose without first securing the permission of the property owner in writing and furnishing the Project Manager with a copy of said permission. This requirement will be strictly enforced, particularly with regard to such vacant properties as may be utilized for storage or staging by the Contractor.

The Contractor shall conduct its work in such a manner as to avoid damage to adjacent private or public property. Any damage to existing structures of work of any kind, including permanent reference markers or property corner markers, or the interruption of a utility service, shall be repaired or restored promptly at no expense to the City or property owner.

The Contractor will preserve and protect all existing vegetation such as trees, shrubs and grass on or adjacent to the site which do not reasonably interfere with the construction, as determined by the Project Manager. The Contractor will be responsible for repairing or replacing any trees, shrubs, lawns and landscaping that may be damaged due to careless operation of equipment, stockpiling of materials, tracking of grass by equipment or other construction activity. The Contractor will be liable for, or will be required to replace or restore at no expense to the City all properties and areas not protected or preserved as required herein that may be destroyed or damaged.

During the progress of the Work, the Contractor shall keep the premises free from accumulation of waste materials, rubbish and debris resulting from the Work. At the completion of the Work, the Contractor shall remove all waste materials, rubbish and debris from and about the premises as well as all tools, appliances, construction equipment and machinery, and surplus materials and shall leave the site clean and ready for occupancy by the City. The Contractor shall restore to their original condition those portions of the site not designated for alteration by the Contract Documents at no cost to the City.

8.17 Project Coordination: The Contractor shall provide for the complete coordination of the construction effort. This shall include, but not necessarily be limited to, coordination of the following:

8.17.1 Flow of material and equipment from suppliers.
8.17.2 The interrelated work with affected utility companies.
8.17.3 The interrelated work with the City where tie-ins to existing facilities are required.
8.17.4 The effort of independent testing agencies.
8.17.5 Notice to affected property owners as may be directed by the Project Manager.
8.17.6 Coordination with and scheduling of all required inspections from all permitting agencies.

Sample Agreement

8.18 Project Record Documents and Final As-Builts (Record Drawings): Contractor shall be responsible for maintaining up-to-date redline as-built drawings, on site, at all times during construction. All as-built information shall be surveyed and verified by a professional land surveyor registered in the State of Florida. Contractor shall provide the City with a minimum of three (3) sets of signed and sealed record drawings (Final As-Builts) and a CD of the electronic drawings files created in AutoCad 2014 or later. All costs associated with survey work required for construction layout and as-built preparation shall be the responsibility of the Contractor.

8.19 Safety and Protection:

8.19.1 The Contractor shall be responsible for initiating, maintaining and supervising all safety precautions and programs in connection with the Work. The Contractor shall take all necessary precautions for the safety of, and shall provide the necessary protection to prevent damage, injury or loss to:

8.19.1.1 All employees working on the project and other persons who may be affected thereby.

8.19.1.2 All the Work and all materials or equipment to be incorporated therein, whether in storage on or off the site.

8.19.1.3 Other property at the site or adjacent thereto, including trees, shrubs, lawns, walks, pavements, roadways, structures and utilities not designated for removal, relocation or replacement in the course of construction.

8.19.2 The Contractor shall comply with all applicable laws, ordinances, rules, regulations and orders of any public body having jurisdiction for the safety of persons or property or to protect them from damage, injury or loss; and shall erect and maintain all necessary safeguards for such safety and protection. The Contractor shall notify owners of adjacent property and utilities when execution of the Work may affect them at least seventy-two (72) hours in advance (unless otherwise required). All damage, injury or loss to any property caused, directly or indirectly, in whole or in part by the Contractor, any subcontractor or anyone directly or indirectly employed by any of them or anyone for whose acts any of them may be liable, shall be remedied by the Contractor. The Contractor's duties and responsibilities for safety and protection of the Work shall continue until such time as all the Work is completed and accepted by the City.

8.20 Emergencies: In emergencies affecting the safety or protection of persons or the Work or property at the site or adjacent thereto, the Contractor, without special instruction or authorization from the City, is obligated to act to prevent threatened damage, injury or loss. The Contractor shall give the Project Manager prompt written notice of any significant changes in the Work or deviations from the Contract Documents caused thereby.

8.20 Risk of Loss: The risk of loss, injury or destruction shall be on the Contractor until acceptance of the Work by the City. Title to the Work shall pass to the City upon acceptance of the Work by the City.

Sample Agreement

8.21 Environmental: The Contractor has fully inspected the Premises and agrees, except as to the presence of any asbestos, to accept the Premises in an "as is" physical condition, without representation or warranty by the City of any kind, including, without limitation, any and all existing environmental claims or obligations that may arise from the presence of any "contamination" on, in or about the Premises. Further, Contractor and all entitles claiming by, through or under the Contractor, releases and discharges the City from any claim, demand, or cause of action arising out of or relating to the Contractor's use, handling, storage, release, discharge, treatment, removal, transport, decontamination, cleanup, disposal and/or presence of any hazardous substances including asbestos on, under, from or about the Premises. The Contractor shall have no liability for any pre-existing claims or "contamination" on the Premises.

The Contractor shall not use, handle, store, discharge, treat, remove, transport, or dispose of Hazardous Substances including asbestos at, in, upon, under, to or from the Premises until receipt of instructions from the City. At such time, a City approved Change Order, which shall not include any profit, shall authorize the Contractor to perform such services.

The Contractor shall immediately deliver to the Project Manager complete copies of all notices, demands, or other communications received by the Contractor from any governmental or quasi-governmental authority or any insurance company or board of fire underwriters or like or similar entities regarding in any way alleged violations or potential violations of any Environmental Law or otherwise asserting the existence or potential existence of any condition or activity on the Premises which is or could be dangerous to life, limb, property, or the environment.

For other and additional consideration, the Contractor hereby agrees, at its sole cost and expense, to indemnify and protect, defend, and hold harmless the City and its respective employees, agents, officials, officers, representatives, contractors and subcontractors, successors, and assigns (hereafter the "City") from and against any and all claims, demands, losses, damages, costs, expenses, including but not limited to mitigation, restoration, and natural restoration expenses, liabilities, assessments, fines, penalties charges, administrative and judicial proceedings and orders, judgments, causes of action, in law or in equity, remedial action requirements and/or enforcement actions of any kind (including, without limitation, attorneys' fees and costs) directly or indirectly arising out of or attributable to, in whole or in part, the Contractor's use, handling, storage, release, threatened release, discharge, treatment, removal, transport, decontamination, cleanup, disposal and/or presence of a Hazardous Substance (excluding asbestos) on, under, from, to or about the Premises or any other activity carried on or undertaken on or off the Premises by the Contractor or its employees, agents or subcontractors, in connection with the use, handling, storage, release, threatened release, discharge, treatment, mitigation, natural resource restoration, removal, transport, decontamination, cleanup, disposal and/or presence or any Hazardous Substance including asbestos located, transported, or present on, undue, from, to, or about the Premises. This indemnity is intended to be operable under 42 U.S.C. Section 9607, as amended or revised, and any successor section.

The scope of the indemnity obligations includes, but is not limited to: (a) all consequential damages; (b) the cost of any required or necessary repair, cleanup, or detoxification of the applicable real estate and the preparation and implementation of any closure, remedial or other required plan, including without limitation; (i) the costs of

Sample Agreement

removal or remedial action incurred by the United States government or the State of Florida or response costs incurred by any other person, or damages from injury to destruction of, or loss of, natural resources, including the cost of assessing such injury, destruction, or loss, incurred pursuant to the Comprehensive Environmental Response, Compensation and Liability Act, as amended; (ii) the clean-up costs, fines, damages, or penalties incurred pursuant to any applicable provisions of Florida law; and (iii) the cost and expenses of abatement, correction or cleanup, fines, damages, response costs, or penalties which arise from the provisions of any other statute, law, regulation, code ordinance, or legal requirement state or federal; and (c) liability for personal injury or property damage arising under any statutory or common law tort theory, including damages assessed for the maintenance of a public private nuisance, response costs, or for the carrying on of an abnormally dangerous activity.

8.22 No Extended Damages: For other and additional good and valuable consideration the receipt and sufficiency of which is hereby acknowledged, the Contractor covenants and agrees that in the event of any delay of construction or for any other reason or allegation or claim, and notwithstanding the reason of the delay, reason, claim or allegation or who caused them or the construction delay or whether they were caused by the City, that there will be no entitlement to Contractor to or for any direct or indirect financial damages or losses for extended corporate overhead impact, extended project overhead impacts, project support services, mobilization or demobilization or by whatever other label or legal concept or theory and types of names or labels or basis such claims may have, or any business damages or losses of whatever type or nature, and Contractor hereby waives any right to make any such claim or claims. This provision will have application and effect when construction delays are anticipated and agreed upon by both the City and the Contractor.

8.23 No Liens: If any subcontractor, supplier, laborer, or materialmen of Contractor or any other person directly or indirectly acting for or through Contractor files or attempts to file a mechanic's or construction lien against the real property on which the Work is performed or any part or against any personal property or improvements or claim against any monies due or to become due from the City to Contractor or from Contractor to a subcontractor, for or on account of any work, labor, services, material, equipment, or other items furnished in connection with the Work or any Change Order, Contractor agrees to satisfy, remove, or discharge such lien or claim at its own expense by bond, payment, or otherwise within twenty (20) days of the filing or from receipt of written notice from the City.

Additionally, until such time as such lien or claim is satisfied, removed or discharged by Contractor, all monies due to Contractor, or that become due to Contractor before the lien or claim is satisfied, removed or otherwise discharged, shall be held by City as security for the satisfaction, removal and discharge of such lien and any expense that may be incurred while obtaining such. If Contractor shall fail to do so, City shall have the right, in addition to all other rights and remedies provided by this Agreement or by law, to satisfy, remove, or discharge such lien or claim by whatever means City chooses at the entire and sole cost and expense of Contractor which costs and expenses shall, without limitation, include attorney's fees, litigation costs, fees and expenses and all court costs and assessments.

8.24 Weather Emergencies: Upon issuance of a hurricane watch by the National Weather Service, the Contractor shall submit to the City a plan to secure the work area in the

Sample Agreement

event a hurricane warning is issued. The plan shall detail how the Contractor will secure the Premises, equipment and materials in a manner as to prevent damage to the Work and prevent materials and equipment from becoming a hazard to persons and property on and around the Premises. The plan shall include a time schedule required to accomplish the hurricane preparations and a list of emergency contacts that will be available, and in the City before, during and immediately after the storm.

Upon issuance of a hurricane warning by the National Weather Service, if the Contractor has not already done so, the Contractor shall implement its hurricane preparedness plan. Cost of development and implementation of the hurricane preparedness plan shall be considered as incidental to construction. Cost of any clean up and rework required after the storm will be considered normal construction risk within Florida and shall not entitle the Contractor to any additional compensation. Contractor shall be entitled to request an extension in time for completion of the Work, in accordance with the provisions of Article 15 of this Agreement, equal to the time it is shut down for implementation of the preparedness plan, the duration of the storm and a reasonable period to restore the Premises.

8.25 Force Majeure: No Party shall hold the other responsible for damages or for delays in performance caused by force majeure, acts of God, or other acts or circumstances beyond the control of the other party or that could not have been reasonably foreseen and prevented. For this purpose, such acts or circumstances shall include, but not be limited to weather conditions affecting performance, floods, epidemics, pandemics, war, act of Governmental Authority, state of emergency, riots, strikes, lockouts, or other industrial disturbances, or protest demonstrations. Should such acts or circumstances occur, the parties shall use their best efforts to overcome the difficulties arising therefrom and to resume the Work as soon as reasonably possible with the normal pursuit of the Work.

Inclement weather, continuous rain for less than three (3) days or the acts or omissions of subcontractors, third-party contractors, materialmen, suppliers, or their subcontractors, shall not be considered acts of force majeure.

No Party shall be liable for its failure to carry out its obligations under the Agreement during a period when such Party is rendered unable by force majeure to carry out its obligation, but the obligation of the Party or Parties relying on such force majeure shall be suspended only during the continuance of the inability and for no longer period than the unexpected or uncontrollable event.

The Contractor further agrees and stipulates, that its right to excuse its failure to perform by reason of force majeure shall be conditioned upon giving written notice of its assertion that a Force Majeure delay has commenced within ninety-six (96) hours after such an occurrence. The Contractor shall use its reasonable efforts to minimize such delays. The Contractor shall promptly provide an estimate of the anticipated additional time required to complete the Project.

8.26 Participation by Disadvantaged Business Enterprises in Department of Transportation Financial Assisted Contracts: The recipient shall not discriminate on the basis of race, color, national origin, or sex in the award and performance of any DOT-assisted contract or in the administration of its DBE program or the requirements of 49 CFR Part 26. The recipient shall take all necessary and reasonable steps under 49 CFR Part 26 to ensure

Sample Agreement

nondiscrimination in the award and administration of DOT-assisted contracts. The recipient's DBE program, as required by 49 CFR Part 26 and as approved by DOT, is incorporated by reference in this Agreement. Implementation of this program is a legal obligation and failure to carry out its terms shall be treated as a violation of this Agreement. Upon notification to the recipient of its failure to carry out its approved program, the Department may impose sanctions as provided for under Part 26 and may, in appropriate cases, refer the matter for enforcement under 18 U.S.C. 1001 and/or the Program Fraud Civil Remedies Act of 1986 (31 U.S.C. 3801 *et seq.*).

Additionally, the Contractor assures that it, the sub-recipient or its subcontractors shall not discriminate on the basis of race, color, national origin, or sex in the performance of this Agreement. The Contractor shall carry out applicable requirements of 49 CFR Part 26 in the award and administration of DOT-assisted contracts. Failure by the Contractor to carry out these requirements is a material breach of this Agreement, which may result in the termination of this Agreement or such other remedy as the recipient deems appropriate. This additional language must be included in each subcontract the prime Contractor signs with a subcontractor.

ARTICLE 9 – CITY'S RESPONSIBILITIES

9.1 The City shall furnish the data required of the City under the Contract Documents promptly and shall make payments to the Contractor promptly after they are due as provided in Article 7.

9.2 The City shall provide public rights-of-way and easement, where available, for the installation of conduits, transformers pads and related appurtenances only.

9.3 Technical Clarifications and Interpretations:

9.3.1 The City shall issue, with reasonable promptness, such written clarifications or interpretations of the Contract Documents as it may determine necessary, which shall be consistent with or reasonably inferable from the overall intent of the Contract Documents. Should the Contractor fail to request interpretation of questionable items in the Contract Documents, the City shall not entertain any excuse for failure to execute the Work in a satisfactory manner.

9.3.2 The City shall interpret and decide matters concerning performance under the requirements of the Contract Documents, and shall make decisions on all claims, disputes or other matters in question. Written notice of each claim, dispute or other matter will be delivered by claimant to the other Party but in no event later than five (5) days after the occurrence of event, and written supporting data will be submitted to the other Party within five (5) days after such occurrence. All written decisions of the City on any claim or dispute will be final and binding.

9.4 The Contractor shall perform all Work to the reasonable satisfaction of the City in accordance with the Contract Documents. In cases of disagreement or ambiguity, the City shall decide all questions, difficulties, and disputes of whatever nature, which may arise under or by reason of this Agreement or the quality, amount and value of the Work, and the City's decisions on all claims, questions and determination are final.

Sample Agreement

9.5 Cancellation for Unappropriated Funds: The obligation of the City for payment to a Contractor is limited to the availability of funds appropriated in a current fiscal period, and continuation of the contract into a subsequent fiscal period is subject to appropriation of funds, unless otherwise authorized by law.

ARTICLE 10 – BONDS AND INSURANCE

10.1 Public Construction and Other Bonds: The Contractor shall furnish Public Construction or Performance and Payment Bonds ("Bond"), each in an amount at least equal to the Contract Price as security for the faithful performance and payment of all the Contractor's obligations under the Contract Documents. These Bonds shall remain in effect until at least one (1) year after the date of final payment, except as otherwise provided by law. All Bonds shall be furnished and provided by the surety and shall be in substantially the same form as prescribed by the Contract Documents and be executed by such sureties as (i) are licensed to conduct business in the State of Florida, and (ii) are named in the current list of Companies Holding Certificates of Authority as Acceptable Sureties on Federal Bonds and as Acceptable Reinsuring Companies as published in Circular 570 (amended) by the Audit Staff Bureau of Accounts, U.S. Treasury Department and (iii) otherwise meet the requirements set forth herein that apply to sureties. All Bonds signed by an agent must be accompanied by a certified copy of the authority to act.

10.1.1 Performance Bond: The Contractor shall execute and record in the public records of Broward County, Florida, a payment and performance bond in an amount at least equal to the Contract Price with a surety insurer authorized to do business in the State of Florida as surety, ("Bond"), in accordance with Section 255.05, Florida Statutes (2021), as may be amended or revised, as security for the faithful performance and payment of all of the Contractor's obligations under the Contract Documents.

A Corporate Surety Bond legally issued, meeting the approval of, and running to the City in an amount not less than the Contract Price of such improvements, conditioned that the Contractor shall maintain and make all repairs to the improvements constructed by the Contractor at their own expense and free of charge to the City, for the period of one (1) year after the date of acceptance of the Work within such period by reason of any imperfection of the material used or by reason of any defective workmanship, or any improper, imperfect or defective preparation of the base upon which any such improvement shall be laid.

10.2 Disqualification of Surety: If the Surety on any Bond furnished by the Contractor is declared bankrupt or becomes insolvent or its right to do business is terminated in the State of Florida or it ceases to meet the requirements of clauses (i) and (ii) of Paragraph 10.1, the Contractor shall within five (5) days thereafter substitute another Bond and Surety, both of which shall be acceptable to the City.

10.3 Insurance

As a condition precedent to the effectiveness of this Agreement, during the term of this Agreement and during any renewal or extension term of this Agreement, the Contractor, at its sole expense, shall provide insurance of such types and with such terms and limits as noted

Sample Agreement

below. Providing proof of and maintaining adequate insurance coverage are material obligations of the Contractor. The Contractor shall provide the City a certificate of insurance evidencing such coverage. The Contractor's insurance coverage shall be primary insurance for all applicable policies. The limits of coverage under each policy maintained by the Contractor shall not be interpreted as limiting the Contractor's liability and obligations under this Agreement. All insurance policies shall be through insurers authorized or eligible to write policies in the State of Florida and possess an A.M. Best rating of A-, VII or better, subject to approval by the City's Risk Manager.

The coverages, limits, and/or endorsements required herein protect the interests of the City, and these coverages, limits, and/or endorsements shall in no way be relied upon by the Contractor for assessing the extent or determining appropriate types and limits of coverage to protect the Contractor against any loss exposures, whether as a result of this Agreement or otherwise. The requirements contained herein, as well as the City's review or acknowledgement, are not intended to and shall not in any manner limit or qualify the liabilities and obligations assumed by the Contractor under this Agreement.

The following insurance policies and coverages are required:

Commercial General Liability
Coverage must be afforded under a Commercial General Liability policy with limits not less than:

- $2,000,000 each occurrence and $2,000,000 aggregate for Bodily Injury, Property Damage, and Personal and Advertising Injury
- $2,000,000 each occurrence and $2,000,000 aggregate for Products and Completed Operations

Policy must include coverage for contractual liability and independent contractors.

The City, a Florida municipal corporation, its officials, employees, and volunteers are to be covered as an additional insured with a CG 20 26 04 13 Additional Insured – Designated Person or Organization Endorsement or similar endorsement providing equal or broader Additional Insured Coverage with respect to liability arising out of activities performed by or on behalf of the Contractor. The coverage shall contain no special limitation on the scope of protection afforded to the City, its officials, employees, and volunteers.

Professional Liability
Coverage must be afforded for Wrongful Acts in an amount not less than $1,000,000 each claim and $2,000,000 aggregate.

Contractor must keep the professional liability insurance in force until the third anniversary of expiration or early termination of this Agreement or the third anniversary of acceptance of work by the City, whichever is longer, which obligation shall survive expiration or early termination of this Agreement.

Business Automobile Liability
Coverage must be afforded for all Owned, Hired, Scheduled, and Non-Owned vehicles for Bodily Injury and Property Damage in an amount not less than $1,000,000 combined single limit each accident.

If the Contractor does not own vehicles, the Contractor shall maintain coverage for Hired and Non-Owned Auto Liability, which may be satisfied by way of endorsement to the Commercial General Liability policy or separate Business Auto Liability policy.

Crane and Rigging Liability

Sample Agreement

Coverage must be afforded for any crane operations under the Commercial General or Business Automobile Liability policy as necessary, in line with the limits of the associated policy.

Workers' Compensation and Employer's Liability
Coverage must be afforded per Chapter 440, Florida Statutes. Any person or entity performing work for or on behalf of the City must provide Workers' Compensation insurance. Exceptions and exemptions will be allowed by the City's Risk Manager, if they are in accordance with Florida Statute.

The Contractor waives, and the Contractor shall ensure that the Contractor's insurance carrier waives, all subrogation rights against the City, its officials, employees, and volunteers for all losses or damages. The City requires the policy to be endorsed with WC 00 03 13 Waiver of our Right to Recover from Others or equivalent.

The Contractor must be in compliance with all applicable State and federal workers' compensation laws, including the U.S. Longshore Harbor Workers' Act and the Jones Act, if applicable.

Insurance Certificate Requirements
a. The Contractor shall provide the City with valid Certificates of Insurance (binders are unacceptable) no later than ten (10) days prior to the start of work contemplated in this Agreement.
b. The Contractor shall provide to the City a Certificate of Insurance having a thirty (30) day notice of cancellation; ten (10) days' notice if cancellation is for nonpayment of premium.
c. In the event that the insurer is unable to accommodate the cancellation notice requirement, it shall be the responsibility of the Contractor to provide the proper notice. Such notification will be in writing by registered mail, return receipt requested, and addressed to the certificate holder.
d. In the event the Agreement term or any surviving obligation of the Contractor following expiration or early termination of the Agreement goes beyond the expiration date of the insurance policy, the Contractor shall provide the City with an updated Certificate of Insurance no later than ten (10) days prior to the expiration of the insurance currently in effect. The City reserves the right to suspend the Agreement until this requirement is met.
e. The Certificate of Insurance shall indicate whether coverage is provided under a claims-made or occurrence form. If any coverage is provided on a claims-made form, the Certificate of Insurance must show a retroactive date, which shall be the effective date of the initial contract or prior.
f. The City shall be named as an Additional Insured on all liability policies, with the exception of Workers' Compensation and Professional Liability.
g. The City shall be granted a Waiver of Subrogation on the Contractor's Workers' Compensation insurance policy.
h. The title of the Agreement, Bid/Contract number, event dates, or other identifying reference must be listed on the Certificate of Insurance.

The Certificate Holder should read as follows:
City of Fort Lauderdale
100 N. Andrews Avenue
Fort Lauderdale, FL 33301

The Contractor has the sole responsibility for all insurance premiums and shall be fully and solely responsible for any costs or expenses as a result of a coverage deductible, co-insurance penalty, or self-insured retention; including any loss not covered because of the operation of such deductible, co-insurance penalty, self-insured retention, or coverage exclusion or limitation. Any costs for adding the City as an Additional Insured shall be at the Contractor's expense.

Sample Agreement

If the Contractor's primary insurance policy/policies do not meet the minimum requirements, as set forth in this Agreement, the Contractor may provide evidence of an Umbrella/Excess insurance policy to comply with this requirement.

The Contractor's insurance coverage shall be primary insurance as respects to the City, a Florida municipal corporation, its officials, employees, and volunteers. Any insurance or self-insurance maintained by the City, a Florida municipal corporation, its officials, employees, or volunteers shall be non-contributory.

Any exclusion or provision in any insurance policy maintained by the Contractor that excludes coverage required in this Agreement shall be deemed unacceptable and shall be considered breach of contract.

All required insurance policies must be maintained until the contract work has been accepted by the City, or until this Agreement is terminated, whichever is later. Any lapse in coverage shall be considered breach of contract. In addition, Contractor must provide to the City confirmation of coverage renewal via an updated certificate should any policies expire prior to the expiration of this Agreement. The City reserves the right to review, at any time, coverage forms and limits of Contractor's insurance policies.

The Contractor shall provide notice of any and all claims, accidents, and any other occurrences associated with this Agreement to the Contractor's insurance company or companies and the City's Risk Management office, as soon as practical.

It is the Contractor's responsibility to ensure that any and all of the Contractor's independent contractors and subcontractors comply with these insurance requirements. All coverages for independent contractors and subcontractors shall be subject to all of the applicable requirements stated herein. Any and all deficiencies are the responsibility of the Contractor.

NOTE: CITY PROJECT NUMBER, PROJECT NAME AND BID NUMBER MUST APPEAR ON EACH CERTIFICATE, AND THE CITY OF FORT LAUDERDALE MUST BE NAMED ON THE CERTIFICATE AS AN "ADDITIONAL INSURED" ON REQUIRED LIABILITY POLICIES.

A Sample Insurance Certificate shall be included with the proposal to demonstrate the firm's ability to comply with insurance requirements. Provide a previous certificate or other evidence listing the insurance companies' names for all required coverage, and the dollar amounts of the coverage.

ARTICLE 11- WARRANTY AND GUARANTEE, TESTS AND INSPECTIONS, CORRECTION, REMOVAL OR ACCEPTANCE OF DEFECTIVE WORK

11.1 Warranty: The Contractor warrants and guarantees to the City that all Work will be in accordance with the Contract Documents and will not be defective. Prompt notice of all defects shall be given to the Contractor. All defective work, whether or not in place, may be rejected, corrected or accepted as provided in this Article.

11.1.1 Warranty of Title: The Contractor warrants to the City that it possesses good, clear and marketable title to all equipment and materials provided and that there are no pending liens, claims or encumbrances against the equipment and materials.

Sample Agreement

11.1.2 Warranty of Specifications: The Contractor warrants that all equipment, materials and workmanship furnished, whether furnished by the Contractor, its subcontractors or suppliers, will comply with the specifications, drawings and other descriptions supplied or adopted and that all services will be performed in a workmanlike manner.

11.1.3 Warranty of Merchantability: The Contractor warrants that any and all equipment to be supplied pursuant to this Agreement is merchantable, free from defects, whether patent or latent in material or workmanship, and fit for the ordinary purposes for which it is intended.

11.2 Tests and Inspections: Contractor shall retain the services of an independent, certified, testing lab to perform all testing as required by the specifications, contract drawings, and any applicable permitting agency. Contractor shall provide evidence of certification to the City before the work and testing is done. Testing results shall be submitted to the Project Manager for review and approval at the time the results are provided to the Contractor. The Contractor shall give the Project Manager and City Inspector a minimum of twenty-four (24) hours' advanced notice of readiness of the Work for all required inspections, tests, or approvals and shall notify all applicable permitting agencies in a timely manner based on requirements set forth in the permit documents.

11.2.1 Neither observations by the Project Manager nor inspections, tests or approvals by others shall relieve the Contractor from its obligations to perform the Work in accordance with the Contract Documents.

11.3 Uncovering Work: If any work that is to be inspected, tested or approved is covered without approval or consent of the Project Manager, it must, if requested by the Project Manager, be uncovered for observation and/or testing. Such uncovering and replacement shall be at the Contractor's sole expense unless the Contractor has given the Project Manager timely notice of the Contractor's intention to cover such Work and the Project Manager has not acted with reasonable promptness in response to such notice.

11.3.1 If the Project Manager considers it necessary or advisable that Work covered in accordance with Paragraphs 11.2.1 be observed by the City or inspected or tested by others, the Contractor at the City's request, shall uncover, expose or otherwise make available for observation, inspection or testing as the Project Manager may require, that portion of the Work in question, furnishing all necessary labor, material and equipment. If it is found that such Work is defective, the Contractor shall bear all the expenses of such uncovering, exposure, observation, inspection and testing and of satisfactory reconstruction, including compensation for additional professional services, and an appropriate deductive Change Order shall be issued. If, however, such work is not found to be defective, the Contractor shall be allowed an increase in the Contract Price or an extension of the Contract Time, or both, directly attributable to such uncovering, exposure, observation, inspection testing and reconstruction if it makes a claim therefore as provided in Articles 14 and 15.

11.4 City May Stop the Work: If the Work is defective, or the Contractor fails to supply sufficient skilled supervisory personnel or workmen or suitable materials or equipment

Sample Agreement

or the work area is deemed unsafe, the City may order the Contractor to stop the Work, or any portion thereof, until the cause for such order has been eliminated; however, this right of the City to stop the Work shall not give rise to any duty on the part of the City to exercise this right for the benefit of the Contractor or any other Party. The City will not award any increase in Contract Price or Contract Time if the Work is stopped due to the circumstances described herein.

11.5 Correction or Removal of Defective Work Before Final Payment: If required by the Project Manager, the Contractor shall promptly, without cost to the City and as specified by the Project Manager, either correct any defective Work, whether or not fabricated, installed or completed, or if the Work has been rejected by the City remove it from the site and replace it with non-defective Work.

11.6 One Year Correction Period After Final Payment: If within one (1) year after the date of final acceptance, or such longer period of time as may be prescribed by law or by the terms of any applicable special guarantee required by the Contract Documents, any work is found to be defective, the Contractor shall promptly, without cost to the City and in accordance with the City's written instructions, either correct such defective Work, or, if it has been rejected by the City, remove it from the site and replace it with non-defective Work.

If the Contractor does not promptly comply with the terms of such instructions or in an emergency where delay would cause serious risk of loss or damage, the City may have the defective Work corrected or the rejected Work removed and replaced, and all direct and indirect costs for such removal and replacement, including compensation for additional professional services, shall be paid by the Contractor.

11.7 Acceptance of Defective Work, Deductions: If, instead of requiring correction or removal and replacement of defective Work, the City, at the City's sole option, prefers to accept it, the City may do so. In such a case, if acceptance occurs prior to the Project Manager's recommendation of final payments, a Change Order shall be issued incorporating the necessary revisions in the Contract's Documents, including appropriate reduction in the Contract Price; or if the acceptance occurs after such recommendation, an appropriate amount shall be paid by the Contractor to the City.

11.8 City May Correct Defective Work: If the Contractor fails within a reasonable time after written notice of the Project Manager to proceed to correct defective Work or to remove and replace rejected Work as required by the Project Manager in accordance with Paragraph 11.5, or if the Contractor fails to perform the Work in accordance with the Contract Documents, the City may, after seven (7) days' written notice to the Contractor, correct and remedy any such deficiency. In exercising its rights under this paragraph, the City shall proceed expeditiously. To the extent necessary to complete corrective and remedial action, the City may exclude the Contractor from all or part of the site, take possession of all or part of the Work, suspend the Contractor's services related thereto and take possession of the Contractor's tools, construction equipment and materials stored at the site or elsewhere. The Contractor shall allow the City's representative agents and employees such access to the site as may be necessary to enable the City to exercise its rights under this paragraph. All direct and indirect costs of the City in exercising such rights shall be charged against the Contractor in an amount verified by the Project Manager, and a Change Order shall be issued incorporating the necessary revisions in the Contract Documents and a reduction in the Contract Price. Such direct

Sample Agreement

and indirect costs shall include, in particular but without limitation, compensation for additional professional services required and costs of repair and replacement of work of others destroyed or damaged by correction, removal or replacement of the Contractor's defective Work. The Contractor shall not be allowed an extension of the Contract Time because of any delay in performance of the Work attributable to the exercise by the City of the City's right hereunder.

ARTICLE 12 – INDEMNIFICATION

12.1 Disclaimer of Liability: The City shall not at any time, be liable for injury or damage occurring to any person or property from any cause, whatsoever, arising out of Contractor's construction and fulfillment of this Agreement.

12.2 Indemnification: For other, additional good valuable consideration, the receipt and sufficiency of which is hereby acknowledged:

12.2.1 Contractor shall, at its sole cost and expense, indemnify and hold harmless the City, its representatives, employees and elected and appointed officials from or on account of all claims, damages, losses, liabilities and expenses, direct, indirect or consequential including but not limited to fees and charges of engineers, architects, attorneys, consultants and other professionals and court costs arising out of or in consequence of the performance of this Agreement at all trial and appellate levels. Indemnification shall specifically include but not be limited to claims, damages, losses, liabilities and expenses arising out of or from (a) the negligent or defective design of the project and Work of this Agreement; (b) any act, omission or default of the Contractor, its subcontractors, agents, suppliers, employees or laborers; (c) any and all bodily injuries, sickness, disease or death; (d) injury to or destruction of tangible property, including any resulting loss of use; (e) other such damages, liabilities, or losses received or sustained by any person or persons during or on account of any operations connected with the construction of this Project including the warranty period; (f) the use of any improper materials; (g) any construction defect including both patent and latent defects; (h) failure to timely complete the work; (i) the violation of any federal, state, county or City laws, ordinances or regulations by Contractor, its subcontractors, agents, servants, independent contractors or employees; (j) the breach or alleged breach by Contractor of any term of the Agreement, including the breach or alleged breach of any warranty or guarantee.

12.2.2 Contractor agrees to indemnify, defend, and hold harmless the City, its officers, agents and employees, from all damages, liabilities, losses, claims, fines and fees, and from any and all suits and actions of every name and description that may be brought against City, its officers, agents and employees, on account of any claims, fees, royalties, or costs for any invention or patent and/or for the infringement of any and all copyrights or patent rights claimed by any person, firm, or corporation.

12.2.3 Contractor shall pay all claims, losses, liens, settlements or judgments of any nature in connection with the foregoing indemnifications including, but not limited to, reasonable attorney's fees and costs for trials and appeals.

Sample Agreement

12.2.4 If any subcontractor, supplier, laborer, or materialmen of Contractor or any other person directly or indirectly acting for or through Contractor files or attempts to file a mechanic's or construction lien against the real property on which the work is performed or any part or against any personal property or improvements thereon or make a claim against any monies due or to become due from the City to Contractor or from Contractor to a subcontractor, for or on account of any work, labor, services, material, equipment, or other items furnished in connection with the Work or any change order, Contractor agrees to satisfy, remove, or discharge such lien or claim at its own expense by bond, payment, or otherwise within five (5) days of the filing or from receipt of written notice from the City.

Additionally, until such time as such lien or claim is satisfied, removed or discharged by Contractor, all monies due to Contractor, or that become due to Contractor before the lien or claim is satisfied, removed or otherwise discharged, shall be held by City as security for the satisfaction, removal and discharge of such lien and any expense that may be incurred while obtaining the discharge. If Contractor shall fail to do so, City shall have the right, in addition to all other rights and remedies provided by this Agreement or by law, to satisfy, remove, or discharge such lien or claim by whatever means City chooses at the entire and sole cost and expense of Contractor which costs and expenses shall, without limitation, include attorney's fees, litigation costs, fees and expenses and all court costs and assessments, and which shall be deducted from any amount owing to Contractor. In the event the amount due Contractor is less than the amount required to satisfy Contractor's obligation under this, or any other article, paragraph or section of this Agreement, the Contractor shall be liable for the deficiency due the City.

12.2.5 The Contractor and the City agree that Section 725.06(2), Florida Statutes (2021), as may be amended or revised, controls the extent and limits of the indemnification and hold harmless provisions of this Agreement, if any, and that the Parties waive any defects in the wording of this Article that runs afoul of said statutory section.

ARTICLE 13 – CHANGES IN THE WORK

13.1 Without invalidating this Agreement, the City may, at any time or from time-to-time order additions, deletions or revisions in the Work through the issuance of Change Orders. Upon receipt of a Change Order, the Contractor shall proceed with the Work involved. All Work shall be executed under the applicable conditions of the Contract Documents. If any Change Order causes an increase or decrease in the Contract Price or an extension or shortening of the Contract Time, an equitable adjustment will be made as provided in Article 14 or Article 15 on the basis of a claim made by either Party.

13.2 The Project Manager may authorize minor changes in the Work not involving an adjustment in the Contract Price or the Contract Time, which are consistent with the overall intent of the Contract Documents. Such changes must be in writing and signed by the City and the Contractor.

13.3 If notice of any change affecting the general scope of the Work or change in the Contract Price is required by the provisions of any Bond to be given to the Surety, it will be the Contractor's responsibility to so notify the Surety, and the amount of each applicable

Sample Agreement

Bond shall be adjusted accordingly. The Contractor shall furnish proof of such adjustment to the City.

ARTICLE 14 – CHANGE OF CONTRACT PRICE

Change of Contract Price, approved by City, shall be computed as follows:

14.1 Cost of the Work: The term "Cost of the Work" means the sum of all direct costs necessarily incurred and paid by Contractor in the proper performance of the Work. Except as otherwise may be agreed to in writing by the City, these costs shall be in amounts no higher than those prevailing in the City and shall include only the following items and shall not include any of the costs itemized in Paragraph 14.3:

14.1.1 Payroll costs for employees in the direct employ of the Contractor in the performance of the Work under schedules of job classifications agreed upon by the City and the Contractor. Payroll costs for employees not employed full time on the Work shall be apportioned on the basis of their time spent on the Work.

Payroll costs shall include, but not be limited to, salaries and wages plus cost of fringe benefits which shall include social security contributions, unemployment, excise and payroll taxes, worker's compensation, health and retirement benefits, bonuses, sick leave, vacation and applicable holiday pay.

14.1.2 Cost of all materials and equipment furnished and incorporated in the Work, including costs of transportation and storage, and required suppliers and field services. All cash discounts, rebates and refunds and all returns from sale of surplus materials and equipment shall accrue to the City, and the Contractor shall make provisions so that they may be obtained.

14.1.3 Supplemental costs including the following:

14.1.3.1 Cost, including transportation and maintenance of all materials, supplies, equipment, machinery, appliances, office and temporary facilities at the site and hand tools not owned by the workers, which are consumed in the performance of the Work.

14.1.3.2 Rentals of all construction equipment and machinery and the parts whether rented from the Contractor or others in accordance with rental agreements approved by the City, and the costs of transporting, loading, unloading, installation, dismantling and removal. The rental of any such equipment, machinery or parts shall cease when the use is no longer necessary for the Work.

14.1.3.3 Sales, consumer, use or similar taxes related to the Work and for which the Contractor is liable, imposed by laws and regulations.

14.1.3.4 Royalty payments and fees for permits and licenses.

14.1.3.5 The cost of utilities, fuel and sanitary facilities at the Work site.

Sample Agreement

14.1.3.6 Minor expenses such as telegrams, long distance telephone calls, telephone service at the site, expressage and similar petty cash items in connection with the Work.

14.1.3.7 Cost of premiums for additional bonds and insurance required because of changes in the Work.

14.2 The Contract Price may only be increased by a Change Order when Work is modified in accordance with Article 13 and approved by the City in writing. Any claim for an increase in the Contract Price resulting from a Change Order shall be based on written notice delivered to the Project Manager within ten (10) days of the occurrence of the Change Order giving rise to the claim. Notice of the amount of the claim with supporting data shall be included in the Change Order and delivered within twenty (20) days of such occurrence unless Project Manager allows an additional period of time to ascertain accurate cost data. Any change in the Contract Price resulting from any such claim shall be incorporated in the Change Order. **IT IS EXPRESSLY AND SPECIFICALLY AGREED THAT ANY AND ALL CLAIMS FOR CHANGES TO THE CONTRACT PRICE SHALL BE WAIVED IF NOT SUBMITTED IN STRICT ACCORDANCE WITH THE REQUIREMENTS OF THIS SECTION.**

14.3 Not Included in the Cost of the Work: The term "Cost of the Work" shall not include any of the following:

14.3.1 Payroll costs and other compensation of the Contractor's officers executives, principals (of partnership and sole proprietorships), general managers, engineers, architects, estimators, attorneys, auditor, accountants, purchasing and contracting agents, expediters, timekeepers, clerks and other personnel employed by the Contractor whether at the site or in the Contractor's principal or branch office for general administration of the work and not specifically included in the agreed upon schedule of job classifications referred to in Paragraph 14.1.1, all of which are to be considered administrative costs covered by the Contractor's fee.

14.3.2 Expenses of the Contractor's principal and branch offices other than the Contractor's office at the site.

14.3.3 Any part of the Contractor's capital expenses, including interest on the Contractor's capital employed for the Work and charges against the Contractor for delinquent payments.

14.3.4 Cost of premiums for all bonds and for all insurance whether or not the Contractor is required by the Contract Documents to purchase and maintain the same.

14.3.5 Costs due to the negligence of the Contractor, any subcontractor, or anyone directly or indirectly employed by any of them or for whose acts any of them may be liable, including but not limited to, the correction of defective Work, disposal of materials or equipment wrongly supplied and making good any damage to property.

Sample Agreement

14.3.6 Other overhead or general expense costs of any kind and the costs of any item not specifically and expressly included in Paragraph 14.1.

14.4 Basis of Compensation: The Contractor's compensation, allowed to the Contractor for overhead and profit, shall be determined as follows:

14.4.1 A mutually acceptable negotiated fee:

14.4.1.1 For costs incurred under Paragraphs 14.1.1 and 14.1.2, the Contractor's fee shall not exceed five percent (5%).

14.4.1.2 No fee shall be payable on the basis of costs itemized under Paragraphs 14.1.3.1, 14.1.3.2, 14.1.3.3, 14.1.3.4, 14.1.3.5, 14.1.3.6, 14.1.3.7, 14.3.1, 14.3.2, 14.3.3, 14.3.4, 14.3.5 and 14.3.6.

14.4.1.3 The amount of credit to be allowed by the Contractor to the City for any such change which results in a net decrease plus a deduction in the Contractor's fee by an amount equal to five percent (5%) for the net decrease.

14.4.1.4 When both additions and credits are involved in any one change the combined overhead and profit shall be figured on the basis of net increase if any, however, not to exceed five percent (5%) of the agreed compensation. Profit will not be paid on any Work not performed.

14.5 Cost Breakdown Required: Whenever the cost of any Work is to be determined pursuant to this Article, the Contractor will submit in form acceptable to the City an itemized cost breakdown together with supporting documentation. Whenever a change in the Work is to be based upon mutual acceptance of a lump sum, whether the amount is an addition, credit, or no-charge-in-cost, the Contractor shall submit an estimate substantiated by a complete itemized breakdown:

14.5.1 The breakdown shall list quantities and unit prices for materials, labor, equipment and other items of cost.

14.5.2 Whenever a change involves the Contractor and one (1) or more subcontractors and the change is an increase in the agreed compensation, the overhead and profit percentage for the Contractor and each subcontractor shall be itemized separately.

14.6 Time for the City to Approve Extra Work: Any Extra Work in an amount up to and not exceeding a cumulative amount of $25,000 for a specific project can be approved by the City Manager and shall require a written Change Order proposal to be submitted to the Public Works Director for submittal and approval by the City Manager. Extra Work exceeding the cumulative amount of $25,000 for a specific project must be approved by the City Commission and a written Change Order proposal must be submitted to the Public Works Director for submittal and approval by the City Manager and City Commission. No financial or time claim for delay to the project resulting from the Change Order approval process outlined above under Section 14.6 will be allowed.

Sample Agreement

ARTICLE 15 – CHANGE OF THE CONTRACT TIME

15.1 The Contract Time may only be changed by a Change Order. Any claim for an extension in the Contract Time shall be based on written notice delivered to the Project Manager within five (5) days of the occurrence of the event giving rise to the claim. Any change in the Contract Time resulting from any such claim shall be incorporated in a Change Order.

15.2 The Contract Time will be extended in an amount equal to time lost due to delays beyond the control of the Contractor if a claim is made therefore as provided in Paragraph 15.1. Such delays shall include but not be limited to, acts or neglect by the City, or to fires, floods, labor disputes, epidemics, abnormal weather conditions, pandemics, act of Governmental Authority, state of emergency, or acts of God.

15.3 All time limits stated in the Contract Documents are of the essence. The provisions of this Article 15 shall not exclude recovery for damages for delay by the Contractor.

15.4 Delays caused by or resulting from entities, contractors or subcontractors who are not affiliated with the Contractor (non-affiliated Contractors) shall not give rise to a claim by the Contractor for damages for increases in material and/or labor costs. Such entities, contractors and subcontractors include, but are not limited to, the City's contractors and subcontractors, Florida Power and Light Company, AT&T and Florida East Coast Railway, LLC.

15.5 Rights of Various Interests: Whenever work being done by City's forces or by other contractors is contiguous to or within the limits of work covered by this Agreement, the respective rights of the various interests involved shall be established by the Project Manager to secure the completion of the various portions of the Work in general harmony.

ARTICLE 16 – LIQUIDATED DAMAGES

16.1 Upon failure of the Contractor to complete the Work within the time specified for completion, the Contractor shall pay to the City the sum of **500 Hundred Dollars ($500.00)** for each and every calendar day that the completion of the Work is delayed beyond the time specified in this Agreement for completion, as fixed and agreed liquidated damages and not as a penalty, so long as the delay is caused by the Contractor. Should an act of God or the acts or omissions of the City, its agents or representatives, in derogation to the terms of this Agreement cause the delay, the Contractor shall not be responsible for the delay nor liquidated damages. Liquidated damages are fixed and agreed upon between the Parties, recognizing the impossibility of precisely ascertaining the amount of damages that will be sustained by the City as a consequence of such delay and both Parties desiring to obviate any question of dispute concerning the amount of damages and the cost and effect of the failure of the Contractor to complete the Work on time. Liquidated damages shall apply separately to each portion of the Work for which a time of completion is given. The City shall have the right to deduct from or retain any compensation which may be due or which may become due and payable to the Contractor the amount of liquidated damages, and if the amount retained by the City is insufficient to pay in full such liquidated damages, the Contractor shall pay all liquidated damages in full. The Contractor shall be responsible for reimbursing the City, in addition to liquidated damages or other damages for delay,

Sample Agreement

for all costs of engineering, architectural fees, and inspection and other costs incurred in administering the construction of the Project beyond the completion date specified or beyond an approved extension of time granted to the Contractor whichever is later. Delays caused by or resulting from entities, contractors or subcontractors who are not affiliated with the Contractor shall not give rise to a claim by Contractor for damages for increase in material and/or labor costs. Such entities, contractors and subcontractors include, but are not limited to, the City's contractors and subcontractors, Florida Power and Light Company, AT&T, and Florida East Coast Railway, LLC.

16.2 No Extended Damages: For other and additional good and valuable consideration the receipt and sufficiency of which is hereby acknowledged, the Contractor covenants and agrees that in the event of any delay of construction or for any reason, allegation or claim, and notwithstanding the reason of the delay, reason, claim or allegation or who caused them or the construction delay or whether they were caused by the City, that there will be no entitlement to Contractor to or for any direct or indirect financial damages or losses for extended corporate overhead impact, extended project overhead impacts, project support services, mobilization or demobilization or by whatever other label or legal concept or theory and types of names or labels or basis such claims may have, or any business damages or losses of whatever type or nature, and Contractor hereby waives any right to make any such claim or claims. This provision will have application and effect when construction delays are anticipated and agreed upon by both the City and the Contractor.

ARTICLE 17 – SUSPENSION OF WORK AND TERMINATION

17.1 City May Suspend Work: The City may, at any time and without cause, suspend the Work or any portion of the Work for a period of not more than ninety (90) days by notice in writing to the Contractor which shall fix the date on which Work shall be resumed. The Contractor shall resume the Work on the date fixed. The Contractor will be allowed an increase in the Contract Price or an extension of the Contract Time, or both, directly attributable to any suspension, if the Contractor makes a claim as provided in Articles 14 and 15.

17.2 City's Right to Terminate Contract: The City may terminate this Agreement upon fifteen (15) calendar days' written notice upon the occurrence of any one or more of the following events:

17.2.1 If the Contractor makes a general assignment for the benefit of creditors.

17.2.2 If a trustee, receiver, custodian or agent of the Contractor is appointed under applicable law or under Contract, whose appointment or authority to take charge of property of the Contractor is for the purpose of enforcing a lien against such property or for the purpose of general administration of such property for the benefit of the Contractor's creditors.

17.2.3 If Contractor fails to begin the Work within fifteen (15) calendar days after the Project Initiation Date, or fails to perform the Work with sufficient workers and equipment or with sufficient materials to ensure the prompt completion of the Work, or shall perform the Work unsuitably, or cause it to be rejected as defective and unsuitable, or shall discontinue the prosecution of the Work pursuant to the

Sample Agreement

accepted schedule or if Contractor shall fail to perform any material term set forth in the Contract Documents, or from any other cause whatsoever shall not carry on the Work in an acceptable manner, Project Manager may give notice in writing to Contractor and its Surety of such delay, neglect or default, specifying the same.

17.2.4 If the Contractor repeatedly fails to make prompt payments to subcontractors or for labor, material or equipment.

17.2.5 If the Contractor repeatedly disregards proper safety procedures.

17.2.6 If the Contractor disregards any local, state or federal laws or regulations.

17.2.7 If the Contactor otherwise violates any provisions of this Agreement.

17.3 If Contractor, within a period of ten (10) calendar days after such notice, shall not proceed in accordance therewith, the City may exclude the Contractor from the Work site and take the prosecution of the Work out of the hands of the Contractor, and take possession of the Work and all of the Contractor's tools, appliances, construction equipment and machinery at the site and use them without liability to the City for trespass or conversion, incorporate in the Work all materials and equipment stored at the site or for which the City has paid the Contractor but which are stored elsewhere, and finish the Work as the City may deem expedient. In this instance, the Contractor shall not be entitled to receive any further compensation until the Work is finished.

17.3.1 If after notice of termination of Contractor's right to proceed, it is determined for any reason that Contractor was not in default, the rights and obligations of City and Contractor shall be the same as if the notice of termination had been issued pursuant to the Termination for Convenience clause as set forth in Section 17.5 below.

17.3.2 Upon receipt of Notice of Termination pursuant to Sections 17.2 or 17.5, Contractor shall promptly discontinue all affected work unless the Notice of Termination directs otherwise and deliver or otherwise make available to City all data, drawings, specifications, reports, estimates, summaries and such other information as may have been required by the Contract Documents whether completed or in process.

17.4 If the Contractor commits a default due to its insolvency or bankruptcy, the following shall apply:

17.4.1 Should this Agreement be entered into and fully executed by the Parties, funds released and the Contractor (Debtor) files for bankruptcy, the following shall occur:

17.4.1.1 In the event the Contactor files a voluntary petition under 11 U.S.C. 301 or 302, or an order for relief is entered under 11 U.S.C. 303, the Contractor shall acknowledge the extent, validity, and priority of the lien recorded in favor of the City. The Contractor further agrees that in the event of this default, the City shall, at its option, be entitled to seek relief from the automatic stay pursuant to 11 U.S.C. 362. The City shall be entitled to relief from the automatic stay pursuant to 11 U.S.C. 362(d)

Sample Agreement

(1) or (d) (2), and the Contactor agrees to waive the notice provisions in effect pursuant to 11 U.S.C. 362 and any applicable Local Rules of the United States Bankruptcy Court. The Contactor acknowledges that such waiver is done knowingly and voluntarily.

17.4.1.2 Alternatively, in the event the City does not seek stay relief, or if stay relief is denied, the City shall be entitled to monthly adequate protection payments within the meaning of 11 U.S.C. 361. The monthly adequate protection payments shall each be in an amount determined in accordance with the Note and Mortgage executed by the Contractor in favor of the City.

17.4.1.3 In the event the Contractor files for bankruptcy under Chapter 13 of Title 11, United States Code in additional to the foregoing provisions, the Contractor agrees to cure any amounts in arrears over a period not to exceed twenty-four (24) months from the date of the confirmation order, and such payments shall be made in addition to the regular monthly payments required by the Note and mortgage. Additionally, the Contractor shall agree that the City is over secured and, therefore, entitled to interest and attorney's fees pursuant to 11 U.S.C. 506(b). Such fees shall be allowed and payable as an administrative expense. Further, in the event the Contractor has less than five (5) years of payments remaining on the Note, the Contractor agrees that the treatment afforded to the claim of the City under any confirmed plan of reorganization shall provide that the remaining payments shall be satisfied in accordance with the Note, and that the remaining payments or claim shall not be extended or amortized over a longer period than the time remaining under the Note.

17.4.2 Should this Agreement be entered into and fully executed by the parties, and the funds have not been forwarded to Contractor, the following shall occur:

17.4.2.1 In the event the Contractor files a voluntary petition pursuant to 11 U.S.C. 301 or 302, or an order for relief is entered under 11 U.S.C. 303., the Contractor acknowledges that the commencement of a bankruptcy proceeding constitutes an event of default under the terms of this Agreement. Further, the Contractor acknowledges that this Agreement constitutes an executory contract within the meaning of 11 U.S.C. 365. The Contractor acknowledges that this Agreement is not capable of being assumed pursuant to 11 U.S.C. 365(c)(2), unless the City expressly consents in writing to the assumption. In the event the City consents to the assumption, the Contractor agrees to file a motion to assume this Agreement within ten (10) days after receipt of written consent from the City, regardless of whether the bankruptcy proceeding is pending under Chapter 7, 11, or 13 of Title 11 of the United States Code. The Contractor further acknowledges that this Agreement is not capable of being assigned pursuant to 11 U.S.C. 365(b)(1).

17.5 Termination for Convenience: This Agreement may be terminated for convenience in writing by City upon thirty (30) days' written notice to Contractor (delivered by certified mail, return receipt requested) of intent to terminate and the date on which such

Sample Agreement

termination becomes effective. In such case, Contractor shall be paid for all work executed and expenses incurred prior to termination in addition to termination settlement costs reasonably incurred by Contractor relating to commitments which had become firm prior to the termination. Payment shall include reasonable profit for work/services satisfactorily performed. No payment shall be made for profit for work/services which have not been performed.

17.6 Where the Contractor's service has been so terminated by the City, the termination shall not affect any rights of the City against the Contractor then existing or which may thereafter accrue. Any retention or payment of moneys due the Contractor by the City will not release the Contractor from liability.

17.7 The Contractor has no right, authority or ability to terminate the Work except for the wrongful withholding of any payments due the Contractor from the City.

ARTICLE 18 – DISPUTE RESOLUTION

18.1 Resolution of Disputes: Questions, claims, difficulties and disputes of whatever nature which may arise relative to the technical interpretation of the Contract Documents and fulfillment of this Agreement as to the character, quality, amount and value of any work done and materials furnished, or proposed to be done or furnished under, or by reasonof, the Contract Documents which cannot be resolved by mutual agreement of City Project Manager and Contractor shall be submitted to the City Manager or his designee and Contractor's representative for resolution. Prior to any litigation being commenced, for any disputes which remain unresolved, within sixty (60) days after final completion of the Work, the Parties shall participate in mediation to address all unresolved disputes to a mediator agreed upon by the Parties. Should any objection not be resolved in mediation, the Parties retain all their legal rights and remedies provided under the laws of Florida. Failure by a Party to comply in strict accordance with the requirements of this Article, then said Party specifically waives all of its rights provided hereunder, including its rights and remedies under the laws of Florida.

18.1.1 All non-technical administrative disputes (such as billing and payment) shall be determined by Contract Administrator.

18.1.2 During the pendency of any dispute and after a determination thereof, Contractor and Contract Administrator shall act in good faith to mitigate any potential damages including utilization of construction schedule changes and alternate means of construction. During the pendency of any dispute arising under this Agreement, other than termination herein, Contractor shall carry on the Work and adhere to the progress schedule. The Work shall not be delayed or postponed pending resolution of any disputes or disagreements.

18.1.3 For any disputes which remain unsolved, within sixty (60) calendar days after Final Completion of the Work, the Parties shall participate in mediation to address all unresolved disputes. A mediator shall be mutually agreed upon by the Parties. Should any objection not be resolved in mediation, the Parties retain all their legal rights and remedies under applicable law. If a Party objecting to a determination, fails to comply in strict accordance with the requirements of this Article, said Party

Sample Agreement

specifically waives all of its rights provided hereunder, including its rights and remedies under applicable law.

ARTICLE 19 – NOTICES

19.1 All notices required by any of the Contract Documents shall be in writing and shall be deemed delivered upon mailing by certified mail, return receipt requested to the following:

To the City:

City Manager
City of Fort Lauderdale
100 North Andrews Avenue
Fort Lauderdale, Florida 33301-1016

with copy to the:

Project Manager and City Attorney
City of Fort Lauderdale
100 North Andrews Avenue
Fort Lauderdale, Florida 33301-1016

To the Contractor:

_____
_____
_____
_____

ARTICLE 20 – LIMITATION OF LIABILITY

20.1 The City desires to enter into this Agreement only if in so doing the City can place a limit on the City's liability for any cause of action arising out of this Agreement, so that the City's liability for any breach never exceeds the sum of $1,000. For other good and valuable consideration, the receipt and sufficiency of which is hereby acknowledged, the Contractor expresses its willingness to enter into this Agreement with the knowledge that the Contractor's recovery from the City to any action or claim arising from the Agreement is limited to a maximum amount of $1,000, which amount shall be reduced by the amount actually paid by the City to the Contractor pursuant to this Agreement, for any action or claim arising out of this Agreement. Nothing contained in this paragraph or elsewhere in this Agreement is in any way intended either to be a waiver of the limitation placed upon the City's liability as set forth in Section 768.28, Florida Statutes (2021), as may be amended or revised, or to extend the City's liability beyond the limits established in said Section 768.28, Florida Statutes (2021), as may be amended or revised; and no claim or award against the City shall include attorney's fees, investigative costs, expert fees, suit costs or pre-judgment interest.

20.2 No Extended Damages: For other and additional good and valuable consideration the receipt and sufficiency of which is hereby acknowledged, the Contractor covenants and

Sample Agreement

agrees that in the event of any delay of construction or for any reason, allegation or claim, and notwithstanding the reason of the delay, reason, claim or allegation or who caused them or the construction delay or whether they were caused by the City, that there will be no entitlement to Contractor to or for any direct or indirect financial damages or losses for extended corporate overhead impact, extended project overhead impacts, project support services, mobilization or demobilization or by whatever other label or legal concept or theory and types of names or labels or basis such claims may have, or any business damages or losses of whatever type or nature, and Contractor hereby waives any right to make any such claim or claims. This provision will have application and effect when construction delays are anticipated and agreed upon by both the City and the Contractor.

ARTICLE 21 – GOVERNING LAW; WAIVER OF JURY TRIAL

21.1 The Agreement shall be interpreted and construed in accordance with, and governed by, the laws of the state of Florida. The Parties agree that the exclusive venue for any lawsuit arising from, related to, or in connection with this Agreement shall be in the state courts of the Seventeenth Judicial Circuit in and for Broward County, Florida. If any claims arising from, related to, or in connection with this Agreement must be litigated in federal court, the Parties agree that the exclusive venue for any such lawsuit shall be in the United States District Court or United States Bankruptcy Courtfor the Southern District of Florida. **BY ENTERING INTO THIS AGREEMENT, THE PARTIES HEREBY EXPRESSLY WAIVE ANY AND ALL RIGHTS EITHER PARTY MIGHT HAVE TO A TRIAL BY JURY OF ANY ISSUES RELATED TO THIS AGREEMENT. IF A PARTY FAILS TO WITHDRAW A REQUEST FOR A JURY TRIAL IN A LAWSUIT ARISING OUT OF THIS AGREEMENT AFTER WRITTEN NOTICE BY THE OTHER PARTY OF VIOLATION OF THIS SECTION, THE PARTY MAKING THE REQUEST FOR JURY TRIAL SHALL BE LIABLE FOR THE REASONABLE ATTORNEYS' FEES AND COSTS OF THE OTHER PARTY IN CONTESTING THE REQUEST FOR JURY TRIAL, AND SUCH AMOUNTS SHALL BE AWARDED BY THE COURT IN ADJUDICATING THE MOTION.**

ARTICLE 22 – MISCELLANEOUS

22.1 The duties and obligations imposed by this Agreement and the rights and remedies available to the Parties and, in particular but without limitation, the warranties, guaranties and obligations imposed upon the Contractor and all of the rights and remedies available to the City, are in addition to, and are not to be construed in any way as a limitation of, any rights and remedies available to any or all of them which are otherwise imposed or available by laws or regulations, by special warranty or guarantee or by other provisions of the Contract Documents, and the provisions of this Paragraph will be as effective as if repeated specifically in the Contract Documents, and the provisions of this Paragraph will survive final payment and termination or completion of this Agreement.

22.2 The Contractor shall not assign or transfer this Agreement or its rights, title or interests. The obligations undertaken by the Contractor pursuant to this Agreement shall not be delegated or assigned to any other person or firm. Violation of the terms of this Paragraph shall constitute a material breach of Agreement by the Contractor and the

Sample Agreement

City any, at its discretion, cancel this Agreement and all rights, title and interest of the Contractor which shall immediately cease and terminate.

22.3 The Contractor and its employees, volunteers and agents shall be and remain as independent contractor and not agents or employees of the City with respect to all of the acts and services performed by and under the terms of this Agreement. This Agreement shall not in any way be constructed to create a partnership, association or any other kind of joint undertaking or venture between the Parties.

22.4 The City reserves the right to audit the records of the Contractor relating in any way to the Work to be performed pursuant to this Agreement at any time during the performance and term of this Agreement and for a period of three (3) years after completion and acceptance by the City. If required by the City, the Contractor agrees to submit to an audit by an independent certified public accountant selected by the City. The Contractor shall allow the City to inspect, examine and review the records of the Contractor at any and all times during normal business hours during the term of this Agreement.

22.5 The remedies expressly provided in this Agreement to the City shall not be deemed to be exclusive but shall be cumulative and in addition to all other remedies in favor of the City now or later existing at law or in equity.

22.6 Should any part, term or provisions of this Agreement be decided by the courts to be invalid, illegal or in conflict with any state or federal law, the validity of the remaining portion or provision shall not be affected.

22.7 Prohibition Against Contracting With Scrutinized Companies: Subject to *Odebrecht Construction, Inc., v. Prasad*, 876 F.Supp.2d 1305 (S.D. Fla. 2012), *affirmed*, *Odebrecht Construction, Inc., v. Secretary, Florida Department of Transportation*, 715 F.3d 1268 (11th Cir. 2013), with regard to the "Cuba Amendment," the Contractor certifies that it is not on the Scrutinized Companies with Activities in Sudan List or the Scrutinized Companies with Activities in the Iran Petroleum Energy Sector List, and that it does not have business operations in Cuba or Syria, as provided in Section 287.135, Florida Statutes (2021), as may be amended or revised. The Contractor certifies that it is not on the Scrutinized Companies that Boycott Israel List created pursuant to Section 215.4725, Florida Statutes (2021), as may be amended or revised, and that it is not engaged in a boycott of Israel. The City may terminate this Agreement at the City's option if the Contractor is found to have submitted a false certification as provided under subsection (5) of Section 287.135, Florida Statutes (2021), as may be amended or revised, or been placed on the Scrutinized Companies with Activities in Sudan List or the Scrutinized Companies with Activities in the Iran Petroleum Energy Sector List or the Scrutinized Companies that Boycott Israel List created pursuant to Section 215.4725, Florida Statutes (2021), as may be amended or revised, or is engaged in a boycott of Israel or has been engaged in business operations in Cuba or Syria, as defined in Section 287.135, Florida Statutes (2021), as may be amended or revised.

By submitting a proposal or response, the company, principals, or owners certify that it is not listed on the Scrutinized Companies with Activities in Sudan List or listed on the Scrutinized Companies with Activities in the Iran Petroleum Energy Sector List or is engaged in business operations in Cuba or Syria.

Sample Agreement

22.8 Public Entity Crimes: In accordance with the Public Crimes Act, Section 287.133, Florida Statutes (2021), as may be amended or revised, a person or affiliate who is a contractor, consultant or other provider, who has been placed on the convicted vendor list following a conviction for a public entity crime may not submit a bid on a contract to provide any goods or services to the City, may not submit a bid on a contract with the City for the construction or repair of a public building or public work, may not submit bids on leases of real property to the City, may not be awarded or perform work as a contractor, supplier, subcontractor, or consultant under a contract with the City, and may not transact any business with the City in excess of the threshold amount provided in Section 287.017, Florida Statutes (2021), as may be amended or revised, for category two purchases for a period of thirty-six (36) months from the date of being placed on the convicted vendor list. Violation of this section by Contractor shall result in cancellation of the City purchase and may result in Contractor debarment.

22.9 Attorney Fees: If City or Contractor incurs any expense in enforcing the terms of this Agreement through litigation, the prevailing Party in that litigation shall be reimbursed for all such costs and expenses, including but not limited to court costs, and reasonable attorney fees incurred during litigation.

22.10 Public Records

IF THE CONTRACTOR HAS QUESTIONS REGARDING THE APPLICATION OF CHAPTER 119, FLORIDA STATUTES, TO THE CONTRACTOR'S DUTY TO PROVIDE PUBLIC RECORDS RELATING TO THIS AGREEMENT, CONTACT THE CUSTODIAN OF PUBLIC RECORDS AT PRRCONTRACT@FORTLAUDERDALE.GOV, 954-828-5002, CITY CLERK'S OFFICE, 100 N. ANDREWS AVENUE, FORT LAUDERDALE, FLORIDA 33301.

Contractor shall:

1. Keep and maintain public records required by the City in order to perform the service.

2. Upon request from the City's custodian of public records, provide the City with a copy of the requested records or allow the records to be inspected or copied within a reasonable time at a cost that does not exceed the cost provided in Chapter 119, Florida Statutes (2021), as may be amended or revised, or as otherwise provided by law.

3. Ensure that public records that are exempt or confidential and exempt from public records disclosure requirements are not disclosed except as authorized by law for the duration of the contract term and following completion of this Agreement if the Contractor does not transfer the records to the City.

4. Upon completion of the Agreement, transfer, at no cost, to the City all public records in possession of the Contractor or keep and maintain public records required by the City to perform the service. If the Contractor transfers all public records to the City upon completion of this Agreement, the Contractor shall destroy any duplicate public

Sample Agreement

records that are exempt or confidential and exempt from public records disclosure requirements. If the Contractor keeps and maintains public records upon completion of this Agreement, the Contractor shall meet all applicable requirements for retaining public records. All records stored electronically must be provided to the City, upon request from the City's custodian of public records, in a format that is compatible with the information technology systems of the City.

[THIS SPACE WAS INTENTIONALLY LEFT BLANK]

Sample Agreement

Project Name
(Contractor)
Project #

CITY

IN WITNESS OF THE FOREGOING, the Parties have set their hands and seals the day and year first written above.

CITY OF FORT LAUDERDALE, a Florida municipal corporation

By: _____
CHRISTOPHER J. LAGERBLOOM
City Manager

Date: _____

ATTEST:

By: _____
DAVID R. SOLOMAN
City Clerk

Approved as to Legal Form:
Alain E. Boileau, City Attorney

By:_____
RHONDA MONTOYA HASAN
Assistant City Attorney

Sample Agreement

CONTRACTOR

WITNESSES:

CONTRACTOR.,
a Florida company/corporation.

_____ By:_____

_____ Print Name:_____
Print Name

Title:_____

ATTEST:

_____

_____
Print Name

By:_____
Secretary

(CORPORATE SEAL)

STATE OF _____:

COUNTY OF _____:

The foregoing instrument was acknowledged before me by means of ☐ physical presence or ☐ online notarization, this _____ day of _____, 2021, by _____, (NAME OF AUTHORIZED OFFICER) as _____ (TITLE OF AUTHORIZED OFFICER), for _____ (NAME OF COMPANY), a Florida _____(TYPE OF COMPANY).

_____
(Signature of Notary Public - State of Florida)

_____
(Print, Type, or Stamp Commissioned Name of Notary Public)

Personally Known_____ OR Produced Identification_____
Type of Identification Produced: _____

Sample Agreement

CITY OF FORT LAUDERDALE
CONTRACT AND SPECIFICATIONS PACKAGE

PROJECT NO. 12745

STORMWATER MASTER PLAN MODELING AND DESIGN IMPLEMENTATION

RIVER OAKS PUMP STATIONS

SPECIFICATIONS VOLUME 1 OF 2

Issued on Behalf of:
The Public Works Department
Engineering Division
100 North Andrews Avenue
Fort Lauderdale, FL 33301

Juan Carlos Samuel, E.I., ENV SP
Project Manager II

Fausto Vargas
SENIOR PROCUREMENT SPECIALIST
Telephone: (954) 828-6167 E-mail: fvargas@fortlauderdale.gov

TABLE OF CONTENTS

Description **Pages**

I. BID INFORMATION

Invitation to Bid ..... ITB-1 thru ITB-2
Instruction to Bidders .....IB-1 thru IB-6
Special Conditions ..... SC-1 thru SC-6

II. CONSTRUCTION AGREEMENT (SAMPLE)..... C-1 thru C-39

III. GENERAL CONDITIONS .....GC-1 thru GC-10

IV. SPECIFICATIONS

DIVISION 1 – GENERAL REQUIREMENTS

01005 Intent of Drawings and Specifications
01010 Summary of Work
01025 Measurement and Payment
01070 Abbreviations
01090 Reference Standards
01200 Project Meetings
01300 Submittals
Supplement – Hazen Contractors Procore Guidelines
01312 Field Engineering
01320 Project Record Documents
Supplement – Data Dictionary
01400 Quality Control
01510 Temporary Utilities
01520 Construction Constraints
01530 Protection of Existing Facilities
01550 Site Access and Storage
01560 Temporary Environmental Controls
Supplement – Standard Manatee Conditions
01580 Project Notification
Supplement – Construction Sign Sample
Supplement 2 – Door Hanger Notification Template
01590 Field Office, Equipment and Services
01600 Materials and Equipment
01660 Equipment Testing and Startup
01700 Project Closeout

DIVISION 2 - SITE CONSTRUCTION

02015 Mobilization and Demobilization
02100 Erosion and Sediment Control – Stormwater Pollution Prevention
02200 Site Preparation

02220 Demolition
02222 Excavation and Backfill for Utilities
02224 Excavation and Backfill for Structures
02240 Dewatering
02281 Termite Control
02363 Auger Cast Piles
02369 Steel Sheet Piling
02371 Geotextiles
02468 Pile Load Tests
02481 Tree Relocation and Protection
02630 Storm Drain Facilities
02667 Hydraulic Structures Testing
02710 Limerock Base
02772 Asphalt Concrete Pavement
02920 Sodding
02930 Landscape Work

DIVISION 3 - CONCRETE

03100 Concrete Formwork
03200 Concrete Reinforcement
03290 Joints in Concrete
03300 Cast-in-Place Concrete
03315 Grout
03350 Concrete Finishes
03370 Concrete Curing
03400 Precast Concrete, General
03415 Precast Prestressed Concrete Hollow Core Planks
03480 Precast Concrete Manholes, Handholes and Vaults

DIVISION 4 - MASONRY

04220 Concrete Block Masonry

DIVISION 5 - METALS

05010 Metal Materials
05035 Galvanizing
05050 Metal Fastening
05120 Structural Steel
05140 Structural Aluminum
05500 Metal Fabrications
05510 Metal Stairs
05515 Ladders
05520 Handrails and Railings
05531 Grating, Floor Plates and Access Hatches
05540 Castings
05830 Bearing Devices and Anchoring

DIVISION 6 – WOODS AND PLASTICS

06100 Rough Carpentry

DIVISION 7 – THERMAL AND MOISTURE PROTECTION

07160 Bituminous Dampproofing
07190 Vapor Barrier
07240 Exterior Insulation Finish System
07270 Firestopping
07510 Built Up Bituminous Roofing
07600 Flashing and Roofing Accessories
07920 Sealants and Caulking

DIVISION 8 – DOORS AND WINDOWS

08110 Steel Doors and Frames
08710 Finish Hardware

DIVISION 9 - FINISHES

09900 Painting

DIVISION 10 - SPECIALTIES

10400 Identifying Devices
10522 Fire Extinguishers

DIVISION 11 - EQUIPMENT

11000 Equipment General Provisions
11100 Pumps, General
11105 Submersible Axial Flow Pumps, Propeller and Mixed Flow
11420 Mechanical Screens

DIVISION 12 – FURNISHINGS (NOT USED)

DIVISION 13 – SPECIAL CONSTRUCTION (NOT USED)

DIVISION 14 – CONVEYING SYSTEMS (NOT USED)

DIVISION 15 – MECHANICAL

15000 Basic Mechanical Requirements
15006 Ductile Iron Pipe
15008 PVC Non-Pressure Pipe
15009 PVC Pressure Pipe
15020 Pipe Supports
15030 Piping and Equipment Identification Systems
15095 Valves, General
15100 Valve Operators
15104 Ball Valves
15114 Miscellaneous Valves and Appurtenances
15202 Flap Gates
15500 Basic HVAC Requirements
15553 HVAC Copper and Brass Pipe
15598 Metallic Ductwork and Duct Accessories
15750 Air Conditioning Units
15990 HVAC Testing, Adjusting, and Balancing
15995 Pipeline Testing and Disinfection

DIVISION 16 – ELECTRICAL

16000 Basic Electrical Requirements
16055 Power System Studies
16111 Conduit
16118 Underground Electrical
16123 Low Voltage Wire and Cable
16130 Boxes
16141 Wiring Devices
16170 Grounding and Bonding
16190 Supporting Devices
16195 Electrical - Identification
16426 Low Voltage Switchboards
16440 Safety Switches
16461 Dry Type Distribution Transformers
16470 Panelboards
16476 Enclosed Circuit Breakers
16480 Low Voltage Electric Motors
16481 Individual Motor Controllers
16496 Automatic Transfer Switch
16500 Lighting
16620 Packaged Engine Generator Systems
16670 Lighting Protection Systems
16902 Electric Controls and Relays

DIVISION 17 – INSTRUMENTATION

17000 Control and Information System Scope and General Requirements
17015 Preliminary Design Review
17030 Control and Information System Submittals

17040	Control and Information System Training Requirements
17050	Tools, Supplies, and Spare Parts – General
17060	Signal Coordination Requirements
17070	Control and Information System Testing – General
17071	Factory Acceptance Test
17072	Field Testing
17073	Final Acceptance Test
17080	Quality Assurance
17100	Control and Information System Hardware – General
17120	Programmable Logic Controllers
17125	Operator Interface Units
17135	Cellular Communications System
17170	Mobile Workstation Computers
17185	Networks
17190	Uninterruptible Power Systems
17500	Enclosures, General
17510	Cabinets and Panels
17550	Panel Instruments and Accessories
17560	Surge Protection Devices
17600	Unpowered Instruments, General
17670	Level Switches (Suspended Float Type)
17698	Instrumentation and Control System Accessories
17700	Powered Instruments, General
17745	Radar Level Measurement Systems
17910	Instrument Schedule
17920	Control System Input/Output Schedule
17950	Functional Control Descriptions

APPENDIX

Geotechnical Services Report by RADISE International dated August 1, 2018

Note: The following documents are available electronically for completion and documents must be returned with your bid along with your bid security, proof of insurance, and proof of required licenses/certifications.

CITB Prime Contractor ID Form
ITB Questionnaire Sheets
CITB Local Business Preference
CITB Trench Safety
CITB Non-Collusion Statement
CITB Contract Payment Method
CITB Construction Bid Certification

Engineering Index Sheet for Specifications[1]
General, Civil and Mechanical

Project Name: City of Fort Lauderdale Project No. 12745 Stormwater Improvements River Oaks Pump Stations	**Project Address:** River Oaks Preserve 2117 SW 19th Avenue Fort Lauderdale, FL 33315
Person in Responsible Charge: Jennifer McMahon, PE Florida PE No. 56800 4000 Hollywood Blvd., Suite No. 750N Hollywood, Florida 33021	**Specification Responsibility:** Division 1 Division 2 Division 9 Division 10 Division 11 Division 15
Duly Authorized Engineering Business: Hazen and Sawyer, PC 4000 Hollywood Blvd., Suite No. 750N Hollywood, Florida 33021	
_____ Jennifer McMahon, PE No. 56800	

[1] This sheet complies with the requirements of Florida Administrative Code 61G15-23.001(4)(b).

Engineering Index Sheet for Specifications[1]
Instrumentation / Controls

Project Name: City of Fort Lauderdale Project No. 12745 Stormwater Improvements River Oaks Pump Stations	**Project Address:** River Oaks Preserve 2117 SW 19th Avenue Fort Lauderdale, FL 33315
Person in Responsible Charge: Keith R. Dinnen, PE Florida PE No. 78757 4000 Hollywood Blvd., Suite No. 750N Hollywood, Florida 33021	**Specification Responsibility:** Division 13 Division 17
Duly Authorized Engineering Business: Hazen and Sawyer, PC 4000 Hollywood Blvd., Suite No. 750N Hollywood, Florida 33021 Certificate of Authorization No.: 2771	
_____ Keith R. Dinnen, PE No. 78757	

[1] This sheet complies with the requirements of Florida Administrative Code 61G15-23.001(4)(b).

Engineering Index Sheet for Specifications[1]
Structural

Project Name: City of Fort Lauderdale Project No. 12745 Stormwater Improvements River Oaks Pump Stations	**Project Address:** River Oaks Preserve 2117 SW 19th Avenue Fort Lauderdale, FL 33315
Person in Responsible Charge: Jean Paul Silva, PE Florida PE No. 66522 4000 Hollywood Blvd., Suite No. 750N Hollywood, Florida 33021	**Specification Responsibility:** Division 3 Division 4 Division 5 Division 6 Division 7 Division 8
Duly Authorized Engineering Business: Hazen and Sawyer, PC 4000 Hollywood Blvd., Suite No. 750N Hollywood, Florida 33021	
_____ Jean Paul Silva, PE No. 66522	

[1] This sheet complies with the requirements of Florida Administrative Code 61G15-23.001(4)(b).

Engineering Index Sheet for Specifications[1]
Electrical

Project Name: City of Fort Lauderdale Project No. 12745 Stormwater Improvements River Oaks Pump Stations	**Project Address:** River Oaks Preserve 2117 SW 19th Avenue Fort Lauderdale, FL 33315
Person in Responsible Charge: Patrick Bowles, PE Florida PE No. 89123 4000 Hollywood Blvd., Suite No. 750N Hollywood, Florida 33021	**Specification Responsibility:** Division 16
Duly Authorized Engineering Business: Hazen and Sawyer, PC 4000 Hollywood Blvd., Suite No. 750N Hollywood, Florida 33021	
_____ Patrick Bowles, PE No. 89123	

[1] This sheet complies with the requirements of Florida Administrative Code 61G15-23.001(4)(b).

TECHNICAL SPECIFICATIONS

DIVISION 1 – GENERAL REQUIREMENTS

SECTION 01005

INTENT OF DRAWINGS AND SPECIFICATIONS

PART 1 – GENERAL

1.01 THE REQUIREMENT

A. Intent of specifications and drawings is to cover an installation complete in every respect. It is not intended to give every detail on drawings and in specifications. The City will not be responsible for absence of any detail which the Contractor may require, nor for any special construction which may be found necessary as work progresses. If an item is either indicated or specified, it shall be considered sufficient for inclusion of said item in contract. The Contractor shall furnish and install materials and equipment usually furnished with such systems, and as needed to complete an operating installation, whether mentioned or not, which are customary to its trade.

B. Incidental accessories not usually shown or specified but which are necessary for the proper installation and operation shall be included in work without additional cost to the City, the same as if herein specified.

C. Any apparatus, appliance, material or work not shown on the drawings but mentioned in the specifications, or vice versa, or any incidental accessories necessary to make the work complete and ready for operation, shall be furnished, delivered, and installed by the Contractor without additional cost to the City.

D. The City's or Engineer's interpretation of drawings and specifications shall be final and binding upon Contractor.

E. The Contractor shall visit site prior to submitting bid, and thoroughly investigate and verify all conditions under which work shall be performed.

PART 2 – PRODUCTS

(NOT USED)

PART 3 – EXECUTION

(NOT USED)

- END OF SECTION -

SECTION 01010

SUMMARY OF WORK

PART 1 – GENERAL

1.01 THE REQUIREMENT

A. The Work to be performed under this Contract shall consist of furnishing and installation of all tools, equipment, materials, supplies, manufactured articles, transportation and services, including fuel, power, water and essential communications for the performance of all labor, work and/or other operations as required for the fulfillment of the Contract in strict accordance with the Contract Documents. The Work shall be complete, and all work, materials, and services not expressly indicated or called for in the Contract Documents, which may be necessary for the complete and proper construction of the Work in good faith, shall be provided by the Contractor as though originally so indicated, at no increase in cost to the City.

B. The Contractor shall perform all work required for such construction in accordance with the Contract Documents and subject to the terms and conditions of the Contract, complete and ready for use.

C. The work shall be performed at the River Oaks Stormwater Preserve, located at 2117 SW 19th Avenue in Fort Lauderdale, Florida. The principal features of the Work to be performed under this Contract include site, civil, mechanical, structural, architectural, electrical, instrumentation, ventilation and air conditioning, and all related work associated with the Stormwater Improvements River Oaks Pump Stations project. This work includes the construction and installation of the River Oaks Inlet stormwater station including intake structure, wet well, effluent box, electrical platform, and all associated piping, equipment, and appurtenances for a fully working and functioning station. This work includes the construction of the River Oaks Outfall stormwater station including intake structure, wet well, effluent box, electrical building, generator, and Florida Power and Light transformer pad and all associated piping, equipment, and appurtenances for a fully working and functioning station. Work also included in the Contract is all material, labor, and equipment for demolition, disposal, maintenance of operations during construction, erosion and sedimentation control, site restoration, removal and disposal of contaminated soils and groundwater, removal and replacement of unsuitable soils, startup and testing of the new facilities, operation and maintenance manuals, record documents, test equipment and all other appurtenant and miscellaneous work required for completion of the work, in accordance with the Contract Documents and not included in other bid items.

1.02 CONTRACT DOCUMENTS

A. The Work to be done is shown on the drawings entitled City of Fort Lauderdale Stormwater Improvements River Oaks Pump Stations. The numbers and titles of all drawings appear on the index sheets of the drawings. All drawings so enumerated shall be considered an integral part of the Contract Documents as defined herein.

B. Certain document sections refer to Divisions of the Contract Specifications. Sections are each individually numbered portions of the Specifications (numerically) such as 05010,

11100, 15115, etc. The term Division is used as a convenience term meaning all Sections within a numerical grouping. For example, Division 2 would thus include Sections 02000 through 02999 and would mean all site work specifications.

C. Contractor shall note that if there is a conflict between any of the Contract Documents the more stringent requirement shall apply and shall be furnished at no additional cost to the City.

1.03 GENERAL ARRANGEMENT

A. Drawings indicate the extent and general arrangement of the work. If any departures from the Drawings are deemed necessary by the Contractor to accommodate the materials and equipment proposed to be furnished, details of such departures and reasons therefore shall be submitted as soon as practicable to the City for approval. No such departures shall be made without the prior written approval of the City. Approved changes shall be made without additional cost to the City for this work or related work under other Contracts of the Project.

B. The specific equipment proposed for use by the Contractor on the project may require changes in structures, auxiliary equipment, piping, electrical, mechanical, controls or other work to provide a complete satisfactory operating installation. The Contractor shall submit to the City, for approval, all necessary Drawings and details showing such changes to verify conformance with the overall project structural and architectural requirements and overall project operating performance. The Bid Price shall include all costs in connection with the preparation of new drawings and details and all changes to construction work to accommodate the proposed equipment, including increases in the costs of other Contracts.

1.04 CONSTRUCTION PERMITS AND ENCROACHMENTS

A. The Contractor shall obtain, keep current and pay all fees for any necessary construction permits from those authorities, agencies, or municipalities having jurisdiction over land areas, utilities, or structures which are located within the Contract limits and which will be occupied, encountered, used, or temporarily interrupted by the Contractor's operations unless otherwise stated. Record copies of all permits shall be furnished to the Engineer and the City.

B. When construction permits are accompanied by regulations or requirements issued by a particular authority, agency or municipality, it shall be the Contractor's responsibility to familiarize himself and comply with such regulations or requirements as they apply to his operations on this Project.

C. Agencies requiring permits for this project may include, but are not limited to:

1. City of Fort Lauderdale Department of Sustainable Development
2. City of Fort Lauderdale Transportation and Mobility
3. South Florida Water Management District
4. Florida Department of Environmental Protection
5. Broward County Environmental Protection and Growth Management Department

1.05 ADDITIONAL ENGINEERING SERVICES

A. In the event that the Engineer is required to provide additional engineering services as a result of substitution of materials or equipment which are not "or equal" by the Contractor, or changes by the Contractor in dimension, weight, power requirements, etc., of the equipment and accessories furnished, or if the Engineer is required to examine and evaluate any changes proposed by the Contractor for the convenience of the Contractor, then the Engineer's charges in connection with such additional services shall be charged to the Contractor by the City.

B. Structural design shown on the Contract Drawings is based upon typical weights for major items of equipment as indicated on the Contract Drawings and specified. If the equipment furnished differs from that specified in the Contract Documents such that actual weight exceeds the weight of specified equipment, the Contractor shall assume the responsibility for all costs of redesign and for any construction changes required to accommodate the equipment furnished, including the Engineer's expenses in connection therewith, provided that the original weight assumptions were correct.

C. In the event that the Engineer is required to provide additional engineering services as a result of Contractor's errors, omissions, or failure to conform to the requirements of the Contract Documents, or if the Engineer is required to examine and evaluate any changes proposed by the Contractor solely for the convenience of the Contractor, then the Engineer's charges in connection with such additional services shall be charged to the Contractor by the City and shall be deducted from monies due the Contractor.

1.06 ADDITIONAL EXPENSES

A. In the event the Work of this Contract is not completed within the time set forth in the Contract or within the time to which such completion may have been extended in accordance with the Contract Documents, the additional engineering or inspection charges incurred by the City may be charged to the Contractor and deducted from the monies due him. Extra work or supplemental Contract work added to the original Contract, as well as extenuating circumstances beyond the control of the Contractor, will be given due consideration by the City before assessing engineering and inspection charges against the Contractor.

B. Charges for additional City's expenses shall be independent of any liquidated damages assessed in accordance with the Contract.

1.07 TIME OF WORK

A. Unless otherwise specifically permitted, the normal time of work under this Contract is limited to eight (8) hours per day, 40 hours per week, and shall generally be between the hours noted in Article 8.10 of the Contract Documents, Monday through Friday. Work beyond these hours or on City holidays will result in additional expense to the City. Any expenses and/or damages arising from the Contractor's operations beyond the hours and days specified above shall be borne by the Contractor. This provision does not apply to shut down operations required by construction sequencing and constraints to maintain the existing facilities in operation. The Contractor may elect to work beyond these hours or on holidays or weekends provided that all costs incurred by the City for additional engineering shall be borne by the Contractor and approval has been obtained from the City. The City

shall deduct the cost of additional engineering costs and overtime from monies due the Contractor.

B. If it shall become imperative to perform work at night, weekends or holidays the City shall be informed in writing a reasonable time in advance of the beginning of such work (minimum of 10 days, except in an emergency situation as determined by the Contractor). Temporary lighting and all other necessary facilities for performing and inspecting the work shall be provided and maintained by the Contractor.

C. Unless otherwise specifically permitted, all work that would be subject to damage shall be stopped during inclement, stormy weather. Only such work as will not suffer injury to workmanship or materials will be permitted. Contractor shall carefully protect his work against damage or injury from the weather.

1.08 SURVEYS AND LAYOUT

A. All work under this Contract shall be constructed in accordance with the lines and grades shown on the Drawings or as directed by the Engineer. Elevation of existing ground and appurtenances are believed to be reasonably correct but are not guaranteed to be absolute and therefore are presented only as an approximation. Any error or apparent discrepancy in the data shown or omissions of data required for accurately accomplishing the stake out survey shall be referred immediately to the Engineer for interpretation or correction.

B. All survey work for construction control purposes shall be made by the Contractor at his expense. The Contractor shall provide a Florida Licensed Surveyor as Chief of Party, competently qualified employees, all necessary instruments, stakes, and other material to perform the work.

C. Contractor shall establish all baselines for the location of the principal component parts of the work together with a suitable number of bench marks and batter boards adjacent to the work. Based upon the information provided by the Contract Drawings, the Contractor shall develop and make all detail surveys necessary for construction, including slope stakes, batter boards, stakes for all working points, lines and elevations.

D. Contractor shall have the responsibility to carefully preserve the bench marks, reference points and stakes, and in the case of destruction thereof by the Contractor or resulting from his negligence, the Contractor shall be charged with the resulting expense and damage and shall be responsible for any mistakes that may be caused by the unnecessary loss or disturbance of such bench marks, reference points and stakes. Contractor shall provide a signed and sealed affidavit by his surveyor stating that they have verified all bench marks.

E. Existing or new control points, property markers and monuments that will be or are destroyed during the normal causes of construction shall be reestablished by the Contractor and all reference ties recorded therefore shall be furnished to the Engineer. All computations necessary to establish the exact position of the work shall be made and preserved by the Contractor.

F. The Engineer may check all or any portion of the work and the Contractor shall afford all necessary assistance to the Engineer in carrying out such checks. Any necessary corrections to the work shall be immediately made by the Contractor. Such checking by the

Engineer shall not relieve the Contractor of any responsibilities for the accuracy or completeness of his work.

G. At completion of the work, the Contractor shall furnish As-Built Drawings and As-Built GID Database updates indicating the final layout of all structures, roads, existing benchmarks, etc. The As-Built Drawings and As-Built GIS database updates shall be in accordance with the requirements of Section 01320, Project Record Documents.

1.09 SUBSURFACE DATA

A. Subsurface data are offered in good faith solely for placing the Bidder in receipt of all information available to the City and in no event is to be considered as part of the Contract Documents.

B. The Bidder must interpret such subsurface data according to his own judgment and acknowledge that he is not relying upon the same as accurately describing the subsurface conditions, which may be found to exist.

1. The test boring logs present factual information of the subsurface conditions at the specific test boring location only. The Bidder should not consider, or conclude, that the subsurface conditions will be consistent between test boring locations.

C. In making this data available, the City makes no guarantee, either expressed or implied, as to their accuracy or to the accuracy of any interpretation thereof.

D. Subsurface data for this project can be found in the Appendix.

1.10 OPENINGS, CHASES, SLEEVES, INSERTS, ETC.

A. The Contractor shall provide all openings, chases, etc., in the work to fit his own work and that of any other contractors. All such openings or chases shown on the Drawings, or reasonably implied thereby, or as confirmed or modified by shop, setting, or erecting Drawings approved by the Engineer, shall be provided by the Contractor and/or Subcontractors.

B. Where pipes or conduits are to pass through slabs or walls, or where equipment frames or supports are to be installed as an integral part of an opening, the sleeves, opening forms or frames shall be furnished by the installer of the pipes, conduits, or equipment, but shall be placed by the Subcontractor. Where hanger inserts and similar items are to be installed as an integral part of a slab or wall, they shall be furnished by the installer of the pipe or other equipment requiring the hanger, but shall be verified by the Contractor and incorporated into the concrete placement.

C. When requested by the Contractor, the installer of the pipes, conduit, or equipment, including those Subcontractors who require openings or chases in slabs and walls for passage of ducts, mounting of equipment, etc., shall furnish all necessary information, instructions, and materials to effect accurate installation of the required openings, chases, sleeves, frames, inserts, etc. When such items are secured in position, and just prior to construction of the surrounding slab or wall, the Subcontractor for whom the items are installed shall ascertain the proper number, locations, and settings thereof; and the

Contractor shall schedule his operations so as to provide a reasonable opportunity and time interval for such inspection.

D. Any costs resulting from correction of defective, ill-timed, or mislocated work, or for subsequent work which becomes necessary because of omitted openings, chases, sleeves, frames, inserts, etc., shall be borne by the Contractor responsible therefor. To this end, no Contractor shall arbitrarily cut, drill, alter, damage, or otherwise endanger the work of another Contractor. The nature and extent of any corrective or additional work shall be subject to the approval of the Engineer following consultation with the Contractors involved.

1.11 FIRE PROTECTION

A. Contractor shall take all necessary precautions to prevent fires at or adjacent to the work, buildings, etc., and shall provide adequate facilities for extinguishing fires which do occur. Fires shall not be permitted.

B. When fire or explosion hazards are created in the vicinity of the work as a result of the locations of fuel tanks, or similar hazardous utilities or devices, the Contractor shall immediately alert the local Fire Marshal and the City of such tank or device. The Contractor shall exercise all safety precautions and shall comply with all instructions issued by the Fire Marshal and shall cooperate with the City to prevent the occurrence of fire or explosion.

1.12 FIRST AID FACILITIES AND ACCIDENTS

A. First Aid Facilities

1. The Contractor shall provide at the site such equipment and facilities as are necessary to supply first aid to any of his personnel who may be injured in connection with the work.

B. Accidents

1. The Contractor shall promptly report, in writing, to the City all accidents whatsoever out of, or in connection with, the performance of the work, whether on or adjacent to the site, which cause death, personal injury or property damage, giving full details and statements of witnesses.

2. If death, serious injuries, or serious damages are caused, the accident shall be reported immediately by telephone or messenger to both the City and the Engineer.

3. If any claim is made by anyone against the Contractor or a Subcontractor on account of any accidents, the Contractor shall promptly report the facts, in writing, to the City, giving full details of the claim.

1.13 SAFETY AND HEALTH REQUIREMENTS

A. The Contractor shall comply in every respect with all Federal, State and local safety and health regulations. Copies of the Federal Regulations may be obtained from the U.S. Department of Labor, Occupational Safety and Health Administration.

B. The Contractor shall provide all barricades and flashing warning lights or other devices necessary to warn pedestrians and area traffic.

C. Personnel working in contact with sewage flow or surfaces carrying wastewaters or sludges shall be immunized as recommended by the Broward County Health Department.

1.14 ULTIMATE DISPOSITION OF CLAIMS BY ONE CONTRACTOR ARISING FROM ALLEGED DAMAGE BY ANOTHER CONTRACTOR

A. During the progress of the work, other Contractors may be engaged in performing other work or may be awarded other Contracts for additional work on this project. In that event, the Contractor shall coordinate the work to be done hereunder with the work of such other Contractors and the Contractor shall fully cooperate with such other Contractors and carefully fit its own work to that provided under other Contracts as may be directed by the City. The Contractor shall not commit or permit any act which will interfere with the performance of work by any other Contractor.

B. If the Engineer determines that the Contractor is failing to coordinate his work with the work of the other Contractors as the City directed, then the City shall have the right to withhold any payments otherwise due hereunder until the Contractor completely complies with the City's directions.

C. If the Contractor notifies the Engineer in writing that another Contractor is failing to coordinate his work with the work of this Contract as directed, the Engineer will promptly investigate the charge. If the Engineer finds it to be true, the City will promptly issue such directions to the other Contractor with respect thereto as the situation may require and issue a response to the Contractor in writing. The City, the Engineer, nor any of their agents shall not, however, be liable for any damages suffered by the Contractor by reason of the other Contractor's failure to promptly comply with the directions so issued by the City, or by reason of another Contractor's default in performance, it being understood that the City does not guarantee the responsibility or continued efficiency of any Contractor.

1.15 LIMITS OF WORK AREA

A. The Contractor shall provide for the storage of equipment, materials, and accumulated construction debris off-site. Responsibility for protection and safekeeping of equipment and materials at or near the sites will be solely that of the Contractor and no claim shall be made against the City by reasons of any act of an employee or trespasser.

B. The Contractor shall secure all storage areas used for the project work. If required, Contractor shall submit a temporary fencing plan and permits for all storage areas used for the project work.

C. The Contractor shall provide a phasing and staging plan that results in minimal impact to the site and nearby residences and provides for continual pedestrian and vehicular access.

1.16 WEATHER CONDITIONS

A. No work shall be done when the weather is unsuitable. The Contractor shall take necessary precautions (in the event of impending severe weather, including hurricanes, tropical storms or major rain/wind storms) to protect all work, materials, or equipment from damage or

deterioration due to floods, driving rain, and/or wind. The City reserves the right, to order that additional protection measures over and beyond those proposed by the Contractor, be taken to safeguard all components of the Project.

B. The mixing and placing of concrete or pavement courses, the laying of masonry, and installation of sewers and water mains and stormwater pipes shall be stopped during rainstorms, if ordered by the Engineer; and all freshly placed work shall be protected by canvas or other suitable covering in such manner as to prevent running water from coming in contact with it. Sufficient coverings shall be provided and kept ready at hand for this purpose. The limitations and requirements for mixing and placing concrete or laying of masonry, in cold weather shall be as described elsewhere in these Specifications.

1.17 WEATHER DAYS

A. A “Weather Day” is defined as a normal working day during which the Contractor was unable to perform critical path work for a continuous period of more than four (4) hours during that day.

B. The CONTRACTOR shall be required to submit a record of a Weather Day in accordance with the contract documents and within 48 hours of the occurrence of the event to the ENGINEER and the OWNER for review.

C. Weather Days must be reported in the Progress Schedule Update Narrative Report and substantiated with the amount of rainfall obtained from the nearest City identified rain gauge and a description of the activity that was interrupted.

1.18 HURRICANE PRECAUTIONS

A. During such periods of time as are designated by the United States Weather Bureau as being a hurricane watch or warning, the Contractor, at no cost to the City, shall take all precautions necessary to secure the Project site in response to all threatened storm events.

B. Compliance with any specific hurricane watch or warning precautions will not constitute additional work.

C. Suspension of the Work caused by an impending or actual storm event will entitle the Contractor to additional Contract Time equivalent to the time lost as a result of the threatened or actual storm event and shall not give rise to a claim for compensable delay.

1. In the event of a threatened storm that does not occur, the Contract Time will be equivalent to the time between United States Weather Bureau notice of a watch or warning and the lifting of same.

2. In the event of an actual storm event, the Contract Time will be equivalent to the time between United States Weather Bureau notice of a watch or warning and the time required to establish safe working conditions.

1.19 USE OF FACILITIES BEFORE COMPLETION

A. The City reserves the right to enter and use any portion of the constructed facilities before final completion of the whole work to be done under this Contract. However, only those

portions of the facilities which have been completed to the City's satisfaction may be placed into service. The City will issue only one Certificate of Substantial Completion to the Contractor covering the entire project regardless of when each portion of the facilities is placed into service.

B. It shall be the City's responsibility to prevent premature connections to or use of any portion of the installed facilities by private or public parties, persons or groups of persons, before the City issues his Certificate of Substantial Completion covering that portion of the work to be placed in service.

D. Consistent with the approved progress schedule, the Contractor shall cooperate with the City to accelerate completion of those facilities, or portions thereof, which have been designated for early use by the City.

1.20 UTILITY LOCATIONS

A. As far as possible, all existing utility lines in the project area have been shown on the plans. However, Fort Lauderdale does not guarantee that all lines are shown, or that said lines are in their true location. It shall be the Contractor’s responsibility to identify and locate all underground or overhead utility lines or equipment affected by the project. No additional payment will be made to the Contractor because of discrepancies in actual and plan location of utilities.

B. The Contractor shall notify each utility company involved at least thirty (30) days prior to the start of construction to arrange for positive underground location, relocation, or support of its utility where that utility may be in conflict with or endangered by the proposed construction. Relocation of water mains or other utilities for the convenience of the Contractor shall be paid for by the Contractor. All charges by utility companies for temporary support of its utilities shall be paid for by the Contractor. All cost of permanent utility relocations to avoid conflict shall be the responsibility of the Contractor and the utility company involved.

C. The Contractor shall schedule and coordinate the Work in such a manner that it is not delayed by the utility companies relocating or supporting their utilities. No compensation will be paid to the Contractor for any loss of time or delay.

D. All overhead, surface or underground structures and/or utilities encountered are to be carefully protected from damage or displacement. All damage to said structures and/or utilities is to be completely repaired within a reasonable time; needless delay will not be tolerated. The City reserves the right to remedy any damage by ordering outside parties to make repairs at the expense of the Contractor. All repairs made by the Contractor are to be made to the satisfaction of the utility owner and shall be inspected by a representative of the utility owner and the Engineer.

E. The Contractor should be aware of the Sunshine State One Call Center, which has a free locating service for contractors and excavators:

1. Within forty-eight hours before excavating, dial toll free 811, and a locator will be dispatched to the Work location. Contractor shall reasonably notify other utility companies not notified by Sunshine State One Call Center.

F. In the event that during the course of the Work Contractor encounters subsurface or

concealed conditions or unknown physical conditions of an unusual nature at the Project site which differ materially from those shown on the Contract Documents, which are not marked in the field by locating services or Utility Department, and which differ from those ordinarily encountered and generally recognized as inherent in Work of the character called for in the Contract Documents, Contractor, without disturbing the conditions and before performing any Work affected by such conditions, shall, within twenty-four (24) hours of their discovery, notify City and Engineer in writing of the existence of the aforesaid conditions. Engineer and City shall, within two (2) business days after receipt of Contractor's written notice, investigate the site conditions identified by Contractor. Should Engineer determine that the conditions of the Project site are not so materially different to justify a change in the terms of the Contract, Engineer shall so notify City and Contractor in writing, stating the reasons, and such determination shall be final and binding upon the parties hereto.

G. No request by Contractor for a change to the Contract Price or Time under this provision shall be allowed if the Contractor has not given written notice in strict accordance with these provisions, or if it is made after the date certified by the Engineer as the date of Substantial Completion.

1.21 ENVIRONMENTAL PROTECTION

A. The Contractor shall furnish all labor and equipment and perform all Work required for the prevention of environmental pollution during and as a result of the Work under this contract. The Contractor shall be responsible for preparing and complying with the requirements of the National Pollution Prevention Discharge Elimination System (NPDES) and Storm Water Pollution Prevention Plan (SWPPP), including preparation and submittal of the Notice of Intent (NOI) prior to start of construction. For the purpose of this contract, environmental pollution is defined as the presence of chemical, physical, or biological elements or agents which adversely affect human health or welfare; unfavorably alter ecological balances of importance to human life, affect other species of importance to man, or degrade the utility of the environment for aesthetic and recreational purposes. The control of environmental pollution requires consideration of air, water, land and involves noise, solid waste management and management of radiant energy and radioactive materials, as well as other pollutants.

B. The Contractor shall take all steps necessary to protect water quality in the connected waters around the project and shall utilize such additional measures as directed by the Engineer. Silt screens, hay bales, turbidity curtains, or other control measures adjacent to outfall construction shall not be removed until the turbidity of the affected waters is equal to or lower than the ambient turbidity of undisturbed segments of adjacent surface waters.

PART 2 – PRODUCTS

(NOT USED)

PART 3 – EXECUTION

(NOT USED)

- END OF SECTION -

SECTION 01025

MEASUREMENT AND PAYMENT

PART 1 - GENERAL

1.01 THE REQUIREMENT

A. Payment for various items of the Bid Schedule, as further specified herein, shall include all compensation to be received by the CONTRACTOR for furnishing all tools, equipment, supplies, and manufactured articles, and for all labor operations and incidentals appurtenant to the items of work being described, as necessary to complete the various items of the WORK all in accordance with requirements of the Contract Documents, including all appurtenances thereto, and including all costs of permits and cost of compliance with the regulations of public agencies having jurisdiction, including Safety and Health Requirements of the Occupational Safety and Health Administration of the U.S. Department of Labor (OSHA). No separate payment will be made for any item that is not specifically set forth in the Bid Schedule, and all costs therefore shall be included in the prices named in the Bid Schedule for the various appurtenance items of work.

B. The CONTRACTOR'S attention is called to the fact that the quotations for the various items of Work are intended to establish a total price for completing the Work in its entirety. Should the contractor feel that the cost for any item of Work has not been established by the Schedule of Prices Bid for this Section, it shall include the cost for that Work in some other applicable bid item, so that its proposal for the project does reflect its total price for completing the Work in its entirety.

1.02 SCHEDULE OF PRICES BID

A. Item 1 – All Work Associated with Mobilization and Demobilization (5.0%): The lump sum price for this item shall be full compensation for all mobilization and demobilization activities. This includes, but is not limited to, Performance and Payment Guarantee and insurance, scheduling, project coordination, Contractor staging area, Contractor and Engineer Field Offices, labor associated with permit acquisition, temporary facilities, audio-visual documentation of the existing conditions, distribution of flyers to affected residents and businesses, project signs, finish grading, site cleanup and site restoration, and all other activities necessary to prepare and complete the contract work. The payment for mobilization and demobilization shall not exceed 5% of the sum of Bid Item Nos. 1 through 7. Partial payments for mobilization and demobilization shall be made as follows:

Construction % Complete	Allowable % of Lump Sum for Mobilization/Demobilization
After NTP	2.5
10	22.5
25	50
50	75
100	100

B. Item 2 – All Work Associated with the As-Built/Record Drawings: The lump sum price for this bid item shall be full compensation for preparation and submittal of As-Built/Record Drawings, furnished in accordance with Contract Documents. For all improvements, the CONTRACTOR shall conform to the City of Fort Lauderdale standards and requirements. See Section 01320 for complete description.

C. Item 3 – All Work Associated with the Prevention, Control, & Abatement of Erosion and Water Pollution (2%): The lump sum price indicated for this bid item shall be full compensation for all labor, equipment, and material necessary for preparation, submittal, approval, and implementation of the NPDES Permit Application (Notice of Intent and Notice of Termination), reporting by a person holding a certification as an FDEP NPDES Construction Site Inspector, preparing a Stormwater Pollution Prevention Plan (SWPPP) and implementation of Best Management Practices (BMP) and environmental pollution protection throughout construction as outlined in the Contract Documents and required by the City. Payment for this item shall not exceed 2% of the of the sum of Bid Item Nos. 1 through 7 and will be made in equal monthly payments throughout the duration of active construction and will not be issued prior to Mobilization.

D. Item 4 – Outfall Pump Station: The lump sum price for this item shall be full compensation for all labor, equipment, and material for all work necessary and required for the construction of the Outfall Pump Station as required in the Contract Documents. This item includes, but is not limited to, all general, civil, mechanical, structural, architectural, electrical, instrumentation and control, ventilation and air conditioning, testing, startup services, and sitework required for a complete and operable system. Item No. 4 includes all work not defined in other Bid Items.

E. Item 5 – Inlet Pump Station: The lump sum price for this item shall be full compensation for all labor, equipment, and material for all work necessary and required for the construction of the Inlet Pump Station as required in the Contract Documents. This item includes, but is not limited to, all general, civil, mechanical, structural, electrical, instrumentation and control, testing, startup services, and sitework required for a complete and operable system.

F. Item 6 – Remove and Dispose of Existing Trees: The unit price for this bid item shall be full compensation per each for all labor, equipment, and materials to remove and dispose of existing Bald Cypress trees up to 28 inches in diameter. Removal and disposal of trees shall include procuring the services of a Licensed Certified Arborist, obtaining of appropriate tree removal permits and reports, spading of tree, root pruning, backfill and the removal and disposal of all vegetative matter associated with the removal as required by the Contract Documents or directed by the ENGINEER.

G. Item 7 – Remove and Relocate Existing Trees: The unit price for this bid item shall be full compensation per each for all labor, equipment, and materials to remove and relocate existing trees as shown on the Contract Documents. Removal and relocation of trees shall include procuring the services of a Licensed Certified Arborist, obtaining of appropriate tree removal permits, spading of tree, root pruning, replanting, maintenance, backfill and the removal and disposal of all vegetative matter associated with the removal or relocation of trees as required by the Contract Documents or directed by the ENGINEER.

1.03 NONPAYMENT FOR REJECTED OR UNUSED PRODUCTS

A. Payment will not be made for following:

1. Loading, hauling, and disposing of rejected material.

2. Quantities of material wasted or disposed of in manner not called for under Contract Documents.

3. Rejected loads of material, including material rejected after it has been placed by reason of failure of Contractor to conform to provisions of Contract Documents.

4. Material not unloaded from transporting vehicle.

5. Defective Work not accepted by City.

6. Material remaining on hand after completion of Work.

1.04 PARTIAL PAYMENT FOR STORED MATERIALS AND EQUIPMENT

A. Partial Payment: Payment for stored materials and equipment shall only be made with submittal of "paid" receipts. No partial payments will be made for materials and equipment delivered or stored unless Shop Drawings or preliminary operation and maintenance manuals are acceptable to Engineer.

B. Final Payment: Will be made only for products incorporated in Work; remaining products, for which partial payments have been made, shall revert to Contractor unless otherwise agreed, and partial payments made for those items will be deducted from final payment.

1.05 ALLOWANCES

A. The allowances shall be used only at the discretion of and as ordered by the City.

B. Any portion of these allowances that remain after all authorized payments have been made will be withheld from contract payments and will remain with the City.

C. Allowance Accounts

1. Florida Power and Light (FP&L) Allowance: The allowance account for this item shall be full compensation for all fees associated with obtaining electrical power from FP&L. Payment will be based on the actual fee paid directly to the agency, documented by paid receipts and specifically excluding any labor, markups, overhead and profit, administration, or other costs involved in payment of the fees. This allowance account shall also include additional work required by the Contractor for accommodating FP&L service requirements not shown on the Contract Documents. All work authorized for payment shall be authorized in writing by the City. Amount to be paid shall be negotiated or agreed to by both parties. Any portion of this fund remaining after all authorized payments have been made will be withheld from contract payment and will remain with the City of Fort Lauderdale.

2. Permits, License and Fees Allowance: The allowance account for this item shall be full compensation for all permits, licenses, and fees required of the Contractor from the various agencies having jurisdiction over the construction of the project. The allowance shown is an estimate of the fees required. Payment will be based on the actual permit, license or fee paid directly to the agency, documented by paid receipts and specifically excluding any labor, markups, overhead and profit, administration, or other costs involved in obtaining the permits, licenses or fees. Fees specifically excluded from this allowance include, but are not limited to, re-inspection fees and expired permit fees. This item includes payment for all tree removal permits, tree relocation permits, and payments into the City Tree Canopy Fund required by the Contract Documents. Any portion of this fund remaining after all authorized payments have been made will be withheld from contract payment and will remain with the City of Fort Lauderdale.

3. Undefined Conditions Allowance: The allowance account for this item shall include work associated with undefined conditions or conflicts developing from undefined conditions including, but not limited to, removal, relocation and replacement of utilities in conflict with proposed work during construction. All work authorized for payment shall be authorized in writing by the City. Amount to be paid per undefined conditions or conflicts shall be negotiated or agreed to by both parties. Any portion of this fund remaining after all authorized payments have been made will be withheld from contract payment and will remain with the City of Fort Lauderdale.

4. Testing Fees Allowance: The allowance account for this item shall be full compensation for payment of testing requested by the City or Engineer. The allowance shown is an estimate of the fees required. Payment will be based on the actual fees paid directly to the testing laboratory, documented by paid receipts and specifically excluding any labor, markups, overhead and profit, administration, or other costs involved in paying fees. The cost of any required test or laboratory analysis with the Contractor fails shall be paid for by the Contractor. Any portion of this fund remaining after all authorized payments have been made will be withheld from contract payment and will remain with the City of Fort Lauderdale.

5. Bypass Pumps Allowance: The allowance account for this item shall be full compensation for installation, operation, maintenance, and removal of bypass pumps at the Outfall Pump Station and/or the Inlet Station during construction. This item will be used at the discretion of the City. Payment will be based on the actual costs paid directly to the equipment rental company with a 10% markup for Contractor overhead and profit. Any other costs associated with this item shall be negotiated or agreed to by both parties. Any portion of this fund remaining after all authorized payments have been made will be withheld from contract payment and will remain with the City of Fort Lauderdale.

PART 2 -- PRODUCTS

(NOT USED)

PART 3 -- EXECUTION

(NOT USED)

- END OF SECTION -

SECTION 01070

ABBREVIATIONS

PART 1 – GENERAL

1.1 THE REQUIREMENT

A. Wherever in these specifications references are made to the standards, specifications, or other published data of the various national, regional, or local organizations, such organizations may be referred to by their acronym or abbreviation only. As a guide to the user of these specifications, the following acronyms or abbreviations which may appear in these specifications shall have the meanings indicated herein.

1.2 ABBREVIATIONS AND ACRONYMS

AAMA	Architectural Aluminum Manufacturer's Association
AASHTO	American Association of the State Highway and Transportation Officials
ACI	American Concrete Institute
ACOE	Army Corps of Engineers
ACPA	American Concrete Pipe Association
AFBMA	Anti-Friction Bearing Manufacturer's Association, Inc.
AGMA	American Gear Manufacturer's Association
AHGDA	American Hot Dip Galvanizers Association
AI	The Asphalt Institute
AIA	American Institute of Architects
AISC	American Institute of Steel Construction
AISI	American Iron and Steel Institute
AITC	American Institute of Timber Construction
AMCA	Air Moving and Conditioning Association
ANSI	American National Standards Institute, Inc.
APA	American Plywood Association
API	American Petroleum Institute
APHA	American Public Health Association
APWA	American Public Works Association

ASA	Acoustical Society of America
ASAE	American Society of Agriculture Engineers
ASCE	American Society of Civil Engineers
ASHRAE	American Society of Heating, Refrigerating, and Air-Conditioning Engineers
ASLE	American Society of Lubricating Engineers
ASME	American Society of Mechanical Engineers
ASMM	Architectural Sheet Metal Manual
ASSE	American Society of Sanitary Engineers
ASTM	American Society for Testing and Materials
AWPA	American Wood Preservers Association
AWPI	American Wood Preservers Institute
AWS	American Welding Society
AWWA	American Water Works Association
BCEPGMD	Broward County Environmental Protection and Growth Management Department
BCHD	Broward County Health Department
BHMA	Builders Hardware Manufacturer's Association
CMA	Concrete Masonry Association
CRSI	Concrete Reinforcing Steel Institute
DIPRA	Ductile Iron Pipe Research Association
EIA	Electronic Industries Association
EPA	Environmental Protection Agency
ETL	Electrical Test Laboratories
FBC	Florida Building Code
FDEP	Florida Department of Environmental Protection
FDOT	Florida Department of Transportation
FS	Federal Specifications

IEEE	Institute of Electrical and Electronics Engineers
IES	Illuminating Engineering Society
IPCEA	Insulated Power Cable Engineers Association
ISA	Instrument Systems and Automation
ISO	International Organization for Standardization
MBMA	Metal Building Manufacturers Association
MMA	Monorail Manufacturers Association
MTI	Marine Testing Institute
NAAM	National Association of Architectural Metal Manufacturers
NACE	National Association of Corrosion Engineers
NBS	National Bureau of Standards
NEC	National Electrical Code
NEMA	National Electrical Manufacturer's Association
NFPA	National Fire Protection Association
NIOSH	National Institute of Occupational Safety and Health
NIST	National Institute of Standards and Testing
NRCA	National Roofing Contractors Association
NSF	National Science Foundation
OSHA	Occupational Safety and Health Administration
PCA	Portland Cement Association
SMACCNA	Sheet Metal and Air Conditioning Contractors National Association
SSPC	Society for Protective Coatings
SSPWC	Standard Specifications for Public Works Construction
SFWMD	South Florida Water Management District
UL	Underwriters Laboratories, Inc.

PART 2 – PRODUCTS

(NOT USED)

PART 3 – EXECUTION

(NOT USED)

- END OF SECTION -

SECTION 01090

REFERENCE STANDARDS

PART 1 – GENERAL

1.01 THE REQUIREMENT

A. Titles of Sections and Paragraphs: Captions accompanying specification sections and paragraphs are for convenience of reference only, and do not form a part of the Specifications.

B. Applicable Publications: Whenever in these Specifications references are made to published specifications, codes, standards, or other requirements, it shall be understood that wherever no date is specified, only the latest specifications, standards, or requirements of the respective issuing agencies which have been published as of the date of the opening of bids, shall apply; except to the extent that said standards or requirements may be in conflict with applicable laws, ordinances, or governing codes. No requirements set forth herein or shown on the Drawings shall be waived because of any provision of, or omission from, said standards or requirements.

C. Specialists, Assignments: In certain instances, Specification text requires (or implies) that specific work is to be assigned to specialists or expert entities, who must be engaged for the performance of that work. Such assignments shall be recognized as special requirements over which the Contractor has no choice or option. These requirements shall not be interpreted so as to conflict with the enforcement of building codes and similar regulations governing the Work; also they are not intended to interfere with local union jurisdiction settlements and similar conventions. Such assignments are intended to establish which party or entity involved in a specific unit of work is recognized as "expert" for the indicated construction processes or operations. Nevertheless, the final responsibility for fulfillment of the entire set of contract requirements remains with the Contractor.

1.02 REFERENCE SPECIFICATIONS, CODES, AND STANDARDS

A. Without limiting the generality of other requirements of the specifications, all work specified herein shall conform to or exceed the requirements of all applicable codes.

B. References herein to "Building Code" shall mean the Florida Building Code (FBC) Broward Edition. The latest edition of the code as approved and used by the local agency as of the date of the opening of bids, as adopted by the agency having jurisdiction, shall apply to the Work herein, including all addenda, modifications, amendments, or other lawful changes thereto.

C. In case of conflict between codes, reference standards, Drawings and the other Contract Documents, the most stringent requirements shall govern. All conflicts shall be brought to the attention of the Engineer for clarification and directions prior to ordering or providing any materials or labor. The Contractor shall follow the most stringent requirements.

D. Applicable Standard Specifications: The Contractor shall construct the Work specified herein in accordance with the requirements of the Contract Documents and the referenced portions of those referenced codes, standards, and Specifications listed herein.

E. References herein to "OSHA Regulations for Construction" shall mean Title 29, Part 1926, Construction Safety and Health Regulations, Code of Federal Regulations (OSHA), including all changes and amendments thereto.

F. References herein to "OSHA Standards" shall mean Title 29, Part 1910, Occupational Safety and Health Standards, Code of Federal Regulations (OSHA), including all changes and amendments thereto.

PART 2 – PRODUCTS

(NOT USED)

PART 3 – EXECUTION

(NOT USED)

- END OF SECTION -

SECTION 01200

PROJECT MEETINGS

PART 1 – GENERAL

1.01 PRECONSTRUCTION CONFERENCE

A. A preconstruction conference will be held after award of contract and prior to the Notice to Proceed. The Engineer shall prepare and distribute the meeting agenda and shall preside at the meeting. The Engineer shall record and distribute minutes of the proceedings and decisions.

B. A separate preconstruction meeting may be required on site with the Department of Parks and Recreation – City of Fort Lauderdale.

C. The Contractor shall provide a Project Superintendent and a dedicated Project Manager specific to this project as a supervisor to oversee proper performance of the Work. The Project Manager shall attend all meetings and have the authority to make decisions on behalf of the General Contractor. The Project Manager shall be responsible for all coordination, document handling, submittal review and processing, quality control, and project scheduling. The Project Manager, once approved by the City and the Engineer, shall not be replaced without prior consent by the City and Engineer.

   1. The Project Manager and Project Superintendent shall be direct employees of the Prime Contractor.

   2. The Project Manager and Project Superintendent shall fluently speak, read and write in English.

D. Attendance:

   1. City

   2. Engineer

   3. Program Manager

   4. Contractor’s Project Manager

   5. Contractor’s Project Superintendent

   6. Major Subcontractors

E. Minimum Agenda:

   1. Tentative construction and submittal schedules

   2. Critical work sequencing

   3. Designation of responsible personnel

4. Processing of Field Decisions and Change Orders
5. Adequacy of distribution of Contract Documents
6. Submittal of Shop Drawings and samples
7. Procedures for maintaining record documents
8. Use of site and City's requirements
9. Major equipment deliveries and priorities
10. Safety and first aid procedures
11. Security procedures
12. Housekeeping procedures
13. Processing of Partial Payment Requests
14. General regard for community relations

1.02 PRELIMINARY CPM SCHEDULE REVIEW MEETING

A. The Contractor shall participate in a Preliminary CPM Schedule Review Meeting in accordance with the requirements of Section 01300.

1.03 PROGRESS MEETINGS

A. Progress meetings will be held bi-weekly at the Field Office during the performance of the work of this Contract. Additional meetings may be called as progress of work dictates. Day and time of progress meetings will be scheduled at the Preconstruction Meeting.

B. Engineer will prepare and distribute agenda, preside at meetings and record minutes of proceedings and decisions. Engineer will distribute copies of minutes to participants.

C. Attendance:

1. City
2. Engineer
3. Program Manager
4. Contractor’s Project Manager
5. Contractor’s Project Superintendent
6. Subcontractors, as pertinent to the agenda

D. Minimum Agenda:

1. Review and approve minutes of previous meetings.

2. Review progress of Work since last meeting.
3. Review proposed 30-60 day construction schedule.
4. Note and identify problems which impede planned progress.
5. Develop corrective measures and procedures to regain planned schedule.
6. Revise construction schedule as indicated and plan progress during next work period.
7. Maintaining of quality and work standards.
8. Complete other current business.
9. Schedule next progress meeting.

1.04 NIEGHBORHOOD ASSOCIATION MEETINGS

A. The Contractor shall attend meetings with the local Neighborhood Associations and other stakeholders as requested by the City. Contractor shall be prepared to provide information on construction schedule, scope of work, impacts to local residents, and other coordination items. Meetings shall be held quarterly throughout the duration of construction.

1.05 PRE-CONCRETE CONFERENCE

A. A pre-concrete conference shall be held on site prior to the start of the concrete construction schedule. The pre-concrete conference shall be in accordance with the requirements of Section 03300 of the Contract Documents.

1.06 OTHER MEETINGS

A. The Contractor shall attend and participate in other meetings as required during execution of the Work. These meetings may include, but are not limited to, the following:

1. Meetings requested by regulatory agencies having jurisdiction over the project
2. Meetings with utility entities for coordination purposes throughout the construction period
3. Meetings with other stakeholders including City officials, residents, and businesses
4. Coordination meetings with other Contractors conducting work at the site

PART 2 – PRODUCTS

(NOT USED)

PART 3 – EXECUTION

(NOT USED)

- END OF SECTION -

SECTION 01300

SUBMITTALS

PART 1 – GENERAL

1.01 THE REQUIREMENT

A. This section specifies the means of all submittals. All submittals, whether their final destination is to the City, Engineer, or other representatives of the City, shall be directed through the Engineer. A general summary of the types of submittals and the number of copies required is as follows:

Copies to Engineer	Type of Submittal
E	Progress Schedule
E	Construction Schedule
E	Schedule of Payment Items
4 + E	Progress Payment Applications
3 + E	Shop Drawings
2 + E	Warranties
E	Audio Visual Preconstruction Record
E	Project Photographs
2 + E	Certificates of Compliance
2*	Product Samples
3 + E	Operation and Maintenance Manual
3 + E	Record Drawings
E	As Built GIS Database
2 + E	Elevation Certificates for New Buildings – Certified by Surveyor

E = Electronic submittal in pdf format.
** Unless otherwise required in the specific Section where requested.*

B. All submittals shall also be submitted to Engineer electronically.

1.02 SUBMITTAL PROCEDURES

A. The Contractor shall transmit each submittal with a form acceptable to the Engineer, clearly identifying the project Contractor, the enclosed material and other pertinent information specified in other parts of this section. Identify variations from Contract Documents and

Product or system limitations which may be detrimental to successful performance of the completed Work.

B. Revise and resubmit submittals as required, identify all changes made since previous submittals. Resubmittals shall be noted as such.

C. Distribute copies of reviewed submittals to concerned parties. Instruct parties to promptly report any inability to comply with provisions.

D. All electronic submittals shall be digitally submitted to the Engineer through the construction project management system Procore (www.procore.com). All submittals shall be numbered, labeled and dated. See the attached Procore Guidelines at the end of this specification section for additional information.

1.03 CONSTRUCTION PROGRESS SCHEDULE

A. The Contractor shall have the capability of preparing and utilizing the specified construction progress scheduling techniques. A statement of capability shall be submitted in writing to the Engineer with the issuance of the Notice-to-Proceed by the City and will verify that either the Contractor's organization has in-house capability qualified to use the technique or that the Contractor employs a consultant who is so qualified. Capability shall be verified by description of the construction projects to which the Contractor or its consultant has successfully applied the scheduling technique and which were controlled throughout the duration of the project by means of systematic use and updating of the construction progress schedule, the network analysis and associated reports. The submittal shall include the name of the individual on the Contractor's staff who will be responsible for the construction progress schedule, and associated reports and for providing the required updating information of same. The Contractor shall submit its proposed progress (baseline) schedule to the Engineer for review and comment in accordance with the Contract Documents. The Engineer shall have the authority to determine acceptability/correctness of the schedule logic and activity interrelationships. The use of extraneous, nonworking activities and activities which add restraints to the construction schedule shall not be accepted. Baseline schedules that do not meet their contract completion dates shall not be accepted.

B. The Contractor’s progress schedule (baseline and monthly updates) shall be computer generated and resource loaded. Each computer-generated construction progress schedule and associated report shall include the following tabulations: a list of activities in numerical order, a list of activity precedence, schedules sequenced by Early Start Date, Total Float, and Late Start Date. Each schedule, and report shall include the following minimum items:

1. Activity Numbers

2. Estimated Duration

3. Activity Description

4. Early Start Date (Calendar Dated)

5. Early Finish Date (Calendar Dated)

6. Latest Allowable Start Date (Calendar Dated)

7. Latest Allowable Finish Date (Calendar Dated)

8. Status (whether critical)

9. Total Float and Free Float

10. Resource Plots

C. In addition, each construction progress schedule, network analysis and report shall be prefaced with the following summary data:

1. Contract Name and Number

2. Contractor's Name

3. Contract Duration and Float

4. Contract Schedule with critical path.

5. The Effective or Starting Date of The Schedule (the date indicated in the Notice-to-Proceed)

D. The workday to calendar date correlation shall be based on an 8-hour day and 40-hour week with adequate allowance for holidays, adverse weather and all other special requirements of the Work. Normal work hours are Monday through Friday, 7:30 am to 4:30 pm.

E. If the Contractor desires to make changes in its method of operating which affect the construction progress schedule and related items, the Contractor shall notify the Engineer in writing stating what changes are proposed and the reason for the change. If the Engineer accepts these changes, in writing, the Contractor shall revise and submit, without additional cost to the City, all of the affected portions of the construction progress schedule, and associated reports. The construction progress schedule and related items shall be adjusted by the Contractor only after prior acceptance, in writing by the Engineer. Adjustments may consist of changing portions of the activity sequence, activity durations, division of activities, or other adjustments as may be required. The addition of extraneous, nonworking activities and activities which add restraints to the construction progress schedule shall not be accepted.

F. Except where earlier completions are specified, schedule dates which show completion of all Work prior to the contract completion date shall, in no event, be the basis for claim for delay against the City by the Contractor.

G. Construction progress schedules and related items which contain activities showing negative float or which extend beyond the contract completion date will be accepted only

upon the condition that the Contractor will comply with recovery schedule requirements as specified in paragraph H. below.

H. Whenever it becomes apparent from the current construction progress schedule and associated reports that delays to the critical path have resulted and the contract completion date will not be met, or when so directed by the Engineer, the Contractor shall take some or all of the following actions at no additional cost to the City. They shall submit to the Engineer for approval, a written statement of the steps they intend to take to remove or arrest the delay to the critical path in the current construction progress schedule, including a computer generated schedule revision to reflect proposed actions

1. Increase construction personnel in such quantities and crafts as will substantially eliminate the backlog of work.

2. Increase the number of working hours per shift, shifts per day, working days per week, the amount of construction equipment, or any combination of the foregoing, sufficiently to substantially eliminate the backlog of work.

3. Reschedule activities to achieve maximum practical concurrence of accomplishment of activities, and comply with the revised schedule.

I. When so requested by the Engineer, should the Contractor fail to submit a written statement of the steps they intend to take or should fail to take such steps as reviewed and accepted in writing by the Engineer, the Engineer may direct the Contractor to increase the level of effort in personnel (trades), equipment and work schedule (overtime, weekend and holiday work, etc.) to be employed by the Contractor in order to remove or arrest the delay to the critical path in the current construction progress schedule, and the Contractor shall promptly provide such level of effort at no additional cost to the City.

J. If the completion of any activity, whether or not critical, falls more than 100 percent behind its previously scheduled and accepted duration, the Contractor shall submit to the Engineer for approval a schedule adjustment showing each such activity divided into two activities reflecting completed versus uncompleted work.

K. Shop drawings which are not approved on the first submittal or within the time scheduled, and equipment which does not pass the specified tests and certifications shall be immediately rescheduled.

L. The contract time will be adjusted only in accordance with the General Requirements and other portions of the Contract Documents as may be applicable. If the Engineer finds that the Contractor is entitled to any extension of the contract completion date, the Engineer's determination as to the total number of days extension shall be based upon the current construction progress schedule and on all data relevant to the extension. Such data shall be included in the next updating of the schedule and related items. Actual delays in activities which, according to the construction progress schedule, do not affect any contract completion date will not be the basis for a change therein.

M. From time to time it may be necessary for the contract schedule of completion time to be adjusted by the City in accordance with the General Requirements and other portions of the Contract Documents as may be applicable. Under such conditions, the Engineer will direct the Contractor to reschedule the Work or contract completion time to reflect the changed conditions, and the Contractor shall revise the construction progress schedule and related items accordingly, at no additional cost to the City.

N. Available float time may be used by the City through the City's Engineer.

O. The City controls the float time and, therefore, without obligation to extend either the overall completion date or any intermediate completion dates, the City may initiate changes that absorb float time only. City initiated changes that affect the critical path on the network diagram shall be the sole grounds for extending the completion dates. Contractor initiated changes that encroach on the float time may be accomplished only with the City's concurrence. Such changes, however, shall give way to City initiated changes competing for the same float time.

P. To the extent that the construction project schedule, or associated report or any revision thereof shows anything not jointly agreed upon or fails to show anything jointly agreed upon, it shall not be deemed to have been accepted by the Engineer. Failure to include on a schedule any element of Work required for the performance of this Contract shall not excuse the Contractor from completing all Work required within any applicable completion date, notwithstanding the review of the schedule by the Engineer.

Q. Review and acceptance of the construction progress schedule, and related reports, by the Engineer is advisory only and shall not relieve the Contractor of the responsibility for accomplishing the Work within the contract completion date. Omissions and errors in the construction progress schedule, and related reports shall not excuse performance less than that required by the Contract and in no way make the Engineer an insurer of the Contractor's success or liable for time or cost overruns flowing from any shortcomings in the construction progress schedule, and related reports.

R. The Contractor shall present and discuss the proposed schedule at the preconstruction conference.

S. The construction progress schedule shall be based upon the precedence diagramming method of scheduling and shall be prepared in the form of a horizontal bar chart showing in detail the proposed sequence of the Work and identifying all construction activities included but not limited to yard piping, all structures and treatment units and all related Work specified herein to be performed under the Contract. The schedule shall be time scaled, identifying the first day of each week, with the estimated date of starting and completion of each stage of the Work in order to complete the project within the contract time. The project critical path shall be clearly identified in color or by other means acceptable to the Engineer.

T. The progress schedule shall be plotted on 22 inch by 34 inch and 11 inch by 17 inch paper and shall be revised and updated monthly, depicting progress through the last day of the

current month and scheduled progress through completion. Up to date hard copies of the schedule shall be submitted along with the application for monthly progress payments for the same period.

U. The construction progress schedule shall be developed and maintained using Primavera and Primavision software as manufactured by Primavera Systems, Inc., or equal.

V. The Contractor shall produce a 3-week Look Ahead Schedule for construction meetings on a bi-weekly basis or as determined by City.

1.04 SCHEDULE OF PAYMENT ITEMS

A. The Contractor shall submit a Schedule of Payment Items for review in accordance with the Contract Documents. The schedule shall contain the installed value of the component parts of Work for the purpose of making progress payments during the construction period and shall directly correlate on an item by item basis (unless otherwise accepted by the Engineer) to each individual activity detailed in the construction progress schedule. The sum of all scheduled items shall equal the total value of the Contract. Reference section entitled “Measurement and Payment” for further details.

B. The Contractor shall expand or modify the above schedule and materials listing as required by the Engineer's initial or subsequent reviews.

1.05 PROGRESS PAYMENT APPLICATIONS

A. Applications for payments shall be made to the Engineer for review in accordance with Article 7 of the Construction Agreement.

1.06 SHOP DRAWINGS

A. The Contractor shall submit electronic copies of shop drawings in Adobe Portable Document Format (PDF) format for review by all general, civil, mechanical, structural, architectural, electrical and instrumentation related improvements, including details, piping layout and appurtenances, wiring, color selection charts, materials and equipment fabricated especially for this Contract, and materials and equipment for which such Drawings are specified or specifically requested by the Engineer.

B. Within one week of shop drawing approval (Furnish as Submitted or Furnish as Corrected), Contractor shall provide three (3) color hard copies of each shop drawing. Contractor may be required to submit certain sheets in large format to ensure all portions of shop drawing are legible. Engineer shall distribute electronic and hard copies to the City.

C. Shop drawings shall show the principal dimensions, weight, structural and operating features, space required, clearances, type and/or brand of finish or shop coat, grease fittings, etc., depending on the subject of the Drawings.

D. When so specified, or if considered by the Engineer to be acceptable, the manufacturer's specifications, catalog data, descriptive matter, illustrations, etc. may be submitted for review in place of shop drawings. In such case, the requirements shall be as specified for shop drawings, insofar as applicable.

E. Time delays caused by rejection of submittals are not cause for extra charges to the City or time extensions.

F. Requirements: The Contractor shall be responsible for the prompt submittal of all shop drawings so that there shall be no delay to the Work due to the absence of such drawings. Electronic copies of all shop drawings shall be submitted as directed by the Engineer during the preconstruction meeting. Shop drawings shall be submitted as a single, complete, and searchable image format document in PDF format with bookmarks for shop drawings consisting of multiple sections and/or more than 20 pages total.

G. All shop drawings shall be submitted to the Engineer through the Contractor. Each shop drawing shall be individually submitted. The Contractor is responsible for obtaining shop drawings from subcontractors and returning reviewed shop drawings to them. All Drawings shall be clearly marked with the name of the project, City, Contractor, specification section number and building, equipment, or structure to which the drawing applies. Drawings shall be suitably numbered stamped and signed by the Contractor. Each shop drawing shall be accompanied by a transmittal form listing the information identified above.

H. All submissions shall be dated and properly referenced to the specifications section and Contract Drawing number. The submittal number shall match the following submittal numbering system (or an equivalent system as approved by the Engineer):

Submittal Numbering System

1. Package ID: The package number will reflect the CSI (specification) section number as it appears in the specifications.

2. Subgroup ID: The submittal number will include the CSI number followed by the submittal number and a sequential letter indicating resubmittal number.

Example:

Package	Submittal	Description
03300	03300-001	Concrete Admixture A, First Submittal
	03300-001A	Concrete Admixture A, Second Submittal
	03300-001B	Concrete Admixture A, Third Submittal
	03300-002	Concrete Admixture B, First Submittal

I. Product Data: Where manufacturer's publications in the form of catalogs, brochures, illustrations, or other data sheets are submitted in lieu of prepared shop drawings, such submission shall specifically indicate the particular item offered. Identification of such items and relative pertinent information shall be made with indelible ink. Submissions showing only general information will not be accepted.

J. Product data shall include materials of construction, dimensions, performance characteristics, capacities, wiring diagrams, piping and controls, etc.

K. Warranties: When warranties are called for, a sample of the warranty shall be submitted with the shop drawings. The sample warranty shall be the same form that will be used for the actual warranty. Actual warranties shall be originals and notarized.

L. CONTRACTOR's Review: Only submittals which have been checked and corrected should be submitted to the Contractor by its subcontractors and vendors. Prior to submitting shop drawings to the Engineer, the Contractor shall check thoroughly all such shop drawings to satisfy itself that the subject matter thereof conforms to the Drawings and Specifications in all respects. Shop drawings which are correct shall be marked with the date, checker's name and indications of the Contractor's approval, and then shall be submitted to the Engineer. Other shop drawings submitted to the Engineer will be returned to the Contractor unreviewed.

M. CONTRACTOR's Responsibility: The Engineer’s review of shop drawings will be general and shall not relieve the Contractor of the responsibility for details of design, dimensions, etc., necessary for proper fitting and construction of the Work required by the Contract and for achieving the specified performance.

N. CONTRACTOR's Modifications: For submissions containing departures from the Contract Documents, the Contractor shall include proper explanation in their letter of transmittal. Should the Contractor submit for review equipment that requires modifications to the structures, piping, layout, etc. detailed on the Drawings, or specified, Contractor shall also submit for review details of the proposed modifications. If such equipment and modifications are accepted, the Contractor, at no additional cost to the City, shall do all Work necessary to make such modifications.

O. Substitutions: Whenever a particular brand or make of material, equipment, or other item is specified, or is indicated on the Drawings, it is for the purpose of establishing a standard of quality, design, and type desired and to supplement the detailed specifications. Any other brand or make which is equivalent to that specified or indicated may be offered as a substitute subject to the following provisions:

1. The Contractor shall submit for each proposed substitution sufficient details, complete descriptive literature, and performance data together with samples of the materials, where feasible, to enable the Engineer to determine if the proposed substitution is equal, in all respects including, but not limited to, quality, performance, ease of maintenance, availability of spare parts, and experience record.

2. The Contractor shall submit certified tests, where applicable, by an independent laboratory attesting that the proposed substitution is equal.

3. A list of installations where the proposed substitution is equal. Such listing shall cover a minimum of the previous three years and will furnish project names and contact phone numbers.

4. Where the acceptance of a substitution requires excessive review by the Engineer, revision or redesign of any part of the Work, all such additional review costs, revisions and redesign, and all new drawings and details required therefore, shall be at the Contractor's expense.

5. In all cases the Engineer shall be the sole judge as to whether a proposed substitution is to be accepted. The Contractor shall abide by the Engineer's decision when proposed substitute items are judged to be unacceptable and shall in such instances furnish the item as specified. No substitute items shall be used in the Work without written acceptance of the Engineer.

6. Acceptance of any proposed substitution shall in no way release the Contractor from any of the provisions of the Contract Documents.

7. The City may require, at Contractor's expense, a special performance guarantee or other surety with respect to any substitute.

P. Complete Submittals: Each submittal shall be complete in all aspects incorporating all information and data required to evaluate the products' compliance with the Contract Documents. Partial or incomplete submissions shall be returned to the Contractor without review.

Q. Engineer’s Review: The Engineer will review and return by email the reviewed shop drawings within 15 calendar days of receipt of such shop drawings. Reviewed shop drawings will be returned to the Contractor by email and marked with the appropriate box checked either "FURNISH AS SUBMITTED", "FURNISH AS CORRECTED" or “REVISE AND RESUBMIT".

R. Work Prior to Review: No material or equipment shall be purchased, fabricated especially for this Contract, or delivered to the project site until the required shop drawings have been submitted, processed, reviewed by the Engineer and marked either "FURNISH AS SUBMITTED" or "FURNISH AS CORRECTED". All materials and Work involved in the construction shall be as represented by said shop drawings.

S. The Contractor shall not proceed with any portion of the Work (such as the construction of foundations) for which the design and details are dependent upon the design and details of equipment for which submittal review has not been completed.

1.07 WARRANTIES

A. Warranties called for in the Contract Documents shall be originals and submitted to the City through the Engineer. When warranties are required, they shall be submitted prior to request for payment.

B. When advance copies of warranties are requested, they shall be submitted with, and considered as shop drawings.

1.08 CERTIFICATES

A. Four copies of certificates of compliance and test reports shall be submitted for requested items to the Engineer prior to request for payment.

1.09 PRODUCT SAMPLES

A. Contractor shall furnish for review all product samples as required by the Contract Documents or requested by the Engineer to determine compliance with the specifications.

B. Samples shall be of sufficient size or quantity to clearly illustrate the quality, type, range of color, finish or texture and shall be properly labeled to show complete project identification, the nature of the material, trade name of manufacturer and location of the Work where the material represented by the sample will be used.

C. Samples shall be checked by the Contractor for conformance to the Contract Documents before being submitted to the Engineer and shall bear the Contractor's stamp certifying that they have been so checked. Transportation charges on samples submitted to the Engineer shall be prepaid by the Contractor.

D. The Engineer's review will be for compliance with the Contract Documents, and its comments will be transmitted to the Contractor with reasonable promptness.

E. Acceptable samples will establish the standards by which the completed Work will be judged.

1.10 OPERATION AND MAINTENANCE MANUALS

A. General: The Contractor shall furnish and deliver to the Engineer three (3) complete

Operation and Maintenance (O&M) Manuals for the substantial, complete systems including instructions, technical bulletins, and any other printed matter such as diagrams, prints or drawings, containing full information required for the proper operations, maintenance, and repair of all Contractor furnished equipment. Also included shall be a spare parts diagram and complete spare parts list. These requirements are a prerequisite to the operation and acceptance of equipment. Each O&M Manual shall be bound together in appropriate three-ring hard cover binders. A detailed table of contents shall be provided for each Manual. Provide an appropriate label on the binder edge. Provide tabs and separate sections for operation, maintenance, spare parts, etc.

B. Written operations and maintenance instructions are required for all equipment items supplied for this project. The amount of detail shall be commensurate with the complexity of the equipment item. Extensive pictorial cuts of equipment are required for operator reference in servicing.

C. Information not applicable to the specific piece of equipment installed on this project shall be struck from the Manual by the Contractor. Information provided shall include a source of replacement parts and names of service representatives, including addresses and telephone numbers.

D. When written instructions include shop drawings and other information previously reviewed by the Engineer, only those editions which were accepted by the Engineer, and which accurately depict the equipment installed, shall be incorporated in the O&M Manual.

E. Maintenance and Lubrication Schedules: The Contractor shall include in the O&M Manual, for all Contractor furnished mechanical and electrical equipment including switchgear and motor control centers, instrumentation, valves, gates, etc., complete maintenance and lubrication schedules. Separate forms shall be submitted for each piece of equipment. Sample forms are included at the end of this section. As an alternate to the forms, the Contractor may submit an electronic copy of the manufacturer's recommended preventive maintenance requirements.

F. The Contractor shall include in the O&M Manual, for all Contractor furnished pumps and motors, complete data sheets. Separate forms shall be submitted for each different type and size of pump and motor. Sample forms are included at the end of this section.

G. The Contractor shall also furnish and deliver to the Engineer three (3) USB drives with all O&M manuals in an electronic format suitable for downloading into the City O&M database system. All manuals and drawings for the vendor provided equipment, sub-system or system shall be in Adobe Portable Document Format (PDF) format. They shall be PDF Formatted Text and Graphics (formerly Normal) or PDF Searchable Image (formerly Image+Text). If submitted in Searchable Image format, they shall be Optical Character Recognized (OCR'ed) at a 95 percent confidence level, using Adobe Acrobat Capture 3.x or an equivalent product. There shall be links from all Table of Contents entries to the actual occurrence in the body of the manual. Bookmarks shall be created for all linked Table of Contents entries. This requirement applies to all equipment to be furnished on this project.

1.11 RECORD DRAWINGS

A. Requirements for record drawings shall be in accordance with Section 01320.

1.12 AS BUILT GIS DATABASE

A. Requirements for the As-Guild GIS Database updates shall be in accordance with Section 01320.

1.13 ELEVATION CERTIFICATES (FOR NEW BUILDINGS)

A. Two copies of Elevation Certificates for each new building, certified by a registered surveyor, shall be submitted to the Engineer prior to the request for certificate of completion / certificate of occupancy from the City of Fort Lauderdale Building Department.

1.14 AUDIO-VISUAL PRECONSTRUCTION RECORD

A. General: Prior to commencing work, the Contractor shall have a continuous color audio-video recording taken of the entire Project, including adjacent work areas, plant site and all other areas that will be disturbed by the Contractor's operations, to serve as a record of preconstruction conditions. No construction shall begin prior to review and acceptance of the recordings covering the respective, affected construction area by the Engineer. The Engineer shall have the authority to reject all or any portion of the recording not conforming to the specifications and order that it be redone at no additional charge. The Contractor shall reschedule unacceptable coverage within five days after being notified. The Engineer shall designate those areas, if any, to be omitted from or added to the audio-video coverage. Recordings shall not be performed more than 90 days prior to construction in any area. Recording format shall be MP4 audio-video, minimum 1280 x 720 resolution, and playable using Windows Media Player. CDs and/or DVDs will not be accepted. All flash drives and written records shall become property of the City.

B. Services: The Contractor shall engage the services of a professional electrographer. The color recording shall be prepared by a responsible commercial firm known to be skilled and regularly engaged in the business of preconstruction color audio-video documentation. The electrographer shall furnish to the Engineer a list of all equipment to be used for the audio-video recording, i.e., manufacturer's name, model number, specifications and other pertinent information. Additional information to be furnished by the electrographer is the names and addresses of two references that the electrographer has performed color audio-video recordings for on projects of a similar nature within the last twelve months.

C. Equipment: All equipment, accessories, materials and labor to perform this service shall be furnished by the Contractor.

1. The total audio-video system shall reproduce bright, sharp, clear pictures with accurate colors and shall be free from distortion, tearing, rolls or any other form of imperfection. The audio portion of the recording shall reproduce the commentary of the camera operator with proper volume and clarity, and be free from distortion and interruptions.

2. When conventional wheeled vehicles are used, the distance from the camera lens to the ground shall not be less than twelve feet. In some instances, audio-video coverage may be required in areas not accessible by conventional wheeled vehicles. Such coverage shall be obtained by walking or special conveyance acceptable to the Engineer.

E. Recorded Information - Audio: Each recording shall begin with the current date, project name and municipality and be followed by the general location; i.e., process structure, or area, viewing side and direction of progress. The audio track shall consist of an original live recording. The recording shall contain the narrative commentary of the electrographer, recorded simultaneously with the electrographer fixed elevation video record of the zone of influence of construction.

F. Recorded Information - Video: All video recordings must, by electronic means, display continuously and simultaneously, generated with the actual recording, transparent digital information to include the date and time of recording. The date information shall contain the month, day and year. The time information shall contain the hours, minutes, and seconds. Additional information shall be displayed periodically. Such information shall include, but not be limited to, project name, process structure or area, and the viewing side. This transparent information shall appear on the extreme upper left hand third of the screen.

G. Conditions for Recording: All recording shall be done during times of good visibility. No recording shall be done during precipitation, mist or fog. The recording shall only be done when sufficient sunlight is present to properly illuminate the subjects of recordings and to produce bright, sharp video recordings of those subjects.

H. Video Coverage: Video coverage shall include all surface features located within the zone of influence of construction supported by appropriate audio coverage. Such coverage shall include, but not be limited to, existing driveways, sidewalks, curbs, pavement, landscaping, fences, signs and interior and exterior of existing structures affected by the work and the exteriors of structures adjacent to the work, and any other on-site area that will be occupied or impacted by the Contractor or any of their subcontractors or suppliers within the area covered.

1.15 PROJECT PHOTOGRAPHS

A. The Contractor shall engage and pay for the services of a photographer for ground level progress pictures each month during the course of the construction activities. The photographer's periodic visits and work shall be coordinated with the City. A total of 25 progress photographs in electronic format of completed work is required each month. A photograph (picture) shall be defined as one image. Meta data shall include the following information:

1. Location

2. Name/number of structure

3. Photo Number

4. Date photgraph was taken

5. Description

6. Name of photographer

7. Owner's witness

B. Digital images of each photograph shall be submitted electronically to the Engineer with the Contractor's monthly estimate.

PART 2 – PRODUCTS

(NOT USED)

PART 3 – EXECUTION

(NOT USED)

EQUIPMENT LUBRICATION SCHEDULE

EQUIPMENT ITEM:

EQUIPMENT ID NO.:

EQUIPMENT LOCATION:

EQUIPMENT MANUFACTURER:

ADDRESS:

PHONE:

SERVICE REPRESENTATIVE:

ADDRESS:

PHONE:

MAINTENANCE REQUIREMENTS:

Maintenance Operation	Frequency Running Time / Calendar	Lubricant	Description / Type / Special Tools

Page _____ of _____

NOTE: Use additional sheets as required

EQUIPMENT MAINTENANCE SCHEDULE			
EQUIPMENT ITEM:			
EQUIPMENT ID NO.:			
EQUIPMENT LOCATION:			
EQUIPMENT MANUFACTURER:			
ADDRESS:			
PHONE:			
SERVICE REPRESENTATIVE:			
ADDRESS:			
PHONE:			
MAINTENANCE REQUIREMENTS:			
Maintenance Operation	Frequency Running Time / Calendar	Lubricant	Description / Type / Special Tools

Page _____ of _____

NOTE: Use additional sheets as required.

- END OF SECTION -

Hazen and Sawyer
230 Lexington Green Circle, Suite 520
Lexington, KY 40503 • 859-219-1126

Hazen's Procore Guidelines for Contractors

July, 2017

1. Invitation To Project From Hazen:

1.1. After the pre-construction meeting has been held, Hazen will invite the contractor's project team to Procore. Please provide contact information using the table below for 1) your company and 2) users you wish to add from your company.

Company Information	
Company Name:	
Address:	
City:	
State:	
Zip:	
Business Phone:	
Fax:	

User Information							
First Name	Last Name	Email Address	Address (If different from Company Address)	Business Phone	Cell Phone	Job Title	Folder Tracking For Submittals? (See 2.6)

1.2. Once Hazen has received a Contractor's company and user information, an invitation will be sent to each user. Procore will send two emails: One email invites the user to join Procore, provides a link to set-up an account password, and offers links to download Procore's mobile apps. The second email informs the user that they have been added to a project and provides a link to access the project page in Procore.

1.2.1. Procore invitation email:

Welcome to Procore Inbox x

Hazen and Sawyer <hazen_sawyer_notifications@procoretech.com> 11:19 AM (10 minutes ago)
to me

Hazen and Sawyer

Hazen

Hi Demo Contractor,

You've been invited to join Procore, the online Project Management system for **Hazen and Sawyer**.

Below is the information regarding your account:

Login: sjames0079@gmail.com
Password: Click here to create your new password

Once you have set up your password, you can login to Procore by visiting app.procore.com and entering your Login and Password.

Download Our Free Mobile Apps

Use Procore's free mobile apps to login anywhere from your smartphone or tablet.
Download Procore for iPhone
Download Procore for iPad
Download Procore for Android (smartphones and tablets)

If you have any trouble logging into Procore, please contact Procore's customer support via email at support@procore.com or on the web at http://support.procore.com.

Best Regards,

The Procore Team

Powered by Procore | support@procore.com | http://support.procore.com

Procore uses your provided email as the login. To create your Procore account click the link next to password.

Links to download Procore's mobile apps

1.2.2. Added to Project email:

Test Project: You've been added to a new Project in Procore. Inbox x

Hazen and Sawyer <hazen_sawyer_notifications@procoretech.com> 11:19 AM (24 minutes ago)
to me

Test Project

Hazen

Hi Demo Contractor,

You've been added to the following Project in Procore: Test Project. To Access this Project, click here.

Below is the information regarding your account:

Login: sjames0079@gmail.com
If you haven't already setup your password, or wish to reset it, click here.

If you have any trouble logging into Procore, please contact Procore's customer support via email at support@procore.com or on the web at http://support.procore.com.

Best Regards,

The Procore Team

Powered by Procore | support@procore.com | http://support.procore.com

2. Submittal Upload/Response

2.1. After you have setup your account/password. Go to procore.com. Your login will be the email you provided Hazen. Enter your password created in step 1.2.1. Once logged in, you will be directed to the main "Portfolio" screen as shown below. In this view you will see the main project information (Hazen Project #, Address, City, etc.).

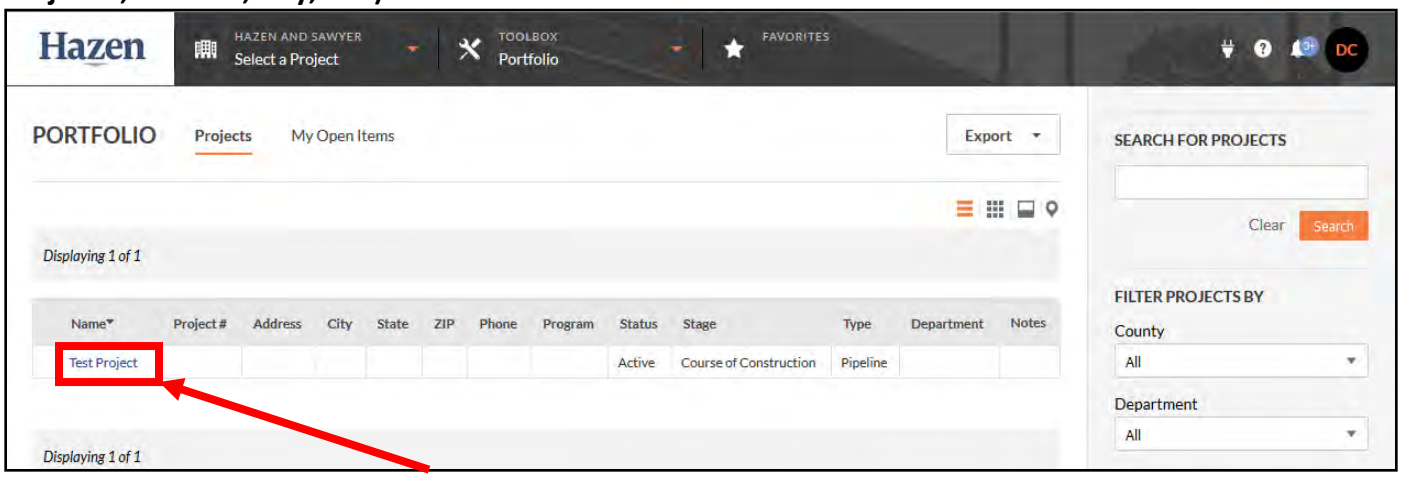

2.2. Click on the project name (blue hyperlink) to access the project's home page as shown below.

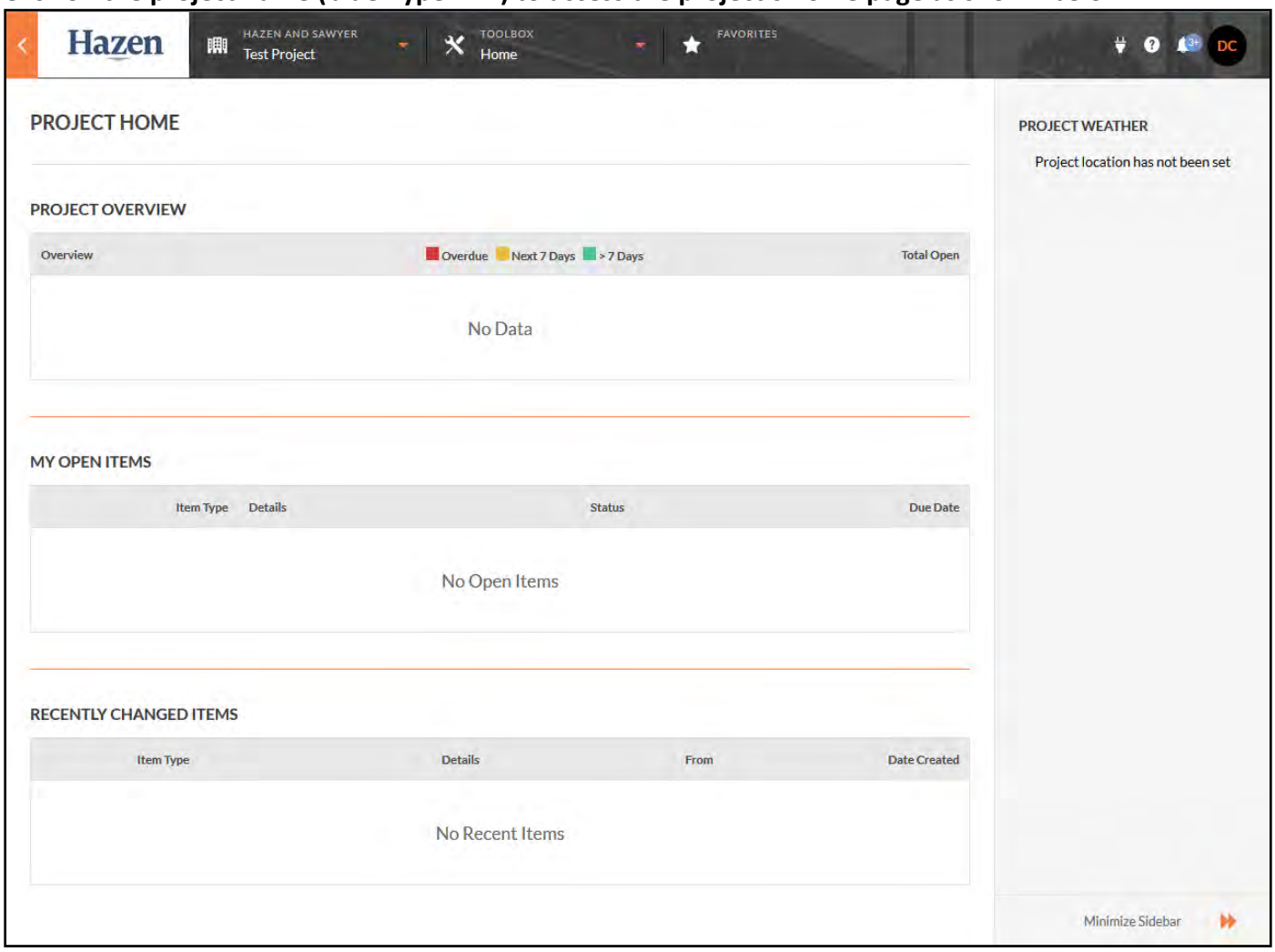

2.3. To upload a submittal for Hazen's review, go to the "Documents" tool by clicking the dropdown arrow under toolbox ribbon.

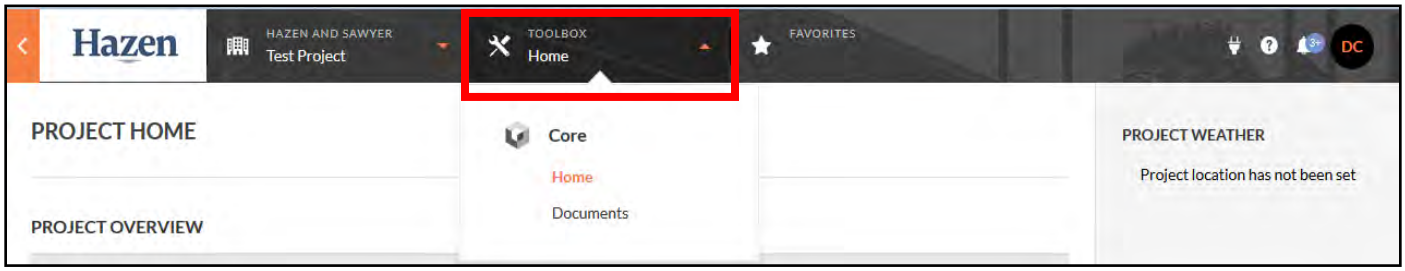

2.3.1. Inside the documents tool, you will see three file folders (Conformed Drawings and Specs, Contractor Uploads, and Finalized Construction Documents).

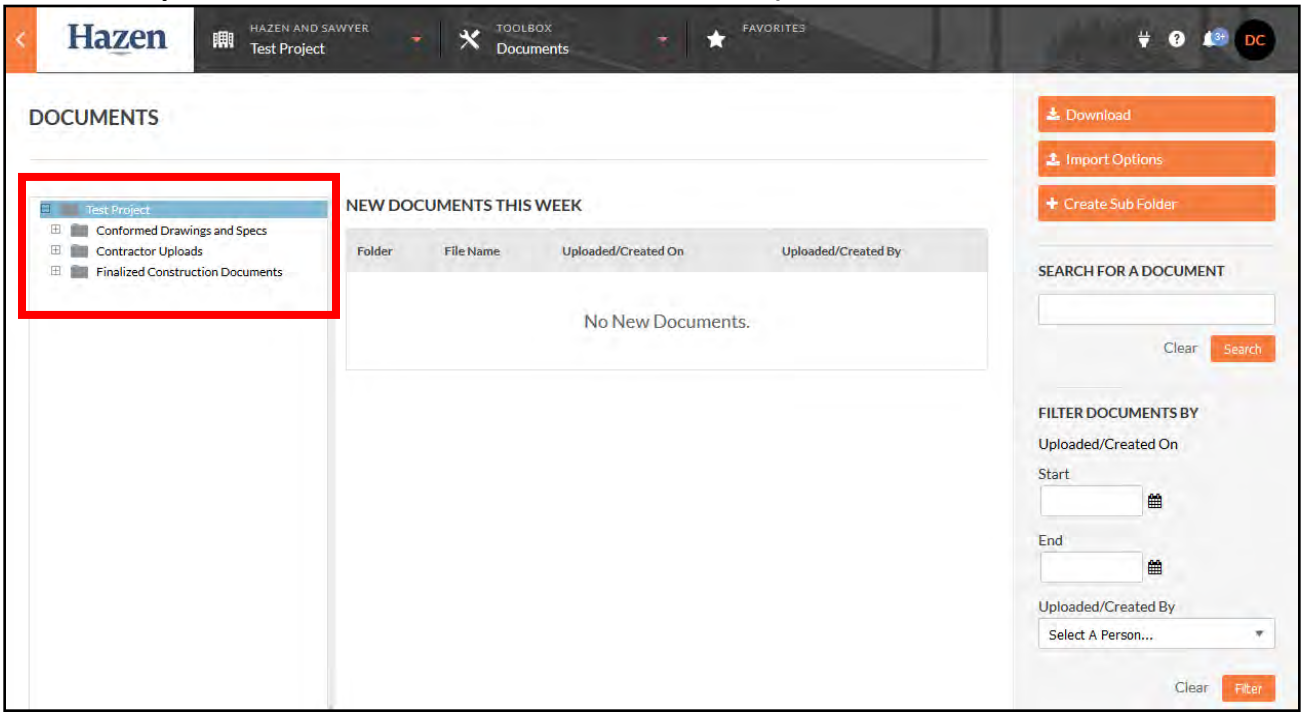

2.3.2. To upload a submittal for review, highlight the Contractor Uploads folder. The middle portion of your screen will update and you will see a box labeled "Upload Files Into Folder". Simply drag and drop a PDF file of the submittal (properly named, spec section-submittal number-revision number) into the grey box. Once the file has fully uploaded, click "Upload".

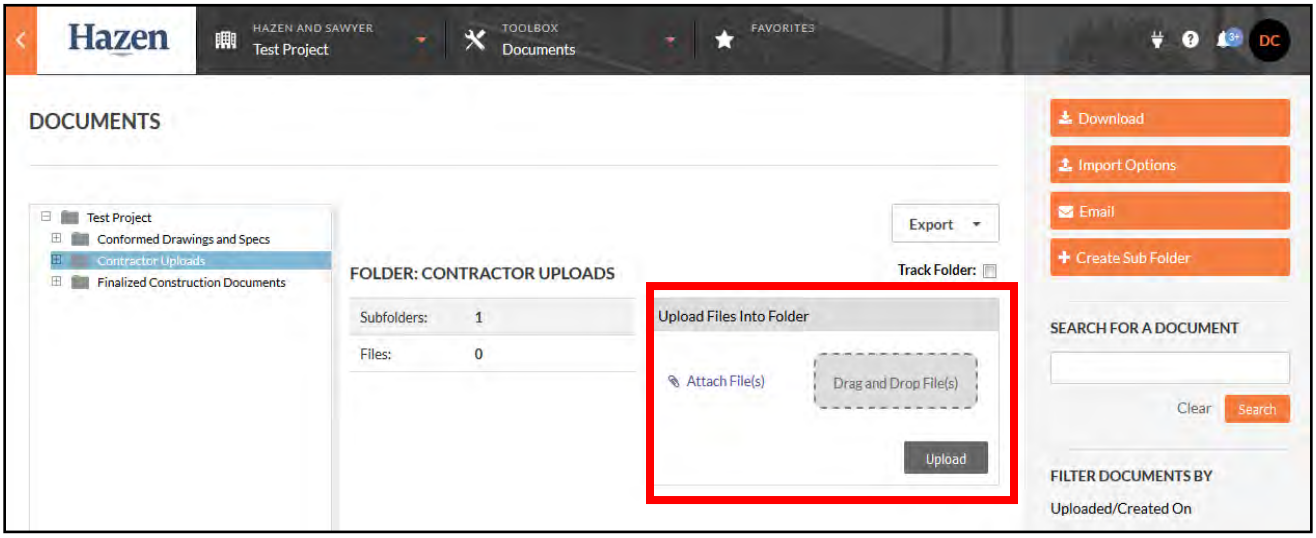

2.4. Once a submittal has been reviewed by Hazen, the Project Manager (PM) or Submittal Coordinator (SC) will upload the review comments to the "Final Submittals and Shop Drawing Comments" folder.

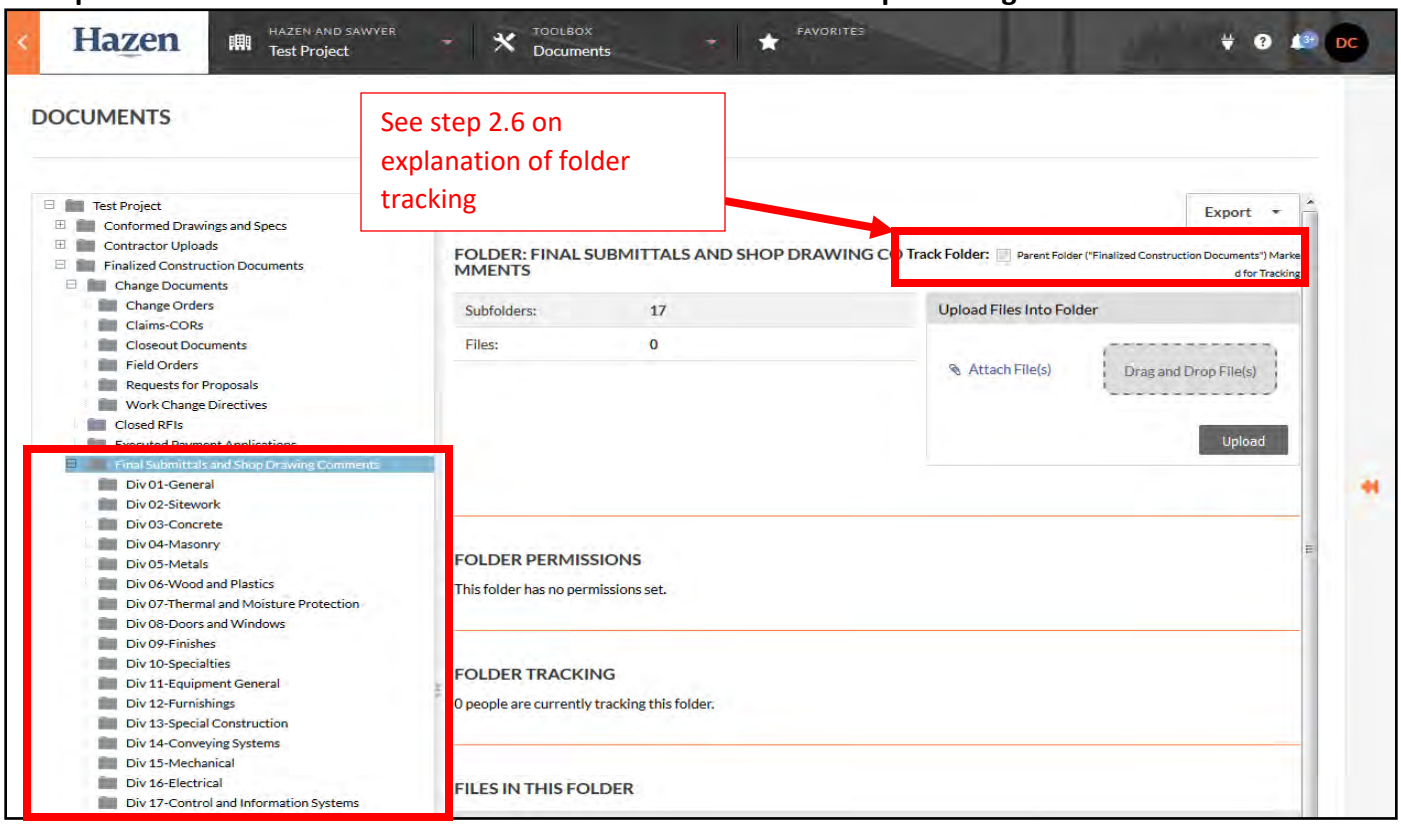

2.5. This process is similar for other documents (Change Documents, RFIs, etc.). Contractor shall upload all documents to the "Contractor Uploads" folder. Once reviewed, Hazen will upload responses to the "Finalized Construction Documents".

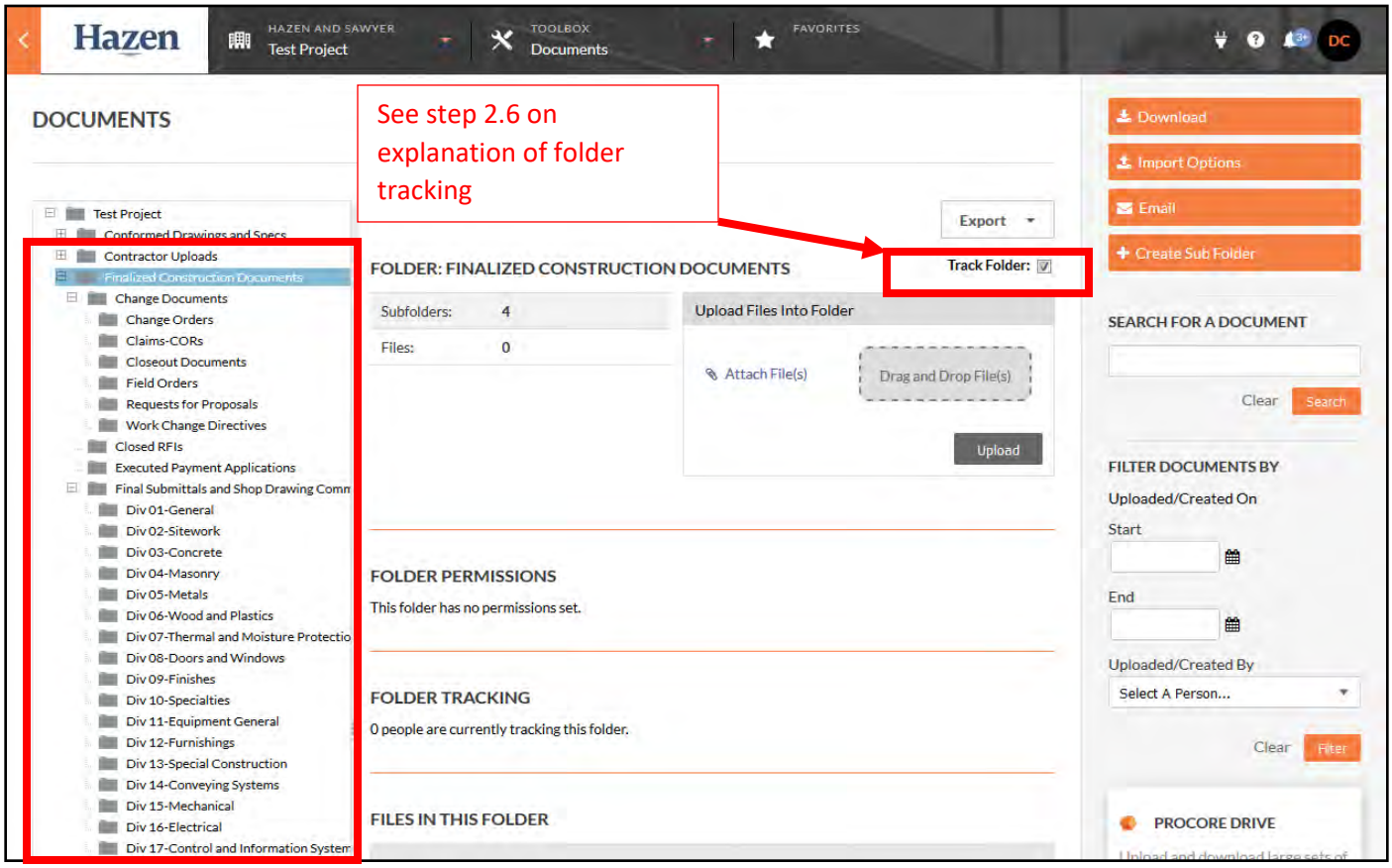

2.6. Hazen's PM/SC will adjust Procore settings so that the Contractor is automatically tracking the "Finalized Construction Documents" folder. This allows Procore to automatically send the Contractor an email when Hazen has uploaded final construction documents (closed RFIs, submittal comments, etc.). As shown below, Procore will send an email stating that "The following item(s) has changed within the Procore Document Management system". You may click on the blue link directly to view the document or you may log into Procore and access the documents tool.

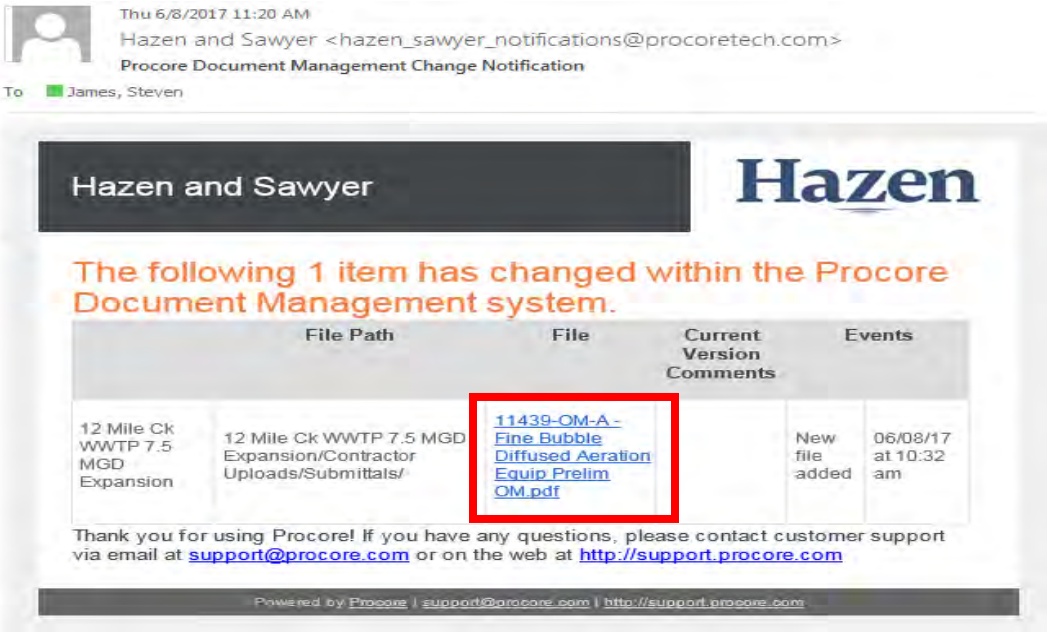

Thu 6/8/2017 11:20 AM
Hazen and Sawyer <hazen_sawyer_notifications@procoretech.com>
Procore Document Management Change Notification
To James, Steven

Hazen and Sawyer

Hazen

The following 1 item has changed within the Procore Document Management system.

	File Path	File	Current Version Comments	Events	
12 Mile Ck WWTP 7.5 MGD Expansion	12 Mile Ck WWTP 7.5 MGD Expansion/Contractor Uploads/Submittals/	11439-OM-A - Fine Bubble Diffused Aeration Equip Prelim OM.pdf		New file added	06/08/17 at 10:32 am

Thank you for using Procore! If you have any questions, please contact customer support via email at support@procore.com or on the web at http://support.procore.com

Powered by Procore | support@procore.com | http://support.procore.com

SECTION 01312

FIELD ENGINEERING

PART 1 – GENERAL

1.01 REQUIREMENTS

A. Contractor shall provide and pay for field Engineering and Survey services required for the project.

B. Identify existing control points and property line corner stakes indicated on the Drawings, as required.

1.02 QUALIFICATIONS OF SURVEYOR

A. Qualified Registered Professional Surveyor & Mapper, acceptable to the City and the Engineer.

1.03 SURVEY REFERENCE POINTS

A. Location and elevation of benchmarks are shown on the Drawings. Identify basic horizontal and vertical control points for the construction project including:

1. Permanent coordinate reference points with horizontal and vertical control, located and staked as shown on the plans.

B. Contractor's Responsibilities:

1. Provide survey and layout required to layout the Work.

2. Check and establish exact location of existing facilities prior to construction of new facilities and any connections thereto.

3. In event of discrepancy in data or benchmarks, request clarification before proceeding with Work.

4. Retain professional land surveyor or civil engineer registered in state of Florida who shall perform or supervise engineering surveying necessary for construction staking and layout.

5. Maintain complete accurate log of survey Work as it progresses as a Record Document.

6. On request of City, submit documentation.

7. Provide competent employee(s), tools, stakes, and other equipment and materials as City may require to:

8. Establish control points, lines, and easement boundaries.

9. Check layout, survey, and measurement Work performed by others.

10. Measure quantities for payment purposes.

C. The Contractor shall locate and protect control points prior to starting site construction work and preserve all permanent reference points during construction.

1. Make no changes or relocations without prior written notice to City.

2. Report to Engineer when any reference point is lost or destroyed, or requires relocation because of necessary changes in grades or locations.

3. Contractor's surveyor shall replace project control points which may be lost or destroyed. Replacements shall be established based on original survey control.

D. Contractor shall be responsible for performing survey and preparing As-Built drawings for all other portions of the work in accordance with Section 01320 – Project Record Documents.

1.04 PROJECT SURVEY REQUIREMENTS

A. Contractor's surveyor shall establish a minimum of two permanent benchmarks on site, referenced to data established by survey control points.

B. Contractor shall establish lines and levels, locate and lay out, prepare a Horizontal and Vertical Control Plan for the purpose of construction staking by instrumentation and similar appropriate means:

1. Stakes for grading and fill placement.

2. Controlling lines and levels as required.

C. From time to time, verify layouts by same methods.

D. Horizontal and vertical control plan shall be made available to City in AutoCAD Civil 3D 2019 format or most current release.

E. Any plan released to the Contractor via electronic media is for as-built use only. They have not been geometrically calculated by a Surveyor. This applies to all aspects of the plans including, but not limited to, right-of-way, road utilities and drainage.

1.05 RECORDS

A. Maintain a complete, accurate log of all control and survey work as it progresses.

B. On completion of construction work, prepare a certified survey showing all dimensions, locations and elevations of project.

1.06 SUBMITTALS

A. Submit name and address of Professional Surveyor & Mapper and Professional Engineer to City and Engineer.

B. On request of City or Engineer, submit documentation to verify accuracy of field engineering work.

C. Submit certificate signed by Registered Engineer or Professional Surveyor & Mapper certifying that elevation and locations of work are in conformance, or non-conformance, with Contract Documents.

PART 2 – PRODUCTS

(NOT USED)

PART 3 – EXECUTION

(NOT USED)

- END OF SECTION -

SECTION 01320

PROJECT RECORD DOCUMENTS

PART 1 – GENERAL

1.01 THE REQUIREMENT

A. The Contractor shall submit Project Record Documents, including As Builts and As Built GIS Database updates as specified herein.

B. Maintain at the site of the City a record copy of:

1. Drawings
2. Specifications
3. Addenda
4. Change Orders and other modifications to the Contract
5. Approved Shop Drawings, Product Data and Samples
6. Field Test Records
7. Stormwater Pollution Prevention Plan (SWPPP)

1.02 MAINTENANCE OF DOCUMENTS AND SAMPLES

A. Store documents and samples in Contractor's field office apart from documents used for construction:

1. Provide files and racks for storage of documents.
2. Provide locked cabinet or secure storage space for storage of samples.

B. File documents and samples in accordance with CSI format.

C. Maintain documents in a clean, dry, legible condition and in good order. Do not use record documents for construction purposes.

D. Make documents and samples available at all times for inspection by City and City Project Manager.

1.03 MARKING DEVICES

A. Provide felt tip marking pens for recording information in the color code designated by Engineer.

1.04 RECORDING

A. Label each document, "PROJECT RECORD" in neat large, printed letters, or by rubber stamp.

B. Record information concurrently with construction progress. Do not conceal any work until required information is recorded.

C. Drawings: Legibly mark to record actual construction: (hard copy and ACAD format)

1. Horizontal and vertical locations of underground utilities and appurtenances, referenced to permanent surface improvements.

2. Location of internal utilities and appurtenances concealed in the construction, referenced to visible and accessible features of the structure.

3. Field changes of dimension and detail.

4. Changes made by Field Order or by Change Order.

5. Details not on original Contract Drawings.

D. Specifications and Addenda; Legibly mark each Section to record:

1. Manufacturer, trade name, catalog number, and supplier of each produce and item of equipment actually installed.

2. Changes made by Field Order or by Change Order.

1.05 AS-BUILT AND RECORD DRAWINGS

A. The term ‘As-Built Drawing’ refers to drawings signed and sealed by a Florida registered surveyor and mapper (PSM) provided by the Contractor. As-built information will be provided to the Engineer of Record for review. Contractor will prepare record drawings based on as-built information.

B. The as-built drawings cover sheet will be signed, sealed and dated by the PSM. The cover sheet will include the PSM’s name, business name, PSM number, address and telephone number and contain the following statement:

> “I hereby certify that the as-built location information of the potable water, reclaimed water, wastewater and drainage facilities shown on these drawings conforms to the minimum technical standards for land surveying in the State of Florida, Chapter 5J-17.050(10)(i) (Florida Administrative Code), as adopted by the Department of Agriculture and Consumer Services, Board of Professional Surveyors and Mappers, and that said as-builts are true and correct to the best of our knowledge and belief.”

C. As-builts will contain the information on the design drawings, plus the following additional requirements:

1. As-builts are to document changes between the design and construction. All information that is incorrect due to changes during construction will be corrected.

Incorrect or no longer relevant information will be erased or struck through. Any facilities constructed in a horizontal or vertical location materially different (one-tenth foot horizontal, one-tenth foot vertical) than the design location will have their design location struck through and will be redrafted at the constructed location. Design drawing dimensioning to water and wastewater facilities will be corrected as necessary.

2. Drawings will be a complete set including cover sheet, index (if one was included in the approved design drawings) and any other sheets included in the approved design set. Standard detail sheets are not necessary.

3. Drawings will include the Minimum As-Built and Record Drawing Contents described in the City of Fort Lauderdale minimum standards.

D. The Contractor shall maintain full size (24"x36" or 22”x34”) field drawings to reflect the "as-built" items of Work as the Work progresses. Upon completion of the work the Contractor shall prepare a record set of "AS-BUILT" Drawings on full-size, reproducible material and an electronic file in .DWG format (AutoCAD, latest Version). One set of full size design Drawings on reproducible material will be furnished to the Contractor by the design Engineer at the current square foot price. An electronic file of the design Drawings will be furnished to the Contractor by the Engineer at no additional cost (for as-built purposes only). No additional payment will be made for those "as-built" Drawings.

E. The cost of maintaining record changes, and preparation of the AS-BUILT Drawings shall be included in the unit prices bid for the affected items. Upon completion of the Work, the Contractor shall furnish the City Project Manager the reproducible AS-BUILT Drawings and electronic files. The completed AS-BUILT Drawings shall be delivered to the City Project Manager at least 48 hours prior to final inspection of the Work. The Final Inspection will not be conducted unless the AS-BUILT Drawings are in the possession of the City Project Manager.

F. The completed As-Built Drawings shall be certified by a Professional Surveyor and Mapper registered in the State of Florida. This certification shall consist of the surveyor's embossed seal bearing the registration number, the surveyor's signature and date on each sheet of the drawing set. In addition, the key sheet, cover sheet or first sheet of the plans set shall list the business address and telephone number of the surveyor. The final as-builts shall also be submitted using state plane coordinates. (NAVD 1988 for vertical; NAD '83 with '90 adjustment for horizontal).

G. Representative items of Work that should be shown on the record Drawings as verified, changed or added are shown below:

1. <u>Plans:</u>

a. Structure types, location with grade of rim and flow-line elevations.

b. Pipe type, length, size and elevations.

c. Utility type, length, size and elevation in conflict structures.

d. All maintenance access structures, valves and hydrants within right-of-way.

e. Spot (critical) elevations at plateaued intersections. (P.C., P.T., and mid point of all intersections, etc.)

f. Sewer laterals shall be stationed between maintenance access structures.

2. Pavement Marking and Signing Plans: Sign location where installed if different from plans.

3. Water and Sewer Plans: Location (horizontal and vertical) of all pipe lines, structures, fittings, services, valves and appurtenances, and water main / sanitary sewer pipe crossings.

H. The Contractor shall submit an electronic set of progress As-Built Drawings with each application for payment. These Drawings shall accurately depict the Work completed and for which payment is being requested.

I. The term 'Record Drawing' refers to the final drawing set signed and sealed by the Engineer of Record. The Engineer of Record will prepare or have prepared record drawings based on as-built information provided by the PSM and from information provided by the Engineer's staff. The Engineer of Record shall retain the signed and sealed 'as-built' drawings provided by the PSM with the other project records for possible review by City upon request. Record Drawings shall meet the requirements of the Contract Documents.

J. As-Built and Record Drawings shall include the following contents at a minimum.

1. The amount of information required on as-built and record drawings will require the drawing author to organize its presentation in order to make the drawings readable. On occasion, it may be necessary to put stormwater, water, and wastewater information on separate sheets, and/or use a table to show coordinate information.

2. Show the location of easements used by the stormwater, water, and wastewater facilities.

3. Indicate pipe joint locations where stormwater, water, wastewater or reclaimed water piping crosses.

4. Indicate the length of gravity stormwater and wastewater piping and actual slope between manhole centers.

5. Show all abandoned in place facilities including the extent and method of abandonment.

6. Show elevations to the nearest tenth of a foot for:

a. Top of pipe for elevations at vertical deflection points and every 200 feet along straight runs.

b. Top of pipe of stormwater, water, or wastewater facilities where they cross all other facilities (drainage, telephone, cable TV, electric, etc.)

7. Show elevations to the nearest one hundredth of a foot for:
   a. Manholes (MH) rims.
   b. Inverts of every gravity wastewater and stormwater pipe and force main connections to MH.
   c. Lift station top of slab, bottom of wet well, influent pipe invert and control set points.
8. Coordinates will be provided for City maintained facilities, including:
   a. Water mains, force mains and reclaimed water mains at deflection points and every 200 feet along straight runs.
   b. The center of each MH, fitting, valve, blow off, hydrant, water meter box, wastewater cleanout, lift station wetwell, double detector check or other non-pipe water or wastewater facility.
   c. The location of each connection to existing facilities.
   d. The corners (vertices) of all easements being granted to the City as a part of the project.
   e. Other locations designated by City.
9. Show the changed location of any non-water/wastewater/stormwater features so they are at the visually correct location relative to City maintained facilities.
10. Drawings shall include color photographs of all connections to existing City infrastructure as well as all critical utility crossings and where specifically required on the design drawings. The pictures will be taken with a GPS camera that automatically geotags the picture. A maximum of six photographs per sheet is acceptable. Each photograph shall have a minimum size of 8”x10”. Photographs shall have a density of 3.0 megapixel or greater. Plot resolution is to be minimum 300 dots per inch. Photographs shall normally be taken from a point between four feet (4’) and six feet (6’) above the subject infrastructure and shall show good detail in both shadow and sunlit areas. Include a measuring device in the photo for scale and where applicable to indicate the depth or separation of the utilities. A symbol (i.e. an arrow) is to be used in the plan views indicating the location and direction of view for each photograph submitted. The symbol must include the photograph number. A caption under each photograph shall include the following information:
    a. Photograph number
    b. Photograph description
    c. Date of photograph
    d. Location and direction of view (for example 201 NW 34 Street looking North)
    e. State plane coordinates
    f. All photographs included in the drawings will also be provided to City in JPEG format on CD or DVD media. The CD or DVD will be labeled with the City project name and number. Individual photo files will be named using the same photograph number contained in the drawings.

11. The size and material of the piping shall be verified by the survey crew at the time of as-built.

12. As-builts of all drainage lines shall include the following information:

    a. Rims, inverts, length of piping between structures, length of exfiltration trench, and weir elevations if applicable.

    b. The size and material of the piping shall be verified by the survey crew at the time of as-built.

13. As-builts for the edge of pavement and sidewalk locations shall include horizontal locations and shall indicate all deviations from the design plans.

14. All rock as-builts for parking lot, roadways and swales areas shall consist of the following:

    a. Rock elevations at all high and low points, and at enough intermediate points to confirm slope consistency and every 50' for roadways.

    b. Rock as-builts shall be taken at all locations where there is a finish grade elevation shown on the design plans.

    c. All catch basin and maintenance access structure rim elevations shall be shown.

    d. Elevations around island areas will also be required.

    e. As-builts shall be taken on all paved and unpaved swales prior to placement of asphalt and/or topsoil/sod, at enough intermediate points to confirm slope consistency and conformance to the plan details.

    f. Note: Rock as-builts required prior to paving. Consultant shall review rock as-builts within five days of receipt.

15. Lake and canal bank as-builts shall include a key sheet of the lake for the location of cross sections. Lake and canal bank cross sections shall be plotted at a minimum of every 100 lf, unless otherwise specified. As-builts shall consist of the location and elevation of the top of bank, edge of water and the deep cut line, with the distance between each shown on the drawing.

16. Retention area as-built elevations shall be taken at the bottom of the retention area and at the top of bank. If there are contours indicated on the design plans, then they shall be as-built as well.

17. If a change is made via field order or deviation to any structure, pipeline, etc., a new location shall be noted on the as-builts. The City Project Manager may request additional as-built information to verify horizontal or vertical locations.

1.06 AS BUILT GIS DATABASE REQUIREMENTS

A. The Contractor shall submit updates to the City's GIS database cataloging the

constructed stormwater infrastructure. Updates shall be in accordance with the City's latest geodatabase and corresponding Geodatabase Data Dictionary. The Geodatabase Data Dictionary is provided as an attachment to this specification.

B. Contractor shall enter location and attribute information collected from survey field work and final As-Built Drawings into a City issued geodatabase template. The City shall provide a template in Microsoft Excel format to be used for data entry. This template will adhere to the City's geodatabase schema for feature classes, related tables, and domain tables. The asset types to be collected and delivered shall include, but not limited to, the following assets:

1. Control valves
2. Exfiltration trenches
3. Gravity mains
4. Pressurized mains
5. Inlets
6. Manholes
7. Network structures (including pump stations or pipe ends)
8. Inline valves
9. Outfalls

C. Attribute types shall be coordinated with the City but shall adhere to the requirements of the City's Geodatabase Data Dictionary.

1.07 SUBMITTAL

A. Submittals of final As-Built Drawings shall be made with monthly payment applications and at the completion of the entire project. At Contract closeout, deliver all Record Documents to City Project Manager, for presentation to the City.

B. A complete set of As-Built Drawings shall be prepared and delivered to the City Project Manager. Work shall be performed by a Registered Professional Surveyor and Mapper shall include, but not be limited to the following:

1. Valve boxes, splice boxes, pull boxes, all underground utilities-waterlines, electrical runs, irrigation system, storm drainage pipe and structures, sanitary sewer lines and structures, finished necessary grades, benches, curbs, fences, walls, signs, light fixtures and other items as necessary in accordance with City Record Plan/As-built plan requirements.

C. Submittal of the draft As-Built GIS Database shall be done electronically. The Engineer will review the Excel file for completeness. The City shall provide written comments on the submittal. The Contractor shall provide a written response for each comment. The Contractor shall make revisions to the Excel file and submit both the responses to the

comments and the revised database file for review by the Engineer and the City. Should further modifications of GIS database file be required, the Contractor shall make these modifications at no additional cost to the City.

D. Accompany all submittals with transmittal letters in duplicate, containing:

1. Date.
2. Project title and number.
3. Contractor's name and address.
4. Title and number of each Record Document.
5. Signature of Contractor or authorized representative.

PART 2 – PRODUCTS

(NOT USED)

PART 3 – EXECUTION

(NOT USED)

- END OF SECTION -

Geodatabase Documentation

Date: Monday, July 6, 2020
Time: 2:44:41 PM

Summary Information and Links

0 Feature Datasets and 13 Feature Classes
No Topology Datasets
No Geometric Networks
No Rasters
16 Tables (Object Classes)
13 Relationship Classes
30 Domains

Feature Datasets and Child Classes

Rasters

Workspace-Level Tables and Feature Classes

DynamicValue - Table
GDB_ServiceItems - Table
GenerateId - Table
ssBendReference - Table
ssCleanOutReference - Table
ssControlValveReference - Table
ssEmergencyOverflowReference - Table
ssFittingReference - Table
ssGravityMainReference - Table
ssLateralLineReference - Table
ssManholeReference - Table
ssNetworkStructureReference - Table
ssPressurizedMainReference - Table
ssPumpStationReference - Table
ssServiceConnectionReference - Table
ssSystemValveReference - Table
ssBend - Feature Class
ssCleanOut - Feature Class
ssControlValve - Feature Class
ssEmergencyOverflow - Feature Class
ssFitting - Feature Class
ssGravityMain - Feature Class
ssLateralLine - Feature Class
ssManhole - Feature Class
ssNetworkStructure - Feature Class
ssPressurizedMain - Feature Class
ssPumpStation - Feature Class
ssServiceConnection - Feature Class
ssSystemValve - Feature Class

Relationship Classes

ssBendReferenceRC
ssCleanOutReferenceRC
ssControlValveReferenceRC
ssEmergencyOverflowReferenceRC
ssFittingReferenceRC

ssGravityMainReferenceRC
ssLateralLineReferenceRC
ssManholeReferenceRC
ssNetworkStructureReferenceRC
ssPressurizedMainReferenceRC
ssPumpStationReferenceRC
ssServiceConnectionReferenceRC
ssSystemValveReferenceRC

Domains

AncillaryRoleDomain
AssetManager
AssetOwner
BooleanDomain
ControlSetRef
Datum
Direction
EnabledDomain
InventoryClass
piAccessDiameter
piAccessType
piActiveStatus
piCleanoutTypes
piConditionPACP
piControlValveType
piDischargePointType
piFittingType
piLiningMethod
piManholeCoverType
piManholeType
piPipeDiameter
piPipeMaterial
piPipeShape
piSystemValveType
ssNetworkStructureType
ssPumpStationType
ssValveUse
ssWaterType
ValueMethod
YesNo

---

ssBend - FeatureClass

Name	ssBend
ShapeType	Point
FeatureType	Simple
AliasName	ss Bends
HasM	false
HasZ	false
HasAttachments	false
Description	Bends in sanitary sewer.

Field	DataType	Length	AliasName	Description	Domain	DefaultValue	IsNullable	Precision	Scale
FACILITYNUM	Integer	4	Facility Number	Locally asssigned numeric unique identifier populated by database admin		0	true		

				created database trigger					
FACILITYID	String	20	Facility Identifier	Locally asssigned alpha-numeric unique identifier populated by database admin created database trigger			true		
LEGACYID	String	20	Legacy ID (Unit ID)	Former asset identifier. To be moved to a related table.			true		
ACTIVESTATUS	String	20	Active Status	Identifies whether the asset is in use, not in use or removed from the ground	piActiveStatus	Active	true		
ACTIVEFLAG	SmallInteger	2	Active Flag	Identifies whether the feature is in use/active	BooleanDomain	1	true		
INVCLASS	String	20	Inventory Class	The method used to establish the geographic location of the asset	InventoryClass		true		
COLLECTEDDATE	Date	8	GPS Collected Date	Date the feature was located by a surveyor			true		
OWNEDBY	SmallInteger	2	Owned By	Indicates which organization owns the asset	AssetOwner	1	true		
MAINTBY	SmallInteger	2	Maintained By	Indicates which organization maintains the asset	AssetManager	1	true		
INSTALLDATE	Date	8	Install Date	The date the asset was installed			true		
INLETDIAM	Double	8	Inlet Diameter	Diameter of pump inlet	piPipeDiameter		true		
DISCHDIAM	Double	8	Discharge Diameter	Diameter of pump discharge	piPipeDiameter		true		
BENDANGLE	String	3	Angle	Angle			true		
BENDRADIUS	String	3	Radius	Radius			true		
LOCATION	String	200	Location Description	Identifies the meter box location (area_served in Utility Billing database). Value is copied to Cityworks work order Location Details field when attached to a work order.			true		
ADDRESS	String	50	Address	The address or closest address to the asset. Value is copied to Cityworks work order Address field when attached			true		

				to a work order (address in Utility Billing database)					
PURCHASEDATE	Date	8	Purchase Date	The purchase date of the asset. Used for future asset management analysis.			true		
WARRANTYDATE	Date	8	Warranty Date	The date the warranty expires on the asset. If populated and asset is still under warranty, asset record will show up pink on the Cityworks work order.			true		
ASSETCOST	Double	8	Asset Cost	The replacement cost of the asset. If populated, this will be used for asset management analysis and repair/replace decisions.		0	true		
CONDITION	SmallInteger	2	Condition Rating	The condition rating of the asset. Used by Cityworks Analytics for condition analysis output. May be calculated within a Cityworks Inspection and updated from there to GIS.	piConditionPACP		true		
CONDITIONDATE	Date	8	Condition Date	The date of the last condition assessment. Can be updated from Cityworks Inspection to the GIS.			true		
SERVICELIFE	SmallInteger	2	Service Life	The expected number of years an asset is physically capable of continuing to operate. Used to anticipate retirement of assets and project funding needs.		0	true		
RUL	SmallInteger	2	Remaining Useful Life	The Remaining Useful Life of an asset calculated by subtracting the number of years since installation, from the sevice life. It will be heavily		0	true		

				relied upon for asset management analysis.					
COF	SmallInteger	2	Consequence of Failure	The consequence of failure. Used in the BRE model as the impact due to asset failure.		0	true		
POF	SmallInteger	2	Probability of Failure	Probability of Failure. Used in the BRE model to estimate the likelihood the predicted asset (or service) failure will occur and is adjusted for backup and redundancy of the asset.		0	true		
BRE	SmallInteger	2	Business Risk Exposure	Business Risk Exposure is a the product of probablity of failure (POF) and consequence of failure (COF). Values range from 1 (low risk) to 100 (high risk) and is used to prioritize investments.		0	true		
LASTINSPECTDATE	Date	8	Last Inspection Date	The date the asset was most recently inspected			true		
LASTMAINTDATE	Date	8	Last Maintenance Date	The date of the most recent maintenance activity			true		
MANUFACTURER	String	50	Manufacturer	The manufacturer or brand of the asset (company_cd in Utility Billing database)			true		
PROJECTNUM	String	32	City Project Number	The City's Project Number under which the asset was installed			true		
FILENUM	String	32	City File Number	The City's File Number			true		
WORKORDERNUM	String	60	City Work Order Number	The work order number for performing work on the asset (Cityworks, Qalert, etc)			true		
SURVEYRPTNUM	String	32	Survey Report Number	The City's Surveyor's Report Number under which the location of an			true		

				asset or group of assets are captured, may be the same as the Service Request or Work Order Number					
XYCONVERTED	String	5	X, Y Converted	X, Y Converted	YesNo		true		
XCOORD	Double	8	X Coordinate	X-Coordinate of the asset (FL State Plane-East)		0	true		
YCOORD	Double	8	Y Coordinate	Y-Coordinate of the asset (FL State Plane-East)		0	true		
ZCOORD	Double	8	Z Coordinate	Z-Coordinate of the asset		0	true		
ANCILLARYROLE	SmallInteger	2	Ancillary Role	Identifies whether the asset participates in a geometric network as either a source or a sink	AncillaryRoleDomain	0	true		
ROTATION	Double	8	Rotation	Map symbol rotation value		0	true		
ENABLED	SmallInteger	2	Enabled Flag	Indicates if the asset is enabled within a geometric network.	EnabledDomain	1	true		
FIELDNOTES	String	255	Field Notes	Comments or notes from field staff, including surveyors, that are relevant to the asset			true		
SIZENOTES	String	10	Size Notes	Size Notes			true		
NOTES	String	200	GIS Notes	GIS entry notes or comments relevant to the asset			true		
created_user	String	255	created_user	created_user			true		
created_date	Date	8	created_date	created_date			true		
last_edited_user	String	255	last_edited_user	last_edited_user			true		
last_edited_date	Date	8	last_edited_date	last_edited_date			true		

---

ssCleanOut - FeatureClass

Name ssCleanOut
ShapeType Point
FeatureType Simple
AliasName ss Clean Outs
HasM false
HasZ false
HasAttachments false
Description Sanitary sewer cleanout access points.

Field	DataType	Length	AliasName	Description	Domain	DefaultValue	IsNullable	Precision	Scale
FACILITYNUM	Integer	4	Facility Number	Locally asssigned numeric unique identifier		0	true		

				populated by database admin created database trigger					
FACILITYID	String	20	Facility Identifier	Locally asssigned alpha-numeric unique identifier populated by database admin created database trigger			true		
LEGACYID	String	20	Legacy ID (Unit ID)	Former asset identifier. To be moved to a related table.			true		
ACTIVESTATUS	String	20	Active Status	Identifies whether the asset is in use, not in use or removed from the ground	piActiveStatus	Active	true		
ACTIVEFLAG	SmallInteger	2	Active Flag	Identifies whether the feature is in use/active	BooleanDomain	1	true		
INVCLASS	String	20	Inventory Class	The method used to establish the geographic location of the asset	InventoryClass		true		
COLLECTEDDATE	Date	8	GPS Collected Date	Date the feature was located by a surveyor			true		
OWNEDBY	SmallInteger	2	Owned By	Indicates which organization owns the asset	AssetOwner	1	true		
MAINTBY	SmallInteger	2	Maintained By	Indicates which organization maintains the asset	AssetManager	1	true		
INSTALLDATE	Date	8	Install Date	The date the asset was installed			true		
DEVICETYPE	String	30	Device Type	The type of backflow device reported	piCleanoutTypes	Cleanout	true		
LOCATION	String	200	Location Description	Identifies the meter box location (area_served in Utility Billing database). Value is copied to Cityworks work order Location Details field when attached to a work order.			true		
ADDRESS	String	50	Address	The address or closest address to the asset. Value is copied to Cityworks work order Address field when attached to a work order (address in			true		

				Utility Billing database)					
PURCHASEDATE	Date	8	Purchase Date	The purchase date of the asset. Used for future asset management analysis.			true		
WARRANTYDATE	Date	8	Warranty Date	The date the warranty expires on the asset. If populated and asset is still under warranty, asset record will show up pink on the Cityworks work order.			true		
ASSETCOST	Double	8	Asset Cost	The replacement cost of the asset. If populated, this will be used for asset management analysis and repair/replace decisions.		0	true		
CONDITION	SmallInteger	2	Condition Rating	The condition rating of the asset. Used by Cityworks Analytics for condition analysis output. May be calculated within a Cityworks Inspection and updated from there to GIS.	piConditionPACP		true		
CONDITIONDATE	Date	8	Condition Date	The date of the last condition assessment. Can be updated from Cityworks Inspection to the GIS.			true		
SERVICELIFE	SmallInteger	2	Service Life	The expected number of years an asset is physically capable of continuing to operate. Used to anticipate retirement of assets and project funding needs.		0	true		
RUL	SmallInteger	2	Remaining Useful Life	The Remaining Useful Life of an asset calculated by subtracting the number of years since installation, from the sevice life. It will be heavily relied upon for asset		0	true		

				management analysis.					
COF	SmallInteger	2	Consequence of Failure	The consequence of failure. Used in the BRE model as the impact due to asset failure.		0	true		
POF	SmallInteger	2	Probability of Failure	Probability of Failure. Used in the BRE model to estimate the likelihood the predicted asset (or service) failure will occur and is adjusted for backup and redundancy of the asset.		0	true		
BRE	SmallInteger	2	Business Risk Exposure	Business Risk Exposure is a the product of probablity of failure (POF) and consequence of failure (COF). Values range from 1 (low risk) to 100 (high risk) and is used to prioritize investments.		0	true		
LASTINSPECTDATE	Date	8	Last Inspection Date	The date the asset was most recently inspected			true		
LASTMAINTDATE	Date	8	Last Maintenance Date	The date of the most recent maintenance activity			true		
MANUFACTURER	String	50	Manufacturer	The manufacturer or brand of the asset (company_cd in Utility Billing database)			true		
PROJECTNUM	String	32	City Project Number	The City's Project Number under which the asset was installed			true		
FILENUM	String	32	City File Number	The City's File Number			true		
WORKORDERNUM	String	60	City Work Order Number	The work order number for performing work on the asset (Cityworks, Qalert, etc)			true		
SURVEYRPTNUM	String	32	Survey Report Number	The City's Surveyor's Report Number under which the location of an asset or group of assets are			true		

				captured, may be the same as the Service Request or Work Order Number					
ACCESSDIAM	Double	8	Access Diameter	Access diameter for the inlet	piAccessDiameter	0	true		
ACCESSMAT	String	20	Access Material	The material used to construct the access cover	piPipeMaterial		true		
ACCESSTYPE	String	20	Access Type	Method for accessing the opening	piAccessType	Cover	true		
INTDEPTH	Double	8	Interior Depth	Interior Depth		0	true		
XYCONVERTED	String	5	X, Y Converted	X, Y Converted	YesNo		true		
XCOORD	Double	8	X Coordinate	X-Coordinate of the asset (FL State Plane-East)		0	true		
YCOORD	Double	8	Y Coordinate	Y-Coordinate of the asset (FL State Plane-East)		0	true		
ZCOORD	Double	8	Z Coordinate	Z-Coordinate of the asset		0	true		
ANCILLARYROLE	SmallInteger	2	Ancillary Role	Identifies whether the asset participates in a geometric network as either a source or a sink	AncillaryRoleDomain	0	true		
ROTATION	Double	8	Rotation	Map symbol rotation value		0	true		
ENABLED	SmallInteger	2	Enabled Flag	Indicates if the asset is enabled within a geometric network.	EnabledDomain	1	true		
FIELDNOTES	String	255	Field Notes	Comments or notes from field staff, including surveyors, that are relevant to the asset			true		
SIZENOTES	String	10	Size Notes	Size Notes			true		
NOTES	String	200	GIS Notes	GIS entry notes or comments relevant to the asset			true		
created_user	String	255	created_user	created_user			true		
created_date	Date	8	created_date	created_date			true		
last_edited_user	String	255	last_edited_user	last_edited_user			true		
last_edited_date	Date	8	last_edited_date	last_edited_date			true		

ssControlValve - FeatureClass

Name	ssControlValve
ShapeType	Point
FeatureType	Simple
AliasName	ss Control Valves
HasM	false
HasZ	false

HasAttachments false

Description Sanitary sewer network valves that have a flow control mechanism.

Field	DataType	Length	AliasName	Description	Domain	DefaultValue	IsNullable	Precision	Scale
FACILITYNUM	Integer	4	Facility Number	Locally asssigned numeric unique identifier populated by database admin created database trigger		0	true		
FACILITYID	String	20	Facility Identifier	Locally asssigned alpha-numeric unique identifier populated by database admin created database trigger			true		
LEGACYID	String	20	Legacy ID (Unit ID)	Former asset identifier. To be moved to a related table.			true		
VALVETYPE	String	30	Valve Type	Type of control valve	piControlValveType		true		
DIAMETER	Double	8	Diameter	Identified the size of meter (meter_sz in Utility Billing database)	piPipeDiameter		true		
ACTIVESTATUS	String	20	Active Status	Identifies whether the asset is in use, not in use or removed from the ground	piActiveStatus	Active	true		
ACTIVEFLAG	SmallInteger	2	Active Flag	Identifies whether the feature is in use/active	BooleanDomain	1	true		
INVCLASS	String	20	Inventory Class	The method used to establish the geographic location of the asset	InventoryClass		true		
COLLECTEDDATE	Date	8	GPS Collected Date	Date the feature was located by a surveyor			true		
OWNEDBY	SmallInteger	2	Owned By	Indicates which organization owns the asset	AssetOwner	1	true		
MAINTBY	SmallInteger	2	Maintained By	Indicates which organization maintains the asset	AssetManager	1	true		
INSTALLDATE	Date	8	Install Date	The date the asset was installed			true		
LOCATION	String	200	Location Description	Identifies the meter box location (area_served in Utility Billing database). Value is copied to Cityworks work order Location			true		

				Details field when attached to a work order.					
ADDRESS	String	50	Address	The address or closest address to the asset. Value is copied to Cityworks work order Address field when attached to a work order (address in Utility Billing database)			true		
PURCHASEDATE	Date	8	Purchase Date	The purchase date of the asset. Used for future asset management analysis.			true		
WARRANTYDATE	Date	8	Warranty Date	The date the warranty expires on the asset. If populated and asset is still under warranty, asset record will show up pink on the Cityworks work order.			true		
ASSETCOST	Double	8	Asset Cost	The replacement cost of the asset. If populated, this will be used for asset management analysis and repair/replace decisions.		0	true		
CONDITION	SmallInteger	2	Condition Rating	The condition rating of the asset. Used by Cityworks Analytics for condition analysis output. May be calculated within a Cityworks Inspection and updated from there to GIS.	piConditionPACP		true		
CONDITIONDATE	Date	8	Condition Date	The date of the last condition assessment. Can be updated from Cityworks Inspection to the GIS.			true		
SERVICELIFE	SmallInteger	2	Service Life	The expected number of years an asset is physically capable of continuing to operate. Used to anticipate retirement of assets and		0	true		

				project funding needs.					
RUL	SmallInteger	2	Remaining Useful Life	The Remaining Useful Life of an asset calculated by subtracting the number of years since installation, from the sevice life. It will be heavily relied upon for asset management analysis.		0	true		
COF	SmallInteger	2	Consequence of Failure	The consequence of failure. Used in the BRE model as the impact due to asset failure.		0	true		
POF	SmallInteger	2	Probability of Failure	Probability of Failure. Used in the BRE model to estimate the likelihood the predicted asset (or service) failure will occur and is adjusted for backup and redundancy of the asset.		0	true		
BRE	SmallInteger	2	Business Risk Exposure	Business Risk Exposure is a the product of probablity of failure (POF) and consequence of failure (COF). Values range from 1 (low risk) to 100 (high risk) and is used to prioritize investments.		0	true		
LASTINSPECTDATE	Date	8	Last Inspection Date	The date the asset was most recently inspected			true		
LASTMAINTDATE	Date	8	Last Maintenance Date	The date of the most recent maintenance activity			true		
MANUFACTURER	String	50	Manufacturer	The manufacturer or brand of the asset (company_cd in Utility Billing database)			true		
PROJECTNUM	String	32	City Project Number	The City's Project Number under which the asset was installed			true		
FILENUM	String	32	City File Number	The City's File Number			true		

WORKORDERNUM	String	60	City Work Order Number	The work order number for performing work on the asset (Cityworks, Qalert, etc)			true		
SURVEYRPTNUM	String	32	Survey Report Number	The City's Surveyor's Report Number under which the location of an asset or group of assets are captured, may be the same as the Service Request or Work Order Number			true		
XYCONVERTED	String	5	X, Y Converted	X, Y Converted	YesNo		true		
XCOORD	Double	8	X Coordinate	X-Coordinate of the asset (FL State Plane-East)		0	true		
YCOORD	Double	8	Y Coordinate	Y-Coordinate of the asset (FL State Plane-East)		0	true		
ZCOORD	Double	8	Z Coordinate	Z-Coordinate of the asset		0	true		
ANCILLARYROLE	SmallInteger	2	Ancillary Role	Identifies whether the asset participates in a geometric network as either a source or a sink	AncillaryRoleDomain	0	true		
ROTATION	Double	8	Rotation	Map symbol rotation value		0	true		
ENABLED	SmallInteger	2	Enabled Flag	Indicates if the asset is enabled within a geometric network.	EnabledDomain	1	true		
FIELDNOTES	String	255	Field Notes	Comments or notes from field staff, including surveyors, that are relevant to the asset			true		
NOTES	String	200	GIS Notes	GIS entry notes or comments relevant to the asset			true		
created_user	String	255	created_user	created_user			true		
created_date	Date	8	created_date	created_date			true		
last_edited_user	String	255	last_edited_user	last_edited_user			true		
last_edited_date	Date	8	last_edited_date	last_edited_date			true		

---

ssEmergencyOverflow - FeatureClass

Name	ssEmergencyOverflow
ShapeType	Point
FeatureType	Simple
AliasName	ss Emergency Overflows
HasM	false

HasZ false
HasAttachments false
Description Sanitary sewer emergency overflow locations.

Field	DataType	Length	AliasName	Description	Domain	DefaultValue	IsNullable	Precision	Scale
FACILITYNUM	Integer	4	Facility Number	Locally asssigned numeric unique identifier populated by database admin created database trigger		0	true		
FACILITYID	String	20	Facility Identifier	Locally asssigned alpha-numeric unique identifier populated by database admin created database trigger			true		
LEGACYID	String	20	Legacy ID (Unit ID)	Former asset identifier. To be moved to a related table.			true		
ACTIVESTATUS	String	20	Active Status	Identifies whether the asset is in use, not in use or removed from the ground	piActiveStatus	Active	true		
ACTIVEFLAG	SmallInteger	2	Active Flag	Identifies whether the feature is in use/active	BooleanDomain	1	true		
INVCLASS	String	20	Inventory Class	The method used to establish the geographic location of the asset	InventoryClass		true		
COLLECTEDDATE	Date	8	GPS Collected Date	Date the feature was located by a surveyor			true		
OWNEDBY	SmallInteger	2	Owned By	Indicates which organization owns the asset	AssetOwner	1	true		
MAINTBY	SmallInteger	2	Maintained By	Indicates which organization maintains the asset	AssetManager	1	true		
INSTALLDATE	Date	8	Install Date	The date the asset was installed			true		
LOCATION	String	200	Location Description	Identifies the meter box location (area_served in Utility Billing database). Value is copied to Cityworks work order Location Details field when attached to a work order.			true		

ADDRESS	String	50	Address	The address or closest address to the asset. Value is copied to Cityworks work order Address field when attached to a work order (address in Utility Billing database)			true		
PURCHASEDATE	Date	8	Purchase Date	The purchase date of the asset. Used for future asset management analysis.			true		
WARRANTYDATE	Date	8	Warranty Date	The date the warranty expires on the asset. If populated and asset is still under warranty, asset record will show up pink on the Cityworks work order.			true		
ASSETCOST	Double	8	Asset Cost	The replacement cost of the asset. If populated, this will be used for asset management analysis and repair/replace decisions.		0	true		
CONDITION	SmallInteger	2	Condition Rating	The condition rating of the asset. Used by Cityworks Analytics for condition analysis output. May be calculated within a Cityworks Inspection and updated from there to GIS.	piConditionPACP		true		
CONDITIONDATE	Date	8	Condition Date	The date of the last condition assessment. Can be updated from Cityworks Inspection to the GIS.			true		
SERVICELIFE	SmallInteger	2	Service Life	The expected number of years an asset is physically capable of continuing to operate. Used to anticipate retirement of assets and project funding needs.		0	true		

RUL	SmallInteger	2	Remaining Useful Life	The Remaining Useful Life of an asset calculated by subtracting the number of years since installation, from the sevice life. It will be heavily relied upon for asset management analysis.		0	true		
COF	SmallInteger	2	Consequence of Failure	The consequence of failure. Used in the BRE model as the impact due to asset failure.		0	true		
POF	SmallInteger	2	Probability of Failure	Probability of Failure. Used in the BRE model to estimate the likelihood the predicted asset (or service) failure will occur and is adjusted for backup and redundancy of the asset.		0	true		
BRE	SmallInteger	2	Business Risk Exposure	Business Risk Exposure is a the product of probablity of failure (POF) and consequence of failure (COF). Values range from 1 (low risk) to 100 (high risk) and is used to prioritize investments.		0	true		
LASTINSPECTDATE	Date	8	Last Inspection Date	The date the asset was most recently inspected			true		
LASTMAINTDATE	Date	8	Last Maintenance Date	The date of the most recent maintenance activity			true		
MANUFACTURER	String	50	Manufacturer	The manufacturer or brand of the asset (company_cd in Utility Billing database)			true		
PROJECTNUM	String	32	City Project Number	The City's Project Number under which the asset was installed			true		
FILENUM	String	32	City File Number	The City's File Number			true		

WORKORDERNUM	String	60	City Work Order Number	The work order number for performing work on the asset (Cityworks, Qalert, etc)			true		
SURVEYRPTNUM	String	32	Survey Report Number	The City's Surveyor's Report Number under which the location of an asset or group of assets are captured, may be the same as the Service Request or Work Order Number			true		
DIAMETER	Double	8	Diameter	Identified the size of meter (meter_sz in Utility Billing database)	piPipeDiameter		true		
DISCHRGTYP	String	50	Discharge Type	The type of stormwater discharge	piDischargePointType		true		
AVGDISCH	String	10	Average Discharge	Average Discharge			true		
DISCHID	String	20	Discharge Identifier	Discharge Identifier			true		
PEAKDISCH	String	10	Peak Discharge	Peak Discharge			true		
PERMIT	String	30	Permitted	A flag used to indicate whether the discharge point is permitted	YesNo		true		
PERMITID	String	20	Permit Identifier	Unique permit identifier			true		
XYCONVERTED	String	5	X, Y Converted	X, Y Converted	YesNo		true		
XCOORD	Double	8	X Coordinate	X-Coordinate of the asset (FL State Plane-East)		0	true		
YCOORD	Double	8	Y Coordinate	Y-Coordinate of the asset (FL State Plane-East)		0	true		
ZCOORD	Double	8	Z Coordinate	Z-Coordinate of the asset		0	true		
ANCILLARYROLE	SmallInteger	2	Ancillary Role	Identifies whether the asset participates in a geometric network as either a source or a sink	AncillaryRoleDomain	0	true		
ROTATION	Double	8	Rotation	Map symbol rotation value		0	true		
ENABLED	SmallInteger	2	Enabled Flag	Indicates if the asset is enabled within a geometric network.	EnabledDomain	1	true		
FIELDNOTES	String	255	Field Notes	Comments or notes from field staff, including			true		

				surveyors, that are relevant to the asset					
NOTES	String	200	GIS Notes	GIS entry notes or comments relevant to the asset			true		
created_user	String	255	created_user	created_user			true		
created_date	Date	8	created_date	created_date			true		
last_edited_user	String	255	last_edited_user	last_edited_user			true		
last_edited_date	Date	8	last_edited_date	last_edited_date			true		

ssFitting - FeatureClass

Name ssFitting
ShapeType Point
FeatureType Simple
AliasName ss Fittings
HasM false
HasZ false
HasAttachments false
Description Sanitary sewer network features that connect segments of pipe.

Field	DataType	Length	AliasName	Description	Domain	DefaultValue	IsNullable	Precision	Scale
FACILITYNUM	Integer	4	Facility Number	Locally asssigned numeric unique identifier populated by database admin created database trigger		0	true		
FACILITYID	String	20	Facility Identifier	Locally asssigned alpha-numeric unique identifier populated by database admin created database trigger			true		
LEGACYID	String	20	Legacy ID (Unit ID)	Former asset identifier. To be moved to a related table.			true		
FITTINGTYPE	String	50	Fitting Type	The type of fitting	piFittingType		true		
ACTIVESTATUS	String	20	Active Status	Identifies whether the asset is in use, not in use or removed from the ground	piActiveStatus	Active	true		
ACTIVEFLAG	SmallInteger	2	Active Flag	Identifies whether the feature is in use/active	BooleanDomain	1	true		
INVCLASS	String	20	Inventory Class	The method used to establish the geographic location of the asset	InventoryClass		true		
COLLECTEDDATE	Date	8	GPS Collected Date	Date the feature was located by a surveyor			true		

OWNEDBY	SmallInteger	2	Owned By	Indicates which organization owns the asset	AssetOwner	1	true		
MAINTBY	SmallInteger	2	Maintained By	Indicates which organization maintains the asset	AssetManager	1	true		
INSTALLDATE	Date	8	Install Date	The date the asset was installed			true		
LOCATION	String	200	Location Description	Identifies the meter box location (area_served in Utility Billing database). Value is copied to Cityworks work order Location Details field when attached to a work order.			true		
ADDRESS	String	50	Address	The address or closest address to the asset. Value is copied to Cityworks work order Address field when attached to a work order (address in Utility Billing database)			true		
PURCHASEDATE	Date	8	Purchase Date	The purchase date of the asset. Used for future asset management analysis.			true		
WARRANTYDATE	Date	8	Warranty Date	The date the warranty expires on the asset. If populated and asset is still under warranty, asset record will show up pink on the Cityworks work order.			true		
ASSETCOST	Double	8	Asset Cost	The replacement cost of the asset. If populated, this will be used for asset management analysis and repair/replace decisions.		0	true		
CONDITION	SmallInteger	2	Condition Rating	The condition rating of the asset. Used by Cityworks Analytics for condition analysis output. May be calculated within a Cityworks	piConditionPACP		true		

				Inspection and updated from there to GIS.					
CONDITIONDATE	Date	8	Condition Date	The date of the last condition assessment. Can be updated from Cityworks Inspection to the GIS.			true		
SERVICELIFE	SmallInteger	2	Service Life	The expected number of years an asset is physically capable of continuing to operate. Used to anticipate retirement of assets and project funding needs.		0	true		
RUL	SmallInteger	2	Remaining Useful Life	The Remaining Useful Life of an asset calculated by subtracting the number of years since installation, from the sevice life. It will be heavily relied upon for asset management analysis.		0	true		
COF	SmallInteger	2	Consequence of Failure	The consequence of failure. Used in the BRE model as the impact due to asset failure.		0	true		
POF	SmallInteger	2	Probability of Failure	Probability of Failure. Used in the BRE model to estimate the likelihood the predicted asset (or service) failure will occur and is adjusted for backup and redundancy of the asset.		0	true		
BRE	SmallInteger	2	Business Risk Exposure	Business Risk Exposure is a the product of probablity of failure (POF) and consequence of failure (COF). Values range from 1 (low risk) to 100 (high risk) and is used to prioritize investments.		0	true		
LASTINSPECTDATE	Date	8	Last Inspection Date	The date the asset was most recently			true		

				inspected					
LASTMAINTDATE	Date	8	Last Maintenance Date	The date of the most recent maintenance activity			true		
MANUFACTURER	String	50	Manufacturer	The manufacturer or brand of the asset (company_cd in Utility Billing database)			true		
PROJECTNUM	String	32	City Project Number	The City's Project Number under which the asset was installed			true		
FILENUM	String	32	City File Number	The City's File Number			true		
WORKORDERNUM	String	60	City Work Order Number	The work order number for performing work on the asset (Cityworks, Qalert, etc)			true		
SURVEYRPTNUM	String	32	Survey Report Number	The City's Surveyor's Report Number under which the location of an asset or group of assets are captured, may be the same as the Service Request or Work Order Number			true		
XYCONVERTED	String	5	X, Y Converted	X, Y Converted	YesNo		true		
XCOORD	Double	8	X Coordinate	X-Coordinate of the asset (FL State Plane-East)		0	true		
YCOORD	Double	8	Y Coordinate	Y-Coordinate of the asset (FL State Plane-East)		0	true		
ZCOORD	Double	8	Z Coordinate	Z-Coordinate of the asset		0	true		
ANCILLARYROLE	SmallInteger	2	Ancillary Role	Identifies whether the asset participates in a geometric network as either a source or a sink	AncillaryRoleDomain	0	true		
ROTATION	Double	8	Rotation	Map symbol rotation value		0	true		
ENABLED	SmallInteger	2	Enabled Flag	Indicates if the asset is enabled within a geometric network.	EnabledDomain	1	true		
SIZENOTES	String	10	Size Notes	Size Notes			true		
FIELDNOTES	String	255	Field Notes	Comments or notes from field staff, including surveyors, that			true		

				are relevant to the asset					
NOTES	String	200	GIS Notes	GIS entry notes or comments relevant to the asset			true		
created_user	String	255	created_user	created_user			true		
created_date	Date	8	created_date	created_date			true		
last_edited_user	String	255	last_edited_user	last_edited_user			true		
last_edited_date	Date	8	last_edited_date	last_edited_date			true		

---

ssGravityMain - FeatureClass

Name ssGravityMain
ShapeType Polyline
FeatureType Simple
AliasName ss Gravity Mains
HasM false
HasZ false
HasAttachments false
Description Sanitary gravity sewer conveyance pipes.

Field	DataType	Length	AliasName	Description	Domain	DefaultValue	IsNullable	Precision	Scale
FACILITYNUM	Integer	4	Facility Number	Locally asssigned numeric unique identifier populated by database admin created database trigger		0	true		
FACILITYID	String	20	Facility Identifier	Locally asssigned alpha-numeric unique identifier populated by database admin created database trigger			true		
LEGACYID	String	20	Legacy ID (Unit ID)	Former asset identifier. To be moved to a related table.			true		
FROMMH	String	20	From Manhole	The unique idendentifier of the From Manhole (upstream manhole)			true		
TOMH	String	20	To Manhole	The unique idendentifier of the To Manhole (downstream manhole)			true		
ACTIVESTATUS	String	20	Active Status	Identifies whether the asset is in use, not in use or removed from the ground	piActiveStatus	Active	true		
ACTIVEFLAG	SmallInteger	2	Active Flag	Identifies whether the feature is in use/active	BooleanDomain	1	true		
INVCLASS	String	20	Inventory Class	The method used to establish the geographic	InventoryClass		true		

				location of the asset					
COLLECTEDDATE	Date	8	GPS Collected Date	Date the feature was located by a surveyor			true		
OWNEDBY	SmallInteger	2	Owned By	Indicates which organization owns the asset	AssetOwner	1	true		
MAINTBY	SmallInteger	2	Maintained By	Indicates which organization maintains the asset	AssetManager	1	true		
INSTALLDATE	Date	8	Install Date	The date the asset was installed			true		
LOCATION	String	200	Location Description	Identifies the meter box location (area_served in Utility Billing database). Value is copied to Cityworks work order Location Details field when attached to a work order.			true		
ADDRESS	String	50	Address	The address or closest address to the asset. Value is copied to Cityworks work order Address field when attached to a work order (address in Utility Billing database)			true		
PURCHASEDATE	Date	8	Purchase Date	The purchase date of the asset. Used for future asset management analysis.			true		
WARRANTYDATE	Date	8	Warranty Date	The date the warranty expires on the asset. If populated and asset is still under warranty, asset record will show up pink on the Cityworks work order.			true		
ASSETCOST	Double	8	Asset Cost	The replacement cost of the asset. If populated, this will be used for asset management analysis and repair/replace decisions.		0	true		
CONDITION	SmallInteger	2	Condition Rating	The condition rating of the asset. Used by Cityworks Analytics for condition	piConditionPACP		true		

				analysis output. May be calculated within a Cityworks Inspection and updated from there to GIS.					
CONDITIONDATE	Date	8	Condition Date	The date of the last condition assessment. Can be updated from Cityworks Inspection to the GIS.			true		
SERVICELIFE	SmallInteger	2	Service Life	The expected number of years an asset is physically capable of continuing to operate. Used to anticipate retirement of assets and project funding needs.		0	true		
RUL	SmallInteger	2	Remaining Useful Life	The Remaining Useful Life of an asset calculated by subtracting the number of years since installation, from the sevice life. It will be heavily relied upon for asset management analysis.		0	true		
COF	SmallInteger	2	Consequence of Failure	The consequence of failure. Used in the BRE model as the impact due to asset failure.		0	true		
POF	SmallInteger	2	Probability of Failure	Probability of Failure. Used in the BRE model to estimate the likelihood the predicted asset (or service) failure will occur and is adjusted for backup and redundancy of the asset.		0	true		
BRE	SmallInteger	2	Business Risk Exposure	Business Risk Exposure is a the product of probablity of failure (POF) and consequence of failure (COF). Values range from 1 (low risk) to 100 (high risk) and is used to prioritize investments.		0	true		

LASTINSPECTDATE	Date	8	Last Inspection Date	The date the asset was most recently inspected			true		
LASTMAINTDATE	Date	8	Last Maintenance Date	The date of the most recent maintenance activity			true		
MANUFACTURER	String	50	Manufacturer	The manufacturer or brand of the asset (company_cd in Utility Billing database)			true		
PROJECTNUM	String	32	City Project Number	The City's Project Number under which the asset was installed			true		
FILENUM	String	32	City File Number	The City's File Number			true		
WORKORDERNUM	String	60	City Work Order Number	The work order number for performing work on the asset (Cityworks, Qalert, etc)			true		
SURVEYRPTNUM	String	32	Survey Report Number	The City's Surveyor's Report Number under which the location of an asset or group of assets are captured, may be the same as the Service Request or Work Order Number			true		
MATERIAL	String	20	Pipe Material	Identifies the construction material of the pipe connection	piPipeMaterial		true		
MAINSHAPE	String	50	Main Shape	The shape of the main	piPipeShape		true		
DIAMETER	Double	8	Diameter	Identified the size of meter (meter_sz in Utility Billing database)	piPipeDiameter		true		
UPELEV	Double	8	Upstream Elevation	The upstream invert elevation of the pipe		0	true		
DOWNELEV	Double	8	Downstream Elevation	The downstream invert elevation of the pipe		0	true		
SLOPE	Double	8	Slope	The slope of the pipe.		0	true		
WATERTYPE	String	30	Water Type	Identifies the type of water in the pipe	ssWaterType		true		
SUMFLOW	Double	8	Flow Summary	The sum of flow		0	true		
LINED	String	3	Lined	Indicates if the manhole is lined	YesNo		true		
LINEDYEAR	String	4	Year Lined	The year the pipe was last lined			true		

LINERTYPE	String	20	Liner Type	The method used to line the pipe	piLiningMethod		true		
ENABLED	SmallInteger	2	Enabled Flag	Indicates if the asset is enabled within a geometric network.	EnabledDomain	1	true		
FIELDNOTES	String	255	Field Notes	Comments or notes from field staff, including surveyors, that are relevant to the asset			true		
NOTES	String	200	GIS Notes	GIS entry notes or comments relevant to the asset			true		
created_user	String	255	created_user	created_user			true		
created_date	Date	8	created_date	created_date			true		
last_edited_user	String	255	last_edited_user	last_edited_user			true		
last_edited_date	Date	8	last_edited_date	last_edited_date			true		

---

ssLateralLine - FeatureClass

Name ssLateralLine
ShapeType Polyline
FeatureType Simple
AliasName ss Lateral Lines
HasM false
HasZ false
HasAttachments false
Description Sanitary sewer lateral pipes.

Field	DataType	Length	AliasName	Description	Domain	DefaultValue	IsNullable	Precision	Scale
FACILITYNUM	Integer	4	Facility Number	Locally asssigned numeric unique identifier populated by database admin created database trigger		0	true		
FACILITYID	String	20	Facility Identifier	Locally asssigned alpha-numeric unique identifier populated by database admin created database trigger			true		
LEGACYID	String	20	Legacy ID (Unit ID)	Former asset identifier. To be moved to a related table.			true		
ACTIVESTATUS	String	20	Active Status	Identifies whether the asset is in use, not in use or removed from the ground	piActiveStatus	Active	true		
ACTIVEFLAG	SmallInteger	2	Active Flag	Identifies whether the feature is in use/active	BooleanDomain	1	true		

INVCLASS	String	20	Inventory Class	The method used to establish the geographic location of the asset	InventoryClass		true		
COLLECTEDDATE	Date	8	GPS Collected Date	Date the feature was located by a surveyor			true		
OWNEDBY	SmallInteger	2	Owned By	Indicates which organization owns the asset	AssetOwner	1	true		
MAINTBY	SmallInteger	2	Maintained By	Indicates which organization maintains the asset	AssetManager	1	true		
INSTALLDATE	Date	8	Install Date	The date the asset was installed			true		
MATERIAL	String	20	Pipe Material	Identifies the construction material of the pipe connection	piPipeMaterial		true		
LINEDYEAR	String	4	Year Lined	The year the pipe was last lined			true		
LINERTYPE	String	30	Liner Type	The method used to line the pipe	piLiningMethod		true		
DIAMETER	Double	8	Diameter	Identified the size of meter (meter_sz in Utility Billing database)	piPipeDiameter	0	true		
DISTANCE	Integer	4	Distance	Distance		0	true		
WATERTYPE	String	30	Water Type	Identifies the type of water in the pipe	ssWaterType		true		
LOCATION	String	200	Location Description	Identifies the meter box location (area_served in Utility Billing database). Value is copied to Cityworks work order Location Details field when attached to a work order.			true		
ADDRESS	String	50	Address	The address or closest address to the asset. Value is copied to Cityworks work order Address field when attached to a work order (address in Utility Billing database)			true		
PURCHASEDATE	Date	8	Purchase Date	The purchase date of the asset. Used for future asset management analysis.			true		

WARRANTYDATE	Date	8	Warranty Date	The date the warranty expires on the asset. If populated and asset is still under warranty, asset record will show up pink on the Cityworks work order.			true		
ASSETCOST	Double	8	Asset Cost	The replacement cost of the asset. If populated, this will be used for asset management analysis and repair/replace decisions.		0	true		
CONDITION	SmallInteger	2	Condition Rating	The condition rating of the asset. Used by Cityworks Analytics for condition analysis output. May be calculated within a Cityworks Inspection and updated from there to GIS.	piConditionPACP		true		
CONDITIONDATE	Date	8	Condition Date	The date of the last condition assessment. Can be updated from Cityworks Inspection to the GIS.			true		
SERVICELIFE	SmallInteger	2	Service Life	The expected number of years an asset is physically capable of continuing to operate. Used to anticipate retirement of assets and project funding needs.		0	true		
RUL	SmallInteger	2	Remaining Useful Life	The Remaining Useful Life of an asset calculated by subtracting the number of years since installation, from the sevice life. It will be heavily relied upon for asset management analysis.		0	true		
COF	SmallInteger	2	Consequence of Failure	The consequence of failure. Used in the BRE model as the impact due to asset failure.		0	true		

POF	SmallInteger	2	Probability of Failure	Probability of Failure. Used in the BRE model to estimate the likelihood the predicted asset (or service) failure will occur and is adjusted for backup and redundancy of the asset.		0	true		
BRE	SmallInteger	2	Business Risk Exposure	Business Risk Exposure is a the product of probablity of failure (POF) and consequence of failure (COF). Values range from 1 (low risk) to 100 (high risk) and is used to prioritize investments.		0	true		
LASTINSPECTDATE	Date	8	Last Inspection Date	The date the asset was most recently inspected			true		
LASTMAINTDATE	Date	8	Last Maintenance Date	The date of the most recent maintenance activity			true		
MANUFACTURER	String	50	Manufacturer	The manufacturer or brand of the asset (company_cd in Utility Billing database)			true		
PROJECTNUM	String	32	City Project Number	The City's Project Number under which the asset was installed			true		
FILENUM	String	32	City File Number	The City's File Number			true		
WORKORDERNUM	String	60	City Work Order Number	The work order number for performing work on the asset (Cityworks, Qalert, etc)			true		
SURVEYRPTNUM	String	32	Survey Report Number	The City's Surveyor's Report Number under which the location of an asset or group of assets are captured, may be the same as the Service Request or Work Order Number			true		
ENABLED	SmallInteger	2	Enabled Flag	Indicates if the asset is enabled within a geometric network.	EnabledDomain	1	true		

FIELDNOTES	String	255	Field Notes	Comments or notes from field staff, including surveyors, that are relevant to the asset			true		
NOTES	String	200	GIS Notes	GIS entry notes or comments relevant to the asset			true		
created_user	String	255	created_user	created_user			true		
created_date	Date	8	created_date	created_date			true		
last_edited_user	String	255	last_edited_user	last_edited_user			true		
last_edited_date	Date	8	last_edited_date	last_edited_date			true		

---

ssManhole - FeatureClass

Name ssManhole
ShapeType Point
FeatureType Simple
AliasName ss Manholes
HasM false
HasZ false
HasAttachments false
Description Manhole features may connect two or more pipes and control the flow of water in the network through pipe elevations.

Field	DataType	Length	AliasName	Description	Domain	DefaultValue	IsNullable	Precision	Scale
FACILITYNUM	Integer	4	Facility Number	Locally asssigned numeric unique identifier populated by database admin created database trigger		0	true		
FACILITYID	String	20	Facility Identifier	Locally asssigned alpha-numeric unique identifier populated by database admin created database trigger			true		
LEGACYID	String	20	Legacy ID (Unit ID)	Former asset identifier. To be moved to a related table.			true		
INVCLASS	String	20	Inventory Class	The method used to establish the geographic location of the asset	InventoryClass		true		
MHTYPE	String	15	Manhole Type	The type of manhole	piManholeType		true		
ACTIVESTATUS	String	20	Active Status	Identifies whether the asset is in use, not in use or removed from the ground	piActiveStatus	Active	true		
ACTIVEFLAG	SmallInteger	2	Active Flag	Identifies whether the feature is in use/active	BooleanDomain	1	true		

COLLECTEDDATE	Date	8	GPS Collected Date	Date the feature was located by a surveyor			true		
OWNEDBY	SmallInteger	2	Owned By	Indicates which organization owns the asset	AssetOwner	1	true		
MAINTBY	SmallInteger	2	Maintained By	Indicates which organization maintains the asset	AssetManager	1	true		
INSTALLDATE	Date	8	Install Date	The date the asset was installed			true		
LOCATION	String	200	Location Description	Identifies the meter box location (area_served in Utility Billing database). Value is copied to Cityworks work order Location Details field when attached to a work order.			true		
ADDRESS	String	50	Address	The address or closest address to the asset. Value is copied to Cityworks work order Address field when attached to a work order (address in Utility Billing database)			true		
PURCHASEDATE	Date	8	Purchase Date	The purchase date of the asset. Used for future asset management analysis.			true		
WARRANTYDATE	Date	8	Warranty Date	The date the warranty expires on the asset. If populated and asset is still under warranty, asset record will show up pink on the Cityworks work order.			true		
ASSETCOST	Double	8	Asset Cost	The replacement cost of the asset. If populated, this will be used for asset management analysis and repair/replace decisions.		0	true		
CONDITION	SmallInteger	2	Condition Rating	The condition rating of the asset. Used by Cityworks Analytics for condition analysis output.	piConditionPACP		true		

				May be calculated within a Cityworks Inspection and updated from there to GIS.					
CONDITIONDATE	Date	8	Condition Date	The date of the last condition assessment. Can be updated from Cityworks Inspection to the GIS.			true		
SERVICELIFE	SmallInteger	2	Service Life	The expected number of years an asset is physically capable of continuing to operate. Used to anticipate retirement of assets and project funding needs.		0	true		
RUL	SmallInteger	2	Remaining Useful Life	The Remaining Useful Life of an asset calculated by subtracting the number of years since installation, from the sevice life. It will be heavily relied upon for asset management analysis.		0	true		
COF	SmallInteger	2	Consequence of Failure	The consequence of failure. Used in the BRE model as the impact due to asset failure.		0	true		
POF	SmallInteger	2	Probability of Failure	Probability of Failure. Used in the BRE model to estimate the likelihood the predicted asset (or service) failure will occur and is adjusted for backup and redundancy of the asset.		0	true		
BRE	SmallInteger	2	Business Risk Exposure	Business Risk Exposure is a the product of probablity of failure (POF) and consequence of failure (COF). Values range from 1 (low risk) to 100 (high risk) and is used to prioritize investments.		0	true		

LASTINSPECTDATE	Date	8	Last Inspection Date	The date the asset was most recently inspected			true		
LASTMAINTDATE	Date	8	Last Maintenance Date	The date of the most recent maintenance activity			true		
MANUFACTURER	String	50	Manufacturer	The manufacturer or brand of the asset (company_cd in Utility Billing database)			true		
PROJECTNUM	String	32	City Project Number	The City's Project Number under which the asset was installed			true		
FILENUM	String	32	City File Number	The City's File Number			true		
WORKORDERNUM	String	60	City Work Order Number	The work order number for performing work on the asset (Cityworks, Qalert, etc)			true		
SURVEYRPTNUM	String	32	Survey Report Number	The City's Surveyor's Report Number under which the location of an asset or group of assets are captured, may be the same as the Service Request or Work Order Number			true		
CVTYPE	String	20	Cover Type	The type of stormwater manhole cover	piManholeCoverType		true		
WALLMAT	String	25	Wall Material	The material used to construct the manhole wall	piPipeMaterial		true		
CUTDEPTH	Double	8	Pavement Cut Depth	Pavement cut depth		0	true		
LINED	String	3	Lined	Indicates if the manhole is lined	YesNo		true		
WATERTYPE	String	30	Water Type	Identifies the type of water in the pipe	ssWaterType		true		
SUMFLOW	Double	8	Flow Summary	The sum of flow		0	true		
FLOWDIR	String	25	Flow Direction	Defines the direction of flow using geometric flow direction values	Direction		true		
RIMELEV	Double	8	Rim Elevation	The elevation of the inlet rim		0	true		
HIGHELEV	Double	8	High Pipe Elevation	High pipe elevation inside manhole		0	true		
INVERT	Double	8	Invert	Invert		0	true		
INVERTELEV	Double	8	Invert Elevation	The invert elevation		0	true		

INVERT1ELEV	Double	8	Invert1 Elevation	The invert elevation		0	true		
INVERT1DIR	String	50	Invert 1 Direction	Invert 1 Direction	Direction		true		
INVERT1SIZE	Double	8	Invert 1 Size	Invert 1 Size	piPipeDiameter		true		
INVERT1MAT	String	50	Invert1 Pipe Material	The construction material of the invert pipe	piPipeMaterial		true		
INVERT2ELEV	Double	8	Invert2 Elevation	The invert elevation		0	true		
INVERT2DIR	String	50	Invert 2 Direction	Invert 2 Direction	Direction		true		
INVERT2SIZE	Double	8	Invert 2 Size	Invert 2 Size	piPipeDiameter		true		
INVERT2MAT	String	50	Invert2 Pipe Material	The construction material of the invert pipe	piPipeMaterial		true		
INVERT3ELEV	Double	8	Invert 3 Elevation	The invert elevation		0	true		
INVERT3DIR	String	50	Invert 3 Direction	Invert 3 Direction	Direction		true		
INVERT3SIZE	Double	8	Invert 3 Size	Invert 3 Size	piPipeDiameter		true		
INVERT3MAT	String	50	Invert 3 Pipe Material	The construction material of the invert pipe	piPipeMaterial		true		
INVERT4ELEV	Double	8	Invert 4 Elevation	The invert elevation		0	true		
INVERT4DIR	String	50	Invert 4 Direction	Invert 4 Direction	Direction		true		
INVERT4SIZE	Double	8	Invert 4 Size	Invert 4 Size	piPipeDiameter		true		
INVERT4MAT	String	50	Invert 4 Pipe Material	The construction material of the invert pipe	piPipeMaterial		true		
INVERT5ELEV	Double	8	Invert 5 Elevation	The invert elevation		0	true		
INVERT5DIR	String	50	Invert 5 Direction	Invert 5 Direction	Direction		true		
INVERT5SIZE	Double	8	Invert 5 Size	Invert 5 Size	piPipeDiameter		true		
INVERT5MAT	String	50	Invert 5 Pipe Material	The construction material of the invert pipe	piPipeMaterial		true		
INVERT6ELEV	Double	8	Invert 6 Elevation	The invert elevation		0	true		
INVERT6DIR	String	50	Invert 6 Direction	Invert 6 Direction	Direction		true		
INVERT6SIZE	Double	8	Invert 6 Size	Invert 6 Size	piPipeDiameter		true		
INVERT6MAT	String	50	Invert 6 Pipe Material	The construction material of the invert pipe	piPipeMaterial		true		
XYCONVERTED	String	5	X, Y Converted	XYCONVERTED	YesNo		true		
XCOORD	Double	8	X Coordinate	XCOORD			true		
YCOORD	Double	8	Y Coordinate	YCOORD			true		
ZCOORD	Double	8	Z Coordinate	ZCOORD			true		
ANCILLARYROLE	SmallInteger	2	Ancillary Role	ANCILLARYROLE	AncillaryRoleDomain		true		
ENABLED	SmallInteger	2	Enabled	ENABLED	EnabledDomain	1	true		
FIELDNOTES	String	255	Field Notes	FIELDNOTES			true		
NOTES	String	200	GIS Notes	NOTES			true		
created_user	String	255	created_user	created_user			true		
created_date	Date	8	created_date	created_date			true		
last_edited_user	String	255	last_edited_user	last_edited_user			true		
last_edited_date	Date	8	last_edited_date	last_edited_date			true		

ssNetworkStructure - FeatureClass

Name ssNetworkStructure
ShapeType Point
FeatureType Simple
AliasName ss Network Structures
HasM false
HasZ false
HasAttachments false
Description Sanitary sewer network structures such as pump stations or pipe ends.

Field	DataType	Length	AliasName	Description	Domain	DefaultValue	IsNullable	Precision	Scale
FACILITYNUM	Integer	4	Facility Number	Locally asssigned numeric unique identifier populated by database admin created database trigger		0	true		
FACILITYID	String	20	Facility Identifier	Locally asssigned alpha-numeric unique identifier populated by database admin created database trigger			true		
LEGACYID	String	20	Legacy ID (Unit ID)	Former asset identifier. To be moved to a related table.			true		
STRUCTTYPE	String	30	Structure Type	The teyp of water structure	ssNetworkStructureType		true		
NAME	String	100	Name	The name of the facility or location the pump is housed in			true		
ACTIVESTATUS	String	20	Active Status	Identifies whether the asset is in use, not in use or removed from the ground	piActiveStatus	Active	true		
ACTIVEFLAG	SmallInteger	2	Active Flag	Identifies whether the feature is in use/active	BooleanDomain	1	true		
INVCLASS	String	20	Inventory Class	The method used to establish the geographic location of the asset	InventoryClass		true		
COLLECTEDDATE	Date	8	GPS Collected Date	Date the feature was located by a surveyor			true		
OWNEDBY	SmallInteger	2	Owned By	Indicates which organization owns the asset	AssetOwner	1	true		
MAINTBY	SmallInteger	2	Maintained By	Indicates which organization maintains the asset	AssetManager	1	true		
INSTALLDATE	Date	8	Install Date	The date the asset was installed			true		

LOCATION	String	200	Location Description	Identifies the meter box location (area_served in Utility Billing database). Value is copied to Cityworks work order Location Details field when attached to a work order.			true		
ADDRESS	String	50	Address	The address or closest address to the asset. Value is copied to Cityworks work order Address field when attached to a work order (address in Utility Billing database)			true		
PURCHASEDATE	Date	8	Purchase Date	The purchase date of the asset. Used for future asset management analysis.			true		
WARRANTYDATE	Date	8	Warranty Date	The date the warranty expires on the asset. If populated and asset is still under warranty, asset record will show up pink on the Cityworks work order.			true		
ASSETCOST	Double	8	Asset Cost	The replacement cost of the asset. If populated, this will be used for asset management analysis and repair/replace decisions.		0	true		
CONDITION	SmallInteger	2	Condition Rating	The condition rating of the asset. Used by Cityworks Analytics for condition analysis output. May be calculated within a Cityworks Inspection and updated from there to GIS.	piConditionPACP		true		
CONDITIONDATE	Date	8	Condition Date	The date of the last condition assessment. Can be updated			true		

				from Cityworks Inspection to the GIS.					
SERVICELIFE	SmallInteger	2	Service Life	The expected number of years an asset is physically capable of continuing to operate. Used to anticipate retirement of assets and project funding needs.		0	true		
RUL	SmallInteger	2	Remaining Useful Life	The Remaining Useful Life of an asset calculated by subtracting the number of years since installation, from the sevice life. It will be heavily relied upon for asset management analysis.		0	true		
COF	SmallInteger	2	Consequence of Failure	The consequence of failure. Used in the BRE model as the impact due to asset failure.		0	true		
POF	SmallInteger	2	Probability of Failure	Probability of Failure. Used in the BRE model to estimate the likelihood the predicted asset (or service) failure will occur and is adjusted for backup and redundancy of the asset.		0	true		
BRE	SmallInteger	2	Business Risk Exposure	Business Risk Exposure is a the product of probablity of failure (POF) and consequence of failure (COF). Values range from 1 (low risk) to 100 (high risk) and is used to prioritize investments.		0	true		
LASTINSPECTDATE	Date	8	Last Inspection Date	The date the asset was most recently inspected			true		
LASTMAINTDATE	Date	8	Last Maintenance Date	The date of the most recent maintenance activity			true		

MANUFACTURER	String	50	Manufacturer	The manufacturer or brand of the asset (company_cd in Utility Billing database)			true		
PROJECTNUM	String	32	City Project Number	The City's Project Number under which the asset was installed			true		
FILENUM	String	32	City File Number	The City's File Number			true		
WORKORDERNUM	String	60	City Work Order Number	The work order number for performing work on the asset (Cityworks, Qalert, etc)			true		
SURVEYRPTNUM	String	32	Survey Report Number	The City's Surveyor's Report Number under which the location of an asset or group of assets are captured, may be the same as the Service Request or Work Order Number			true		
XYCONVERTED	String	5	X, Y Converted	X, Y Converted	YesNo		true		
XCOORD	Double	8	X Coordinate	X-Coordinate of the asset (FL State Plane-East)		0	true		
YCOORD	Double	8	Y Coordinate	Y-Coordinate of the asset (FL State Plane-East)		0	true		
ZCOORD	Double	8	Z Coordinate	Z-Coordinate of the asset		0	true		
OPDATE	Date	8	Operational Date	Date when the facility was put into service			true		
DIAMETER	Double	8	Diameter	Identified the size of meter (meter_sz in Utility Billing database)	piPipeDiameter		true		
ANCILLARYROLE	SmallInteger	2	Ancillary Role	Identifies whether the asset participates in a geometric network as either a source or a sink	AncillaryRoleDomain	0	true		
ROTATION	Double	8	Rotation	Map symbol rotation value		0	true		
ENABLED	SmallInteger	2	Enabled Flag	Indicates if the asset is enabled within a geometric network.	EnabledDomain	1	true		

FIELDNOTES	String	255	Field Notes	Comments or notes from field staff, including surveyors, that are relevant to the asset			true		
NOTES	String	200	GIS Notes	GIS entry notes or comments relevant to the asset			true		
created_user	String	255	created_user	created_user			true		
created_date	Date	8	created_date	created_date			true		
last_edited_user	String	255	last_edited_user	last_edited_user			true		
last_edited_date	Date	8	last_edited_date	last_edited_date			true		

---

ssPressurizedMain - FeatureClass

Name ssPressurizedMain
ShapeType Polyline
FeatureType Simple
AliasName ss Pressurized Mains
HasM false
HasZ false
HasAttachments false
Description Pressurized sanitary sewer mains.

Field	DataType	Length	AliasName	Description	Domain	DefaultValue	IsNullable	Precision	Scale
FACILITYNUM	Integer	4	Facility Number	Locally asssigned numeric unique identifier populated by database admin created database trigger		0	true		
FACILITYID	String	20	Facility Identifier	Locally asssigned alpha-numeric unique identifier populated by database admin created database trigger			true		
LEGACYID	String	20	Legacy ID (Unit ID)	Former asset identifier. To be moved to a related table.			true		
ACTIVESTATUS	String	20	Active Status	Identifies whether the asset is in use, not in use or removed from the ground	piActiveStatus	Active	true		
ACTIVEFLAG	SmallInteger	2	Active Flag	Identifies whether the feature is in use/active	BooleanDomain	1	true		
INVCLASS	String	20	Inventory Class	The method used to establish the geographic location of the asset	InventoryClass		true		
COLLECTEDDATE	Date	8	GPS Collected Date	Date the feature was located by a surveyor			true		

OWNEDBY	SmallInteger	2	Owned By	Indicates which organization owns the asset	AssetOwner	1	true		
MAINTBY	SmallInteger	2	Maintained By	Indicates which organization maintains the asset	AssetManager	1	true		
INSTALLDATE	Date	8	Install Date	The date the asset was installed			true		
LOCATION	String	200	Location Description	Identifies the meter box location (area_served in Utility Billing database). Value is copied to Cityworks work order Location Details field when attached to a work order.			true		
ADDRESS	String	50	Address	The address or closest address to the asset. Value is copied to Cityworks work order Address field when attached to a work order (address in Utility Billing database)			true		
PURCHASEDATE	Date	8	Purchase Date	The purchase date of the asset. Used for future asset management analysis.			true		
WARRANTYDATE	Date	8	Warranty Date	The date the warranty expires on the asset. If populated and asset is still under warranty, asset record will show up pink on the Cityworks work order.			true		
ASSETCOST	Double	8	Asset Cost	The replacement cost of the asset. If populated, this will be used for asset management analysis and repair/replace decisions.		0	true		
CONDITION	SmallInteger	2	Condition Rating	The condition rating of the asset. Used by Cityworks Analytics for condition analysis output. May be calculated within a Cityworks Inspection and	piConditionPACP		true		

				updated from there to GIS.					
CONDITIONDATE	Date	8	Condition Date	The date of the last condition assessment. Can be updated from Cityworks Inspection to the GIS.			true		
SERVICELIFE	SmallInteger	2	Service Life	The expected number of years an asset is physically capable of continuing to operate. Used to anticipate retirement of assets and project funding needs.		0	true		
RUL	SmallInteger	2	Remaining Useful Life	The Remaining Useful Life of an asset calculated by subtracting the number of years since installation, from the sevice life. It will be heavily relied upon for asset management analysis.		0	true		
COF	SmallInteger	2	Consequence of Failure	The consequence of failure. Used in the BRE model as the impact due to asset failure.		0	true		
POF	SmallInteger	2	Probability of Failure	Probability of Failure. Used in the BRE model to estimate the likelihood the predicted asset (or service) failure will occur and is adjusted for backup and redundancy of the asset.		0	true		
BRE	SmallInteger	2	Business Risk Exposure	Business Risk Exposure is a the product of probablity of failure (POF) and consequence of failure (COF). Values range from 1 (low risk) to 100 (high risk) and is used to prioritize investments.		0	true		
LASTINSPECTDATE	Date	8	Last Inspection Date	The date the asset was most recently inspected			true		

LASTMAINTDATE	Date	8	Last Maintenance Date	The date of the most recent maintenance activity			true		
MANUFACTURER	String	50	Manufacturer	The manufacturer or brand of the asset (company_cd in Utility Billing database)			true		
PROJECTNUM	String	32	City Project Number	The City's Project Number under which the asset was installed			true		
FILENUM	String	32	City File Number	The City's File Number			true		
WORKORDERNUM	String	60	City Work Order Number	The work order number for performing work on the asset (Cityworks, Qalert, etc)			true		
SURVEYRPTNUM	String	32	Survey Report Number	The City's Surveyor's Report Number under which the location of an asset or group of assets are captured, may be the same as the Service Request or Work Order Number			true		
MATERIAL	String	20	Pipe Material	Identifies the construction material of the pipe connection	piPipeMaterial		true		
DIAMETER	Double	8	Diameter	Identified the size of meter (meter_sz in Utility Billing database)	piPipeDiameter		true		
LINED	String	3	Lined	Indicates if the manhole is lined	YesNo		true		
LINEDYEAR	String	4	Year Lined	The year the pipe was last lined			true		
LINERTYPE	String	20	Liner Type	The method used to line the pipe	piLiningMethod		true		
FROMSTRUC	String	20	From Structure	From Structure			true		
TOSTRUC	String	20	To Structure	To Structure			true		
WATERTYPE	String	30	Water Type	Identifies the type of water in the pipe	ssWaterType		true		
CASING	String	5	Casing	Identifies whether the asset is enclosed in casing	YesNo		true		
ENABLED	SmallInteger	2	Enabled Flag	Indicates if the asset is enabled within a geometric network.	EnabledDomain	1	true		

FIELDNOTES	String	255	Field Notes	Comments or notes from field staff, including surveyors, that are relevant to the asset			true		
NOTES	String	200	GIS Notes	GIS entry notes or comments relevant to the asset			true		
created_user	String	255	created_user	created_user			true		
created_date	Date	8	created_date	created_date			true		
last_edited_user	String	255	last_edited_user	last_edited_user			true		
last_edited_date	Date	8	last_edited_date	last_edited_date			true		

---

ssPumpStation - FeatureClass

Name ssPumpStation
ShapeType Point
FeatureType Simple
AliasName ss Pump Stations
HasM false
HasZ false
HasAttachments false
Description Sanitary sewer pump stations.

Field	DataType	Length	AliasName	Description	Domain	DefaultValue	IsNullable	Precision	Scale
FACILITYNUM	Integer	4	Facility Number	Locally asssigned numeric unique identifier populated by database admin created database trigger		0	true		
FACILITYID	String	20	Facility Identifier	Locally asssigned alpha-numeric unique identifier populated by database admin created database trigger			true		
LEGACYID	String	20	Legacy ID (Unit ID)	Former asset identifier. To be moved to a related table.			true		
NAME	String	100	Name	The name of the facility or location the pump is housed in			true		
ACTIVESTATUS	String	20	Active Status	Identifies whether the asset is in use, not in use or removed from the ground	piActiveStatus	Active	true		
ACTIVEFLAG	SmallInteger	2	Active Flag	Identifies whether the feature is in use/active	BooleanDomain	1	true		
INVCLASS	String	20	Inventory Class	The method used to establish the geographic location of the	InventoryClass		true		

				asset					
COLLECTEDDATE	Date	8	GPS Collected Date	Date the feature was located by a surveyor			true		
CPSETA	String	50	Control Point A	Control Point A	ControlSetRef		true		
CPSETB	String	50	Control Point B	Control Point B	ControlSetRef		true		
CPSETC	String	50	Control Point C	Control Point C	ControlSetRef		true		
CPSETD	String	50	Control Point D	Control Point D	ControlSetRef		true		
CPAYCOORD	Double	8	Control Point A Y Coord	Control Point A Y Coord		0	true		
CPAXCOORD	Double	8	Control Point A X Coord	Control Point A X Coord		0	true		
CPAZCOORD	Double	8	Control Point A Z Coord	Control Point A Z Coord		0	true		
CPBYCOORD	Double	8	Control Point B Y Coord	Control Point B Y Coord		0	true		
CPBXCOORD	Double	8	Control Point B X Coord	Control Point B X Coord		0	true		
CPBZCOORD	Double	8	Control Point B Z Coord	Control Point B Z Coord		0	true		
CPCYCOORD	Double	8	Control Point C Y Coord	Control Point C Y Coord		0	true		
CPCXCOORD	Double	8	Control Point C X Coord	Control Point C X Coord		0	true		
CPCZCOORD	Double	8	Control Point C Z Coord	Control Point C Z Coord		0	true		
CPDYCOORD	Double	8	Control Point D Y Coord	Control Point D Y Coord		0	true		
CPDXCOORD	Double	8	Control Point D X Coord	Control Point D X Coord		0	true		
CPDZCOORD	Double	8	Control Point D Z Coord	Control Point D Z Coord		0	true		
OWNEDBY	SmallInteger	2	Owned By	Indicates which organization owns the asset	AssetOwner	1	true		
MAINTBY	SmallInteger	2	Maintained By	Indicates which organization maintains the asset	AssetManager	1	true		
INSTALLDATE	Date	8	Install Date	The date the asset was installed			true		
LOCATION	String	200	Location Description	Identifies the meter box location (area_served in Utility Billing database). Value is copied to Cityworks work order Location Details field when attached to a work order.			true		
ADDRESS	String	50	Address	The address or closest address to the asset. Value is copied to Cityworks work order Address field when attached to a work order (address in Utility Billing database)			true		

PURCHASEDATE	Date	8	Purchase Date	The purchase date of the asset. Used for future asset management analysis.			true		
WARRANTYDATE	Date	8	Warranty Date	The date the warranty expires on the asset. If populated and asset is still under warranty, asset record will show up pink on the Cityworks work order.			true		
ASSETCOST	Double	8	Asset Cost	The replacement cost of the asset. If populated, this will be used for asset management analysis and repair/replace decisions.		0	true		
CONDITION	SmallInteger	2	Condition Rating	The condition rating of the asset. Used by Cityworks Analytics for condition analysis output. May be calculated within a Cityworks Inspection and updated from there to GIS.	piConditionPACP		true		
CONDITIONDATE	Date	8	Condition Date	The date of the last condition assessment. Can be updated from Cityworks Inspection to the GIS.			true		
SERVICELIFE	SmallInteger	2	Service Life	The expected number of years an asset is physically capable of continuing to operate. Used to anticipate retirement of assets and project funding needs.		0	true		
RUL	SmallInteger	2	Remaining Useful Life	The Remaining Useful Life of an asset calculated by subtracting the number of years since installation, from the sevice life. It will be heavily relied upon for asset management analysis.		0	true		

COF	SmallInteger	2	Consequence of Failure	The consequence of failure. Used in the BRE model as the impact due to asset failure.		0	true		
POF	SmallInteger	2	Probability of Failure	Probability of Failure. Used in the BRE model to estimate the likelihood the predicted asset (or service) failure will occur and is adjusted for backup and redundancy of the asset.		0	true		
BRE	SmallInteger	2	Business Risk Exposure	Business Risk Exposure is a the product of probablity of failure (POF) and consequence of failure (COF). Values range from 1 (low risk) to 100 (high risk) and is used to prioritize investments.		0	true		
LASTINSPECTDATE	Date	8	Last Inspection Date	The date the asset was most recently inspected			true		
LASTMAINTDATE	Date	8	Last Maintenance Date	The date of the most recent maintenance activity			true		
MANUFACTURER	String	50	Manufacturer	The manufacturer or brand of the asset (company_cd in Utility Billing database)			true		
PROJECTNUM	String	32	City Project Number	The City's Project Number under which the asset was installed			true		
FILENUM	String	32	City File Number	The City's File Number			true		
WORKORDERNUM	String	60	City Work Order Number	The work order number for performing work on the asset (Cityworks, Qalert, etc)			true		
SURVEYRPTNUM	String	32	Survey Report Number	The City's Surveyor's Report Number under which the location of an asset or group of assets are captured, may be the same as			true		

				the Service Request or Work Order Number					
XYCONVERTED	String	5	X, Y Converted	X, Y Converted	YesNo		true		
XCOORD	Double	8	X Coordinate	X-Coordinate of the asset (FL State Plane-East)		0	true		
YCOORD	Double	8	Y Coordinate	Y-Coordinate of the asset (FL State Plane-East)		0	true		
ZCOORD	Double	8	Z Coordinate	Z-Coordinate of the asset		0	true		
OPDATE	Date	8	Operational Date	Date when the facility was put into service			true		
PSTYPE	String	30	Pump Station Type	Pump Station Type	ssPumpStationType		true		
ANCILLARYROLE	SmallInteger	2	Ancillary Role	Identifies whether the asset participates in a geometric network as either a source or a sink	AncillaryRoleDomain	0	true		
ROTATION	Double	8	Rotation	Map symbol rotation value		0	true		
ENABLED	SmallInteger	2	Enabled Flag	Indicates if the asset is enabled within a geometric network.	EnabledDomain	1	true		
FIELDNOTES	String	255	Field Notes	Comments or notes from field staff, including surveyors, that are relevant to the asset			true		
NOTES	String	200	GIS Notes	GIS entry notes or comments relevant to the asset			true		
created_user	String	255	created_user	created_user			true		
created_date	Date	8	created_date	created_date			true		
last_edited_user	String	255	last_edited_user	last_edited_user			true		
last_edited_date	Date	8	last_edited_date	last_edited_date			true		

---

ssServiceConnection - FeatureClass

Name ssServiceConnection
ShapeType Point
FeatureType Simple
AliasName ss Service Connections
HasM false
HasZ false
HasAttachments false
Description A point of service at the end of a lateral where sanitary sewer service is connected.

Field	DataType	Length	AliasName	Description	Domain	DefaultValue	IsNullable	Precision	Scale
FACILITYNUM	Integer	4	Facility Number	Locally asssigned numeric unique identifier populated by		0	true		

				database admin created database trigger					
FACILITYID	String	20	Facility Identifier	Locally asssigned alpha-numeric unique identifier populated by database admin created database trigger			true		
LEGACYID	String	20	Legacy ID (Unit ID)	Former asset identifier. To be moved to a related table.			true		
FACILITYNAME	String	100	Facility Name	Facility Name			true		
LARGEMETER	SmallInteger	2	Large Meter Flag	Large Meter Flag	BooleanDomain	0	true		
ACTIVESTATUS	String	20	Active Status	Identifies whether the asset is in use, not in use or removed from the ground	piActiveStatus	Active	true		
ACTIVEFLAG	SmallInteger	2	Active Flag	Identifies whether the feature is in use/active	BooleanDomain	1	true		
INVCLASS	String	20	Inventory Class	The method used to establish the geographic location of the asset	InventoryClass		true		
COLLECTEDDATE	Date	8	GPS Collected Date	Date the feature was located by a surveyor			true		
OWNEDBY	SmallInteger	2	Owned By	Indicates which organization owns the asset	AssetOwner	1	true		
MAINTBY	SmallInteger	2	Maintained By	Indicates which organization maintains the asset	AssetManager	1	true		
INSTALLDATE	Date	8	Install Date	The date the asset was installed			true		
LOCATION	String	200	Location Description	Identifies the meter box location (area_served in Utility Billing database). Value is copied to Cityworks work order Location Details field when attached to a work order.			true		
ADDRESS	String	50	Address	The address or closest address to the asset. Value is copied to Cityworks work order Address field when attached to a work order (address in Utility Billing database)			true		

PURCHASEDATE	Date	8	Purchase Date	The purchase date of the asset. Used for future asset management analysis.			true		
WARRANTYDATE	Date	8	Warranty Date	The date the warranty expires on the asset. If populated and asset is still under warranty, asset record will show up pink on the Cityworks work order.			true		
ASSETCOST	Double	8	Asset Cost	The replacement cost of the asset. If populated, this will be used for asset management analysis and repair/replace decisions.		0	true		
CONDITION	SmallInteger	2	Condition Rating	The condition rating of the asset. Used by Cityworks Analytics for condition analysis output. May be calculated within a Cityworks Inspection and updated from there to GIS.	piConditionPACP		true		
CONDITIONDATE	Date	8	Condition Date	The date of the last condition assessment. Can be updated from Cityworks Inspection to the GIS.			true		
SERVICELIFE	SmallInteger	2	Service Life	The expected number of years an asset is physically capable of continuing to operate. Used to anticipate retirement of assets and project funding needs.		0	true		
RUL	SmallInteger	2	Remaining Useful Life	The Remaining Useful Life of an asset calculated by subtracting the number of years since installation, from the sevice life. It will be heavily relied upon for asset management analysis.		0	true		

COF	SmallInteger	2	Consequence of Failure	The consequence of failure. Used in the BRE model as the impact due to asset failure.		0	true		
POF	SmallInteger	2	Probability of Failure	Probability of Failure. Used in the BRE model to estimate the likelihood the predicted asset (or service) failure will occur and is adjusted for backup and redundancy of the asset.		0	true		
BRE	SmallInteger	2	Business Risk Exposure	Business Risk Exposure is a the product of probablity of failure (POF) and consequence of failure (COF). Values range from 1 (low risk) to 100 (high risk) and is used to prioritize investments.		0	true		
LASTINSPECTDATE	Date	8	Last Inspection Date	The date the asset was most recently inspected			true		
LASTMAINTDATE	Date	8	Last Maintenance Date	The date of the most recent maintenance activity			true		
MANUFACTURER	String	50	Manufacturer	The manufacturer or brand of the asset (company_cd in Utility Billing database)			true		
PROJECTNUM	String	32	City Project Number	The City's Project Number under which the asset was installed			true		
FILENUM	String	32	City File Number	The City's File Number			true		
WORKORDERNUM	String	60	City Work Order Number	The work order number for performing work on the asset (Cityworks, Qalert, etc)			true		
SURVEYRPTNUM	String	32	Survey Report Number	The City's Surveyor's Report Number under which the location of an asset or group of assets are captured, may be the same as the Service			true		

				Request or Work Order Number					
SUMFLOW	Double	8	Flow Summary	The sum of flow		0	true		
XYCONVERTED	String	5	X, Y Converted	X, Y Converted	YesNo		true		
XCOORD	Double	8	X Coordinate	X-Coordinate of the asset (FL State Plane-East)		0	true		
YCOORD	Double	8	Y Coordinate	Y-Coordinate of the asset (FL State Plane-East)		0	true		
ZCOORD	Double	8	Z Coordinate	Z-Coordinate of the asset		0	true		
ROTATION	Double	8	Rotation	Map symbol rotation value		0	true		
ACCOUNTID	String	20	Account ID	Utility billing account identifier			true		
LOCATIONID	String	20	Location Identifier	Location Identifier			true		
CRITICAL	SmallInteger	2	Critical Customer	Flag to indicate if this is a critical customer	BooleanDomain	0	true		
ENABLED	SmallInteger	2	Enabled Flag	Indicates if the asset is enabled within a geometric network.	EnabledDomain	1	true		
FIELDNOTES	String	255	Field Notes	Comments or notes from field staff, including surveyors, that are relevant to the asset			true		
NOTES	String	200	GIS Notes	GIS entry notes or comments relevant to the asset			true		
created_user	String	255	created_user	created_user			true		
created_date	Date	8	created_date	created_date			true		
last_edited_user	String	255	last_edited_user	last_edited_user			true		
last_edited_date	Date	8	last_edited_date	last_edited_date			true		

---

ssSystemValve - FeatureClass

Name ssSystemValve
ShapeType Point
FeatureType Simple
AliasName ss System Valves
HasM false
HasZ false
HasAttachments false
Description Sanitary sewer network valves used to isolate mains for maintenance and repair.

Field	DataType	Length	AliasName	Description	Domain	DefaultValue	IsNullable	Precision	Scale
FACILITYNUM	Integer	4	Facility Number	Locally asssigned numeric unique identifier populated by database admin created database trigger		0	true		
FACILITYID	String	20	Facility Identifier	Locally asssigned alpha-numeric unique			true		

				identifier populated by database admin created database trigger					
LEGACYID	String	20	Legacy ID (Unit ID)	Former asset identifier. To be moved to a related table.			true		
ACTIVESTATUS	String	20	Active Status	Identifies whether the asset is in use, not in use or removed from the ground	piActiveStatus	Active	true		
ACTIVEFLAG	SmallInteger	2	Active Flag	Identifies whether the feature is in use/active	BooleanDomain	1	true		
INVCLASS	String	20	Inventory Class	The method used to establish the geographic location of the asset	InventoryClass		true		
COLLECTEDDATE	Date	8	GPS Collected Date	Date the feature was located by a surveyor			true		
OWNEDBY	SmallInteger	2	Owned By	Indicates which organization owns the asset	AssetOwner	1	true		
MAINTBY	SmallInteger	2	Maintained By	Indicates which organization maintains the asset	AssetManager	1	true		
INSTALLDATE	Date	8	Install Date	The date the asset was installed			true		
LOCATION	String	200	Location Description	Identifies the meter box location (area_served in Utility Billing database). Value is copied to Cityworks work order Location Details field when attached to a work order.			true		
ADDRESS	String	50	Address	The address or closest address to the asset. Value is copied to Cityworks work order Address field when attached to a work order (address in Utility Billing database)			true		
PURCHASEDATE	Date	8	Purchase Date	The purchase date of the asset. Used for future asset management analysis.			true		

WARRANTYDATE	Date	8	Warranty Date	The date the warranty expires on the asset. If populated and asset is still under warranty, asset record will show up pink on the Cityworks work order.			true		
ASSETCOST	Double	8	Asset Cost	The replacement cost of the asset. If populated, this will be used for asset management analysis and repair/replace decisions.		0	true		
CONDITION	SmallInteger	2	Condition Rating	The condition rating of the asset. Used by Cityworks Analytics for condition analysis output. May be calculated within a Cityworks Inspection and updated from there to GIS.	piConditionPACP		true		
CONDITIONDATE	Date	8	Condition Date	The date of the last condition assessment. Can be updated from Cityworks Inspection to the GIS.			true		
SERVICELIFE	SmallInteger	2	Service Life	The expected number of years an asset is physically capable of continuing to operate. Used to anticipate retirement of assets and project funding needs.		0	true		
RUL	SmallInteger	2	Remaining Useful Life	The Remaining Useful Life of an asset calculated by subtracting the number of years since installation, from the sevice life. It will be heavily relied upon for asset management analysis.		0	true		
COF	SmallInteger	2	Consequence of Failure	The consequence of failure. Used in the BRE model as the impact due to asset		0	true		

				failure.					
POF	SmallInteger	2	Probability of Failure	Probability of Failure. Used in the BRE model to estimate the likelihood the predicted asset (or service) failure will occur and is adjusted for backup and redundancy of the asset.		0	true		
BRE	SmallInteger	2	Business Risk Exposure	Business Risk Exposure is a the product of probablity of failure (POF) and consequence of failure (COF). Values range from 1 (low risk) to 100 (high risk) and is used to prioritize investments.		0	true		
LASTINSPECTDATE	Date	8	Last Inspection Date	The date the asset was most recently inspected			true		
LASTMAINTDATE	Date	8	Last Maintenance Date	The date of the most recent maintenance activity			true		
MANUFACTURER	String	50	Manufacturer	The manufacturer or brand of the asset (company_cd in Utility Billing database)			true		
PROJECTNUM	String	32	City Project Number	The City's Project Number under which the asset was installed			true		
FILENUM	String	32	City File Number	The City's File Number			true		
WORKORDERNUM	String	60	City Work Order Number	The work order number for performing work on the asset (Cityworks, Qalert, etc)			true		
SURVEYRPTNUM	String	32	Survey Report Number	The City's Surveyor's Report Number under which the location of an asset or group of assets are captured, may be the same as the Service Request or Work Order Number			true		
DIAMETER	Double	8	Diameter	Identified the size of meter (meter_sz in	piPipeDiameter		true		

				Utility Billing database)					
XYCONVERTED	String	5	X, Y Converted	X, Y Converted	YesNo		true		
XCOORD	Double	8	X Coordinate	X-Coordinate of the asset (FL State Plane-East)		0	true		
YCOORD	Double	8	Y Coordinate	Y-Coordinate of the asset (FL State Plane-East)		0	true		
ZCOORD	Double	8	Z Coordinate	Z-Coordinate of the asset		0	true		
TOPNUTELEV	Double	8	Top Nut Elevation	Top Nut Elevation		0	true		
ANCILLARYROLE	SmallInteger	2	Ancillary Role	Identifies whether the asset participates in a geometric network as either a source or a sink	AncillaryRoleDomain	0	true		
ROTATION	Double	8	Rotation	Map symbol rotation value		0	true		
VALVETYPE	String	30	Valve Type	Type of control valve	piSystemValveType		true		
VALVEUSE	Integer	4	Valve Use	Valve Use	ssValveUse		true		
INMH	String	5	In Manhole	In Manhole	YesNo		true		
BYPASSVALVE	SmallInteger	2	Bypass Valve?	Identifies whether the asset is a bypass valve	BooleanDomain	0	true		
CLOCKTOCLOSE	SmallInteger	2	Clockwise To Close	Clockwise To Close	BooleanDomain	1	true		
NORMALLYOPEN	SmallInteger	2	Normally Open?	Identifies whether the asset is normally open	BooleanDomain	1	true		
TURNSTOCLOSE	Integer	4	Turns to Close	The number of turns required to close the asset		0	true		
OPERABLE	SmallInteger	2	Operable	Is inlet operable?	BooleanDomain	1	true		
CURROPEN	SmallInteger	2	Currently Open?	Identifies whether the asset is currently open	BooleanDomain	1	true		
ENABLED	SmallInteger	2	Enabled Flag	Indicates if the asset is enabled within a geometric network.	EnabledDomain	1	true		
FIELDNOTES	String	255	Field Notes	Comments or notes from field staff, including surveyors, that are relevant to the asset			true		
NOTES	String	200	GIS Notes	GIS entry notes or comments relevant to the asset			true		
created_user	String	255	created_user	created_user			true		
created_date	Date	8	created_date	created_date			true		
last_edited_user	String	255	last_edited_user	last_edited_user			true		

last_edited_date	Date	8	last_edited_date	last_edited_date			true		

DynamicValue - Table

Name DynamicValue
AliasName Dynamic Value
HasAttachments false
Description DynamicValue

Field	DataType	Length	AliasName	Description	Domain	DefaultValue	IsNullable	Precision	Scale
TABLENAME	String	254	Table Name	Table Name			true		
FIELDNAME	String	64	Field Name	Field Name			true		
VALUEMETHOD	String	254	Value Method	Value Method	ValueMethod		true		
VALUEINFO	String	254	Value Info	Value Info			true		
ON_CREATE	SmallInteger	2	On Create	On Create	EnabledDomain	1	true		
ON_CHANGE	SmallInteger	2	On Change (Attribute)	On Change (Attribute)	EnabledDomain	1	true		
ON_CHANGEGEO	SmallInteger	2	On Change (Geometry)	On Change (Geometry)	BooleanDomain	1	true		
ON_MANUAL	SmallInteger	2	Manual Only	Manual Only	EnabledDomain	0	true		
RUN_WEIGHT	SmallInteger	2	Rule Weight	Rule Weight		0	true		
COMMENTS	String	255	Comments	Used to record any pertinent information that the user or the City staff should be made aware of.			true		
created_user	String	255	created_user	created_user			true		
created_date	Date	8	created_date	created_date			true		
last_edited_user	String	255	last_edited_user	last_edited_user			true		
last_edited_date	Date	8	last_edited_date	last_edited_date			true		

GDB_ServiceItems - Table

Name GDB_ServiceItems
AliasName GDB Service Items
HasAttachments false
Description GDB_ServiceItems

Field	DataType	Length	AliasName	Description	Domain	DefaultValue	IsNullable	Precision	Scale
ItemType	SmallInteger	2	ItemType	ItemType			false		
ItemInfo	String	100000000	ItemInfo	ItemInfo			false		
ItemId	Integer	4	ItemId	ItemId			false		
DatasetName	String	1024	DatasetName	DatasetName			false		
AdvancedDrawingInfo	String	100000000	Advanced Drawing Information	Advanced Drawing Information			true		
created_user	String	255	created_user	created_user			true		
created_date	Date	8	created_date	created_date			true		
last_edited_user	String	255	last_edited_user	last_edited_user			true		
last_edited_date	Date	8	last_edited_date	last_edited_date			true		

GenerateId - Table

Name GenerateId
AliasName Generate Id
HasAttachments false
Description GenerateId

Field	DataType	Length	AliasName	Description	Domain	DefaultValue	IsNullable	Precision	Scale
SEQNAME	String	75	Sequence Name	Sequence Name			true		
SEQCOUNTER	Integer	4	Sequence Counter	Sequence Counter		0	true		
SEQINTERV	SmallInteger	2	Interval Value	Interval Value		0	true		
COMMENTS	String	255	Comments	Used to record any pertinent information that the user or the City staff should be made aware of.			true		
created_user	String	255	created_user	created_user			true		
created_date	Date	8	created_date	created_date			true		
last_edited_user	String	255	last_edited_user	last_edited_user			true		
last_edited_date	Date	8	last_edited_date	last_edited_date			true		

ssBendReference - Table

Name ssBendReference
AliasName Sanitary Sewer Bend Reference
HasAttachments false
Description ssBendReference

Field	DataType	Length	AliasName	Description	Domain	DefaultValue	IsNullable	Precision	Scale
FACILITYID	String	20	Facility Identifier	Locally asssigned alpha-numeric unique identifier populated by database admin created database trigger			true		
LEGACYID	String	20	Legacy ID (Unit ID)	Former asset identifier. To be moved to a related table.			true		
FEATUREID	Integer	4	FEATURE_ID	Feature ID from Unkown Point		0	true		
OLDID	String	6	Old ID	Old ID			true		
PROJECTNUM	String	32	City Project Number	The City's Project Number under which the asset was installed			true		
FILENUM	String	32	City File Number	The City's File Number			true		
DENUM	String	32	City Detail Number	The City's Detail Number			true		
IMPROVENUM	String	32	City Improvement Number	The City's Improvement Number			true		
DATUM	String	8	Datum	Identifies the datum used to establish the asset's vertical elevation	Datum		true		
IMAGEID	String	12	Old Image ID	Old Image ID			true		
INTDETAIL	String	4	City Intersection Detail	The City's Intersection Detail			true		
ASBUILTLOC	String	255	As-built Location	The URL or filepath to the electronic as-built documents			true		
created_user	String	255	created_user	created_user			true		
created_date	Date	8	created_date	created_date			true		

last_edited_user	String	255	last_edited_user	last_edited_user			true		
last_edited_date	Date	8	last_edited_date	last_edited_date			true		

ssCleanOutReference - Table

Name ssCleanOutReference
AliasName Sanitary Sewer Clean Out Reference
HasAttachments false
Description ssCleanOutReference

Field	DataType	Length	AliasName	Description	Domain	DefaultValue	IsNullable	Precision	Scale
FACILITYID	String	20	Facility Identifier	Locally asssigned alpha-numeric unique identifier populated by database admin created database trigger			true		
LEGACYID	String	20	Legacy ID (Unit ID)	Former asset identifier. To be moved to a related table.			true		
FEATUREID	Integer	4	FEATURE_ID	Feature ID from Unkown Point		0	true		
OLDID	String	6	Old ID	Old ID			true		
PROJECTNUM	String	32	City Project Number	The City's Project Number under which the asset was installed			true		
FILENUM	String	32	City File Number	The City's File Number			true		
DENUM	String	32	City Detail Number	The City's Detail Number			true		
IMPROVENUM	String	32	City Improvement Number	The City's Improvement Number			true		
DATUM	String	8	Datum	Identifies the datum used to establish the asset's vertical elevation	Datum		true		
IMAGEID	String	12	Old Image ID	Old Image ID			true		
INTDETAIL	String	4	City Intersection Detail	The City's Intersection Detail			true		
ASBUILTLOC	String	255	As-built Location	The URL or filepath to the electronic as-built documents			true		
created_user	String	255	created_user	created_user			true		
created_date	Date	8	created_date	created_date			true		
last_edited_user	String	255	last_edited_user	last_edited_user			true		
last_edited_date	Date	8	last_edited_date	last_edited_date			true		

ssControlValveReference - Table

Name ssControlValveReference
AliasName Sanitary Sewer Control Valve Reference
HasAttachments false
Description ssControlValveReference

Field	DataType	Length	AliasName	Description	Domain	DefaultValue	IsNullable	Precision	Scale
FACILITYID	String	20	Facility Identifier	Locally asssigned alpha-numeric			true		

				unique identifier populated by database admin created database trigger					
LEGACYID	String	20	Legacy ID (Unit ID)	Former asset identifier. To be moved to a related table.			true		
FEATUREID	Integer	4	FEATURE_ID	Feature ID from Unkown Point		0	true		
OLDID	String	6	Old ID	Old ID			true		
PROJECTNUM	String	32	City Project Number	The City's Project Number under which the asset was installed			true		
FILENUM	String	32	City File Number	The City's File Number			true		
DENUM	String	32	City Detail Number	The City's Detail Number			true		
IMPROVENUM	String	32	City Improvement Number	The City's Improvement Number			true		
DATUM	String	8	Datum	Identifies the datum used to establish the asset's vertical elevation	Datum		true		
IMAGEID	String	12	Old Image ID	Old Image ID			true		
INTDETAIL	String	4	City Intersection Detail	The City's Intersection Detail			true		
ASBUILTLOC	String	255	As-built Location	The URL or filepath to the electronic as-built documents			true		
created_user	String	255	created_user	created_user			true		
created_date	Date	8	created_date	created_date			true		
last_edited_user	String	255	last_edited_user	last_edited_user			true		
last_edited_date	Date	8	last_edited_date	last_edited_date			true		

ssEmergencyOverflowReference - Table

Name ssEmergencyOverflowReference
AliasName Sanitary Sewer Emergency Overflow Reference
HasAttachments false
Description ssEmergencyOverflowReference

Field	DataType	Length	AliasName	Description	Domain	DefaultValue	IsNullable	Precision	Scale
FACILITYID	String	20	Facility Identifier	Locally asssigned alpha-numeric unique identifier populated by database admin created database trigger			true		
LEGACYID	String	20	Legacy ID (Unit ID)	Former asset identifier. To be moved to a related table.			true		
FEATUREID	Integer	4	FEATURE_ID	Feature ID from Unkown Point		0	true		
OLDID	String	6	Old ID	Old ID			true		
PROJECTNUM	String	32	City Project Number	The City's Project Number under which the asset			true		

				was installed					
FILENUM	String	32	City File Number	The City's File Number			true		
DENUM	String	32	City Detail Number	The City's Detail Number			true		
IMPROVENUM	String	32	City Improvement Number	The City's Improvement Number			true		
DATUM	String	8	Datum	Identifies the datum used to establish the asset's vertical elevation	Datum		true		
IMAGEID	String	12	Old Image ID	Old Image ID			true		
INTDETAIL	String	4	City Intersection Detail	The City's Intersection Detail			true		
SEWERBOOK	String	2	Sewer Book	Sewer Book			true		
SEWERBOOKNUM	String	4	Sewer Book Sheet	Sewer Book Sheet			true		
ASBUILTLOC	String	255	As-built Location	The URL or filepath to the electronic as-built documents			true		
created_user	String	255	created_user	created_user			true		
created_date	Date	8	created_date	created_date			true		
last_edited_user	String	50	last_edited_user	last_edited_user			true		
last_edited_date	Date	8	last_edited_date	last_edited_date			true		

ssFittingReference - Table

Name ssFittingReference
AliasName Sanitary Sewer Fitting Reference
HasAttachments false
Description ssFittingReference

Field	DataType	Length	AliasName	Description	Domain	DefaultValue	IsNullable	Precision	Scale
FACILITYID	String	20	Facility Identifier	Locally asssigned alpha-numeric unique identifier populated by database admin created database trigger			true		
LEGACYID	String	20	Legacy ID (Unit ID)	Former asset identifier. To be moved to a related table.			true		
FEATUREID	Integer	4	FEATURE_ID	Feature ID from Unkown Point		0	true		
OLDID	String	6	Old ID	Old ID			true		
PROJECTNUM	String	32	City Project Number	The City's Project Number under which the asset was installed			true		
FILENUM	String	32	City File Number	The City's File Number			true		
DENUM	String	32	City Detail Number	The City's Detail Number			true		
IMPROVENUM	String	32	City Improvement Number	The City's Improvement Number			true		
DATUM	String	8	Datum	Identifies the datum used to establish the asset's vertical	Datum		true		

				elevation					
IMAGEID	String	12	Old Image ID	Old Image ID			true		
INTDETAIL	String	4	City Intersection Detail	The City's Intersection Detail			true		
ASBUILTLOC	String	255	As-built Location	The URL or filepath to the electronic as-built documents			true		
created_user	String	255	created_user	created_user			true		
created_date	Date	8	created_date	created_date			true		
last_edited_user	String	255	last_edited_user	last_edited_user			true		
last_edited_date	Date	8	last_edited_date	last_edited_date			true		

ssGravityMainReference - Table

Name ssGravityMainReference
AliasName Sanitary Sewer Gravity Main Reference
HasAttachments false
Description ssGravityMainReference

Field	DataType	Length	AliasName	Description	Domain	DefaultValue	IsNullable	Precision	Scale
FACILITYID	String	20	Facility Identifier	Locally asssigned alpha-numeric unique identifier populated by database admin created database trigger			true		
LEGACYID	String	20	Legacy ID (Unit ID)	Former asset identifier. To be moved to a related table.			true		
FEATUREID	Integer	4	FEATURE_ID	Feature ID from Unkown Point		0	true		
UNITID2	String	20	Old Downstream Unit ID	Old Downstream Unit ID			true		
OLDID	String	16	Old ID	Old ID			true		
PROJECTNUM	String	32	City Project Number	The City's Project Number under which the asset was installed			true		
FILENUM	String	32	City File Number	The City's File Number			true		
DENUM	String	32	City Detail Number	The City's Detail Number			true		
IMPROVENUM	String	32	City Improvement Number	The City's Improvement Number			true		
DATUM	String	8	Datum	Identifies the datum used to establish the asset's vertical elevation	Datum		true		
IMAGEID	String	12	Old Image ID	Old Image ID			true		
INTDETAIL	String	4	City Intersection Detail	The City's Intersection Detail			true		
SEWERBOOK	String	2	Sewer Book	Sewer Book			true		
SEWERBOOKNUM	String	5	Sewer Book Sheet	Sewer Book Sheet			true		
ASBUILTLOC	String	255	As-built Location	The URL or filepath to the electronic as-built documents			true		
created_user	String	255	created_user	created_user			true		

created_date	Date	8	created_date	created_date			true		
last_edited_user	String	255	last_edited_user	last_edited_user			true		
last_edited_date	Date	8	last_edited_date	last_edited_date			true		

ssLateralLineReference - Table

Name ssLateralLineReference
AliasName Sanitary Sewer Lateral Line Reference
HasAttachments false
Description ssLateralLineReference

Field	DataType	Length	AliasName	Description	Domain	DefaultValue	IsNullable	Precision	Scale
FACILITYID	String	20	Facility Identifier	Locally asssigned alpha-numeric unique identifier populated by database admin created database trigger			true		
PROJECTNUM	String	32	City Project Number	The City's Project Number under which the asset was installed			true		
FILENUM	String	32	City File Number	The City's File Number			true		
DENUM	String	32	City Detail Number	The City's Detail Number			true		
IMPROVENUM	String	32	City Improvement Number	The City's Improvement Number			true		
DATUM	String	8	Datum	Identifies the datum used to establish the asset's vertical elevation	Datum		true		
INTDETAIL	String	4	City Intersection Detail	The City's Intersection Detail			true		
ASBUILTLOC	String	255	As-built Location	The URL or filepath to the electronic as-built documents			true		
created_user	String	255	created_user	created_user			true		
created_date	Date	8	created_date	created_date			true		
last_edited_user	String	255	last_edited_user	last_edited_user			true		
last_edited_date	Date	8	last_edited_date	last_edited_date			true		

ssManholeReference - Table

Name ssManholeReference
AliasName Sanitary Sewer Manhole Reference
HasAttachments false
Description ssManholeReference

Field	DataType	Length	AliasName	Description	Domain	DefaultValue	IsNullable	Precision	Scale
FACILITYID	String	20	Facility Identifier	Locally asssigned alpha-numeric unique identifier populated by database admin created database trigger			true		
LEGACYID	String	20	Legacy ID (Unit ID)	Former asset identifier. To be moved to a			true		

				related table.					
FEATUREID	Integer	4	FEATURE_ID	Feature ID from Unkown Point		0	true		
OLDID	String	6	Old ID	Old ID			true		
PROJECTNUM	String	32	City Project Number	The City's Project Number under which the asset was installed			true		
FILENUM	String	32	City File Number	The City's File Number			true		
DENUM	String	32	City Detail Number	The City's Detail Number			true		
IMPROVENUM	String	32	City Improvement Number	The City's Improvement Number			true		
DATUM	String	8	Datum	Identifies the datum used to establish the asset's vertical elevation	Datum		true		
IMAGEID	String	12	Old Image ID	Old Image ID			true		
INTDETAIL	String	4	City Intersection Detail	The City's Intersection Detail			true		
SEWERBOOK	String	2	Sewer Book	Sewer Book			true		
SEWERBOOKNUM	String	5	Sewer Book Sheet	Sewer Book Sheet			true		
ASBUILT	String	10	As-built Location	As-built Location			true		
ASBUILTLOC	String	255	As-built Location	The URL or filepath to the electronic as-built documents			true		
created_user	String	255	created_user	created_user			true		
created_date	Date	8	created_date	created_date			true		
last_edited_user	String	255	last_edited_user	last_edited_user			true		
last_edited_date	Date	8	last_edited_date	last_edited_date			true		

ssNetworkStructureReference - Table

Name ssNetworkStructureReference
AliasName Sanitary Sewer Network Structure Reference
HasAttachments false
Description ssNetworkStructureReference

Field	DataType	Length	AliasName	Description	Domain	DefaultValue	IsNullable	Precision	Scale
FACILITYID	String	20	Facility Identifier	Locally asssigned alpha-numeric unique identifier populated by database admin created database trigger			true		
LEGACYID	String	20	Legacy ID (Unit ID)	Former asset identifier. To be moved to a related table.			true		
FEATUREID	Integer	4	FEATURE_ID	Feature ID from Unkown Point		0	true		
OLDID	String	6	Old ID	Old ID			true		
PROJECTNUM	String	32	City Project Number	The City's Project Number under which the asset was installed			true		
FILENUM	String	32	City File Number	The City's File Number			true		

DENUM	String	32	City Detail Number	The City's Detail Number			true		
IMPROVENUM	String	32	City Improvement Number	The City's Improvement Number			true		
DATUM	String	8	Datum	Identifies the datum used to establish the asset's vertical elevation	Datum		true		
IMAGEID	String	12	Old Image ID	Old Image ID			true		
INTDETAIL	String	4	City Intersection Detail	The City's Intersection Detail			true		
ASBUILTLOC	String	255	As-built Location	The URL or filepath to the electronic as-built documents			true		
created_user	String	255	created_user	created_user			true		
created_date	Date	8	created_date	created_date			true		
last_edited_user	String	255	last_edited_user	last_edited_user			true		
last_edited_date	Date	8	last_edited_date	last_edited_date			true		

ssPressurizedMainReference - Table

Name ssPressurizedMainReference
AliasName Sanitary Sewer Pressurized Main Reference
HasAttachments false
Description ssPressurizedMainReference

Field	DataType	Length	AliasName	Description	Domain	DefaultValue	IsNullable	Precision	Scale
FACILITYID	String	20	Facility Identifier	Locally asssigned alpha-numeric unique identifier populated by database admin created database trigger			true		
LEGACYID	String	20	Legacy ID (Unit ID)	Former asset identifier. To be moved to a related table.			true		
FEATUREID	Integer	4	FEATURE_ID	Feature ID from Unkown Point		0	true		
UNITID2	String	20	Old Downstream Unit ID	Old Downstream Unit ID			true		
OLDID	String	16	Old ID	Old ID			true		
PROJECTNUM	String	32	City Project Number	The City's Project Number under which the asset was installed			true		
FILENUM	String	32	City File Number	The City's File Number			true		
DENUM	String	32	City Detail Number	The City's Detail Number			true		
IMPROVENUM	String	32	City Improvement Number	The City's Improvement Number			true		
DATUM	String	8	Datum	Identifies the datum used to establish the asset's vertical elevation	Datum		true		
INTDETAIL	String	4	City Intersection Detail	The City's Intersection Detail			true		

ASBUILTLOC	String	255	As-built Location	The URL or filepath to the electronic as-built documents			true		
created_user	String	255	created_user	created_user			true		
created_date	Date	8	created_date	created_date			true		
last_edited_user	String	255	last_edited_user	last_edited_user			true		
last_edited_date	Date	8	last_edited_date	last_edited_date			true		

ssPumpStationReference - Table

Name ssPumpStationReference
AliasName Sanitary Sewer Pump Station Reference
HasAttachments false
Description ssPumpStationReference

Field	DataType	Length	AliasName	Description	Domain	DefaultValue	IsNullable	Precision	Scale
FACILITYID	String	20	Facility Identifier	Locally asssigned alpha-numeric unique identifier populated by database admin created database trigger			true		
LEGACYID	String	20	Legacy ID (Unit ID)	Former asset identifier. To be moved to a related table.			true		
FEATUREID	Integer	4	FEATURE_ID	Feature ID from Unkown Point		0	true		
OLDID	String	6	Old ID	Old ID			true		
PROJECTNUM	String	32	City Project Number	The City's Project Number under which the asset was installed			true		
FILENUM	String	32	City File Number	The City's File Number			true		
DENUM	String	32	City Detail Number	The City's Detail Number			true		
IMPROVENUM	String	32	City Improvement Number	The City's Improvement Number			true		
DATUM	String	8	Datum	Identifies the datum used to establish the asset's vertical elevation	Datum		true		
IMAGEID	String	12	Old Image ID	Old Image ID			true		
INTDETAIL	String	4	City Intersection Detail	The City's Intersection Detail			true		
ASBUILTLOC	String	255	As-built Location	The URL or filepath to the electronic as-built documents			true		
created_user	String	255	created_user	created_user			true		
created_date	Date	8	created_date	created_date			true		
last_edited_user	String	255	last_edited_user	last_edited_user			true		
last_edited_date	Date	8	last_edited_date	last_edited_date			true		

ssServiceConnectionReference - Table

Name ssServiceConnectionReference
AliasName Sanitary Sewer Service Connection Reference

HasAttachments false
Description ssServiceConnectionReference

Field	DataType	Length	AliasName	Description	Domain	DefaultValue	IsNullable	Precision	Scale
FACILITYID	String	20	Facility Identifier	Locally asssigned alpha-numeric unique identifier populated by database admin created database trigger			true		
PROJECTNUM	String	32	City Project Number	The City's Project Number under which the asset was installed			true		
FILENUM	String	32	City File Number	The City's File Number			true		
DENUM	String	32	City Detail Number	The City's Detail Number			true		
IMPROVENUM	String	32	City Improvement Number	The City's Improvement Number			true		
DATUM	String	8	Datum	Identifies the datum used to establish the asset's vertical elevation	Datum		true		
INTDETAIL	String	4	City Intersection Detail	The City's Intersection Detail			true		
ASBUILTLOC	String	255	As-built Location	The URL or filepath to the electronic as-built documents			true		
created_user	String	255	created_user	created_user			true		
created_date	Date	8	created_date	created_date			true		
last_edited_user	String	255	last_edited_user	last_edited_user			true		
last_edited_date	Date	8	last_edited_date	last_edited_date			true		

ssSystemValveReference - Table

Name ssSystemValveReference
AliasName Sanitary Sewer System Valve Reference
HasAttachments false
Description ssSystemValveReference

Field	DataType	Length	AliasName	Description	Domain	DefaultValue	IsNullable	Precision	Scale
FACILITYID	String	20	Facility Identifier	Locally asssigned alpha-numeric unique identifier populated by database admin created database trigger			true		
LEGACYID	String	20	Legacy ID (Unit ID)	Former asset identifier. To be moved to a related table.			true		
FEATUREID	Integer	4	FEATURE_ID	Feature ID from Unkown Point		0	true		
OLDID	String	6	Old ID	Old ID			true		
PROJECTNUM	String	32	City Project Number	The City's Project Number under which the asset was installed			true		

FILENUM	String	32	City File Number	The City's File Number			true		
DENUM	String	32	City Detail Number	The City's Detail Number			true		
IMPROVENUM	String	32	City Improvement Number	The City's Improvement Number			true		
DATUM	String	8	Datum	Identifies the datum used to establish the asset's vertical elevation	Datum		true		
IMAGEID	String	12	Old Image ID	Old Image ID			true		
INTDETAIL	String	4	City Intersection Detail	The City's Intersection Detail			true		
ASBUILTLOC	String	255	As-built Location	The URL or filepath to the electronic as-built documents			true		
created_user	String	255	created_user	created_user			true		
created_date	Date	8	created_date	created_date			true		
last_edited_user	String	255	last_edited_user	last_edited_user			true		
last_edited_date	Date	8	last_edited_date	last_edited_date			true		

ssBendReferenceRC - RelationshipClass

Name ssBendReferenceRC
Cardinality OneToOne
IsAttributed false
IsComposite false
ForwardPathLabel ssBendReference
BackwardPathLabel ssBend
Description ssBendReferenceRC

Origin Class Name	Origin Primary Key	Origin Foreign Key
ssBend	FACILITYID	FACILITYID

Destination Class Name	Destination Primary Key	Destination Foreign Key
ssBendReference		

ssCleanOutReferenceRC - RelationshipClass

Name ssCleanOutReferenceRC
Cardinality OneToOne
IsAttributed false
IsComposite false
ForwardPathLabel ssCleanOutReference
BackwardPathLabel ssCleanOut
Description ssCleanOutReferenceRC

Origin Class Name	Origin Primary Key	Origin Foreign Key
ssCleanOut	FACILITYID	FACILITYID

Destination Class Name	Destination Primary Key	Destination Foreign Key
ssCleanOutReference		

ssControlValveReferenceRC - RelationshipClass

Name ssControlValveReferenceRC

Cardinality OneToOne
IsAttributed false
IsComposite false
ForwardPathLabel ssControlValveReference
BackwardPathLabel ssControlValve
Description ssControlValveReferenceRC

Origin Class Name	Origin Primary Key	Origin Foreign Key
ssControlValve	FACILITYID	FACILITYID

Destination Class Name	Destination Primary Key	Destination Foreign Key
ssControlValveReference		

---

ssEmergencyOverflowReferenceRC - RelationshipClass

Name ssEmergencyOverflowReferenceRC
Cardinality OneToOne
IsAttributed false
IsComposite false
ForwardPathLabel ssEmergencyOverflowReference
BackwardPathLabel ssEmergencyOverflow
Description ssEmergencyOverflowReferenceRC

Origin Class Name	Origin Primary Key	Origin Foreign Key
ssEmergencyOverflow	FACILITYID	FACILITYID

Destination Class Name	Destination Primary Key	Destination Foreign Key
ssEmergencyOverflowReference		

---

ssFittingReferenceRC - RelationshipClass

Name ssFittingReferenceRC
Cardinality OneToOne
IsAttributed false
IsComposite false
ForwardPathLabel ssFittingReference
BackwardPathLabel ssFitting
Description ssFittingReferenceRC

Origin Class Name	Origin Primary Key	Origin Foreign Key
ssFitting	FACILITYID	FACILITYID

Destination Class Name	Destination Primary Key	Destination Foreign Key
ssFittingReference		

---

ssGravityMainReferenceRC - RelationshipClass

Name ssGravityMainReferenceRC
Cardinality OneToOne
IsAttributed false
IsComposite false
ForwardPathLabel ssGravityMainReference
BackwardPathLabel ssGravityMain
Description ssGravityMainReferenceRC

Origin Class Name	Origin Primary Key	Origin Foreign Key

ssGravityMain	FACILITYID	FACILITYID

Destination Class Name	Destination Primary Key	Destination Foreign Key
ssGravityMainReference		

ssLateralLineReferenceRC - RelationshipClass

Name ssLateralLineReferenceRC
Cardinality OneToOne
IsAttributed false
IsComposite false
ForwardPathLabel ssLateralLineReference
BackwardPathLabel ssLateralLine
Description ssLateralLineReferenceRC

Origin Class Name	Origin Primary Key	Origin Foreign Key
ssLateralLine	FACILITYID	FACILITYID

Destination Class Name	Destination Primary Key	Destination Foreign Key
ssLateralLineReference		

ssManholeReferenceRC - RelationshipClass

Name ssManholeReferenceRC
Cardinality OneToOne
IsAttributed false
IsComposite false
ForwardPathLabel ssManholeReference
BackwardPathLabel ssManhole
Description ssManholeReferenceRC

Origin Class Name	Origin Primary Key	Origin Foreign Key
ssManhole	FACILITYID	FACILITYID

Destination Class Name	Destination Primary Key	Destination Foreign Key
ssManholeReference		

ssNetworkStructureReferenceRC - RelationshipClass

Name ssNetworkStructureReferenceRC
Cardinality OneToOne
IsAttributed false
IsComposite false
ForwardPathLabel ssNetworkStructureReference
BackwardPathLabel ssNetworkStructure
Description ssNetworkStructureReferenceRC

Origin Class Name	Origin Primary Key	Origin Foreign Key
ssNetworkStructure	FACILITYID	FACILITYID

Destination Class Name	Destination Primary Key	Destination Foreign Key
ssNetworkStructureReference		

ssPressurizedMainReferenceRC - RelationshipClass

Name ssPressurizedMainReferenceRC
Cardinality OneToOne
IsAttributed false
IsComposite false
ForwardPathLabel ssPressurizedMainReference
BackwardPathLabel ssPressurizedMain
Description ssPressurizedMainReferenceRC

Origin Class Name	Origin Primary Key	Origin Foreign Key
ssPressurizedMain	FACILITYID	FACILITYID

Destination Class Name	Destination Primary Key	Destination Foreign Key
ssPressurizedMainReference		

---

ssPumpStationReferenceRC - RelationshipClass

Name ssPumpStationReferenceRC
Cardinality OneToOne
IsAttributed false
IsComposite false
ForwardPathLabel ssPumpStationReference
BackwardPathLabel ssPumpStation
Description ssPumpStationReferenceRC

Origin Class Name	Origin Primary Key	Origin Foreign Key
ssPumpStation	FACILITYID	FACILITYID

Destination Class Name	Destination Primary Key	Destination Foreign Key
ssPumpStationReference		

---

ssServiceConnectionReferenceRC - RelationshipClass

Name ssServiceConnectionReferenceRC
Cardinality OneToOne
IsAttributed false
IsComposite false
ForwardPathLabel ssServiceConnectionReference
BackwardPathLabel ssServiceConnection
Description ssServiceConnectionReferenceRC

Origin Class Name	Origin Primary Key	Origin Foreign Key
ssServiceConnection	FACILITYID	FACILITYID

Destination Class Name	Destination Primary Key	Destination Foreign Key
ssServiceConnectionReference		

---

ssSystemValveReferenceRC - RelationshipClass

Name ssSystemValveReferenceRC
Cardinality OneToOne
IsAttributed false
IsComposite false
ForwardPathLabel ssSystemValveReference
BackwardPathLabel ssSystemValve
Description ssSystemValveReferenceRC

Origin Class Name	Origin Primary Key	Origin Foreign Key
ssSystemValve	FACILITYID	FACILITYID

Destination Class Name	Destination Primary Key	Destination Foreign Key
ssSystemValveReference		

AncillaryRoleDomain - Domain

DomainName AncillaryRoleDomain
FieldType SmallInteger
Domain Type CodedValue

Code	Name
0	None
1	Source
2	Sink

AssetManager - Domain

DomainName AssetManager
Description Indicates which organization maintains the asset
FieldType SmallInteger
Domain Type CodedValue

Code	Name
1	City
2	County
3	State
4	Private
5	Other
-99	Unknown

AssetOwner - Domain

DomainName AssetOwner
Description Indicates which organization owns the asset
FieldType SmallInteger
Domain Type CodedValue

Code	Name
1	City
2	County
3	State
4	Private
5	Other
-99	Unknown

BooleanDomain - Domain

DomainName BooleanDomain
FieldType SmallInteger
Domain Type CodedValue

Code	Name
0	False
1	True

ControlSetRef - Domain

DomainName ControlSetRef
FieldType String
Domain Type CodedValue

Code	Name
N	North
NE	North East
E	East
SE	South East
S	South
SW	South West
W	West
NW	North West
NORTH RIM	North Rim

Datum - Domain

DomainName Datum
Description Identifies the datum used to establish the asset's vertical elevation
FieldType String
Domain Type CodedValue

Code	Name
29	NGVD 29
88	NAVD 88
-99	Unknown

Direction - Domain

DomainName Direction
FieldType String
Domain Type CodedValue

Code	Name
East	East
North	North
South	South
West	West
Northeast	Northeast
Northwest	Northwest
Southeast	Southeast
Southwest	Southwest
North/South	North/South
East/West	East/West
Northeast/Northwest	Northeast/Northwest
Southeast/Southwest	Southeast/Southwest

EnabledDomain - Domain

DomainName EnabledDomain
FieldType SmallInteger
Domain Type CodedValue

Code	Name
0	False
1	True

InventoryClass - Domain

DomainName	InventoryClass
Description	The method used to establish the geographic location of the asset
FieldType	String
Domain Type	CodedValue

Code	Name
DGPS	DGPS (1-meter)
GIS	GIS Entry
GPS	GPS (< 1-foot)
GPS-Converted	GPS Asbuilt Converted (< 1-foot)

piAccessDiameter - Domain

DomainName	piAccessDiameter
Description	The diameter of the receiving chamber for circular access points
FieldType	Double
Domain Type	Range

Minimum Value	Maximum Value
0	72

piAccessType - Domain

DomainName	piAccessType
Description	Method for accessing the opening
FieldType	String
Domain Type	CodedValue

Code	Name
Door	Door
Grate	Grate
Cover	Cover
Hand	Hand
Lid	Lid
Unknown	Unknown

piActiveStatus - Domain

DomainName	piActiveStatus
Description	Describes the status of the easement, whether Vacated or Dedicated. Vacated is used to identify easements that have been released and are no longer active (no longer Dedicated). Dedicated are easements that are valid and are in effect.
FieldType	String
Domain Type	CodedValue

Code	Name
Active	Active
Abandoned	Abandoned
Inactive	Inactive
Removed	Removed
Not Found	Not Found
Inactive-Plugged	Inactive-Plugged

piCleanoutTypes - Domain

DomainName piCleanoutTypes
FieldType String
Domain Type CodedValue

Code	Name
Cleanout	Cleanout
Flushing Structure	Flushing Structure
Lamp Hole	Lamp Hole
Other	Other
Unknown	Unknown

piConditionPACP - Domain

DomainName piConditionPACP
Description The condition rating of the asset. Used by Cityworks Analytics for condition analysis output. May be calculated within a Cityworks Inspection and updated from there to GIS.
FieldType SmallInteger
Domain Type CodedValue

Code	Name
1	Severity 1 - Minor defect grade
2	Severity 2 - Minor to moderate defect grade
3	Severity 3 - Moderate defect grade
4	Severity 4 - Significant defect grade
5	Severity 5 - Most significant defect grade

piControlValveType - Domain

DomainName piControlValveType
Description The type of control valve
FieldType String
Domain Type CodedValue

Code	Name
Altitude	Altitude
Blowoff	Blowoff
Combination	Combination
Vacuum	Vacuum
Air Control	Air Control
Air Gap	Air Gap
Air Release	Air Release
Atmospheric Vacuum	Atmospheric Vacuum
Backflow Control	Backflow Control
Double Check	Double Check
Pressure Vacuum	Pressure Vacuum
Pressure Reducer	Pressure Reducer
Simple Check	Simple Check
Vacuum Breaker	Vacuum Breaker
Vacuum Release	Vacuum Release
Surge Relief	Surge Relief
Snubber	Snubber
CLA	CLA
RPZ	Reduced Pressure Zone
Other	Other
Unknown	Unknown

piDischargePointType - Domain

DomainName	piDischargePointType
Description	The type of sanitary sewer discharge
FieldType	String
Domain Type	CodedValue

Code	Name
Outfall	Outfall
Overflow	Overflow
Standard Outlet	Standard Outlet
Other	Other
Unknown	Unknown

piFittingType - Domain

DomainName	piFittingType
Description	The type of fitting
FieldType	String
Domain Type	CodedValue

Code	Name
Bend	Bend
Cap	Cap
Coupling	Coupling
Cross	Cross
Expansion Joint	Expansion Joint
Over Under	Over Under
Reducer	Reducer
Reducing Cross	Reducing Cross
Reducing Tee	Reducing Tee
Sleeve	Sleeve
Tap	Tap
Tee	Tee
Transition	Transition
Other	Other
Unknown	Unknown
Wye	Wye
Taping Tee	Taping Tee
Offset	Offset
Plug	Plug

piLiningMethod - Domain

DomainName	piLiningMethod
Description	The type of lining method
FieldType	String
Domain Type	CodedValue

Code	Name
CP	Cured in Place
FF	Fold and Form or Deform/Reform
SN	Segmented Panel
SP	Segmented Pipe
SW	Spiral Wound
OTH	Other
NONE	None

piManholeCoverType - Domain

DomainName	piManholeCoverType
Description	The type of manhole cover
FieldType	String
Domain Type	CodedValue

Code	Name
Standard W/ Lock	Standard W/ Lock
Standard W/ Ears	Standard W/ Ears
Non-District	Non-District
Water Tight	Water Tight
27" Diameter	27" Diameter
42" Diameter	42" Diameter
Large - Water Tight	Large - Water Tight
Rectangular	Rectangular
Other	Other
Unknown	Unknown

piManholeType - Domain

DomainName	piManholeType
Description	The type of manhole
FieldType	String
Domain Type	CodedValue

Code	Name
STD	Standard
DRP	Drop
SPL	Split
DIV	Diversion
SED	Sedimentation
OTH	Other
UNK	Unknown
CON	Conflict
TER	Terminal
WEI	Weir

piPipeDiameter - Domain

DomainName	piPipeDiameter
Description	The diameter of the asset
FieldType	Double
Domain Type	CodedValue

Code	Name
0.75	3/4"
1	1"
1.25	1 1/4"
1.5	1 1/2"
2	2"
2.5	2 1/2"
3	3"
4	4"
6	6"
8	8"
10	10"
12	12"
14	14"

15	15"
16	16"
18	18"
20	20"
24	24"
30	30"
36	36"
40	40"
42	42"
48	48"
54	54"
60	60'
66	66"
72	72"
75	75"
-1	Other
11	11"
13	13"
19	19"
21	21"
22	22"
23	23"
27	27"
33	33"
45	45"
84	84"
96	96"
102	102"
-99	Unknown
-88	Not Applicable
41	41"
52	52"
5	5"

---

piPipeMaterial - Domain

DomainName	piPipeMaterial
Description	The construction material of the asset
FieldType	String
Domain Type	CodedValue

Code	Name
ABS	ABS Plastic
ASP	Asphalt
BR	Brick
CT	Clay Tile
CSB	Concrete Segments (Bolted)
CSU	Concrete Segments (Unbolted)
CMP	Corrugated Metal
CIPP	Cured In Place
DIP	Ductile Iron
FRP	Fiberglass Reinforced
EARGEO	Earth & Geotextile
EAR	Earthen
GEO	Geotextile
GRC	Glass Reinforced Cement
OB	Pitch Fiber (Orangeburg)

PSC	Plastic/Steel Composite
PE	Polyethylene
PP	Polypropylene
PVC	Polyvinyl Chloride
PCCP	Pre-Stressed Concrete Cylinder
RCP	Reinforced Concrete
RPM	Reinforced Plastic (Truss)
SB	Segmented Block
SP	Steel
TTE	Transite
VCP	Vitrified Clay
WD	Wood
BMP	Brick Masonry
HDPE	High Density Polyethylene
STL	Stainless Steel
RCPC	Reinforced concrete pipe w cylinder
PBL	Polybutylene
CSTL	Corrugated Steel
CAL	Corrugated Aluminimum
CPEL	Corrugated Polyethylene
ALU	Aluminum pipe
CONC	Concrete (Non-Reinforced)
ACP	Asbestos Cement
CIP	Cast Iron
CUP	Copper
GIP	Galvanized Pipe
ZZZ	Other
XXX	Unknown
LEAD	Lead

piPipeShape - Domain

DomainName	piPipeShape
Description	The shape of the main
FieldType	String
Domain Type	CodedValue

Code	Name
Circular	Circular
Horseshoe	Horseshoe
Oblong	Oblong
Rectangular	Rectangular
Trapezoidal	Trapezoidal
Triangular	Triangular
Other	Other
Unknown	Unknown

piSystemValveType - Domain

DomainName	piSystemValveType
Description	Type of control valve
FieldType	String
Domain Type	CodedValue

Code	Name
Ball	Ball
Butterfly	Butterfly

Cone	Cone
Gate	Gate
Plug	Plug
Roundway	Roundway
Other	Other
Unknown	Unknown
Tapping	Tapping
Bypass	Bypass
Check	Check

ssNetworkStructureType - Domain

DomainName	ssNetworkStructureType
Description	The type of control structure
FieldType	String
Domain Type	CodedValue

Code	Name
Diversion Chamber	Diversion Chamber
Diversion Point	Diversion Point
Junction Chamber	Junction Chamber
Production Well	Production Well
Pump Station	Pump Station
Split Manhole	Split Manhole
Storage Basin	Storage Basin
Tide Chamber	Tide Chamber
Treatment Plant	Treatment Plant
Lift Station	Lift Station
Discharge Structure	Discharge Structure
Unknown	Unknown
Other	Other
Virtual Junction	Virtual Junction
Flow Meter	Flow Meter
Monitoring Well	Monitoring Well
Pump	Pump
Backflow Prevention	Backflow Prevention
Grease Separator	Grease Separator
Injection Well	Injection Well
ASR Well	Aquifer Storage and Recovery Well
Master Meter	Master Meter

ssPumpStationType - Domain

DomainName	ssPumpStationType
Description	Type of pump station
FieldType	String
Domain Type	CodedValue

Code	Name
Lift Station	Lift Station
Pump Around Station	Pump Around Station
Pump Station	Pump Station
Repump Station	Repump Station
Unknown	Unknown

ssValveUse - Domain

DomainName ssValveUse
Description Use of the valve
FieldType Integer
Domain Type CodedValue

Code	Name
23	Bypass
24	Shutoff/Isolation
25	Backflow preventor
26	Tapping
-99	Unknown

ssWaterType - Domain

DomainName ssWaterType
Description Type of control valve
FieldType String
Domain Type CodedValue

Code	Name
Treated	Treated Water
Combined	Combined Waste Water
Potable	Potable Water
Raw	Raw Water
Reclaimed	Reclaimed Water
Salt	Salt Water
Sewage	Sewage
Storm	Storm Runoff
Effluent	Waste Water Effluent
Overflow	Overflow

ValueMethod - Domain

DomainName ValueMethod
FieldType String
Domain Type CodedValue

Code	Name
ANGLE	ANGLE
AUTONUMBER	AUTONUMBER
CASCADE_ATTRIBUTE	CASCADE_ATTRIBUTE
COPY_FEATURE	COPY_FEATURE
COPY_LINKED_RECORD	COPY_LINKED_RECORD
CREATE_LINKED_RECORD	CREATE_LINKED_RECORD
CREATE_PERP_LINE	CREATE_PERP_LINE
CREATE_PERP_LINE_TO_LINE	CREATE_PERP_LINE_TO_LINE
CURRENT_USER	CURRENT_USER
EDGE_STATS	EDGE_STATS
EXPRESSION	EXPRESSION
FEATURE_STATS	FEATURE_STATS
FIELD	FIELD
FIELD_TRIGGER	FIELD_TRIGGER
FROM_EDGE_FIELD	FROM_EDGE_FIELD
FROM_EDGE_MULTI_FIELD_INTERSECT	FROM_EDGE_MULTI_FIELD_INTERSECT
FROM_EDGE_STATS	FROM_EDGE_STATS
FROM_JUNCTION_FIELD	FROM_JUNCTION_FIELD
GENERATE_ID	GENERATE_ID

GENERATE_ID_BY_INTERSECT	GENERATE_ID_BY_INTERSECT
GET_ADDRESS_FROM_CENTERLINE	GET_ADDRESS_FROM_CENTERLINE
GET_ADDRESS_USING_ARCGIS_SERVICE	GET_ADDRESS_USING_ARCGIS_SERVICE
GET_ADDRESS_USING_GEOCODER	GET_ADDRESS_USING_GEOCODER
GUID	GUID
INTERSECT_STATS	INTERSECT_STATS
INTERSECTING_BOOLEAN	INTERSECTING_BOOLEAN
INTERSECTING_COUNT	INTERSECTING_COUNT
INTERSECTING_EDGE	INTERSECTING_EDGE
INTERSECTING_FEATURE	INTERSECTING_FEATURE
INTERSECTING_FEATURE_DISTANCE	INTERSECTING_FEATURE_DISTANCE
INTERSECTING_LAYER_DETAILS	INTERSECTING_LAYER_DETAILS
INTERSECTING_RASTER	INTERSECTING_RASTER
JUNCTION_ROTATION	JUNCTION_ROTATION
LAST_VALUE	LAST_VALUE
LATITUDE	LATITUDE
LENGTH	LENGTH
LINK_TABLE_ASSET	LINK_TABLE_ASSET
LONGITUDE	LONGITUDE
MAP_INFO	MAP_INFO
MINIMUM_LENGTH	MINIMUM_LENGTH
MULTI_FIELD_INTERSECT	MULTI_FIELD_INTERSECT
NEAREST_FEATURE	NEAREST_FEATURE
NEAREST_FEATURE_ATTRIBUTES	NEAREST_FEATURE_ATTRIBUTES
OFFSET	OFFSET
PREVIOUS_VALUE	PREVIOUS_VALUE
PROMPT	PROMPT
SET_MEASURES	SET_MEASURES
SIDE	SIDE
SPLIT_INTERSECTING_FEATURE	SPLIT_INTERSECTING_FEATURE
TIMESTAMP	TIMESTAMP
TO_EDGE_FIELD	TO_EDGE_FIELD
TO_EDGE_MULTI_FIELD_INTERSECT	TO_EDGE_MULTI_FIELD_INTERSECT
TO_EDGE_STATS	TO_EDGE_STATS
TO_JUNCTION_FIELD	TO_JUNCTION_FIELD
TRIGGER_AAEVENT_FROM_EDGE	TRIGGER_AAEVENT_FROM_EDGE
TRIGGER_AAEVENT_FROM_JUNCTION	TRIGGER_AAEVENT_FROM_JUNCTION
TRIGGER_AAEVENT_INTERSECTING_FEATURE	TRIGGER_AAEVENT_INTERSECTING_FEATURE
TRIGGER_AAEVENT_TO_EDGE	TRIGGER_AAEVENT_TO_EDGE
TRIGGER_AAEVENT_TO_JUNCTION	TRIGGER_AAEVENT_TO_JUNCTION
UPDATE_FROM_EDGE_FIELD	UPDATE_FROM_EDGE_FIELD
UPDATE_FROM_JUNCTION_FIELD	UPDATE_FROM_JUNCTION_FIELD
UPDATE_INTERSECTING_FEATURE	UPDATE_INTERSECTING_FEATURE
UPDATE_LINKED_RECORD	UPDATE_LINKED_RECORD
UPDATE_TO_EDGE_FIELD	UPDATE_TO_EDGE_FIELD
UPDATE_TO_JUNCTION_FIELD	UPDATE_TO_JUNCTION_FIELD
VALIDATE_ATTRIBUTE_LOOKUP	VALIDATE_ATTRIBUTE_LOOKUP
VALIDATE_ATTRIBUTES	VALIDATE_ATTRIBUTES
VALIDATE_CONNECTIVITY	VALIDATE_CONNECTIVITY
VALIDATE_DOMAIN	VALIDATE_DOMAIN
X_COORDINATE	X_COORDINATE
Y_COORDINATE	Y_COORDINATE

YesNo - Domain

DomainName YesNo
FieldType String

Domain Type CodedValue

Code	Name
Yes	Yes
No	No

SECTION 01400

QUALITY CONTROL

PART 1 – GENERAL

1.01 THE REQUIREMENT

A. Testing Laboratory Services

1. Laboratory testing and checking and all certifications required by the Specifications, including the cost of transporting all samples and test specimens, shall be provided by the Contractor unless otherwise indicated in the Specifications. Payment for laboratory services shall be made from the Allowance item entitled “Laboratory Testing Fees”. Payment shall be made based on the actual cost of service upon submission of paid invoices.

2. The Contractor shall retain the services of an independent, certified testing laboratory to perform all testing required by the Contract Documents and by permitting agencies. The Contractor shall submit the name of the testing laboratory and evidence of all appropriate certifications for approval by the Engineer and the City.

3. In the case of a conflict between this Specification Section and the Contractor’s Quality Management Plan, the more stringent requirement between the two documents shall govern.

4. Procedure

   a. The Contractor shall plan and conduct his operations to permit taking of field samples and test specimens, as required, and to allow adequate time for laboratory tests.

   b. The collection, field preparation and storage of field samples and test specimens shall be performed by the Contractor as required by the Specifications and as directed by the City.

5. Supplementary and Other Testing

   a. Nothing shall restrict the Contractor from conducting tests he may require. Should the Contractor at any time request the City to consider such test results, the test reports shall be certified by an independent testing laboratory acceptable to the City. Testing of this nature shall be conducted at no additional cost to the City.

1.02 OBSERVATION AT PLACE OF MANUFACTURE

A. Unless otherwise specified, all products, materials, and time and equipment shall be subject to observation by the Engineer at the place of manufacture.

B. The presence of the Engineer at the place of manufacture, however, shall not relieve the Contractor of the responsibility for furnishing products, materials, and equipment which comply with all requirements of the Contract Documents. Compliance is a duty of the Contractor and said duty shall not be avoided by any act or omission on the part of the Engineer.

1.03 SAMPLING AND TESTING

A. Unless otherwise specified, all sampling and testing shall be in accordance with the methods prescribed in the current standards of the ASTM, as applicable to the class and nature of the article or materials considered; however, the City reserves the right to use any generally-accepted system of sampling and testing which, in the opinion of the Engineer, will ensure the City that the quality of the work is in full accord with the Contract Documents.

B. Any waiver by the City of any specific testing or other quality assurance measures, whether or not such waiver is accompanied by a guarantee of substantial performance as a relief from the specified testing or other quality assurance requirements as originally specified, and whether or not such guarantee is accompanied by a performance bond to assure execution of any necessary corrective or remedial Work, shall not be construed as a waiver of any requirements of the Contract Documents.

C. Notwithstanding the existence of such waiver, the Engineer reserves the right to make independent investigations and tests and failure of any portion of the Work to meet any of the requirements of the Contract Documents, shall be reasonable cause for the Engineer to require the removal or correction and reconstruction of any such Work in accordance with the General Conditions.

D. Materials to be tested include, but are not necessarily limited to the following:

1. cement,
2. concrete aggregate,
3. concrete,
4. bituminous paving materials,
5. structural and reinforcing steel,
6. waterproofing,
7. select backfill, subgrade, base material, crushed stone or gravel and sand,
8. water during pipeline disinfection and bacteriological testing

1.04 SITE INVESTIGATION AND CONTROL

A. The Contractor shall verify all dimensions in the field and shall check field conditions continuously during construction. The Contractor shall be solely responsible for any inaccuracies built into the Work due to its failure to comply with this requirement.

B. The Contractor shall inspect related and appurtenant Work and shall report in writing to the Engineer any conditions which will prevent proper completion of the Work. Failure to report any such conditions shall constitute acceptance of all site conditions, and any required removal, repair, or replacement caused by unsuitable conditions shall be performed by the Contractor within the scope of the Project.

1.05 OBSERVATION AND TESTING

A. The work or actions of the testing laboratory shall in no way relieve the Contractor of its obligations under the Contract. The laboratory testing work will include such observations and testing required by the Contract Documents, existing laws, codes, ordinances, etc. The testing laboratory will have no authority to change the requirements of the Contract Documents, nor perform, accept or approve any of the Contractor's Work.

B. The Contractor shall allow the Engineer ample time and opportunity for field observation and testing materials and equipment to be used in the Work. The Contractor shall advise the Engineer promptly upon placing orders for materials and equipment so that arrangements may be made, if desired, for observation before shipment from the place of manufacture. The Contractor shall at all times furnish the Engineer and its representatives, facilities including labor, and allow proper time for inspecting and testing materials, equipment, and installation. The Contractor must anticipate that possible delays may occur in the execution of its work due to the necessity of materials and equipment being inspected and accepted for use. The Contractor shall furnish, at its own expense, all samples of materials required by the Engineer for testing, and shall make its own arrangements for providing water, electric power, or fuel for the various observations and tests of structures and equipment.

C. The Contractor shall furnish the services of representatives of the manufacturers of certain equipment, as prescribed in other Sections of the Specifications. The Contractor shall also place his orders for such equipment on the basis that, after the equipment has been tested prior to final acceptance of the work, the manufacturer will furnish the City with certified statements that the equipment has been installed properly and is ready to be placed in functional operation. Tests and analyses required of equipment shall be paid for by the Contractor, unless specified otherwise in the Section which covers a particular piece of equipment.

D. Where other tests or analyses are specifically required in other Sections of these Specifications, the cost thereof shall be borne by the party (City or Contractor) so

designated in such Sections. The City will bear the cost of all tests, observations, or investigations undertaken by the order of the Engineer for the purpose of determining conformance with the Contract Documents if such tests, observations, or investigations are not specifically required by the Contract Documents, and if conformance is ascertained thereby. Whenever nonconformance is determined by the Engineer as a result of such tests, observations, or investigations, the Contractor shall bear the full cost thereof or shall reimburse the City for said cost. In this connection, the cost of any additional tests and investigations, which are ordered by the Engineer to ascertain subsequent conformance with the Contract Documents, shall be borne by the Contractor.

E. Significance of Tests

1. Test results shall be binding on both the Contractor and the City, and shall be considered irrefutable evidence of compliance or noncompliance with the Specification requirements, unless supplementary testing shall prove, to the satisfaction of the City, that the initial samples were not representative of actual conditions.

F. Supplementary and Other Testing

1. Nothing shall restrict the Contractor from conducting tests he may require. Should the Contractor at any time request the City to consider such test results, the test reports shall be certified by an independent testing laboratory acceptable to the City. Testing of this nature shall be conducted at the Contractor's expense.

1.06 RIGHT OF REJECTION, IMPERFECT WORK, EQUIPMENT, OR MATERIALS

A. The Engineer, acting for the City, shall have the right, at all times and places, to reject any articles or materials to be furnished hereunder which, in any respect, fail to meet the requirements of the Contract Documents, regardless of whether the defects in such articles or materials are detected at the point of manufacture or after completion of the Work at the site, or during the subsequent guarantee period. If the Engineer or its representative, through an oversight or otherwise, has accepted materials or Work which is defective, or which is contrary to the Contract Documents, such materials, no matter in what stage or condition of manufacture, delivery, or erection, may be subsequently rejected by the Engineer for the City. Any defective or imperfect work, equipment, or materials furnished by the Contractor which is discovered shall be removed immediately even though it may have been overlooked by the Engineer and estimated for payment. Satisfactory work or materials shall be substituted for that rejected.

B. The Contractor shall promptly remove rejected articles or materials from the site of the Work after notification of rejection. All costs of removal and replacement of rejected articles or materials as specified herein shall be borne by the Contractor.

C. The Engineer may order tests of imperfect or damaged work, equipment, or materials to determine the required functional capability for possible acceptance, if there is no other reason for rejection. The cost of such tests shall be borne by the Contractor; and the

nature, tester, extent and supervision of the tests will be as determined by the Engineer. If the results of the tests indicate that the required functional capability of the work, equipment, or material was not impaired, consistent with the final general appearance of same, the work, equipment, or materials may be deemed acceptable. If the results of such tests reveal that the required functional capability of the questionable work, equipment, or materials has been impaired, then such work, equipment, or materials shall be deemed imperfect and shall be replaced. The Contractor may elect to replace the imperfect work, equipment, or material in lieu of performing the tests.

1.07 OTHER CONSTRUCTION CONSIDERATIONS

A. Sleeves and Openings: The Contractor shall provide all openings, chases, etc., to fit its own work and that of any other subcontractors and Contractor's. All such openings or chases shown on the Contract Drawings, or reasonably implied thereby, or as confirmed or modified by acceptable shop, setting or erecting drawings, shall be provided by the Contractor.

B. Where pipes or conduits are to pass through slabs or walls, or where equipment frames or supports are to be installed as integral part of an opening, the sleeves, openings, forms or frames shall be furnished by the installer of the pipes, conduits or equipment, but shall be placed by the Contractor. Where hanger inserts, anchor bolts and similar items are to be embedded in concrete as an integral part of a slab or wall, they shall be furnished by the installer of the pipe or other equipment requiring the hanger, etc., but shall be placed by the Contractor.

C. Weather Conditions: Work that may be affected by inclement weather shall be suspended until proper conditions prevail. In the event of impending storms, the Contractor shall take necessary precautions to protect all work, materials and equipment from exposure.

D. Fire Protection: The Contractor shall take all necessary precautions to prevent fires at or adjacent to the Work, including its own buildings and trailers. Adequate fire extinguisher and hose line stations shall be provided throughout the work area.

PART 2 – PRODUCTS

(NOT USED)

PART 3 – EXECUTION

3.01 BUOYANCY

A. The Contractor shall be completely responsible for any tanks, pipelines, utility access, foundations or similar improvements that may become buoyant during the construction operations due to groundwater levels. Should there be any possibility of buoyancy, the

Contractor shall take the necessary steps to prevent damage due to floating or flooding and shall repair or replace said improvements at no additional cost to the City.

- END OF SECTION -

SECTION 01510

TEMPORARY UTILITIES

PART 1 -- GENERAL

1.01 THE REQUIREMENT

A. It shall be the CONTRACTOR's responsibility to provide equipment that is adequate for the performance of the Work under this Contract within the time specified. All equipment shall be kept in satisfactory operating condition, shall be capable of safely and efficiently performing the required Work, and shall be subject to review by the City's representative at any time within the duration of the Contract. All Work hereunder shall conform to the applicable requirements of the OSHA Standards for Construction.

B. The CONTRACTOR shall provide for utilities and services for its own operations. The CONTRACTOR shall furnish, install and maintain all temporary utilities during the contract period including removal upon completion of the Work.

1.02 POWER AND LIGHTING

A. Power: The CONTRACTOR shall provide all necessary power required for its operations under the Contract, and shall provide and maintain all temporary power lines required to perform the Work in a safe and satisfactory manner.

B. Construction Lighting: All Work conducted at night or under conditions of deficient daylight shall be suitably lighted to ensure proper Work and to afford adequate facilities for inspection and safe working conditions. Temporary lighting shall be maintained during nonworking periods if the area is subject to access by the public or City's personnel.

C. Electrical Connections: All temporary connections for electricity shall be subject to review by the ENGINEER and the power company representative, and shall be removed in like manner at the CONTRACTOR's expense prior to final acceptance of the Work.

D. Separation of Circuits: Unless otherwise permitted by the ENGINEER, circuits separate from lighting circuits shall be used for all power purposes.

E. Construction Wiring: All wiring for temporary electric light and power shall be properly installed and maintained and shall be securely fastened in place. All electrical facilities shall conform to the requirements of Subpart K of the OSHA Safety and Health Standards for Construction.

1.03 WATER SUPPLY

A. General: Except as noted otherwise, the CONTRACTOR shall make arrangements for and pay for all costs for all water used during construction including general construction

used, testing, CONTRACTOR's trailer and ENGINEER's trailer. The CONTRACTOR shall provide and maintain all piping, fittings, adapters, and valving as may be required.

B. If a temporary connection is made to a potable water system on-site (e.g., a fire hydrant), the CONTRACTOR must install a back flow prevention device and a meter, obtained from the City. The CONTRACTOR shall provide temporary piping for the metering and use of potable water. The cost of the water for the testing will be charged to the CONTRACTOR at the standard City rates including deposits, monthly charges and usage charges.

C. Water Connections: The CONTRACTOR shall not make connection to, or draw water from, any fire hydrant or pipeline without first obtaining permission of the authority having jurisdiction over the use of said fire hydrant or pipeline and from the agency owning the affected water system. For each such connection made, the CONTRACTOR shall first attach to the fire hydrant or pipeline a valve and a meter, if required by the said authority, of a size and type acceptable to said authority and agency.

D. Removal of Water Connections: Before final acceptance of the Work on the project, all temporary connections and piping installed by the CONTRACTOR shall be entirely removed, and all affected improvements shall be restored to their original condition, or better, to the satisfaction of the ENGINEER and to the agency owning the affected utility.

E. Fire Protection: The construction, and all other parts of the Work shall be connected with the CONTRACTOR's water supply system and shall be adequately protected against damage by fire. Hose connections and hose, water casks, chemical equipment, or other sufficient means shall be provided for fighting fires in the temporary structures and other portions of the Work, and responsible persons shall be designated and instructed in the operation of such fire apparatus so as to prevent or minimize the hazard of fire. The CONTRACTOR's fire protection program shall conform to the requirements of Subpart F of the OSHA Standards for Construction and all local Fire Department Requirements.

1.04 TEMPORARY SANITARY FACILITIES

A. The CONTRACTOR shall provide and maintain adequate and clean sanitary facilities for the construction work force and visitors. The facilities shall comply with local codes and regulations and be situated in an acceptable location.

1.05 CONFINED SPACES

A. The CONTRACTOR shall provide and maintain a safe working environment in confined spaces. The CONTRACTOR shall follow the applicable requirements of the OSHA Standards for Construction and NIOSH Publications for working in confined spaces.

1.06 TEMPORARY VENTILATION

A. The CONTRACTOR shall provide and maintain adequate ventilation for a safe working environment. In addition, forced air ventilation shall be provided for the curing of installed

materials, humidity control and the prevention of hazardous accumulations of dust, gases or vapors.

PART 2 -- PRODUCTS

(NOT USED)

PART 3 -- EXECUTION

(NOT USED)

- END OF SECTION -

SECTION 01520

CONSTRUCTION CONSTRAINTS

PART 1 – GENERAL

1.01 THE REQUIREMENT

A. The intent of this Section is to outline the minimum requirements necessary to provide continuous public services throughout the construction period.

B. Work under the Contract shall be scheduled and performed in such a manner as to result in the least possible disruption to the operation of existing water, wastewater, and stormwater transmission facilities and nearby residents.

C. The Contractor has the option of providing additional temporary facilities that can eliminate a constraint, provided it is done without cost to the City (including additional City labor) and provided that all requirements of these Specifications are fulfilled. Work not specifically covered in the following paragraphs may, in general, be done at any time during the contract period, subject to the operating requirements and constraints and construction requirements outlined hereinafter. All references to days in this Section shall be consecutive calendar days.

1.02 CONNECTION OF EXISTING SYSTEMS

A. All connections to existing systems shall be performed in such a manner that no damage and minimal interruption is caused to the existing installation. Any damage caused to existing installations shall be repaired or replaced by the Contractor at no additional cost to the City.

B. The Contractor shall note that some of the work in this Contract will require the Contractor to connect to existing pipelines and structures. The Contractor shall be responsible for the proper containment and disposal of wastewater, or other materials drained from existing pipelines and structures during construction, unless otherwise specifically noted to be performed by the City.

C. The Contractor shall contain such wastewater or other materials (in accordance with all applicable codes) and shall dispose of such within the existing collection system as approved by the City. The Contractor shall be responsible for the prevention of wastewater or other materials spills within the Work.

1.03 OPERATION REQUIREMENTS

A. Coordination with Private Property Owners: Stormwater work is located within the River Oaks Stormwater Preserve. Work is also adjacent to private residences and public access areas. The Contractor shall coordinate work with the City and shall minimize impacts to private property owners and public access areas. Contractor shall replace surrounding ground affected including but not limited to pavers, sidewalks, sod, landscape and bring it to original or better conditions.

B. Sequence of certain major events and identification of time constraints for removing existing facilities from active service and installation of new facilities are described below. No phase of work (or tasks within a phase) shall preclude or be performed in parallel with a subsequent phase unless specifically defined so in these documents. In all cases, work in each phase shall be checked out an accepted for satisfactory use, subject to the City's approval, prior to the Contractor proceeding to the next phase of construction.

C. Critical events in the sequence of construction are specified herein. The outlined sequence of construction does not include all items necessary to complete the Work, but is intended to identify the sequence of critical events necessary to eliminate disruption to the public and to the City's facilities. It shall be understood by the Contractor that the critical events identified are not all inclusive and that additional items of work not shown may be required. The sequence of construction is a precedence requirement and does not attempt to schedule the Contractor's work.

1.03 SEQUENCE OF CONSTRUCTION

A. Mobilization / Site Preparation

1. Mobilize for work – video Preserve, swales and adjacent area, obtain permits, develop and submit construction schedule, submit shop drawing schedule and being shop drawing submittals and procurement of materials.

2. For interfering utilities, construct new utilities up to tie-in points, perform tests, make final connections with minimum amount of shut down time. After acceptance of new utilities, remove existing interfering underground utilities and structures. Provide temporary services as required to maintain continuous operation.

B. Detailed Construction

1. Project Notification shall be performed in accordance with the requirements of Section 01580.

2. The Contractor shall be responsible for all damages/claims resulting from its activities on the surrounding neighborhood and its residents.

C. Final Site Work and Closeout

1. Final grading, paving, sodding, landscaping, miscellaneous work, demobilization and related closeout activities shall be as defined elsewhere in the Contract Documents.

1.04 CONTRUCTION CONSTRAINTS

A. Construction Dewatering

1. All dewatering equipment such as pumps, air compressors, generators, etc. proposed for use during construction in residential areas shall be provided with noise enclosures suitable to meet the requirements of the City of Fort Lauderdale Noise Ordinance.

2. The Contractor is responsible for draining and dewatering all existing utilities impacted by the work as required to complete the relocation, demolition, bypass, or tie-in connections. Contractor is responsible for disposal of the contents of each line.

3. Additional requirements for construction dewatering are defined on the Drawings.

B. Maintenance of Existing Facilities

1. It may be necessary to interrupt the operation of the existing water and/or sewer system. In all cases where the Contractor must cause an interruption, the Contractor shall prepare and submit to the Engineer seven (7) working days prior to commencing work, a complete description of the proposed procedure and a guaranteed time schedule. At least 24 hours prior to the time proposed for starting the Work, the Contractor will be notified by the Engineer whether or not the Work will be permitted as proposed.

2. The Engineer reserves the right to require the Contractor to work 24 hours per day in all cases where interference with operation of the system may result in dangerous health hazards or offensive conditions.

3. In no case will the Contractor be permitted to interfere with the existing system until all materials, supplies, equipment, tools and incidentals necessary to complete the work are on site. Backup equipment and/or materials on key items shall be required on work necessitating interference with the existing system.

4. The Contractor shall be responsible for draining and dewatering existing utilities as required to complete tie-in activities. The Contractor is responsible for the disposal of contents of the line(s) in accordance with all federal, state, and local regulations.

5. Proposed pre-existing utility demolition work shall be coordinated with the City and approvals procured before commencing work. In this effort, it is noted that certain utility relocations must be in place and functional before demolitions may be executed. To this end, the Contractor shall include in the bid price any and all costs associated with installation of relocated utilities as needed to address preexisting conditions and maintain facility operations on the project as necessary.

PART 2 – PRODUCTS

(NOT USED)

PART 3 – EXECUTION

3.01 COORDINATION WITH EXISTING UTILITIES AND OTHER AGENCIES

A. The Contractor shall notify all utilities in writing with a copy to the City/Engineer prior to construction commencement. The Contractor shall cooperate with these utility owners as necessary to minimize service interruptions.

- END OF SECTION -

SECTION 01530

PROTECTION OF EXISTING FACILITIES

PART 1 – GENERAL

1.01 THE REQUIREMENT

A. The Contractor shall be responsible for the preservation and protection of property adjacent to the work site against damage or injury as a result of its operations under this Contract. Any damage or injury occurring on account of any act, omission or neglect on the part of the Contractor shall be restored in a proper and satisfactory manner or replaced by and at the expense of the Contractor to an equal or superior condition than previously existed.

B. The Contractor shall comply promptly with such safety regulations as may be prescribed by the City or the local authorities having jurisdiction and shall, when so directed, properly correct any unsafe conditions created by, or unsafe practices on the part of, its employees. In the event of the Contractor's failure to comply, the City may take the necessary measures to correct the conditions or practices complained of, and all costs thereof will be deducted from any monies due the Contractor. Failure of the Engineer to direct the correction of unsafe conditions or practices shall not relieve the Contractor of its responsibility hereunder.

C. In the event of any claims for damage or alleged damage to property as a result of work under this Contract, the Contractor shall be responsible for all costs in connection with the settlement of or defense against such claims. Prior to commencement of work in the vicinity of property adjacent to the work site, the Contractor, at its own expense, shall take such surveys as may be necessary to establish the existing condition of the property. Before final payment can be made, the Contractor shall furnish satisfactory evidence that all claims for damage have been legally settled or sufficient funds to cover such claims have been placed in escrow, or that an adequate bond to cover such claims has been obtained.

1.02 PROTECTION OF WORK AND MATERIAL

A. During the progress of the work and up to the date of final payment, the Contractor shall be solely responsible for the care and protection of all work and materials covered by the Contract.

B. All work and materials shall be protected against damage, injury or loss from any cause whatsoever, and the Contractor shall make good any such damage or loss at its own expense. Protection measures shall be subject to the approval of the Engineer.

1.03 BARRICADES, WARNING SIGNS AND LIGHTS

A. The Contractor shall provide, erect and maintain as necessary, strong and suitable barricades, danger signs and warning lights along all roads accessible to the public, as required by the authority having jurisdiction, to ensure safety to the public. All barricades and obstructions along public roads shall be illuminated at night and all lights for this purpose shall be kept burning from sunset to sunrise.

B. Each Contractor shall provide and maintain such other warning signs and barricades in areas of and around their respective work as may be required for the safety of all those employed in the work, City operating personnel, or those visiting the site.

1.04 TEMPORARY BRIDGES

A. Construct temporary bridges at all points where maintenance of traffic across pipeline construction is necessary.

B. Make bridges over public streets, roads, and highways acceptable to authority having jurisdiction thereover.

C. Bridges erected over private roads and driveways shall be adequate for service to which they will be subjected.

D. Provide substantial guardrails and suitably protected approaches.

E. Provide foot bridges not less than 4 feet wide with handrails and uprights of dressed lumber.

F. Maintain bridges in place as long as conditions of the Work require their use for safety of public, except that when necessary for proper prosecution of the Work in immediate vicinity of bridge. Bridge may be relocated or temporarily removed for such period as Engineer may permit.

1.05 EXISTING UTILITIES AND STRUCTURES

A. The term existing utilities shall be deemed to refer to both publicly owned and privately-owned utilities such as electric power and lighting, telephone, water, gas, storm drains, process lines, sanitary sewers and all appurtenant structures.

B. Where existing utilities and structures are indicated on the Drawings, it shall be understood that all of the existing utilities and structures affecting the work may not be shown and that the locations of those shown are approximate only. It shall be the responsibility of the Contractor to ascertain the actual extent and exact location of existing utilities and structures. In every instance, the Contractor shall notify the proper authority having jurisdiction and obtain all necessary directions and approvals before performing any work in the vicinity of existing utilities.

C. Prior to beginning any excavation work, the Contractor shall, through field investigations, determine any conflicts or interferences between existing utilities and new utilities to be constructed under this project. This determination shall be based on the actual locations, elevations, slopes, etc., of existing utilities as determined in the field investigations, and locations, elevation, slope, etc. of new utilities as shown on the Drawings. If interference exists, the Contractor shall bring it to the attention of the Engineer as soon as possible. If the Engineer agrees that interference exists, it shall modify the design as required.

D. Additional costs to the Contractor for this change shall be processed through a Change Order as detailed elsewhere in these Contract Documents. In the event the Contractor fails to bring a potential conflict or interference to the attention of the Engineer prior to beginning excavation work, any actual conflict or interference which does arise during the Project shall be corrected by the Contractor, as directed by the Engineer, at no additional expense to the City.

E. The work shall be carried out in a manner to prevent disruption of existing services and to avoid damage to the existing utilities. Temporary connections shall be provided, as required, to insure uninterrupted existing services. Any damage resulting from the work of this Contract shall be promptly repaired by the Contractor at its own expense in a manner

approved by the Engineer and further subject to the requirements of any authority having jurisdiction. Where it is required by the authority having jurisdiction that they perform their own repairs or have them done by others, the Contractor shall be responsible for all costs thereof.

F. Where excavations by the Contractor require any utility lines or appurtenant structures to be temporarily supported and otherwise protected during the construction work, such support and protection shall be provided by the Contractor. All such work shall be performed in a manner satisfactory to the Engineer and the respective authority having jurisdiction over such work. In the event the Contractor fails to provide proper support or protection to any existing utility, the Engineer may, at its discretion, have the respective authority to provide such support or protection as may be necessary to insure the safety of such utility, and the costs of such measures shall be paid by the Contractor.

G. Protection of existing utilities, structures and other facilities: The underground pipes, utilities and structures shown on the Plans are located according to the best information available but may vary by several feet from both the position and elevation shown. The Contractor shall explore far enough ahead of its work to determine the exact location and condition of such utilities, structures or facilities so that, before the Work is installed, the Engineer may change the line or grade of the pipe or other facility, should that become necessary to avoid a conflict. Should this exploration reveal that adjustments to the work are necessary; the Contractor shall immediately notify the Engineer and coordinate with him to adjust the work in a timely fashion avoiding delays to construction. No request for additional compensation or Contract time (except for a non-compensable time extension at the sole discretion of the Engineer, whose decision shall be final) resulting from encountering utilities or structures not shown, or differing in location or elevation from that shown, will be considered. The Contractor shall explore sufficiently ahead of the Work to allow time for any necessary adjustment without delay occasioned by encountering underground utilities or structures which could have or should have been discovered by timely exploration ahead of the Work shall rest solely with the Contractor.

H. Relocation of existing utilities: The relocation of existing utilities, as noted on the Plans, or for the convenience of the Contractor shall be the responsibility of the Contractor. This work shall be completed by either the forces of the existing utility or the Contractor's forces at the discretion of the responsible utility. If the work is to be performed by the Contractor, all work shall be done in accordance with the utility company's requirements. Under no circumstances shall the Contractor be authorized extra payment for this work, and all cost for the relocation shall be the responsibility of the Contractor.

I. Any conflicts between the field investigation and the information shown on the Plans shall be brought to the immediate attention of the Engineer

1.06 TREES WITHIN PROJECT LIMITS

A. General: The Contractor shall exercise all necessary precautions so as not to damage or destroy any trees on the project site, and shall not trim or remove any trees unless such trees have been approved for trimming or removal by the jurisdictional agency or City. All existing trees which are damaged during construction shall be replaced by the Contractor or a certified tree company to the satisfaction of the City.

B. Replacement: The Contractor shall immediately notify the City if any tree is damaged by the Contractor's operations. If, in the opinion of the City, the damage is such that replacement

is necessary, the Contractor shall replace the tree at its own expense. The tree shall be of a like size and variety as the tree damaged, or, if of a smaller size, the Contractor shall pay to the City compensatory payment acceptable to the City.

1.07 NOTIFICATION BY THE CONTRACTOR

A. Prior to any excavation in the vicinity of any existing underground facilities, including all water, sewer, storm drain, gas, petroleum products, or other pipelines; all buried electric power, communications, or television cables; all traffic signal and street lighting facilities; and all roadway and state highway rights-of-way the Contractor shall notify the respective authorities representing the owners or agencies responsible for such facilities not less than three days nor more than seven days prior to excavation.

1.08 DETOURS

A. Where authority having jurisdiction requires that traffic be maintained over construction work in a public street, road, or highway, and traffic cannot be maintained on original roadbed or pavement, construct and maintain detour around the Work. Coordinate traffic routing with that of others working in same or adjacent areas.

1.09 RESTORATION OF PAVEMENT

A. General: All paved areas including asphaltic concrete berms cut or damaged during construction shall be replaced with similar materials and of equal thickness to match the existing adjacent undisturbed areas, except where specific resurfacing requirements have been called for in the Contract Documents. All pavements which are subject to partial removal shall be neatly saw cut in straight lines.

B. Temporary Resurfacing: Wherever required by the public authorities having jurisdiction, the Contractor shall place temporary surfacing, signage, striping and/or other traffic controls as required, promptly after backfilling and shall maintain such surfacing for the period of time fixed by said authorities before proceeding with the final restoration of improvements.

C. Permanent Resurfacing: In order to obtain a satisfactory junction with adjacent surfaces, the Contractor shall saw cut back and trim the edge so as to provide a clean, sound, vertical joint before permanent replacement of an excavated or damaged portion of pavement. Damaged edges of pavement along excavations and elsewhere shall be trimmed back by saw cutting in straight lines. All pavement restoration and other facilities restoration shall be constructed to finish grades compatible with adjacent undisturbed pavement.

PART 2 – PRODUCTS

(NOT USED)

PART 3 – EXECUTION

(NOT USED)

- END OF SECTION -

SECTION 01550

SITE ACCESS AND STORAGE

PART 1 - GENERAL

1.01 HIGHWAY LIMITATIONS

A. The CONTRACTOR shall make its own investigation of the condition of available public and private roads and of clearances, restrictions, bridge load limits, and other limitations affecting transportation and ingress and egress to the site of the WORK. It shall be the CONTRACTOR's responsibility to construct and maintain any haul roads required for its construction operations.

1.02 TEMPORARY CROSSINGS

A. General: Continuous, unobstructed, safe, and adequate pedestrian and vehicular access shall be provided to fire hydrants, commercial and industrial establishments, churches, schools, parking lots, service stations, motels, fire and police stations, and hospitals. Safe and adequate public transportation stops and pedestrian crossings at intervals not exceeding 300 feet shall be provided. The CONTRACTOR shall cooperate with parties involved in the delivery of mail and removal of trash and garbage so as to maintain existing schedules for such services. Vehicular access to residential driveways shall be maintained to the property line except when necessary construction precludes such access for reasonable periods of time.

B. Emergency Access and Security: In order to provide protection to the workers and residents, the CONTRACTOR shall maintain emergency access to all adjacent properties at all times during construction. If a road is required to be closed to vehicular traffic and the distance of the closure exceeds 150 feet between stabilized surfaces, or prevents access to properties for a distance that exceeds 150 feet, the CONTRACTOR shall provide a 10 foot wide stabilized accessway on one side of the trench capable of supporting a Fire Truck. CONTRACTOR shall also provide stabilized accessways across the trench or unstabilized area a minimum of 6 feet in width at a spacing not to exceed 100 feet capable of supporting foot traffic. These accessways shall be protected and delineated with lighted barricades or other such devices as approved by the regulatory agency. Both ends of the emergency accessway shall be blocked in accordance with the MOT permit approved by City with signage indicating that this accessway is to be used by emergency vehicles only.

C. No trenches or holes shall be left open after working hours. In the event a trench must be left open after hours, it shall be done so only with the express written permission from the ENGINEER, and it shall be the CONTRACTOR's responsibility to provide proper protection of the open trench or hole as required by the regulatory agency. The CONTRACTOR shall maintain trench safety and comply with current OSHA regulations and the Trench Safety Act. The CONTRACTOR shall maintain and keep all safety barricades, signage, flashers, and detours, in operating condition. A copy of the approved MOT plans, and details, shall be on site at all times.

D. Temporary Bridges: Wherever necessary, the CONTRACTOR shall provide suitable temporary bridges or steel plates over unfilled excavations, except in such cases as the

CONTRACTOR shall secure the written consent of the individuals or authorities concerned to omit such temporary bridges or steel plates, which written consent shall be delivered to the ENGINEER prior to excavation. All such bridges or steel plates shall be maintained in service until access is provided across the backfilled excavation. Temporary bridges or steel plates for street and highway crossing shall conform to the requirements of the authority having jurisdiction in each case, and the CONTRACTOR shall adopt designs furnished by said authority for such bridges or steel plates, or shall submit designs to said authority for approval, as may be required.

E. Street Use: Nothing herein shall be construed to entitle the CONTRACTOR to the exclusive use of any public street, alleyway, or parking area during the performance of the WORK hereunder, and it shall so conduct its operations as not to interfere unnecessarily with the authorized WORK of utility companies or other agencies in such streets, alleyways, or parking areas. No street shall be closed to the public without first obtaining permission of the ENGINEER and proper governmental authority. Where excavation is being performed in primary streets or highways, one lane in each direction shall be kept open to traffic at all times unless otherwise indicated. Toe boards shall be provided to retain excavated material if required by the ENGINEER or the agency having jurisdiction over the street or highway. Fire hydrants on or adjacent to the WORK shall be kept accessible to fire-fighting equipment at all times. Temporary provisions shall be made by the CONTRACTOR to assure the use of sidewalks and the proper functioning of all gutters, storm drain inlets, and other drainage facilities.

F. Traffic Control: For the protection of traffic in public or private streets and ways, the CONTRACTOR shall provide, place, and maintain all necessary barricades, traffic cones, warning signs, lights, and other safety devices in accordance with the requirements of City and the "Manual of Uniform Traffic Control Devices, Part VI - Traffic Controls for Street and Highway Construction and Maintenance Operations," published by U.S. Department of Transportation, Federal Highway Administration (ANSI D6.1).

G. The CONTRACTOR shall take all necessary precautions for the protection of the WORK and the safety of the public. All barricades and obstructions shall be illuminated at night, and all lights shall be kept burning from sunset until sunrise. The CONTRACTOR shall station such guards or flaggers and shall conform to such special safety regulations relating to traffic control as may be required by the public authorities within their respective jurisdictions. All signs, signals, and barricades shall conform to the requirements of the Florida Department of Transportation.

H. The CONTRACTOR shall remove traffic control devices when no longer needed, repair all damage caused by installation of the devices, and shall remove post settings and backfill the resulting holes to match grade.

I. Temporary Driveway Closure: The CONTRACTOR shall notify the CITY of the closure of the driveways to be closed more than one eight-hour work day at least 2 weeks prior to the closure. The CONTRACTOR shall minimize the inconvenience and minimize the time period that the driveways will be closed. The CONTRACTOR shall fully explain to the CITY/occupant how long the WORK will take and when closure is to start.

1.03 CONTRACTOR'S WORK AND STORAGE AREA

A. The CONTRACTOR shall designate and arrange for the use of a portion of property, adjacent to the WORK for its exclusive use during the term of the Contract as a storage and shop area for its construction operations relative to this Contract. This shall include but not be limited to interim storage of suitable materials for fill or backfill. Storage areas

shall be fenced for the safety of the surrounding neighborhood.

B. The CONTRACTOR shall make its own arrangements for any necessary off-site storage or shop areas necessary for the proper execution of the WORK. This shall include but not be limited to interim storage of suitable materials for fill or backfill.

C. The CONTRACTOR shall construct and use a separate storage area for hazardous materials used in constructing the WORK.

1. For the purpose of this paragraph, hazardous materials to be stored in the separate area are all products labeled with any of the following terms: Warning, Caution, Poisonous, Toxic, Flammable, Corrosive, Reactive, or Explosive. In addition, whether or not so labeled, the following materials shall be stored in the separate area: diesel fuel, gasoline, new and used motor oil, hydraulic fluid, cement, paints and paint thinners, two-part epoxy coatings, sealants, asphaltic products, glues, solvents, wood preservatives, sand blast materials, and spill absorbent.

2. Hazardous materials shall be stored in groupings according to the Material Safety Data Sheets.

3. The CONTRACTOR shall develop and submit to the ENGINEER a plan for storing and disposing of the materials above.

4. The CONTRACTOR shall obtain and submit to the ENGINEER a single EPA number for wastes generated at the site.

5. The separate storage area shall meet all the requirements of all authorities having jurisdiction over the storage of hazardous materials.

6. All hazardous materials which are delivered in containers shall be stored in the original containers until use. Hazardous materials which are delivered in bulk shall be stored in containers which meet the requirements of authorities having jurisdiction.

PART 2 - PRODUCTS (NOT USED)

PART 3 - EXECUTION (NOT USED)

- END OF SECTION -

SECTION 01560

TEMPORARY ENVIRONMENTAL CONTROLS

PART 1 – GENERAL

1.01 EXPLOSIVES AND BLASTING

A. The use of explosives on the Work will not be permitted.

1.02 DUST ABATEMENT

A. The Contractor shall furnish all labor, equipment, and means required and shall carry out effective measures wherever and as often as necessary (as determined by the Engineer) to prevent its operation from producing dust in amounts damaging to property, cultivated vegetation, or domestic animals, or causing a nuisance to persons living in or occupying buildings in the vicinity. The Contractor shall be responsible for any damage resulting from any dust originating from its operations. The dust abatement measures shall be continued until the Contractor is relieved of further responsibility by the Engineer. No separate payment will be allowed for dust abatement measures and all costs thereof shall be included in the Contractor's bid price.

1.03 RUBBISH CONTROL

A. During the progress of the Work, the Contractor shall keep the site of the Work and other areas used by it in a neat and clean condition, and free from any accumulation of rubbish. The Contractor shall dispose of all rubbish and waste materials of any nature occurring at the Work site and shall establish regular intervals of collection and disposal of such materials and waste. The Contractor shall also keep its haul roads free from dirt, rubbish, and unnecessary obstructions resulting from its operations. Disposal of all rubbish and surplus materials shall be off the site of construction in accordance with local codes and ordinances governing locations and methods of disposal, and in conformance with all applicable safety laws, and to the particular requirements of Part 1926 of the OSHA Safety and Health Standards for Construction.

1.04 SANITATION

A. Toilet Facilities: Fixed or portable chemical toilets shall be provided wherever needed for the use of employees. Toilets at construction job sites shall conform to the requirements of Part 1926 of the OSHA Standards for Construction.

B. Such facilities shall be made available when the first employees arrive on the Work, shall be properly secluded from public observation, and shall be constructed and maintained in suitable numbers and at such points and in such manner as may be required.

C. The Contractor shall maintain the sanitary facilities in a satisfactory and sanitary condition at all times and shall enforce their use. It shall rigorously prohibit the committing of nuisances on the site of the Work, on the lands of the City, or on adjacent property.

D. The City and the Engineer shall have the right to inspect any building or other facility erected, maintained, or used by the Contractor, to determine whether or not the sanitary regulations have been complied with.

E. Sanitary and Other Organic Wastes: The Contractor shall establish a regular daily collection of all sanitary and organic wastes. All wastes and refuse from sanitary facilities provided by the Contractor or organic material wastes from any other source related to the Contractor's operations shall be disposed of away from the site in a manner satisfactory to the Engineer and in accordance with all laws and regulations pertaining thereto.

1.05 CHEMICALS

A. All chemicals used during project construction or furnished for project operation, whether defoliant, soil sterilant, herbicide, pesticide, disinfectant, polymer, paint, fuel, solvent or reactant of other classification, shall show approval of either the U.S. Environmental Protection Agency or the U.S. Department of Agriculture. The handling, storage, use and disposal of all such chemicals and disposal of residues shall be in strict accordance with all applicable rules and regulations of Federal, State and local jurisdictional agencies and the printed instructions of the manufacturer and all regulatory requirements. Copies of antidote literature shall be kept at the storage site and at the Contractor's job site office. A supply of antidotes shall be kept at the Contractor's office.

1.06 NOISE CONTROL

A. Noise resulting from the Contractor's work shall not exceed the noise levels and other requirements stated in local ordinances. The Contractor shall be responsible for curtailing noise resulting from its operation. It shall, upon written notification from the Engineer or noise control officers, make any repairs, replacements, adjustments, additions and furnish mufflers when necessary to fulfill requirements.

1.07 EROSION ABATEMENT AND WATER POLLUTION

A. It is imperative that any Contractor dewatering operation not contaminate or disturb the environment of the properties adjacent to the Work. The Contractor shall, therefore, schedule and control its operations to confine all runoff water from disturbed surfaces, water from dewatering operations that becomes contaminated with silt, muck and other deleterious matter, fuels, oils, bitumens, calcium chloride, chemicals and other polluting materials.

B. The Contractor shall construct temporary silting basin(s) of adequate size and provide all necessary temporary materials, operations and controls including, but not limited to, filters, coagulants, screens, and other means necessary to attain the required discharge water quality.

C. The Contractor shall comply with the requirements of the section entitled “Erosion and Sedimentation Control – Stormwater Pollution Prevention”.

D. The Contractor shall be responsible for acquiring all applicable permits for discharge of waters as necessary, except as may have otherwise been provided in other sections of these specifications.

1.08 MANATEE CONDITIONS FOR IN WATER WORK

A. The Contractor shall comply with the conditions outlined in the “Standard Manatee Conditions for In-Water Work” as published by the Florida Fish and Wildlife Conservation Commission. See the attached document at the end of this specification section for additional information.

1.09 PRECAUTIONS DURING ADVERSE WEATHER

A. During adverse weather, and against the possibility thereof, the Contractor shall take all necessary precautions so that the Work may be properly done and satisfactory in all respects. When required, protection shall be provided by use of tarpaulins, wood and building paper shelters, or other acceptable means. The Contractor shall be responsible for all changes caused by adverse weather.

B. The City may suspend construction operations at any time when, in its judgment, the conditions are unsuitable or the proper precautions are not being taken, whatever the weather conditions may be, in any season.

1.10 HURRICANE PRECAUTIONS

A. The requirements of Article 8.24 of the Contract Documents apply to the work of this section.

B. The Contractor shall take all precautions necessary to protect the job site during hurricane and tropical storm watches and warnings.

C. Within 30 days of the date of Notice to Proceed, the Contractor shall submit to the Engineer and City a Hurricane Preparedness Plan. The plan should outline the necessary measures which the Contractor proposes to perform at no additional cost to the City. The Plan shall be provided for informational purposes only and will not be reviewed by the Engineer or City.

1.11 PERIODIC CLEANUP AND BASIC SITE RESTORATION

A. During construction, the Contractor shall regularly remove from the site all accumulated debris and surplus materials of any kind which results from its operations. Unused equipment and tools shall be stored at the Contractor's yard or base of operations for the project.

B. The Contractor shall perform the cleanup work on a regular basis and as frequently as ordered by the Engineer. Basic site restoration in a particular area shall be accomplished immediately following the installation or completion of the required facilities in that area. Furthermore, such work shall also be accomplished, when ordered by the Engineer, if partially completed facilities must remain incomplete for some time period due to unforeseen circumstances.

C. Upon failure of the Contractor to perform periodic clean-up and basic restoration of the site to the Engineer's satisfaction, the Engineer may, upon five days prior written notice to the Contractor, employ such labor and equipment as it deems necessary for the purpose, and all costs resulting therefrom shall be charged to the Contractor and deducted from amounts of money that it may be due.

PART 2 – PRODUCTS

(NOT USED)

PART 3 – EXECUTION

(NOT USED)

- END OF SECTION -

STANDARD MANATEE CONDITIONS FOR IN-WATER WORK
2011

The permittee shall comply with the following conditions intended to protect manatees from direct project effects:

a. All personnel associated with the project shall be instructed about the presence of manatees and manatee speed zones, and the need to avoid collisions with and injury to manatees. The permittee shall advise all construction personnel that there are civil and criminal penalties for harming, harassing, or killing manatees which are protected under the Marine Mammal Protection Act, the Endangered Species Act, and the Florida Manatee Sanctuary Act.

b. All vessels associated with the construction project shall operate at "Idle Speed/No Wake" at all times while in the immediate area and while in water where the draft of the vessel provides less than a four-foot clearance from the bottom. All vessels will follow routes of deep water whenever possible.

c. Siltation or turbidity barriers shall be made of material in which manatees cannot become entangled, shall be properly secured, and shall be regularly monitored to avoid manatee entanglement or entrapment. Barriers must not impede manatee movement.

d. All on-site project personnel are responsible for observing water-related activities for the presence of manatee(s). All in-water operations, including vessels, must be shutdown if a manatee(s) comes within 50 feet of the operation. Activities will not resume until the manatee(s) has moved beyond the 50-foot radius of the project operation, or until 30 minutes elapses if the manatee(s) has not reappeared within 50 feet of the operation. Animals must not be herded away or harassed into leaving.

e. Any collision with or injury to a manatee shall be reported immediately to the Florida Fish and Wildlife Conservation Commission (FWC) Hotline at 1-888-404-3922. Collision and/or injury should also be reported to the U.S. Fish and Wildlife Service in Jacksonville (1-904-731-3336) for north Florida or in Vero Beach (1-772-562-3909) for south Florida, and emailed to FWC at ImperiledSpecies@myFWC.com.

f. Temporary signs concerning manatees shall be posted prior to and during all in-water project activities. All signs are to be removed by the permittee upon completion of the project. Temporary signs that have already been approved for this use by the FWC must be used. One sign which reads *Caution: Boaters* must be posted. A second sign measuring at least 8½ " by 11" explaining the requirements for "Idle Speed/No Wake" and the shut down of in-water operations must be posted in a location prominently visible to all personnel engaged in water-related activities. These signs can be viewed at http://www.myfwc.com/WILDLIFEHABITATS/manatee_sign_vendors.htm. Questions concerning these signs can be forwarded to the email address listed above.

CAUTION: MANATEE HABITAT

All project vessels

IDLE SPEED / NO WAKE

When a manatee is within 50 feet of work
all in-water activities must

SHUT DOWN

Report any collision with or injury to a manatee:

Wildlife Alert:

1-888-404-FWCC(3922)

cell *FWC or #FWC

SECTION 01580

PROJECT NOTIFICATION

PART 1 – GENERAL

1.01 THE REQUIREMENT

A. The Contractor shall furnish, install and maintain project identification signs and provide temporary on-site informational signs to identify key elements of construction facilities. Signs shall be removed upon completion of construction.

B. The Contractor shall notify property owners that may be affected by construction operation at least five (5) working days in advance.

1.02 RELATED REQUIREMENTS

A. All applicable sections of the Technical Specifications.

B. Conditions of the Contract.

1.03 PROJECT IDENTIFICATION SIGN

A. Up to two (2) painted signs, of not less than 32 square feet area each, with painted graphic content. Signs shall be in accordance with the General Conditions. Project signs must be submitted to the City for approval prior to fabrication and installation.

B. Graphic design, style of lettering, and colors: As designated by Engineer.

C. Erect on the site at a lighted location of high public visibility at a location outside the public Right-of-Way, as approved by Engineer.

D. An example project sign is provided at the end of this section. This sign shall be customized for the work.

1.04 INFORMATIONAL SIGNS

A. Painted signs and painted lettering, or standard products:

1. Size of signs and lettering: As required by regulatory agencies, or as appropriate to usage.

2. Colors: As required by regulatory agencies, otherwise of uniform colors throughout project.

B. Erect at appropriate locations to provide required information.

1.05 PROPERTY OWNER NOTIFICATION

A. All homes and businesses affected by construction activities shall be notified by use of a “doorhanger” type announcement describing at a minimum, the nature of the Work, the

proposed schedule, and the Contractor's contact information. An example door hanger is provided at the end of this section.

B. Door hangers shall be submitted to the City for approval prior to use.

C. Door hangers shall be printed and distributed by the Contractor.

1.06 QUALITY ASSURANCE

A. Sign Painter: Professional experience in type of Work required.

B. Finishes, Painting: Adequate to resist weathering and fading for scheduled construction period.

PART 2 – PRODUCTS

2.01 SIGN MATERIALS

A. Structure and Framing: May be new or used, wood or metal, in sound condition structurally adequate to Work and suitable for specified finish.

B. Sign Surfaces: Exterior softwood plywood with medium density overlay, standard large sizes to minimize joints.

C. Thickness: As required by standards to span framing members, to provide even, smooth surface without wave or buckles.

D. Rough Hardware: Galvanized.

E. Paint: Exterior quality:

1. Use Bulletin colors for graphics.

2. Colors for structure, framing, sign surfaces and graphics: As selected by Engineer.

PART 3 – EXECUTION

3.01 PROJECT IDENTIFICATION SIGN

A. Paint exposed surfaces of supports, framing and surface material; one coat of primer and one coat of exterior paint.

B. Paint graphics in styles, sizes and colors selected.

3.02 INFORMATIONAL SIGNS

A. Paint exposed surfaces: One coat of primer and one coat of exterior paint.

B. Paint graphics in styles, sizes and colors selected.

C. Install at a height for optimum visibility, on ground-mounted poles or attached to temporary structural surfaces.

3.03 MAINTENANCE

A. Maintain signs and supports in a neat, clean condition; repair damages to structure, framing or sign.

B. Relocate informational signs as required by progress of the Work.

3.04 REMOVAL

A. Remove signs, framing, supports and foundations at completion of project.

3.05 MEASUREMENT AND PAYMENT

A. There shall be no special measurement or payment for the Work under this section, it shall be included in the lump sum price bid for item ‘Mobilization’.

- END OF SECTION -

City of Fort Lauderdale

Stormwater Master Plan Improvements

Creating a resilient and safe coastal community

What's Happening?

What's Happening: The City of Fort Lauderdale is proactively preparing for the future by investing in new stormwater infrastructure to reduce flooding throughout our community.

(954) 828-8000
www.fortlauderdale.gov

WE BUILD COMMUNITY

Planned Improvements

- Installing a tidal valves
- Installing a new seawall
- Pavement Restoration
- Landscaping Restoration
- Installing new drainage pipe
- Installing new drainage structures

Cost

Expected Completion

Project Number

Contractor

Fort Lauderdale City Commission

Dean J. Trantalis Mayor	Heather Moraitis Commissioner, District I	Steven Glassman Commissioner, District II	Robert L. McKinzie Vice Mayor, District III	Ben Sorensen Commissioner, District IV	Chris Lagerbloom, ICMA-CM City Manager

[CONTRACTOR'S NAME]

[CONTRACTOR'S STREET ADDRESS]

[CONTRACTOR'S CITY, STATE AND ZIP]

[CONTRACTOR'S TELEPHONE NUMBER]

[CONTRACTOR'S FAX NUMBER]

MEMORANDUM

TO: **RESIDENTS OF [LOCATION OF CONSTRUCTION]**

DATE: **[CURRENT DATE]**

RE: **CONSTRUCTION IN YOUR AREA**

FROM: **[CONTRACTOR'S NAME}**

Construction in your area will commence on [date of construction commencement].

The construction area is from [boundary #1] to [boundary #2].

Access to the area will be limited at certain times due to the construction activities. We apologize for any inconvenience and we will do our best to accommodate access to residents.

Thank you,

[Contractor Name]

SECTION 01590

FIELD OFFICE, EQUIPMENT AND SERVICES

PART 1 – GENERAL

1.01 THE REQUIREMENT

A. The Contractor shall furnish and install one field office for its own use and the use of the Engineer at the project site, during the entire time of construction beginning at the commencement date stated in the Notice to Proceed until the date of final acceptance of the Work by the City. The field office shall be fully equipped, furnished, stocked and ready for occupancy at the project site designated location beginning within thirty (30) days after the Notice to Proceed. The field office shall be occupied by the Engineer until the date of final acceptance of the Project Closeout by the City.

B. The Contractor shall locate the field office in a location approved by the City and Engineer. The field office shall remain the property of the Contractor and shall be removed (including mountings, connections and hookups) from the site upon completion of the Work, returning the site and all improvements to their pre-Notice-To-Proceed condition.

C. No invoice for mobilization will be recommended for payment for any work done under the Contract until all field office facilities specified herein have been provided and accepted by the Engineer.

1.02 SUBMITTALS

A. Submit shop drawings and other information as required demonstrating that the field office meets the requirements of this Section.

B. Prior to installation of the field office, Contractor shall submit a certification from the supplier indicating that office walls, floor, and ceiling are free from mold.

1.03 GENERAL FIELD OFFICE REQUIREMENTS

A. The Contractor shall provide steps and platforms with handrails to permit entry to the offices. This work shall conform to the Florida Building Code and OSHA requirements.

B. The field office shall be blocked up and hurricane straps installed conforming to the applicable building codes.

C. The Contractor is responsible for procuring all necessary permits for the installation of the field offices at the location selected and approved by the Engineer and City.

PART 2 – PRODUCTS

2.01 CONTRACTOR'S FIELD OFFICE

A. Contractor shall furnish, equip and maintain a field office at the site. Field office shall be of a size required for the joint use of the Engineer and Contractor. Contractor shall provide one (1) private office (minimum 12' x 12') for the exclusive use of the Engineer and/or Owner Inspector. Engineer/Owner Inspector's office shall be, at a minimum, provided with the following features:

1. Entry door with cylinder lock, keyed differently from exterior door locks and two (2) sets of keys

2. Two (2) desks with adjustable computer chairs

3. Two (2) two drawer file cabinets

4. Two (2) bookshelves, 36" wide by 48" high.

5. Two (2) wastepaper baskets

6. Printer/copier with maintenance agreement for the duration of the contract. Printer/copier shall be equipped with 11-inch x 17-inch and 8 ½-inch by 11-inch paper trays. Printer/copier shall be capable of scanning, copying, enlarging, reducing, and printing in color and in black and white.

B. Equipment furnished shall be new or like new in appearance and function.

C. Contractor shall have readily accessible at field office the following documents: copies of the Contract Documents, addenda, latest approved Shop Drawings, all field project related correspondence, change orders, etc.

D. Field offices shall be provided with a central meeting room for the joint use of the Contractor and the Engineer and/or Owner Inspector. The central meeting room shall be furnished with the following:

1. One conference room table with seating and chairs for eight people.

2. Two paper towel dispensers with paper towels

3. One rack for handling drawings

4. One first aid cabinet conforming to OSHA requirements for an office up to 15 persons

5. One 6 cubic ft capacity refrigerator with ice making section

6. One dry erase board (24-inch by 36-inch)

7. One 600 watt microwave oven

E. The structure shall be watertight with suitable windows and doors with substantial locks. All windows shall have venetian blinds and aluminum screens. Adequate lighting shall be furnished with wall switches provided for all ceiling lighting fixtures which shall either be installed flush or recessed into the ceiling.

F. The field office shall conform to HUD requirements. Minimum ceiling height shall be 7 foot 6 inches. The interior shall have vinyl tile floor covering, wall paneling, 100-amp electrical service, copper wiring, copper water piping, and two wall mounted fire extinguishers. Washroom shall be equipped with a flush toilet, cabinet mounted wash basin and medicine cabinet complete with supplies. Plumbing fixtures shall be acceptable house type, trapped and vented.

G. Air conditioning shall be provided which is capable of lowering the temperature to 72 degrees Fahrenheit in South Florida, worst case, summer heat and humidity conditions. Heating shall be provided which is capable of raising the temperature to 78 degrees Fahrenheit in cold weather. Contractor shall be responsible for providing a new air filter once every month for the duration of the project.

H. The Contractor shall install the field office and provide services for the specified project duration as follows and as identified on the Drawings:

1. The Contractor shall provide and maintain adequate and clean sanitary facilities for the field office occupants and visitors. The facilities shall comply with local codes and regulations and be situated in an acceptable location.

2. The Contractor shall furnish the field office with high speed Wi-Fi internet services.

3. The Contractor shall furnish and replace electric bulbs and/or fluorescent tubes, toilet paper, towels and soap, water cooler with reusable jugs, cups, and maintain the office copiers, telecopiers and other equipment in first-class condition, including all paper, ink, and repairs until final acceptance of the work under this Contract. Single-use plastic water bottles are not acceptable.

4. The Contractor shall provide fire insurance, extended coverage and vandalism, malicious mischief and burglary and theft insurance coverage for the field office in the amount of $100,000 and for field office equipment in the amount of $50,000.

5. The Contractor shall furnish disposable cups and a free-standing electric water cooler to dispense hot and cold water from 5-gallon bottles with regular water bottle delivery service.

6. The Contractor shall furnish daily janitorial service to the field office.

7. The Contractor shall provide monthly pest control services covering both the interior and exterior areas of the field office.

I. The field office shall remain the property of the Contractor and shall be removed upon completion of the work. All affected work areas shall be restored to their original condition.

2.02. UTILITIES FOR FIELD OFFICES

A. The Contractor shall furnish and install necessary sanitary, water, electric, and telephone connections between the source and the field office as required. In addition, the Contractor shall coordinate with the local utility to arrange for startup and invoicing of electric and telephone services accordingly. The Contractor shall make arrangements for and pay for all costs for all water used during construction as specified in the Section entitled “Temporary Utilities.

B. The Contractor retains responsibility for procuring all necessary permits for the installation of field offices at the approved locations.

PART 2 – PRODUCTS

(NOT USED)

PART 3 – EXECUTION

(NOT USED)

- END OF SECTION -

SECTION 01600

MATERIALS AND EQUIPMENT

PART 1 – GENERAL

1.01 THE REQUIREMENT

A. The word "Products," as used herein is defined to include purchased items for incorporation into the Work, regardless of whether specifically purchased for project or taken from Contractor's stock of previously purchased products.

B. The word "Materials," is defined as products which must be substantially cut, shaped, worked, mixed, finished, refined, or otherwise fabricated, processed, installed, or applied to form units of Work.

C. The word "Equipment" is defined as products with operational parts, regardless of whether motorized or manually operated, and particularly including products with service connections (wiring, piping, and other like items).

D. Definitions in this Section are not intended to negate the meaning of other terms used in Contract Documents, including "specialties," "systems," "structure," "finishes," "accessories," "furnishings," “special construction," and similar terms, which are self-explanatory and have recognized meanings in the construction industry.

1.02 QUALITY ASSURANCE

A. Source Limitations: To the greatest extent possible for each unit of Work, the Contractor shall provide products, materials, or equipment of a singular generic kind from a single source.

B. Compatibility of Options: Where more than one choice is available as options for Contractor's selection of a product, material, or equipment, the Contractor shall select an option which is compatible with other products, materials, or equipment already selected. Compatibility is a basic general requirement of product/material selections.

1.03 DESIGN

A. Equipment and appurtenances shall be designed in conformity with the ASME, AIEE, NEMA and other generally accepted applicable standards and shall be of rugged construction and sufficient strength to withstand all stresses which may occur during fabrication, testing, transportation, installation and all conditions of operation. All bearings and moving parts shall be adequately protected by bushings or other acceptable means against wear, and provision shall be made for adequate lubrication by readily accessible devices. Details shall be designed for appearance as well as utility. Protruding members, joints, corners, gear covers, etc., shall be finished in appearance.

B. All exposed welds on machinery shall be ground smooth and the corners of structural shapes shall be rounded or chamfered.

1.04 PRODUCT DELIVERY-STORAGE-HANDLING

A. The Contractor shall deliver, handle, and store products in accordance with supplier's written recommendations and by means and methods that will prevent damage, deterioration, and loss including theft. Delivery schedules shall be controlled to minimize long-term storage of products at site and overcrowding of construction spaces. In particular, the Contractor shall provide delivery/installation coordination to ensure minimum holding or storage times for products recognized to be flammable, hazardous, easily damaged, or sensitive to deterioration, theft, and other sources of loss.

1.05 TRANSPORTATION AND HANDLING

A. Products shall be transported by methods to avoid product damage and shall be delivered in undamaged condition in supplier's unopened containers or packaging, dry.

B. The Contractor shall provide equipment and personnel to handle products, materials, and equipment including those provided by City, by methods to prevent soiling and damage.

C. The Contractor shall provide additional protection during handling to prevent marring and otherwise damaging products, packaging, and surrounding surfaces.

1.06 STORAGE AND PROTECTION

A. Products shall be stored in accordance with supplier's written instructions, with seals and labels intact and legible. Sensitive products shall be stored in weather-tight enclosures and temperature and humidity ranges shall be maintained within tolerances required by supplier's written instructions.

B. For exterior storage of fabricated products, they shall be placed on sloped supports above ground. Products subject to deterioration shall be covered with impervious sheet covering; ventilation shall be provided to avoid condensation.

C. Loose granular materials shall be stored on solid surfaces in a well-drained area and shall be prevented from mixing with foreign matter.

D. Storage shall be arranged to provide access for inspection. The Contractor shall periodically inspect to assure products are undamaged and are maintained under required conditions.

E. Storage shall be arranged in a manner to provide access for maintenance of stored items and for inspection.

1.07 MAINTENANCE OF STORAGE

A. Stored products shall be periodically inspected on a scheduled basis.

B. The Contractor shall maintain a log of inspections and make said log available to the Engineer on request.

C. The Contractor shall verify that storage facilities comply with supplier's product storage requirements.

D. The Contractor shall verify that supplier-required environmental conditions are maintained continually.

E. The Contractor shall verify that surfaces of products exposed to the elements are not adversely affected and that any weathering of finishes is acceptable under requirements of Contract Documents.

1.08 MAINTENANCE OF EQUIPMENT STORAGE

A. For mechanical and electrical equipment in long-term storage, the Contractor shall provide a copy of the supplier's service instructions to accompany each item, with notice on enclosed instruction shown on exterior of package.

B. Equipment shall be serviced on a regularly scheduled basis, and a log of services shall be maintained and submitted as a record document to the Engineer.

1.09 LUBRICANTS

A. During testing and prior to acceptance, the Contractor shall furnish all lubricants necessary for the proper lubrication of all equipment furnished under this Contract.

1.10 SPECIAL TOOLS

A. For each type of equipment furnished by it, the Contractor shall provide a complete set of all special tools (including calibration and test equipment) which may be necessary for the adjustment, operation, maintenance and disassembly of such equipment.

B. Special tools shall be delivered at the same time as the equipment to which they pertain. The Contractor shall properly store and safeguard such special tools until completion of the Work, at which time they shall be delivered to the City.

1.11 PROTECTION AGAINST ELECTROLYSIS

A. Where dissimilar metals are used in conjunction with each other, suitable insulation shall be provided between adjoining surfaces to eliminate direct contact and any resultant electrolysis. The insulation shall be bituminous impregnated felt, heavy bituminous coatings, nonmetallic separators or washers, or other acceptable materials.

1.12 FASTENERS

A. All necessary bolts, anchor bolts, nuts, washers, plates and bolt sleeves shall be furnished by the Contractor in accordance herewith.

B. Bolts shall have suitable washers and, where so required, their nuts shall be hexagonal.

C. All bolts, anchor bolts, nuts, washers, plates, and bolt sleeves shall be Type 316 stainless steel unless otherwise specifically indicated or specified.

D. Unless otherwise specified, stud, tap, and machine bolts shall be of the best quality refined bar iron. Hexagonal nuts of the same quality of metal as the bolts shall be used.

1.13 SALVAGED AND EXCAVATED MATERIALS

A. In the absence of special provisions in other Sections of the Specifications, salvage materials, equipment or supplies that occur are the property of the City and shall be cleaned and stored as directed by the Engineer.

B. All excavated materials needed for backfilling operation shall be stored on site. Where additional area is needed for stockpiling, it shall be obtained by the Contractor.

PART 2 – PRODUCTS

(NOT USED)

PART 3 – EXECUTION

(NOT USED)

- END OF SECTION -

SECTION 01660

EQUIPMENT TESTING AND STARTUP

PART 1 – GENERAL

1.01 THE REQUIREMENT

A. Equipment testing and startup are requisite to satisfactory completion of the contract and, therefore, shall be completed within the contract time. The Contractor shall allow sufficient time in its construction schedule to complete testing, trouble shooting and start-up activities.

B. As construction of the project enters the final stages of completion, the Contractor shall, in accordance with the requirements set forth in the Contract Documents, attend to the following items:

1. Schedule equipment manufacturer's visits to site.
2. Calibration of instruments and controls.
3. Perform required testing, adjusting and balancing of project components.
4. Schedule start-up and initial operation.
5. Furnish skilled personnel during initiation operation to provide back-up maintenance services to equipment, as necessary.
6. Furnish operation and maintenance training to City's personnel per requirements of the Contract documents.

1.02 EQUIPMENT TESTING

A. The Contractor shall provide the services of an experienced and authorized representative of the supplier of each item of equipment (excluding minor items of equipment specifically exempted by the Engineer in writing), who shall visit the site of the Work and inspect, check, adjust if necessary, and approve the equipment installation. In each case, the Contractor shall arrange to have the supplier's representative revisit the job site as often as necessary until any and all trouble is corrected and the equipment installation and operation are satisfactory to the Engineer. The Contractor shall provide effective coordination of all parties necessary for complete system testing, including Suppliers, subcontractors, the Engineer, and the City.

B. The Contractor shall require that each supplier's representative furnish to the Engineer a written report addressed to the City, and copied to the Engineer, certifying that the equipment has been properly installed and lubricated, is in accurate alignment, is free from any undue stress imposed by connecting piping or anchor bolts, has been operated satisfactorily under full-load conditions is ready for operation and the City's operating

personnel have been instructed in the operation, maintenance and lubrication of the equipment.

C. The Contractor shall be responsible for scheduling all operations testing. The Contractor is advised that the Engineer and the City's operating personnel will witness operations testing.

D. The supplier's representative shall instruct the City's operating personnel in correct operation and maintenance procedures. The instruction shall demonstrate start-up, operation, control, adjustment, trouble-shooting, servicing, maintenance, and shutdown of each item of equipment. Such instruction shall be scheduled at a time arranged with the City at least two weeks in advance and shall be provided while the respective representative's equipment is fully operational. On-site instruction shall be given by qualified persons who have been made familiar in advance with the equipment and systems in the plant. The Contractor shall have submitted, and had accepted, the O&M Manuals (specified in the Section entitled "Submittals") prior to commencement of training.

E. The Contractor shall notify the Engineer at least 14 days in advance of each equipment test or City training session.

F. Training shall be provided to two separate shifts of the City's personnel. Training may occur anytime over a 24-hour period.

G. The Contractor shall furnish all personnel, power, water, chemicals, fuel, oil, grease, and all other necessary equipment, facilities, and services required for conducting the tests except as otherwise accepted by the Engineer.

1.03 STARTUP

A. The Contractor shall provide the effective coordination of all parties necessary for the successful startup, including suppliers, subcontractors, the Engineer, and the City.

B. It is not the intent of the Engineer to instruct the Contractor in the startup of the facilities; however, the Engineer will be available prior to and during startup to provide technical support to the Contractor.

C. The Contractor shall be required to startup the equipment, under direction of the Engineer and City, and operate it for a continuous 7-day (24 hours per day) period at design conditions. The Contractor shall be available at all times during this period to provide necessary maintenance support services as may be deemed necessary by the City and/or Engineer. This 7-day period must be successfully completed prior to the issuance of Substantial Completion.

D. Not less than 3 months prior to startup, the Contractor shall submit to the Engineer for review, a detailed schedule of operations which will be necessary to effect a successful initial operation and sustained period of operation for the duration of the required startup period as specified in the Section entitled "Submittals."

E. The startup shall not be commenced until all required leakage tests, disinfection, and equipment tests, as applicable, have been completed to the satisfaction of the Engineer.

F. All defects in materials or quality which appear during this startup period shall be immediately corrected by the Contractor. Time lost for equipment repairs, wiring corrections, control point settings, or other reasons which actually interrupt the startup may, at the discretion of the Engineer, be justifiable cause for extending the startup test duration or beginning the startup test period again.

G. During the startup, the Contractor shall provide the services of authorized representatives of the suppliers, in addition to those services required under operations testing, as necessary, to correct faulty equipment operation.

PART 2 – PRODUCTS

(NOT USED)

PART 3 – EXECUTION

(NOT USED)

- END OF SECTION -

SECTION 01700 - PROJECT CLOSEOUT

PART 1 -- GENERAL

1.01 THE REQUIREMENT

A. Final Cleaning

1. At the completion of the Work, the CONTRACTOR shall remove all rubbish from and about the site of the Work, and all temporary structures, construction signs, tools, scaffolding, materials, supplies and equipment which the CONTRACTOR or any of their Subcontractors may have used in the performance of the Work. CONTRACTOR shall broom clean paved surfaces and rake clean other surfaces of grounds.

2. The CONTRACTOR shall thoroughly clean all materials, equipment and structures; all marred surfaces shall be touched up to match adjacent surfaces; dirty air handling unit filters and burned out lights replaced as required; all glass surfaces cleaned and floors cleaned and polished so as to leave work in a clean and new appearing condition.

3. The CONTRACTOR shall maintain cleaning until project, or portion thereof, is occupied by the City.

B. Lubrication Survey

1. A lubrication survey, made by a lubricant supply firm, subject to the approval of the City shall be provided and paid for by the CONTRACTOR.

2. The lubrication survey shall list all equipment, the equipment manufacturer's lubrication recommendations, and an interchangeable lubricants tabulation standardizing and consolidating lubricants whenever possible.

3. The CONTRACTOR shall supply all lubricants, applicators and labor for lubricating the equipment, in accordance with manufacturer's recommendations, for field testing and prior to final acceptance. A supply of required lubricants sufficient for start-up and one year of operation shall also be supplied by the CONTRACTOR.

4. Copies of the approved lubrication survey shall be furnished to the ENGINEER prior to final acceptance in accordance with the section entitled “Submittals”. CONTRACTOR shall also furnish the lubrication survey to ENGINEER electronically in Excel format.

C. Spare Parts and Special Tools

1. As soon as practicable after approval of the list of equipment, the CONTRACTOR shall furnish spare parts data for each different item of equipment listed. The data shall include a complete list of parts and supplies, with current unit prices and source

or sources of supply. A sample form is included at the end of this section.

2. The CONTRACTOR shall also furnish a list of parts, and supplies that are either normally furnished at no extra cost with the purchase of the equipment or specified to be furnished as part of the Contract and a list of additional items recommended by the manufacturer to assure efficient operation for a period of 120 days for the particular installation.

3. All parts shall be securely boxed and tagged, and clearly marked on the box and individually for identification as to the name of manufacturer or supplier, applicable equipment, part number, description and location in the equipment. All parts shall be protected and packaged for a shelf life of at least ten (10) years.

4. The CONTRACTOR shall furnish at no additional cost to the City with each piece of equipment as a minimum, one (1) complete set, or the number of sets called for in the Technical Specifications, of suitably marked special tools and appliances which may be needed to adjust, operate, maintain, or repair the equipment.

5. The CONTRACTOR shall submit, for approval by the ENGINEER, a complete list of the special tools and appliances to be furnished. Such tools and appliances shall be furnished in approved painted steel cases properly labeled and equipped with good grade cylinder locks and duplicate keys.

D. Equipment Start-Up Services

1. Equipment start-up period, for the training of plant personnel, shall begin after satisfactory completion and acceptance of the field tests and coincidentally with the certified date of substantial completion for the part of the Work for which the equipment is included. If the equipment is not covered by a certificate of substantial completion for a part of the Work, the period shall begin upon substantial completion of the project.

2. During the equipment start-up period the CONTRACTOR shall furnish, at no additional cost to the City the services of factory trained representatives of the equipment manufacturers for the equipment designated in the Specifications to:

   a. Assist in the start-up and operations of the equipment.

   b. Assist in the training of plant personnel, designated by the City in the proper operation and maintenance of the equipment.

3. The City shall:

   a. Provide the necessary plant personnel to be instructed in the operation and maintenance of the equipment. The City's personnel shall operate all equipment.

b. Pay for all fuel, power and chemicals consumed beyond quantities specified in the Contract Documents. The CONTRACTOR shall pay for fuel, power, and chemicals consumed up to the date of "certified substantial completion" except as otherwise specified herein.

4. CONTRACTOR shall be available to promptly repair all Work during the start-up period so as to cause minimum disruption to the total plant operation.

5. Upon completion of a minimum of ten (10) consecutive and continuous days of satisfactory operation, or the number of days called for in the Technical Specifications (whichever is greater), the City will assume operation and operating cost of the equipment. If the equipment malfunctions during this start-up period, the start-up period will be repeated until satisfactory operation is achieved.

6. In the event a system, equipment or component proves defective or is unable to meet specified performance criteria, the CONTRACTOR shall replace the defective item and the minimum one (1) year guarantee period, or the guarantee period called for in the Technical Specifications for the item shall start after satisfactory replacement and testing of the item.

E. Final Cleanup; Site Rehabilitation

1. Before finally leaving the site, the CONTRACTOR shall wash and clean all exposed surfaces which have become soiled or marked, and shall remove from the site of Work all accumulated debris and surplus materials of any kind which result from their operation, including construction equipment, tools, sheds, sanitary enclosures, etc. The CONTRACTOR shall leave all equipment, fixtures, and work, which the CONTRACTOR has installed, in a clean condition. The completed project shall be turned over to the City in a neat and orderly condition.

2. The site of the Work shall be rehabilitated or developed in accordance with other sections of the Specifications and the Drawings. In the absence of any portion of these requirements, the CONTRACTOR shall completely rehabilitate the site to a condition and appearance equal or superior to that which existed just prior to construction, except for those items whose permanent removal or relocation was required in the Contract Documents or ordered by the City.

F. Final Inspection

1. Final cleaning and repairing shall be so arranged as to be finished upon completion of the construction work. The CONTRACTOR will make their final cleaning and repairing, and any portion of the Work finally inspected and accepted by the ENGINEER shall be kept clean by the CONTRACTOR, until the final acceptance of the entire Work.

2. When the CONTRACTOR has finally cleaned and repaired the whole or any portion of the Work, the CONTRACTOR shall notify the ENGINEER that the CONTRACTOR is ready for final inspection of the whole or a portion of the Work, and the ENGINEER

will thereupon inspect the Work. If the Work is not found satisfactory, the ENGINEER will order further cleaning, repairs, or replacement.

3. When such further cleaning or repairing is completed, the ENGINEER, upon further notice, will again inspect the Work. The "Final Payment" will not be processed until the CONTRACTOR has complied with the requirements set forth, and the ENGINEER has made the final inspection of the entire Work and is satisfied that the entire Work is properly and satisfactorily constructed in accordance with the requirements of the Contract Documents.

G. Project Close Out

1. As construction of the project enters the final stages of completion, the CONTRACTOR shall, in concert with accomplishing the requirements set forth in the Contract Documents, attend to or have already completed the following items as they apply to their contract:

   a. Scheduling equipment manufacturers' visits to site.

   b. Required testing of project components.

   c. Scheduling start-up and initial operation.

   d. Scheduling and furnishing skilled personnel during initial operation.

   e. Correcting or replacing defective work, including completion of items previously overlooked or Work which remains incomplete, all as evidenced by the ENGINEER's "Punch" Lists.

   f. Attend to any other items listed herein or brought to the CONTRACTOR's attention by the ENGINEER.

2. Just before the Certificate of Substantial Completion is issued, the CONTRACTOR shall accomplish the cleaning and final adjustment of the various building components as specified in the Specifications and as follows:

   a. Clean all glass and adjust all windows and doors for proper operation.

   b. Clean all finish hardware after adjustment for proper operation.

   c. Touch up marks or defects in painted surfaces and touch up any similar defects in factory finished surfaces.

   d. Wax all resilient flooring materials.

   e. Remove bitumen from gravel stops, fascia, and other exposed surfaces.

   f. Remove all stains, marks, fingerprints, soil, spots, and blemishes from all finished surfaces, tile, stone, brick, and similar surfaces.

3. In addition, and before the Certificate of Substantial Completion is issued, the CONTRACTOR shall submit to the ENGINEER (or to the City if indicated) certain records, certifications, etc., which are specified elsewhere in the Contract Documents. A partial list of such items appears below, but it shall be the CONTRACTOR's responsibility to submit any other items which are required in the Contract Documents:

    a. Test results of project components.

    b. Performance Affidavits for equipment.

    c. Certification of equipment or materials in compliance with Contract Documents.

    d. Operation and maintenance instructions or manuals for equipment.

    e. One set of neatly marked-up record drawings showing as-built changes and additions to the Work under their Contract.

    f. Any special guarantees or bonds (Submit to City).

4. The CONTRACTOR's attention is directed to the fact that required certifications and information under Item 3 above must actually be submitted earlier in accordance with other Sections of the Specifications.

PART 2 – PRODUCTS (NOT USED)

PART 3 – EXECUTION (NOT USED)

SPARE PARTS INVENTORY

SUMMARY SHEET

DATE _____

SPEC SECTION _____

EQUIPMENT _____

LOCATION _____

MANUFACTURER NAME _____

ADDRESS _____

CONTACT _____ PHONE (____) _____

SPARE PARTS INVENTORY:

PART NO.	QUANTITY	DESCRIPTION	MANUFACTURER

Received:

_____	_____	_____
Resident Inspector	Contractor's Representative	City Representative

- END OF SECTION -

DIVISION 2 – SITE CONSTRUCTION

SECTION 02015

MOBILIZATION AND DEMOBILIZATION

PART 1 – GENERAL

1.01 THE REQUIREMENT

A. The Work specified in this section consists of all Work necessary to move in personnel and equipment and prepare the site for construction, complete and to remove the same personnel and equipment from the site when construction is complete.

B. The limits of the Contractor's staging area and other applicable restrictions are shown on the Drawings.

PART 2 – PRODUCTS

2.01 TEMPORARY UTILITIES

A. The Contractor shall provide all temporary facilities required for performing the Work as specified in Sections entitled "Temporary Utilities".

PART 3 – EXECUTION

3.01 LAYOUT

A. The Contractor shall set up construction facilities in a neat and orderly manner within designated areas as noted on the Staging Plan drawing of the Contract documents. It shall accomplish all required Work in accordance with applicable portions of these specifications and shall confine its operations to Work areas as shown on the drawings.

3.02 DEMOBILIZATION

A. At the completion of Work the Contractor shall remove its personnel, equipment, and temporary facilities from the site in a timely manner. The Contractor shall also be responsible for transporting all unused materials belonging to the City to a place of storage on site designated by the City and for removing from the site and disposing of all other materials and debris resulting from the construction. It shall then return all areas used for its activities to a condition as noted on the Contract documents.

- END OF SECTION -

SECTION 02100

EROSION AND SEDIMENTATION CONTROL – STORMWATER POLLUTION PREVENTION

PART 1 – GENERAL

1.01 DESCRIPTION

A. Provide all work and take all measures necessary to control soil erosion resulting from construction operations, prevent flow of sediment from construction site, and contain construction materials (including excavation and backfill) within protected working area as to prevent damage to any stream or wetlands.

B. The Contractor is responsible for creating a Stormwater Pollution Prevention Plan (SWPPP) for regulatory approval and enforcing its requirements in accordance with applicable Federal, State, and local regulations. The complete SWPPP shall be submitted by the Contractor and approved by the regulatory agencies having jurisdiction before the start of construction. The Contractor shall provide all labor, materials, and equipment required in the prevention of environmental pollution and degradation and thereby for the protection of all environmental resources encountered during construction.

C. The Contractor is responsible for all permitting and reporting forms as required through the Florida Department of Environmental Protection (FDEP) – National Pollutant Discharge Elimination System (NPDES) program for construction activities.

D. Temporary erosion controls may include, but are not limited to, mulching, netting, and watering on site surfaces and spoil and borrow area surfaces and providing interceptor ditches at ends of berms and at those locations that will ensure erosion during construction will be either eliminated or maintained within acceptable limits as established by the City.

E. Temporary sedimentation controls may include, but are not limited to, silt dams, barriers, turbidity curtains, hay bales, drop inlet protection, curb inlet protection, and appurtenances at the foot of sloped surfaces and other areas that will ensure sedimentation pollution will be either eliminated or maintained within acceptable limits as established by the City.

1.02 REFERENCE

A. “Guidelines for Erosion and Sediment Control, Planning and Implementation” published by the United States Environmental Protection Agency.

B. “Processes, Procedures and Methods to Control Pollution Resulting from all Construction Activity”, published by the United States Environmental Protection Agency.

C. “The Florida Stormwater, Erosion, and Sedimentation Control Inspector’s Manual” published by the Florida Department of Environmental Protection.

D. NPDES Stormwater Program: www.dept.state.fl.us/water/stormwater/npdes/

1.03 SUBMITTALS

A. Contractor shall provide a copy of all permit applications, approvals, and reporting documentation submitted in support to SWPPP.

B. Contractor shall submit a copy of the SWPPP in accordance with Section 01300.

1.04 QUALITY ASSURANCE

A. Operations restricted to areas of work indicated on drawings and area which must be entered for construction of temporary or permanent facilities.

B. Engineer has authority to limit surface area of erodible earth material exposed by clearing and grubbing, excavation, borrow and fill operations and to direct immediate permanent or temporary pollution control measures to prevent contamination of any stream or wetlands, including construction of temporary berms, dikes, dams, sediment basins, sediment traps, slope drains, and use of temporary mulches, mats, or other control devices or methods as necessary to control erosion.

PART 2 – PRODUCTS

2.01 GENERAL

A. All products shall be in accordance with Drawings and approved SWPPP.

PART 3 – EXECUTION

3.01 GENERAL

A. Prior to the start of work, provide and install the site sedimentation and erosion control as indicated on the Drawings and the Contractor prepared SWPPP and as required by applicable regulations. Maintain such system for the duration of the project.

B. Should any of the temporary erosion and sediment control measures employed by the Contractor fail to produce results that comply with the requirements of the City or SWPPP, Contractor shall immediately take any and all necessary steps to correct the deficiency at his own expense.

C. Construct earth berms or diversions to intercept and divert runoff water from critical areas.

D. Discharge silt-laden water from excavations onto filter fabric mat and/or baled hay or straw sediment traps to ensure that only sediment-free water is returned to watercourses.

E. Do not place excavated soil material adjacent to watercourse in manner that will cause it to wash away by high water or runoff.

F. Prevent damage to vegetation by excessive watering or silt accumulation in the discharge area.

G. Do not dump soiled material into any streams, wetlands, surface waters, or unspecified locations.

H. Do not pump silt-laden water from trenches or excavations into surface waters, streams, wetlands, or natural or man-made channels leading thereto.

I. Prevent damage to vegetation adjacent to or outside of construction area limits.

J. Do not dispose of trees, brush, debris, paints, chemicals, asphalt products, concrete curing compounds, fuels, lubricants, insecticides, washwater from concrete trucks or hydroseeders, or any other pollutant in streams, wetlands, surface waters, or natural or man-made channels leading thereto, or unspecified locations.

K. Do not alter flow line of any stream unless indicated or specified.

L. All exposed graded, cleared, filled, etc. land to remain shall be stabilized with sod, filter fabric, and/or vegetation acceptable to the Owner.

- END OF SECTION -

SECTION 02200

SITE PREPARATION

PART 1 – GENERAL

1.01 DEFINITIONS

A. Interfering or Objectionable Material: Trash, rubbish, and junk; vegetation and other organic matter, whether alive, dead, or decaying; topsoil.

B. Clearing: Removal of interfering or objectionable material lying on or protruding above ground surface.

C. Grubbing: Removal of vegetation and other organic matter including stumps, buried logs, and roots greater than 2 inches caliper to a depth of 12 inches below subgrade.

D. Scalping: Removal of sod without removing more than upper 3 inches of topsoil.

E. Stripping: Removal of topsoil remaining after applicable scalping is completed.

F. Project Limits: Areas, as specified, within which Work is to be performed.

1.02 QUALITY ASSURANCE

A. Obtain Engineer's approval of staked clearing, grubbing, and stripping limits, prior to commencing clearing, grubbing, and stripping.

1.03 SCHEDULING AND SEQUENCING

A. Prepare site only after adequate erosion and sediment controls are in place. Limit areas exposed uncontrolled to erosion during installation of temporary erosion and sediment controls.

PART 2 – MATERIALS

(NOT USED)

PART 3 – EXECUTION

3.01 GENERAL

A. Clear, grub, and strip areas actually needed for waste disposal, borrow, or site improvements within limits specified.

B. Property obstructions which are to remain in-place, such as buildings, sewers, drains, water or gas pipes, bridges, etc., are to be carefully protected from damage.

C. Do not injure or deface vegetation that is not designated for removal. All branches potentially interfering with construction operations shall be pruned prior to starting

work and following approval of the City and the City of Fort Lauderdale Urban Forester.

3.02 LIMITS

A. As follows, but not to extend beyond project limits:

1. Excavation Including Trenches: 5 feet beyond top of cut slopes or shored wall.

2. Fill:

a. Clearing and Grubbing: 5 feet beyond toe of permanent fill.

b. Stripping and Scalping: 2 feet beyond toe of permanent fill.

3. Waste Disposal:

a. Clearing: 5 feet beyond perimeter.

b. Scalping and Stripping: Not required.

c. Grubbing: Around perimeter as necessary for neat, finished appearance.

4. Overhead Utilities:

a. Clearing, Grubbing, Scalping, and Stripping: Wherever grading is required, including borrow pits, ditches, etc.

b. Other Areas: As shown.

B. Remove rubbish, trash, and junk from entire area within Project limits.

3.03 TEMPORARY REMOVAL OF INTERFERING PLANTINGS

A. Remove and store, as specified in the Contract Documents, trees, plants, and ground covers, shrubs and trees that are not designated for removal but do interfere with construction or could be damaged by construction activities.

B. Photograph and document location, orientation, and condition of each plant prior to its removal. Record sufficient information to uniquely identify each plant removed and to assure accurate replacement.

3.04 CLEARING

A. Clear areas within limits specified.

B. Fell trees so that they fall away from facilities and vegetation not designated for removal.

C. Cut stumps not designated for grubbing 12 inches below the ground surface.

D. Cut off shrubs, brush, weeds, and grasses to within 2 inches of ground surface.

3.05 GRUBBING

A. Grub areas within limits specified.

3.06 SCALPING

A. Do not remove sod until after clearing and grubbing is completed and resulting debris is removed.

B. Scalp areas within limits specified.

3.07 STRIPPING

A. Do not remove topsoil until after scalping is completed.

B. Strip areas within limits to minimum depths specified. Do not remove subsoil with topsoil.

C. Stockpile strippings, meeting requirements of Section 02911, Soil Preparation, for topsoil, separately from other excavated material.

3.08 TREE REMOVAL OUTSIDE CLEARING LIMITS

A. Remove Within Project Limits:

1. Dead, dying, leaning, or otherwise unsound trees that may strike and damage Project facilities in falling.

2. Trees designated by Engineer.

3. Cut stumps off flush with ground, remove debris, grind stump and if disturbed, restore surrounding area to its original condition.

3.09 TREE TOPPING

A. Top trees designated by the City so remaining portion will not strike facilities in falling. Where topping will remove more than 1/2 of a tree's crown, remove entire tree.

B. Treat wounds resulting from topping in accordance with standard horticultural practice to preserve the natural character of the tree.

3.10 PRUNING

A. Remove branches below the following heights:

1. Sixteen feet above roadways and shoulders.

2. Nine feet above sidewalks.

3. Six feet above roofs.

B. Prune only after planting and in accordance with standard horticultural practice to preserve the natural character of the plant. Perform in presence of the Engineer. Remove all dead wood, suckers, and broken or badly bruised branches. Use only clean, sharp tools. Do not cut lead shoot.

3.11 DISPOSAL

A. Clearing and Grubbing Debris:

1. Woody debris may be chipped. Chips may be sold to Contractor's benefit or used for landscaping onsite as mulch or uniformly mixed with topsoil, provided that resulting mix will be fertile and not support combustion. Maximum dimensions of chipped material used onsite shall be 1/4-inch by 2 inches. Dispose of chips that are unsaleable or unsuitable for landscaping or other uses with unchipped debris.

2. Limit offsite disposal of clearing and grubbing debris to locations that are approved by federal, state, and local authorities, and that will not be visible from Project.

B. Scalpings: As specified for clearing and grubbing debris.

C. Strippings:

1. Dispose of strippings that are unsuitable for topsoil or that exceed quantity required for topsoil offsite or in waste disposal areas approved by Engineer.

2. Stockpile topsoil in sufficient quantity to meet Project needs. Dispose of excess strippings as specified for clearing and grubbing.

- END OF SECTION -

SECTION 02220

DEMOLITION

PART 1 - GENERAL

1.01 THE REQUIREMENT

A. Removal and disposal of structures, pavement surfaces, sidewalks, underground obstructions, and other facilities necessary to prepare the area for construction of proposed facilities.

PART 2 - MATERIALS

(NOT USED)

PART 3 - EXECUTION

3.01 GENERAL

A. Utilities:

1. Notify City or appropriate utilities to turn off affected services before starting demolition or alterations. Provide not less than seven (7) days' notice to the owner of the utility prior to the shutdown.

2. Remove utility lines exposed by demolition excavation.

3. Remove electric, sanitary, and storm drainage adjacent to buildings to be demolished.

4. Excavate utility lines serving buildings to be demolished and provide a permanent leak-proof closure for water and gas lines.

5. Plug sewerlines at locations shown or at limits of excavation if not shown with concrete length of plug, 5 feet minimum to prevent groundwater infiltrating sewer systems.

B. Removal and Storage of Equipment for Reuse:

1. Do not remove equipment and materials without approval of Engineer.

2. Properly store and maintain equipment and materials in same condition as when removed.

3. Engineer will determine condition of equipment and materials prior to removal.

3.02 DEMOLITION

A. Additional quantities of new construction or additional work caused by the demolition, beyond the limits, will be performed at the Contractor's expense.

B. Drawings define minimum portion of structures to be removed. Unless otherwise shown, rough cuts or breaks may be made exceeding limits of demolition shown. Provide sawcut at limits of all pavement removal. Structures shall be removed in such a way as to leave no obstructions to any proposed new structures or to any waterways.

C. Core drill floor slabs, catch basins, and other concrete improvements to remain in place below ground, or break holes at structure's lowest point to allow water to freely migrate through.

D. Remove piping from areas to be backfilled. Pipe, valves, and fittings adjacent to those to be removed may also be removed as salvage.

E. Remove all materials associated with existing equipment that is to be removed or relocated.

F. Cut off concealed or embedded conduit, boxes, or other materials a minimum of 2 inches below final finished surface.

G. Extract existing piling, which conflict with new piles, prior to driving new piles.

3.03 DISPOSAL

A. Dispose of debris and other nonsalvaged materials offsite in licensed landfills.

3.04 BACKFILLING

A. Demolished Areas: Backfill to existing ground level or foundation level of new construction.

B. Backfill Material and Compaction:

1. Conform to Sections 02222 and 02224.

2. Do not use demolition debris as backfill material.

3.05 SALVAGE

A. Equipment and materials, including piping within the limits of demolition, unless otherwise specified, will become the property of Contractor.

B. Any material designated to remain by the City shall be stored in neat piles in a location directed by the City.

C. Fire Hydrants:

1. Salvage for future use by City.

2. Remove and leave for City in location directed by the City.

- END OF SECTION -

SECTION 02222

EXCAVATION AND BACKFILL FOR UTILITIES

PART 1 – GENERAL

1.01 THE REQUIREMENT

A. Excavate, grade and backfill as required for underground piping systems and appurtenances as shown on the Drawings and specified herein.

B. All excavation for the project is unclassified.

1.02 RELATED WORK SPECIFIED ELSEWHERE

A. Division 15

B. Division 16

1.03 REFERENCE SPECIFICATIONS, CODES, AND STANDARDS

A. Codes: All codes, as referenced herein, are specified in Section 01090, "Reference Standards".

B. Commercial Standards:

ASTM D 422	Standard Test Method for Particle-Size Analysis of Soils.
ASTM D 698	Standard Test Methods for Laboratory Compaction Characteristics of Soil Using Standard Effort.
ASTM D 1556	Standard Test Method for Density and Unit Weight of Soil in Place by the Sand-Cone Method.
ASTM D 1557	Standard Test Methods for Laboratory Compaction Characteristics of Soil Using Modified Effort.
ASTM D 2419	Standard Test Method for Sand Equivalent Value of Soils and Fine Aggregate.
ASTM D6938	Standard Test Method for In-Place Density and Water Content of Soil and Soil-Aggregate by Nuclear Methods (Shallow Depth)

1.04 SUBMITTALS

A. General: Submit information and samples to the Engineer for review as specified herein in accordance with the Section entitled "Submittals".

B. Dewatering: The Contractor shall submit to the Engineer its proposed methods of handling trench water and the locations at which the water will be disposed of. Methods shall be acceptable to the Engineer before starting the excavation.

C. Bedding and Backfill Materials: The Contractor shall notify the Engineer of the off-site sources of bedding and backfill materials.

1. Submit to the Engineer a representative sample weighing approximately 25 lbs. The sample shall be delivered to a location at the work site determined by the Engineer.

2. The Contractor shall notify the Engineer in writing of the sources of each material at least ten calendar days prior to the anticipated use of the materials.

D. Sheeting System: Drawings of the sheeting system and design computations shall be submitted to the Engineer; however, the review of these drawings shall in no way relieve the Contractor of the responsibility to provide a safe and satisfactory sheeting and shoring system. Sheeting and shoring shall be designed by the Contractor, and the proposed design shall be sealed by a Professional Engineer registered in the State of Florida. If the Engineer is of the opinion that at any point sufficient or proper supports have not been provided, it may order additional supports put in at the Contractor's expense.

E. Dewatering Permits: If the quantity or nature of water withdrawn requires approval/permits from regulatory agencies, the Contractor shall procure such permits at its expense and submit copies to the Engineer before commencing the work.

1.05 QUALITY CONTROL

A. An independent testing laboratory will be retained by the City to do appropriate testing as described in the Section entitled "Quality Control". The Contractor shall schedule its work so as to permit a reasonable time for testing before placing succeeding lifts and shall keep the laboratory informed of his progress. A minimum of 48 hours of notice shall be provided to the testing laboratory to mobilize its activities.

B. Field Density Testing Frequency for Pipeline Backfill: The frequency of the field density testing shall be in accordance with the notes on the Drawings. If the Drawings do not indicate a frequency, then field density testing shall be as follows:

1. Pipeline installed: for each layer (i.e. lift) of compacted material perform a minimum of one density test at 150-foot interval.

1.06 SUBSURFACE INFORMATION

A. A separate geotechnical report is provided for information purposes with the Contract Documents. The report identifies properties below grade and also offers recommendations for foundation design, primarily for use of the Engineer. The recommendations shall not be construed as requirements of the Contract.

B. The City and the Engineer will not assume responsibility for variations of sub-soil quality or conditions at locations other than places shown and at the time the geotechnical investigation was made. The Contractor shall examine the site and review the available geotechnical report or undertake its own subsurface investigation prior to submitting its bid, taking into consideration all conditions that may affect its work.

1.07 GROUNDWATER

A. The Contractor shall be responsible for anticipating groundwater conditions and shall provide positive control measures as required. Such measures shall ensure stability of excavations, groundwater pressure control, prevention of tanks, pipes, and other structures from being lifted by hydrostatic pressures, and avoiding the disturbance of subgrade bearing materials.

B. The Contractor shall be responsible for obtaining all permits required for dewatering operations.

1.08 TRENCH SAFETY ACT COMPLIANCE

A. The Contractor by signing and executing the contract is, in writing, assuring that it will perform any trench excavation in accordance with the Florida Trench Safety Act, Section 553.60 et. seq. The Contractor has further identified the separate item(s) of cost of compliance with the applicable trench safety standards as well as the method of compliance as noted in the "Bid Forms" Section of the Contract front-end documents.

B. The Contractor acknowledges that this cost is included in the applicable items of the Proposal and Contract and in the Grand Total Bid and Contract Price.

C. The Contractor is, and the City and Engineer are not, responsible to review or assess the Contractor's safety precautions, programs or costs, or the means, methods, techniques or technique adequacy, reasonableness of cost, sequences or procedures of any safety precaution, program or cost, including but not limited to, compliance with any and all requirements of Florida Statute Section 553.60 et. seq. cited as the "Trench Safety Act". The Contractor is, and the City and Engineer are not, responsible to determine if any safety or safety related standards apply to the project, including but not limited to, the "Trench Safety Act".

1.09 PROTECTION OF PROPERTY AND STRUCTURES

A. The Contractor shall, at its own expense, sustain in place and protect from direct or indirect injury, all pipes, poles, conduits, walls, buildings, and all other structures, utilities, and property in the vicinity of its Work. Such sustaining shall be done by the Contractor. The Contractor shall take all risks attending the presence or proximity of pipes, poles, conduits, walls, buildings, and all other structures, utilities, and its Work. It shall be responsible for all damage, and assume all expenses, for direct or indirect injury and damage, caused by its Work, to any such pipe, structures, etc., or to any person or property, by reason of injury to them, whether or not such structures, etc., are shown on the Drawings.

B. Barriers shall be placed at each end of all excavations and at such places as may be necessary along excavations to warn all pedestrian and vehicular traffic of such excavations. Barricades with flashing lights shall also be placed along excavation from sunset each day to sunrise of the next day until such excavation is entirely refilled, compacted, and paved. All excavations shall be barricaded where required to meet OSHA, local and Federal Code requirements, in such a manner to prevent persons from falling or walking into any excavation within the site fenced property limits.

PART 2 – PRODUCTS

2.01 MATERIALS

A. General: Materials shall be furnished as required from on-site excavations or from acceptable off-site sources as required. The Contractor shall notify the Engineer in writing of the sources of each material at least ten calendar days prior to the anticipated use of the materials.

2.02 BEDDING

A. Pipe Bedding: In general, clean sandy materials excavated from the utility trench, that is free from organics, clay and construction debris, can be used as pipe bedding when construction is in a dry condition and when the bedding is not sided by muck. Pipe bedding material shall be able to pass through a 3/4-inch sieve. Separation of suitable material for pipe bedding from other material shall be made during the excavation.

B. Sand shall be used for all copper and other service lines.

C. In the case of a “dry” installation, sand shall be used for PVC and ductile iron pipe where the bottom of the trench is located in the limestone zone.

D. In the case of a “wet” installation, pearock shall be used for PVC and ductile iron pipe where the bottom of the trench is located in the limestone zone.

E. Precast concrete items shall use crushed stone.

2.03 PEAROCK

A. Pearock shall consist of hard, durable particles of proper size and gradation, and shall be free from organic material, wood, trash, sand, loam, clay, excess fines, and other deleterious materials. Pearock shall conform to the requirements of ASTM C 33, Size Number 8, graded within the following limits:

Sieve Size	Percent Finer by Weight
1/2 inch	100
3/8 inch	85 to 100
No. 4	10 to 30
No. 8	0 to 10
No. 16	0 to 5

2.04 CRUSHED STONE (3/4-INCH ROCK)

A. Crushed stone shall consist of hard, durable, subangular particles of proper size and gradation, and shall be free from organic material, wood, trash, sand, loam, clay, excess fines, and other deleterious materials. Crushed stone shall conform to the requirements of ASTM C 33, Size Number 57, graded within the following limits:

Sieve Size	Percent Finer by Weight
1 1/2 inch	100
1 inch	95 to 100
1/2 inch	25 to 60
No. 4	0 to 10
No. 8	0 to 5

2.05 SAND

A. Sand shall be used for bedding polyvinyl chloride, fiberglass, HDPE and other plastic pipe when installed under dry trench conditions. Sand shall be graded sand with 100 percent passing a 3/8-inch sieve and not more than 5 percent passing a No. 200 sieve.

2.06 SELECT BACKFILL

A. Select Backfill: It is the intent of these specifications to obtain clean sandy material passing through a 3/4-inch sieve as select backfill material for utility and structural applications.

B. At locations where subsurface preparations for structures have been performed under this or other previous construction contracts, clean excavated material (structural fill) may be used as select backfill. Any excess fill shall be disposed of off-site by the Contractor.

2.07 GENERAL BACKFILL

A. General backfill (for grading applications) shall be placed above the select backfill. General backfill shall be clean granular soil, free of organics or other deleterious material, have a maximum size of 6 inches and shall contain no more that five percent fines passing a U.S. Standard No. 200 sieve.

B. General backfill used under roadways shall be compatible with the materials and compaction specified under the Sections entitled “Asphalt Pavement” and “Concrete Curb and Sidewalk”.

PART 3 – EXECUTION

3.01 EXCAVATION

A. The Contractor shall perform all excavation of every description and of whatever substance encountered, to the dimensions, grades and depths shown on the Drawings, or as directed. For projects within the treatment plant, all excavations shall be made by open cut unless shown otherwise on the Drawings. For projects within the right-of-way, unless shown otherwise on the Drawings, all excavations shall be made by open cut, except for service connections to houses located across the road from the watermain, where directional boring shall be used. All existing utilities such as pipes, poles and

structures shall be carefully located, supported and protected from injury; in case of damage, they shall be restored at the Contractor's expense.

B. Pipe trenches for piping shall be excavated to a width within the limits of the top of the pipe and the trench bottom so as to provide a clearance on each side of the pipe barrel, measured to the face of the excavation, or sheeting if used, of 8 inches to 12 inches. Where the pipe size exceeds 12 inches, the clearance shall be from 12 inches to 18 inches. All pipe trenches shall be excavated to a level where suitable material is reached, a minimum of 8 inches below the excavated depth that will allow for a minimum of 36-inches of covering unless otherwise indicated on the Drawings. Excavation depths in other types of materials and conditions shall be made as hereinafter specified.

C. In areas where trench widths are not limited by right-of-way and/or easement widths, property line restrictions, existing adjacent improvements, including pavements, structures and other utilities, and maintenance of traffic, the trench sides may be sloped to a stable angle of repose of the excavated material but only from a point one foot above the crown of the pipe. A substantially and safely constructed movable shield, "box" or "mule" may be used in place of sheeting when the trench is opened immediately ahead of the shield and closed immediately behind the shield as pipe laying proceeds inside the shield.

D. Ladders or steps shall be provided for and used by Workmen to enter and leave trenches, in accordance with OSHA requirements.

E. Excavation for appurtenances shall be sufficient to provide a clearance between their outer surfaces and the face of the excavation or sheeting, if used, of not less than 12 inches.

F. Excavated unsuitable material shall be removed from the site and disposed of by the Contractor. Materials removed from the trenches shall be stored and in such a manner that will not interfere unduly with any on-site operations, traffic on public roadways and sidewalks and shall not be placed on private property. In congested areas, such materials as cannot be stored adjacent to the trench or used immediately as backfill shall be removed to other convenient places of storage acceptable to the City at the Contractor's expense.

G. Excavated material that is suitable for use as backfill shall be used in areas where sufficient material is not available from the excavation. Suitable material in excess of backfill requirements shall be either used on the site as directed by the Engineer or disposed of the Contractor.

H. Barriers shall be placed at excavations in accordance with OSHA requirements.

3.02 SHEETING AND BRACING

A. The Contractor shall furnish, place and maintain sheeting and bracing to support sides of the excavation as necessary to provide safe working conditions in accordance with OSHA requirements, and to protect pipes, structures and other Work from possible damage. Where wood sheeting or certain designs of steel sheeting are used, the sheeting shall be cut off at a level of 2 feet above the top of the installed pipe and that portion below the level shall be left in place. If interlocking steel sheeting is used, it may be removed

providing removal can be accomplished without disturbing the bedding, pipe or alignment of the pipe. Any damage to the pipe bedding, pipe or alignment of the constructed utility caused by the removal of sheeting shall be cause for rejection of the affected portion of the work. The City may permit sheeting to be left in place at the request and expense of the Contractor, or the City may order him in writing to leave in place, for the preventing of damage to structures or property. Payment for sheeting ordered to remain in place shall be paid for at a negotiated price.

B. If the Engineer is of the opinion that at any point sufficient or proper supports, have not be provided, he may order additional supports put in at the Contractor's expense. The Contractor shall be responsible for the adequacy of all sheeting used and for all damage resulting from sheeting and bracing failure or from placing, maintaining and removing it.

3.03 REMOVAL OF WATER

A. General: It is a basic requirement of these Specifications unless otherwise authorized per Article 3.10 that excavations shall be free from water before pipe or structures are installed.

B. The Contractor shall provide pumps, and other appurtenant equipment necessary to remove and maintain water at such a level as to permit construction in a dry condition. The Contractor shall continue dewatering operations until backfilling has progressed to a sufficient depth over the pipe to prevent flotation or movement of the pipe in the trench or so that it is above the water table. If at any point during the dewatering operation it is determined that fine material is being removed from the excavation sidewalls, the dewatering operation shall be stopped. If any of the subgrade or underlying material is disturbed by movement of groundwater, surface water, or any other reason, it shall be replaced at the Contractor's expense with crushed stone or gravel.

C. The Contractor shall use dewatering systems that include automatic starting devices, and standby pumps that will ensure continuous dewatering in the event of an outage of one or more pumps.

D. Disposal: Water from the trenches and excavation shall be disposed of in such a manner as will not cause injury to public health, to public or private property, to the Work completed or in progress, to the surface of the streets, cause any interference with the use of the same by the public, or cause pollution of any waterway or stream. The Contractor shall submit his proposed methods of handling trench water and locations at which the water will be disposed of to the Engineer for review and shall receive acceptance before starting the excavation. Disposal to any surface water body will require silt screens to prevent any degration in the water body. The Contractor shall have responsibility for acquiring all necessary permits for disposal.

3.04 TRENCH STABILIZATION

A. No claim for extras, or additional payment will be considered for cost incurred in the stabilization of trench bottoms which are rendered soft or unstable as a result of construction methods, such as improper or inadequate sheeting, dewatering or other causes. In no event shall pipe be installed when such conditions exist and the Contractor shall correct such conditions so as to provide proper bedding or foundations for the proposed installation at no additional cost to the City before placing the pipe or structures.

3.05 PIPE BEDDING

A. Pipe trenches shall be excavated as described in Article 3.01. The resulting excavation shall be backfilled with acceptable pipe bedding material, up to the level of the centerline of the proposed pipe barrel. This backfill shall be tamped and compacted to provide a proper bedding for the pipe and shall then be shaped to receive the pipe. Bedding shall be provided under the branch of all fittings to furnish adequate support and bearing under the fitting.

B. Any over excavation below the levels required for installation of the pipe shall be backfilled with acceptable bedding material, tamped, compacted and shaped to provide proper support for the proposed pipe, at the Contractor's expense.

3.06 BACKFILL

A. Pipeline trenches shall be backfilled to a level 12 inches above the top of the pipe with select backfill obtained from the trench excavation. When placed in the dry, such material shall be placed in 6-inch layers, each compacted to the densities specified in Article 3.07. Only hand operated mechanical compacting equipment shall be used within six inches of the installed pipe.

B. After the initial portion of backfill has been placed as specified above, and after all excess water has completely drained from the trench, backfilling of the remainder of the trench may proceed. The remainder of the backfill shall be selected material obtained from the excavation and shall be placed in horizontal layers, the depth of which shall not exceed the ability of the compaction equipment employed, and in no event shall exceed a depth of 9 inches. Each layer shall be moistened, tamped, puddled, rolled or compacted to the densities specified in Article 3.07.

3.07 COMPACTION AND DENSITIES

A. Compaction of backfill shall be 98 percent of the maximum density where the trench is located under structures or paved areas, and 95 percent of the maximum density elsewhere per ASTM D 1557. More thorough compaction may be required when Work is performed in other regulatory agencies jurisdictions, such as the FDOT. Methods of control and testing of backfill construction are:

1. Maximum density of the material in trenches shall be determined by ASTM D 1557.

2. Field density of the backfill material in place shall be determined by ASTM D 1556 or D 2922.

B. Testing: Laboratory and field density tests, which in the opinion of the Engineer are necessary to establish compliance with the compaction requirements of these Specifications, shall be ordered by the Engineer. The Contractor shall coordinate and cooperate with the testing laboratory. The testing program will be implemented by the Engineer establishing depths and locations of tests. Modifications to the program will be made as job conditions change.

C. Trench backfill which does not comply with the specified densities, as indicated by such tests, shall be reworked and recompacted until the required compaction is secured, at no

additional cost to the City. The costs for retesting such Work shall be paid for by the Contractor.

3.08 ADDITIONAL EXCAVATION AND BACKFILL

A. Where organic material, such as roots, muck, or other vegetable matter, or other material which, in the opinion of the Engineer, will result in unsatisfactory foundation conditions, is encountered below the level of the proposed pipe bedding material, it shall be removed to a depth of two feet below the outside bottom of the pipe or to a greater depths as directed by the Engineer and removed from the site. Sheeting shall be installed if necessary to maintain pipe trenches within the limits identified by the Engineer. The resulting excavation shall be backfilled with suitable backfill material, placed in 12-inch layers, tamped and compacted up to the level of the bottom of the proposed pipe bedding material. Sufficient compaction of this material shall be performed to protect the proposed pipe against settlement. Lean concrete may be used in lieu of backfill when pipe installation is in the wet or at the Contractor's option. Construction shall then proceed in accordance with the provisions of Article 3.05 "Pipe Bedding".

B. Additional excavation (more than two feet below the pipe) shall be performed when ordered by the Engineer. Where organic or other material is encountered in the excavation, the Contractor shall bring the condition to the attention of the Engineer and obtain his determination as to whether or not the material will require removal, prior to preparing the pipe bedding. The excavation of material up to a depth of two feet below the outside bottom is an incidental item of construction and the Work shall be done at no additional cost to the City. Where ordered by the Engineer, excavation greater than two feet below the pipe and additional backfill will be compensated by the City.

3.09 FINE GRADING

A. After piping trenches backfilled, the disturbed areas of the site shall be fine graded. Any lumber, undesirable materials and rocks larger than the 3-inch size shall be removed from the surface. The completed surface shall be to the preconstruction elevation unless otherwise directed by the City. Minor adjustments to line and grade may be required as the work progresses in order to satisfy field conditions.

3.10 ALTERNATE METHOD OF CONSTRUCTION

A. Use of This Method: A combination of conditions in the substrate, water table, or method of disposal may be encountered during the course of the work which makes dewatering impossible, or only possible through the use of unusual methods, the cost of which is excessive. When such conditions are encountered, but only after all reasonable means (pumps, well points, etc.) to dewater the excavation have been employed without success, the Contractor, may request to employ the following Alternate Method of Construction. The concurrence of the Engineer shall be obtained in writing and shall limit the use of the alternate method of construction to such specific portions of the Work as the Engineer shall determine.

B. The requirements set forth in other sections of these Specifications shall establish the required standards of construction quality for this work. Use of the alternate method of construction described hereinafter shall in no way be construed as relieving the Contractor of the work. No additional payment will be made to the Contractor for

excavation, backfill, sheeting or any cost incurred for Work or materials, or any other costs incurred as a result of the use of this alternate method of construction. The prices established in the Proposal shall be for full payment for the various items of work.

C. Subject to all the requirements stated herein, including written acceptance of the Engineer, construction will be permitted in accordance with the following specifications. All requirements of these Specifications shall apply to this construction unless otherwise specifically modified herein.

D. Removal of Water: The installation of pipe and appurtenances under water will be permitted and the requirements of Article 3.03 will be waived.

E. Excavation shall be performed in accordance with Article 3.01.

F. Pipe Bedding: Pipe bedding shall be placed from 6 inches below the outside bottom of the proposed pipe barrel up to the centerline of the pipe barrel. The bedding material shall be pearock as specified in Article 2.03 "Pearock". Limerock screenings, sand or other fine organic material shall not be used.

G. The bedding material shall be placed and then be shaped to receive the pipe at the intended elevation. Bedding shall be provided under the branch of all fittings to furnish adequate support and bearing under the fitting.

H. Backfill: After the pipe is installed, backfilling shall proceed in accordance with the provisions of Article 3.06 "Backfill" and 3.07 "Compaction and Densities". Select backfill material shall be used to backfill around the pipe and to a level one foot above the crown of the pipe. Under no circumstances will material other than select backfill or specified pipe bedding material be considered satisfactory for this purpose.

I. If the Alternate Method of Construction is used, all backfill material, including specified pipe bedding material, shall be carefully lifted into the trench and not released to fall freely therein until the bucket or container is at or just above water level. Under no circumstances will backfill material be dumped or pushed into the trenches containing water. Below existing water level, the backfill material shall be carefully rammed into place in uniform layers, of equal depth on each side of the pipe, up to the water level. Above the water level, backfill material shall be placed and compacted for normal backfill as previously specified.

3.09 RESTORATION OF EXISTING SURFACES

A. Restore all grassed areas disturbed by the trenching operations by resodding in accordance with the Section entitled “Sodding” or the Section entitled “Landscaping”.

B. Restore all asphaltic concrete pavement areas disturbed by the trenching operations in accordance with the Section entitled “Asphalt Pavement.”

- END OF SECTION -

SECTION 02224

EXCAVATION AND BACKFILL FOR STRUCTURES

PART 1 – GENERAL

1.01 THE REQUIREMENT

A. Furnish all labor, equipment and materials required to complete all work associated with excavation, including off-site borrow excavation, dewatering, backfill, foundation and backfill stone, stockpiling topsoil and any excess suitable material in designated areas, backfill and subgrades beneath foundations, excavation support, disposing from the site all unsuitable materials, providing erosion and sedimentation control grading, preparation of structure subgrade, and other related and incidental work as required to complete the work shown on the Drawings and specified herein.

B. All excavations shall be in conformity with the lines, grades, and cross sections shown on the Drawings or established by the Engineer.

C. It is the intent of this Specification that the Contractor conduct the construction activities in such a manner that erosion of disturbed areas and off-site sedimentation be absolutely minimized.

1.02 RELATED WORK SPECIFIED ELSEWHERE

A. Requirements of related work are included in Division 1 and Division 2 of these Specifications.

1.03 REFERENCE SPECIFICATIONS, CODES, AND STANDARDS

A. Without limiting the generality of the other requirements of the Specifications, all work herein shall conform to the applicable requirements of the following documents. All referenced Specifications, codes, and standards refer to the most current issue available at the time of Bid.

1. Florida Department of Transportation Standard Specifications for Road and Bridge Construction, latest edition.

2. American Society for Testing and Materials (ASTM):

   a. ASTM C 127 — Test for Specific Gravity and Absorption of Coarse Aggregate.

   b. ASTM C 136 — Test for Sieve Analysis of Fine and Coarse Aggregates.

   c. ASTM D 422 — Particle Size Analysis of Soils.

   d. ASTM D 423 — Test for Liquid Limit of Soils.

   e. ASTM D 424 — Test for Plastic Limit and Plasticity Index of Soils.

f. ASTM C 535 Test for Resistance to Degradation of Large Size Coarse Aggregate by Abrasion and Impact in the Los Angeles Machine.

g. ASTM D 698 Standard Method of Test for the Moisture Density Relations of Soils Using a 5.5 lb. (2.5 kg) Rammer and a 12 inch (305 mm) Drop.

h. ASTM D1556 Test for Density of Soil in Place by the Sand Cone Method.

i. ASTM D1557 Test for Moisture Density Relations of Soils and Soil Aggregate Mixtures Using 10 lbs. (4.5 kg) Rammer and 18 inch (457 mm) Drop.

j. ASTM D2049 Test Method for Relative Density of Cohesionless Soils.

k. ASTM D2167 Method. Test for Density of Soil in Place by the Rubber Balloon

l. ASTM D2216 Test for Laboratory Determination of Water (Moisture) Content of Soil, Rock, and Soil Aggregate Mixtures.

m. ASTM D2487 Test for Classification of Soils for Engineering Purposes.

n. ASTM D6938 Standard Test Method for In-Place Density and Water Content of Soil and Soil Aggregate by Nuclear Methods (Shallow Depth).

1.04 SUBSURFACE CONDITIONS

A. Information on subsurface conditions is referenced under Division 1, General Requirements.

B. A Separate geotechnical report is included as an Appendix as a reference for information purposes. The report identifies properties below grade and also offer recommendations for foundation design, primarily for use of the Engineer. The recommendations shall not be construed as requirements of the Contract unless specifically referenced by the Contract Documents.

C. The Owner and/or the Engineer will not assume responsibility for variations of sub-soil quality or conditions at locations other than places shown and at the time the geotechnical investigation was made. The Contractor shall examine the site and review the available geotechnical boring logs or undertake its own subsurface investigation prior to submitting his bid, taking into consideration all conditions that may affect his work.

D. The Contractor shall satisfy himself as to the character and amount of different soil materials, groundwater and the subsurface conditions to be encountered in the work to be performed. Information and data, when furnished, are for the Contractor's general information. However, it is expressly understood that any interpretation or conclusion drawn there from is totally the responsibility of the Contractor. Engineer and Owner assume no liability for the accurateness of the data reported. No claim for extra

compensation or for extension of time will be allowed on account of subsurface conditions inconsistent with Contractor's assumptions.

E. Attention is directed to the fact that there may be water pipes, storm drains and other utilities located in the area of proposed excavation. Locate existing underground utilities in areas of work. Test pits and hand excavation in critical areas will be required prior to initiating work. Perform all repairs to same in the event that excavation activities disrupt service.

F. All existing utilities including piping, electrical conduits, electrical duct banks and telephone cables that are shown on the Contract Documents to be relocated, shall be relocated prior to initiating earthwork. The Contractor shall coordinate relocation of utilities with utility companies having jurisdiction in the area. Should unknown or incorrectly identified piping or other utilities be encountered during excavation, the Contractor shall consult the Owner and the Engineer immediately for directions.

G. The Contractor shall cooperate with the Owner and utility companies in keeping respective services and facilities in operation.

1.05 SUBMITTALS

A. In accordance with the procedures and requirements set forth in Section 01300 - Submittals, the Contractor shall submit the following:

1. Name and location of all material suppliers.

2. Certificate of compliance with the standards specified above for each source of each material.

3. List of disposal site for waste and unsuitable materials and all required permits for use of those sites.

4. Plans and cross sections of open cut excavations showing side slopes and limits of the excavation at grade.

5. Construction drawings and structural calculations for any types of excavation support required. Drawings and calculations shall be signed and sealed by a currently registered Professional Engineer in the State of Florida.

6. Monitoring plan and pre-construction condition inspection and documentation of all adjacent structures, utilities, and roadways near proposed installation of excavation support systems.

7. Dewatering procedures: The Contractor shall submit his proposed methods of handling groundwater and the locations at which the water will be disposed of. Methods shall be acceptable to the Engineer before starting and excavating. Contractor shall submit plans showing the methods and location of dewatering and discharge. The drawings shall include a sufficient number of detailed sections to clearly illustrate the Scope of Work. The Drawings showing all of the above information, including calculations, shall be prepared by a qualified Professional Engineer registered in the State of Florida, and shall bear its seal and signature. If required by regulatory agencies, a copy of the dewatering permit shall be submitted.

8. The Contractor shall notify the Engineer of the off site and on-site sources of structural fill and submit to the Engineer a representative sample weighing approximately 50 lbs. The sample shall be delivered to a designated location on site.

9. Prior to any earthwork, the Contractor shall submit a sieve analysis of the proposed structural fill to Engineer for review and approval.

10. The Contractor shall not place any foundation reinforcement steel until excavations have been tested for compaction.

11. The Contractor shall apply for and obtain all necessary permits for dewatering as necessary. Contractor shall be responsible for all permit fees.

1.06 QUALITY CONTROL

A. All soils testing shall be performed by an independent testing laboratory as specified in Section 01400 entitled "Quality Control". The Contractor shall schedule his Work so as to permit a reasonable time for testing before placing succeeding lifts of backfill and shall keep the laboratory informed of his progress. In the event any test shows the work is not in conformance with these Contract Documents, the cost of any subsequent testing to show conformance shall be borne by the Contractor. All test results shall be sent directly to the Engineer.

1.07 PRODUCT HANDLING

A. Soil and rock material shall be excavated, transported, placed, and stored in a manner so as to prevent contamination, segregation and excessive wetting. Materials which have become contaminated or segregated will not be permitted in the performance of the work and shall be removed from the site.

1.08 GROUNDWATER

A. The Contractor shall be responsible for anticipating groundwater conditions and shall provide positive control measures as required. Such measures shall ensure construction in the dry, stability of excavations, groundwater pressure control, prevention of tanks, pipes, and other structures from being lifted by hydrostatic pressures, and avoiding the disturbance of subgrade bearing materials.

1.09 USE OF EXPLOSIVES

A. The use of explosives for excavation work is strictly prohibited on this project.

1.10 PROTECTION OF PROPERTY AND STRUCTURES

A. The Contractor shall, at his own expense, sustain in place and protect from direct or indirect injury, all pipes, poles, conduits, walls, buildings, and all other structures, utilities, and property in the vicinity of his work. The Contractor shall take all risks attending the presence of proximity of pipes, poles, conduits, walls, buildings, and all other structures, utilities, and property in the vicinity of his work. He shall be responsible for all damage, and assume all expenses, for direct or indirect injury and damage, caused by his work, to

any such pipe, structures, etc., or to any person or property, by reason of injury to them, whether or not such structures, etc., are shown on the Drawings.

PART 2 – PRODUCTS

2.01 SELECT FILL

A. Soils from the excavations meeting requirements stipulated herein with the exceptions of topsoil and organic material may be used as select fill for backfilling and as structural subgrade support. All fill material shall be provided by the Contractor from any excess suitable on-site material or from offsite sources, all subject to review by the Engineer prior to use. The Contractor must determine the volume of material required for the site.

B. Select fill used for backfill shall be noncohesive, nonplastic, granular mixture of local sand and limerock, shall be free from vegetation, organic material or muck, and shall contain not more than 8 percent material by weight which passes the No. 200 sieve. Broken concrete shall not be used in the fill. Fill material containing limerock shall have sufficient sand to fill the voids in the limerock, and no individual rocks or pieces or hard material that will not pass a 3-inch diameter ring shall be used in the fill. Maximum Plasticity Inces (PI) shall be 6. Backfill against walls shall not contain any rock larger than ½-inch.

C. Select fill used under structures (structural fill) shall be furnished from off-site or on-site sources as required. Structural fill material shall be clean sand or sand and rock free from vegetation, organic material, muck, or other deleterious matter. Not more than 10 percent by weight shall pass the No. 200 sieve and shall have a Unified Soil Classification System designation of GP, GW, GP-GM, GW-GM, SP, SW, SP-SM, or SW-SM. All rock shall pass through a 3 inch diameter ring. Broken Portland cement or asphaltic concrete will not be considered an acceptable fill material. Unsuitable Fill Material: Classified as A-2-4, A-2-5, A-2-6, A-2-7, A-4, A-5, A-6, A-7, and A-8 in accordance with AASHTO Designation M 145. Peat and other highly organic soils are also unsuitable as structural fill.

D. Crushed limestone placed below foundation slabs shall be hard, durable, subangular particles of proper size and gradation, and shall be free from organic materials, wood, trash, sand, loam, chalk, excess fines and other deleterious materials. Maximum aggregate size shall be ¾ inches.

E. Regardless of material used as select fill, materials shall be compacted at a moisture content satisfactory to the Engineer, which shall be approximately that required to produce the maximum density except that the moisture content shall not be more than 2% below nor more than 2% above the optimum moisture content for the particular material tested in accordance with the ASTM D1557.

F. Where excavated material does not meet requirements for select fill, Contractor shall furnish off-site borrow material meeting the specified requirements herein.

2.02 CLEAN SAND

A. Clean sand for use in backfilling shall be furnished from off-site or on-site sources as required. Material shall be clean sand free from vegetation, organic material, muck, or other deleterious material. Not more than 10 percent by weight shall pass the No. 200

sieve and shall have a classification of A-3 in accordance with AASHTO Designation M 145.

PART 3 – EXECUTION

3.01 STRIPPING OF TOPSOIL

A. In all areas to be excavated, filled, paved, or graveled, the topsoil shall be stripped to its full depth and shall be deposited in storage piles on the site, at locations designated by the Engineer, for subsequent reuse. Remove all tree stumps, concentration of roots and other deleterious materials. Topsoil shall be kept separated from other excavated materials and shall be piled free of roots and other undesirable materials.

3.02 EXCAVATION

A. Highly organic soils (peat or muck), weak silty materials, asphalt and concrete shall be removed from all foundation areas. In addition, all sandy silt zones shall be completely removed from mat foundation areas. Unsuitable material within structure footprints shall be over-excavated and backfilled with structural fill.

B. As a minimum, excavations shall be carried 5-feet outside slab or footing limits or by one foot for each foot excavated below the bearing grade of the mat or footing, whichever is less, unless noted otherwise.

C. All material excavated, regardless of its nature or composition, shall be classified as UNCLASSIFIED EXCAVATION. Excavation shall include the removal of all soil, rock, weathered rock, rocks of all types, boulders, conduits, pipe, and all other obstacles encountered and shown to be removed within the limits of excavation shown on the Drawings or specified herein. No additional payment will be made for the removal of obstacles encountered within the excavation limits shown on the Drawings and specified herein.

D. Excavated unsuitable material shall be removed from the site and disposed of by the Contractor.

E. All suitable material removed in the excavation shall be used as far as practicable in the formation of embankments, subgrades, and shoulders, and at such other places as may be indicated on the Drawings or indicated by the Engineer. No excavation shall be wasted except as may be permitted by the Engineer. Refer to the drawings for specific location and placement of suitable excavated materials in the formation of embankments, backfill, and structural and roadway foundations. THE ENGINEER WILL DESIGNATE MATERIALS THAT ARE UNSUITABLE. The Contractor shall furnish off-site disposal areas for the unsuitable material and shall dispose of unsuitable material at such areas. Where suitable materials containing excessive moisture are encountered above grade in cuts, the Contractor shall construct above grade ditch drains prior to the excavation of the cut material when in the opinion of the Engineer such measures are necessary to provide proper construction.

F. All excavations shall be made in the dry and in such a manner and to such widths as will give ample room for properly constructing and inspecting the structures and/or piping they are to contain and for such excavation support, pumping and drainage as may be required.

Excavation shall be made in accordance with the grades and details shown on the Drawings and as specified herein.

G. Excavation slopes shall be flat enough to avoid slides that will cause disturbance of the subgrade or damage of adjacent areas. Excavation requirements and slopes shall be as indicated in the Drawings or as specified herein. The Contractor shall intercept and collect surface runoff both at the top and bottom of cut slopes. The intersection of slopes with natural ground surfaces, including the beginning and ending of cut slopes, shall be uniformly rounded as shown on the Drawings or as may be indicated by the Engineer. Concurrent with the excavation of cuts the Contractor shall construct intercepting berm ditches or earth berms along and on top of the cut slopes at locations shown on the Drawings or designated by the Engineer. All slopes shall be finished to reasonably uniform surfaces acceptable for seeding and mulching operations. No rock or boulders shall be left in place which protrude more than 1 foot within the typical section cut slope lines, and all rock cuts shall be cleaned of loose and overhanging material. All protruding roots and other objectionable vegetation shall be removed from slopes. The Contractor shall be required to submit plans of open cut excavation for review by the Engineer before approval is given to proceed.

H. The bottom of all excavations for structures and pipes shall be examined by the Engineer for the presence of unsuitable material. If, in the opinion of the Engineer, additional excavation is required due to the in place soils being soft, yielding, pumping and wet, the Contractor shall remove such material to the required width and depth and replace it with thoroughly compacted select fill, and/or crushed stone or screened gravel as indicated by the Engineer. No payment will be made for subgrade disturbance caused by inadequate dewatering or improper construction methods.

I. All cuts shall be brought to the grade and cross section shown on the Drawings, or established by the Engineer, prior to final inspection and acceptance by the Engineer.

J. Slides and overbreaks which occur due to negligence, carelessness or improper construction techniques on the part of the Contractor shall be removed and disposed of by the Contractor as indicated by the Engineer at no additional cost to the Owner. If grading operations are suspended for any reason whatsoever, partially completed cut and fill slopes shall be brought to the required slope and the work of seeding and mulching or other required erosion and sedimentation control operations shall be performed.

K. Where the excavation exposes sludge, sludge contaminated soil or other odorous materials, the Contractor shall cover such material at the end of each workday with a minimum of 6 inches and a maximum of 24 inches of clean fill. The work shall be an odor abatement measure and the material shall be placed to the depth deemed satisfactory by the Engineer for this purpose.

L. The Contractor shall ensure that its excavation work does not adversely affect the bearing capacity of the structural subsurface. Also, the Contractor shall proceed with foundation work immediately after excavation work and as expeditiously as possible so as to minimize any potential for subsurface disturbance due to environmental factors, adverse weather, etc. The Contractor shall also take all necessary precautions to protect its work from potential adverse impacts. Where excavated areas are disturbed by subsequent operations or adverse weather, scarify surface, reshape, fill as required and compact to required density.

3.03 UNAUTHORIZED EXCAVATION

A. Excavation Work carried outside of the Work limits required by the Contract Documents shall be at the Contractor's expense, and shall be backfilled by the Contractor at his own expense with suitable material, as directed by the Engineer. Where, in the judgment of the Engineer, such over excavation requires use of lean concrete or crushed stone, the Contractor, at his expense shall furnish and place such materials.

3.04 EXCAVATION SUPPORT

A. The Contractor shall furnish, place, and maintain such excavation support which may be required to support sides of excavation or to protect pipes and structures from possible damage and to provide safe working conditions. Excavation for deep structures shall be sufficient to provide a clearance between their outer surfaces and the face of the excavation, excavation support, or bracing, of not less than 3 feet. Materials encountered in the excavation which have a tendency to slough or flow into the excavation, undermine the bank, weaken the overlying strata, or are otherwise rendered unstable by the excavation operation shall be retained by an excavation support, stabilization, grouting or other acceptable methods. If the Engineer is of the opinion that at any point sufficient or proper supports have not been provided, he may order additional supports put in at the expense of the Contractor. The Contractor shall be responsible for the adequacy of all supports used and for all damage resulting from failure of support system or from placing, maintaining and removing it.

B. Selection of and design of any proposed excavation support systems is exclusively the responsibility of the Contractor. Excavation support shall comply with all applicable OSHA requirements. Contractor shall submit drawings and calculations on proposed systems sealed by a Professional Engineer currently registered in the State of Florida.

C. The Contractor shall exercise caution in the installation and removal of supports to insure that excessive or unusual loadings are not transmitted to any new or existing structure. The Contractor shall promptly repair at his expense any and all damage that can be reasonably attributed to installation or removal of excavation support system.

D. Contractor shall monitor movement in the excavation support systems as well as movement at adjacent structures, utilities and roadways near excavation supports. Contractor shall submit a monitoring plan developed by the excavation support design engineer. All pre-construction condition assessment and documentation of adjacent structures on-site and off-site shall be performed by the Contractor. If any sign of distress such as cracking or movement occurs in any adjacent structure, utility or roadway during installation of supports, subsequent excavation, service period of supports, subsequent backfill and construction, or removal of supports, Engineer shall be notified immediately. Contractor shall be exclusively responsible for any damage to any roadway, structure, utility, pipes, etc. both on-site and off-site, as a result of his operations.

E. All excavation supports shall be removed upon completion of the work except as indicated herein. The Engineer may permit supports to be left in place at the request and expense of the Contractor. Any excavation supports left in place shall be cut off at least two (2) feet below the finished ground surface or as directed by the Engineer.

3.05 PROTECTION OF SUBGRADE

A. To minimize the disturbance of bearing materials and provide a firm foundation, the Contractor shall comply with the following requirements:

1. Use of heavy rubber tired construction equipment shall not be permitted on the final subgrade unless it can be demonstrated that drawdown of groundwater throughout the entire area of the structure is at least 3 feet below the bottom of the excavation (subgrade). Even then, the use of such equipment shall be prohibited should subgrade disturbance result from concentrated wheel loads.

2. Subgrade soils disturbed through the operations of the Contractor shall be excavated and replaced with compacted select fill or crushed stone at the Contractor's expense as indicated by the Engineer.

3.06 PROOFROLLING

A. Proof-rolling of in-place granular soils shall be performed on the subgrade of all structures and all areas that will support select fill. Surface area to be proof-rolled shall extend 5 feet out from the footing perimeter. After stripping of topsoil, excavation to subgrade and prior to placement of fills, the exposed subgrade shall be carefully inspected by probing and testing as needed. Any topsoil or other organic material still in place, frozen, wet, soft, or loose soil, and other undesirable materials shall be removed. Each section of subgrade shall be subjected to multiple, overlapping (minimum of 20 percent overlap) coverages of the compactor. Proof-rolling shall continue to check for pockets of soft material hidden beneath a thin crust of better soil and until no further vertical settlement of the surface is visually discernable. Any unsuitable materials thus exposed shall be removed and replaced with an approved compacted material. Groundwater shall be maintained at least 30 inches below the work area.

3.07 DEWATERING

A. The Contractor shall do all dewatering as required for the completion of the work. Procedures for dewatering proposed by the Contractor shall be submitted to the Engineer for review prior to any earthwork operations. Disposal of water to any surface water body will require silt screens. All water removed by dewatering operations shall be disposed of in accordance with the Florida Air and Water Pollution Control Act. The Contractor is responsible for obtaining any dewatering permits as required by regulatory agencies.

B. The dewatering system shall be of sufficient size and capacity as required to control groundwater or seepage to permit proper excavation operations, embankment construction and reconstruction, subgrade preparation, and to allow concrete to be placed in a dry condition except where authorized tremie concrete construction work is shown or permitted. The system shall include a sump system or other equipment, appurtenances and other related earthwork necessary for the required control of water, and shall include automatic starting devices and standby pumps that will ensure continuous dewatering in the event of an outage of one or more pumps. The Contractor shall drawdown groundwater to at least 30 inches below the bottom of excavations (subgrade) at all times in order to maintain a dry and undisturbed condition. The groundwater level shall be controlled so as to permit the placing and curing of concrete and the maintenance of

supporting foundations and adjacent work and structures. The Contractor is fully responsible for protecting structures from flotation until final acceptance of the work.

C. The Contractor shall control, by acceptable means, all water regardless of source. Water shall be controlled and its disposal provided for at each berm, structure, etc. The entire periphery of the excavation areas shall be ditched and diked to prevent water from entering the excavation. The Contractor shall be fully responsible for disposal of the water and shall provide all necessary means at no additional expense to the Owner. The Contractor shall be solely responsible for proper design, installation, proper operation, maintenance, and any failure of any component of the system.

D. The Contractor shall be responsible for and shall repair without cost to the Owner, any damage to work in place and the excavation, including damage to the bottom due to heave and including removal of material and pumping out of the excavated area. The Contractor shall be responsible for damages to any other area or structure caused by his failure to maintain and operate the dewatering system proposed and installed by the Contractor.

E. The Contractor shall take all the steps that he considers necessary to familiarize himself with the surface and subsurface site conditions, and shall obtain the data that is required to analyze the water and soil environment at the site and to assure that the materials used for the dewatering systems will not erode, deteriorate, or clog to the extent that the dewatering systems will not perform properly during the period of dewatering. Copies of logs of borings and laboratory test results are available to the Contractor. This data is furnished for information only, and it is expressly understood that the Owner and Engineer will not be held responsible for any interpretations or conclusions drawn therefrom by the Contractor.

F. Prior to the execution of the work, the Contractor, Owner and Engineer shall jointly survey the condition of adjoining structures. Photographs and records shall be made of any prior settlement or cracking of structures, pavements, and the like, that may become the subject of possible damage claims.

G. If a surface to receive foundation slabs cannot be maintained dry by the Contractor's dewatering efforts, the Contractor shall provide tremie seals at no additional cost to the Owner. The placement of tremie seals shall not preclude dewatering operations specified herein. The limits of tremie seals shall be recommended by the Contractor and reviewed and accepted by the Engineer.

3.08 BACKFILLING

A. All structures shall be backfilled with the type of materials shown on the Drawings and specified herein. Select fill shall be deposited in successive, uniform, approximately horizontal layers not exceeding 12 inches in loose lifts for the full width. Compaction shall be in accordance with the requirements of Paragraph 3.09, COMPACTION.

B. Where excavation support is used, the Contractor shall take all reasonable measures to prevent loss of support beneath and adjacent to pipes and existing structures when supports are removed. If significant volumes of soil cannot be prevented from clinging to the extracted supports, the voids shall be continuously backfilled as rapidly as possible. The Contractor shall thereafter limit the depth below subgrade that supports will be installed in similar soil conditions or employ other appropriate means to prevent loss of support.

C. Backfill against concrete or masonry structure shall not be performed until the Work has been reviewed and backfilling permitted. Backfill against walls shall also be deferred until the structural slab for floors above the top fill line have been placed and attained design strength or earlier at the discretion of the Engineer. Partial backfilling against adequately braced wall may be considered by the Engineer on an individual situation basis. Where walls are to be waterproofed, all Work shall be completed and membrane materials dried or cured according to the manufacturer's instructions before backfilling.

D. Backfill against tanks and other structures which are to retain liquids shall not be performed until leakage tests are completed and accepted by the Engineer in accordance with the Section 02667 - Water Tightness Testing.

3.09 COMPACTION

A. The Contractor shall compact embankments, backfill, crushed stone, aggregate base, and in place subgrade in accordance with the requirements of this Section. The densities specified herein refer to percentages of maximum density as determined by the noted test methods. Compaction of materials on the project shall be in accordance with the following schedule:

	Density % Mod. Proctor (D1557)	**Max. Lift Thickness as Compacted Inches**
Backfill Around Structures	98	8
Backfill Beneath Structures	98	8
Crushed Stone Beneath Structures	**	12
Select Sand	98	8
Crushed Stone Backfill	**	12
In place Subgrade Beneath Structures	95	Top 24-inches

** *The aggregate shall be compacted to a degree acceptable to the Engineer by use of a vibratory compactor and/or crawler tractor.*

B. Compaction shall be conducted as follows:

1. A vibratory compactor that imparts a dynamic force of not less than 44,000 pounds shall be used. Each section of subgrade shall be subjected to multiple, overlapping (minimum 20% overlap) coverages of the compactor as it operates at normal walking speed. Vibratory equipment shall not be used within 25 feet of any existing structure.

2. Within 25 feet of any existing structure, non-vibratory compaction equipment such as a drum roller with a maximum weight of 4 tons should be used. Within 5 feet of any existing structure, a walk behind vibratory sled or roller shall be used. A sufficient number of passes should be made within the construction area to compact the in-place soil as required in Article 3.09 A above.

C. Field density tests will be made by independent testing agency as described in Article 1.06. These tests shall be the basis for accepting or rejecting the compaction. In-place density tests will be performed in accordance with ASTM D 1556, ASTM D 2167, or ASTM

D 6938. The Engineer will be the sole judge as to which test method will be the most appropriate. Failure to achieve the specified densities shall require the Contractor to re compact the material or remove it as required. The Contractor shall, if necessary, increase his compactive effort by increasing the number of passes, using heavier or more suitable compaction equipment, or by reducing the thickness of the layers. The Contractor shall adjust the moisture contents of the soils to bring them within the optimum range by drying them or adding water as required.

D. Testing will be performed as frequently as deemed necessary by the Engineer. As a minimum, one in place density test shall be performed for each 1000 cubic yards of embankment placed, 500 cubic yards of backfill placed, 2500 square feet of foundation area, or one test performed each day for either.

E. Final grades shall be within 0.1 foot of elevations shown. Where shown on the Drawings surfaces shall be sloped for drainage or other purposes.

F. Vibration monitoring shall be performed at nearby structures when compaction work is ongoing. A single monitoring point using vibration monitoring equipment capable of detecting velocities of 0.1 inch/second or less and survey measurements shall be used for vibration monitoring at each of the nearest structures. An elevation measurement on nearby structures shall be taken before compaction work starts, and then at least twice a day during the work with one reading taken at the conclusion of the day's operations. Elevation measurements shall be recorded to an accuracy of 0.001 foot. If at any time the Contractor detects settlement or heave of 0.005-feet or more, or vibration levels of 0.5 inch/second or more, the vibratory compaction shall be stopped immediately and the Engineer notified.

3.10 REMOVAL OF EXCESS AND UNSUITABLE MATERIALS

A. The Contractor shall remove and dispose of off-site all unsuitable materials. Within thirty (30) consecutive days after Notice to Proceed, the Contractor shall submit to the Engineer for review all required permits and a list of disposal sites for the unsuitable materials. If the disposal site is located on private property, the submittal shall also include written permission from the owner of record.

B. All unsuitable materials shall be disposed of in locations and under conditions that comply with federal, state and local laws and regulations.

C. The Contractor shall obtain an off-site disposal area prior to beginning demolition or excavation operations.

D. All excess and unsuitable materials shall be hauled in trucks of sufficient capacity and tight construction to prevent spillage. Trucks shall be covered to prevent the propagation of dust.

E. When all excess and unsuitable material disposal operations are completed, the Contractor shall leave the disposal sites in a condition acceptable to the Owner and Owner(s) of the disposal site(s).

- END OF SECTION -

SECTION 02240

DEWATERING

PART 1 – GENERAL

(NOT USED)

PART 2 – MATERIALS

(NOT USED)

PART 3 – EXECUTION

3.01 GENERAL

A. The Contractor shall be responsible for design, installation, and operation of a dewatering system to dewater specified excavations.

1. The dewatering system shall be designed in accordance with the Best Management Practices (BMP's) adopted by FDEP.
2. Inspection and control of dewatering system operations will be in accordance with the FDEP guidelines established in the Florida Erosion and Sediment Control Inspector's Manual (current edition).

B. Continuously manage and control excavation water recharge in order to facilitate and not impede construction activities at all times, including weekends, holidays, and during periods of work stoppages, and furnish and install, and operate, a contingency backup dewatering system to maintain control of excavation water levels to facilitate construction (i.e.; no construction delays).

3.02 SUBMITTALS

A. Submittals shall be made in accordance with the requirements specified in Contract Documents and the requirements of this Section.

B. Provide name, address, and phone numbers of all subcontractors.

C. The Contractor shall submit a Dewatering Best Management Practices (BMP) Plan prior to the start of excavation expected to include dewatering operations. The Plan shall provide detailed descriptions of dewatering procedures to be utilized to meet the requirements of this Section. Methodologies to control dewatering discharge contamination include, but are not limited to:

1. Holding tanks of adequate size and volume.
2. Wellpoint systems.
3. Sump pumping systems.

4. Chemical precipitation of particulates.

5. Filter systems and siltation controls.

6. Outfall booms.

D. The Contractor shall provide a Site Health and Safety Plan and Activity Hazard Analysis (AHA) for contaminated soil as specified in the Contract Documents and/or groundwater as specified in this Section, to include the following:

1. A written description of the proposed method for temporary stockpiling, transportation, and disposal of all wastes.

2. Copy of permits of disposal facilities.

3. Certification of disposal of all wastes.

4. Directions to the nearest hospital and phone number.

5. Emergency contact phone numbers.

6. Laboratory analyses and sampling plan required for transportation and disposal of all wastes in accordance with applicable federal, state, and local requirements.

E. Upon Completion of Remediation Activities, the following shall be provided:

1. Copy of manifests for all wastes leaving the site.

2. Copy of the laboratory analyses results from all sampling activities.

3. Copy of closure reports that may be required.

3.03 SURFACE WATER CONTROL

A. Remove surface runoff controls when no longer needed.

B. Seal off or berm catch basins in the area of construction to prevent discharge of untreated dewatering effluent or runoff from unstabilized construction areas into storm drains.

C. All drain inlets or catch basins used for dewatering discharge shall be provided with silt and sediment removal barriers as approved by the Engineer.

1. All barriers shall be cleaned regularly to avoid sediment discharge into the storm drain system.

2. Construction activities will be stopped at no cost to the City until sediment controls are properly maintained, installed, and in compliance with the dewatering permit.

3. All barriers shall be removed upon issuance of a hurricane warning.

3.04 DEWATERING SYSTEMS

A. Design, furnish, and install, operate, and maintain a dewatering system of sufficient size and capacity to permit excavation and subsequent construction activities in water-free conditions, and to lower and maintain the excavation area groundwater level a minimum of 2 feet below the lowest point of excavation. The dewatering system shall be designed and operated such that the system continuously maintains excavations water levels so as to maintain the excavation water level in order to allow for the initiation and completion of excavation backfill compaction and restoration activities.

B. Dewatering systems shall include, but is not limited to, furnishing and installing wells or well points, and or other equipment and appurtenances as may be necessary, including system components or equipment, installed outside the outermost perimeter of the excavation limits, and sufficiently below lowest point of excavation, to maintain the specified or required groundwater elevation.

C. Open trench pumping maybe permitted upon the approval of the Engineer.

D. Design and Operate Dewatering Systems:

1. To prevent loss of ground as water is removed.

2. To avoid inducing settlement or damage to existing facilities, completed Work, or adjacent property.

3. Avoid surface water pollution or discharge of sediment to storm drain systems or waterways.

E. Provide supplemental ditches and sumps only as necessary to collect water from local seeps. Do not use ditches and sumps as primary means of dewatering. The Contractor shall not direct any flow of water over pavement surfaces. Discharge of water shall be conducted as approved by the local, state, and federal agencies and the Engineer.

F. Provide controls to prevent surface water from entering excavation pits, trenches, or stockpiled materials.

3.05 PIPELINES CONSTRUCTED UNDER WATER

A. In the event that it is found that the water in a trench cannot be lowered by ordinary means, i.e., well points and pumps, an alternate construction method may be proposed by the Contractor. Complete details, specifications, manufacturer's descriptive literature, installation lists and any other pertinent data regarding the proposed alternate method shall be submitted as an alternate by the Contractor to the City within 5 calendar days of the time that the Contractor anticipates using such alternate method.

B. If the City approves the alternate method in writing, it may be used, so long as the Work is performed in a manner which, in the opinion of the Engineer, conforms to the method and procedure as set forth in the information supplied by the Contractor in his original application for use of an alternate method. The City may revoke

approval of the alternate method if at any time, in his opinion, the Work is not conforming to any applicable portion of these Specifications.

C. No pipeline shall be laid under water without approval of the City.

D. If the dewatering system is eliminated or the effort reduced, and the pipe is laid underwater, additional pipe zone material will be required as backfill to the water table elevation, or to the level it was reduced to.

3.06 DISPOSAL OF WATER

A. All water generated, pumped, or removed from excavations as a result of excavation dewatering activities shall be collected, containerized, and managed prior to discharge and or treatment at an approved discharge point or facility, in accordance with Broward County Code of Regulation, Sections 27. Contractor shall secure, obtain, and pay for all necessary local, state, and federal permits, licenses, fees, and or approvals to discharge water or perform onsite or offsite treatment and disposal. Treat water collected by dewatering operations as required by regulatory agencies, prior to discharge.

B. Discharge water as permitted, and in regulatory compliance with Contractor obtained discharge permits/licenses.

1. All discharge activities shall be performed so as to prevent silt and sediment discharge and eliminate any soil erosion or flooding, or otherwise damage existing facilities, completed Work, or adjacent property.

2. Maximum allowable turbidity of discharges to surface waters or storm drains will be 10 NTU's or the maximum permitted by the agency having jurisdiction, whichever is less.

3. Sump discharges cannot be discharged directly to storm drains or surface waters without treatment.

C. Affected storm sewer outfalls shall be protected with floating silt booms as approved by the Broward County Department of Environmental Protection and Growth Management Division (BCEPGMD) and the Engineer. All accumulated debris resulting from the dewatering discharge collecting in the boom shall be removed on a daily basis.

D. Visible silt plumes emanating from the area around the outfalls will be considered a failure of the silt and sediment removal measures and may result in a Notice of Violation issued by BCEPGMD. The Contractor will be responsible for all fines associated with the violation of the dewatering permit conditions issued to the Contractor.

E. Failure to control dewatering discharges as described above and as detailed in the Florida Erosion and Sediment Control Inspector's Manual, may result in an order to cease dewatering operations until the discharge problems are corrected. No claims will be accepted for costs or delays associated with unacceptable dewatering discharge practices.

3.07 WELL POINT REMOVAL

A. Well point holes shall be filled with sand which shall be washed into the hole.

B. Well point holes located within asphalt pavement surfaces or concrete pavements, shall be filled with sand to the subgrade. The remaining hole shall be filled with nonshrink grout.

3.08 CONTAMINATED GROUNDWATER AND DISPOSAL REQUIREMENTS

A. If Contractor suspects, witnesses, or identifies, groundwater contamination at any time during the performance of the Work, Contractor shall notify the City immediately. Results will be obtained by the onsite mobile laboratory.

B. If analytical testing documents and indicates elevated concentrations above FDEP action levels (Chapter 62-777, Florida Administrative Code) dewatering operations will be suspended until appropriate treatment and or construction measures can be implemented. Contractor shall not resume operations until notified to do so in writing by the City and construction of the remaining pipelines in that area will be installed in the wet or normal construction activities shall be resumed in another areas determined by the Engineer. There shall be no delay or mobilization claim associated with moving to another project area, unless all other Work has been completed. In addition, the local agency will be immediately notified via telephone and in writing by the Contractor. Dewatering activities in the area will not proceed until review of the matter with the local agency is resolved and written authorization is issued.

C. The Contractor shall submit a dewatering plan to the City for review. The Contractor is advised that the SFWMD, BCEPGMD, etc. May require that a dewatering plan, prepared by a state of Florida licensed Professional Engineer or registered professional geologist, be submitted and approved prior to issuance of a dewatering permit. The Contractor will retain a state of Florida licensed Professional Engineer or registered Professional Geologist to provide an initial report of potential dewatering issues in the site vicinity. The Contractor shall retain a state of Florida licensed Professional Engineer or registered geologist to provide any additional services required by regulatory agencies regarding dewatering and contaminated sites.

D. The Contractor is advised that the BCEPGMD may have identified contaminated sites within ¼ mile radius of the project site. The Contractor may be required to provide testing and monitoring of the dewatering operations, and to institute dewatering methods and controls, as required by BCEPGMD, SFWMD, etc. The contractor will be responsible for all costs associated with means and methods of dewatering which will be set forth by dewatering permits.

E. Treatment of the groundwater will include three options depending on the magnitude of the contamination in the trench or as determined by the Engineer: Granular Activated Carbon (GAC) Treatment Vessels, Mobile Air Stripping Units, or Vacuum Truck Removal and Disposal or other method as approved by the Engineer. The Contractor will provide a submittal list of all qualified groundwater remediation subcontractors for GAC vessel treatment/portable air stripping unit and

vacuum truck disposal including phone numbers, contact names, and addresses prior to start of construction. The selected groundwater treatment/recycling facility for hauling contaminated groundwater shall also be identified.

F. If contaminated groundwater in the dewatering trench is encountered, the remediation operations will begin once local agency approval is obtained. Contaminated water will be disposed first into a high volume holding (FRAC) tank and then treated through a GAC unit/portable air stripper or recovered into vacuum hauling trucks for disposal.

G. Effluent water from the treatment system will be analyzed by the onsite mobile laboratory to confirm that concentrations are below regulatory limits. Effluent water will then be directed to a pre-approved alternative location as determined by local agency and/or the Engineer.

- END OF SECTION -

SECTION 02281

TERMITE CONTROL

PART 1 -- GENERAL

1.01 THE REQUIREMENT

A. The CONTRACTOR shall provide soil treatment below slabs-on-grade for subterranean insects.

B. The CONTRACTOR shall provide soil treatment at interior and exterior foundation perimeter, for subterranean insects.

1.02 REFERENCE SPECIFICATIONS, CODES AND STANDARDS

A. EPA - Federal Insecticide, Fungicide and Rodenticide Act.

1.03 SUBMITTALS

A. Applicator: A Company specializing in soil treatment for termite control with three years documented experience and with a Professional Entomologist as part of the Organization. Submit qualifications of proposed company for acceptance by the ENGINEER.

B. Materials: Provide certification that toxicants conform to requirements of authority having jurisdiction. Toxicants shall be in water emulsion in strength as approved by Federal, State and Local Regulatory Agencies.

C. Material Packaging: Manufacturer's labels and seals identifying content.

D. Submittal shall meet requirements of the Section entitled "Submittals."

1.04 REGULATORY CONTROL

A. Conform to State of Florida and EPA requirements for application licensing and authority to use toxicant chemicals.

1.05 WARRANTY

A. Provide one year bonded guaranty for material and installation.

B. Bonded Guarantee: Cover against invasion or propagation of subterranean termites, damage to building or building contents caused by termites; repairs to building or building contents so caused.

C. Inspect Work annually and report in writing to OWNER.

D. The OWNER reserves right to renew bonded guaranty for an additional five years.

PART 2 -- PRODUCTS

2.01 DELIVERY

A. Chemicals shall be delivered to the project site in a transport equipped with a working gauge capable of indicating the correct number of gallons being applied to required areas.

B. The CONTRACTOR shall give the ENGINEER 48 hours written notice before any application begins. Application shall not start without ENGINEER on job site to record gauge readings at start and completion of application.

PART 3 -- EXECUTION

3.01 INSPECTION

A. Verify the soil surfaces are sufficiently dry to absorb toxicant and ready to receive treatment.

B. Beginning of application means acceptance of soil conditions.

3.02 APPLICATION

A. Application shall be observed by the ENGINEER.

B. Apply toxicant 12 hours prior to installation of vapor barrier under slab-on-grade or finish grading outside foundation walls.

C. Apply toxicant in accordance with manufacturer's instruction.

D. Coordinate soil treatment at foundation perimeter with finish grading and landscaping Work to avoid disturbance of treated soil. Retreat disturbed treated soil.

3.03 RETREATMENT

A. If inspection identifies the presence of termites, retreat soil and retest.

B. Use same toxicant as for original treatment.

- END OF SECTION -

SECTION 02363

AUGER CAST PILES

PART 1 – GENERAL

1.01 THE REQUIREMENT

A. The Contractor shall furnish all labor, materials, tools and equipment necessary for furnishing, installing, cutting off, load testing in compression and tension augered cast piles and other appurtenances as shown on the Drawings and specified herein. Also included are the following:

1. Test piles for compression and tension testing as located on the Contract Drawings.

2. The extent of auger cast piles shall be as indicated on the Drawings, and as specified herein.

B. Lengths of piles to be installed shall be reviewed by the Engineer as a result of the pile load tests. A pile load test is required prior to installation of production piles.

C. Prior to installing production piles, the Contractor shall obtain the pile load test reports, signed and sealed by a geotechnical engineer registered in the State of Florida and submit the reports to the Building Department for approval. Production piling shall not begin until approvals are received from the Building Department.

1.02 RELATED WORK SPECIFIED ELSEWHERE

A. Division 2 – Sitework

B. Section 03200 – Concrete Reinforcement

C. Section 03300 – Cast-In-Place Concrete

1.03 REFERENCE SPECIFICATIONS, CODES, AND STANDARDS

A. Comply with applicable provisions and recommendations of the following, except as otherwise shown or specified.

1. Florida Building Code

2. Augered Cast-In-Place Pile Manual, Deep Foundations Institute, latest edition

3. ASTM C109 Standard Method for Comprehensive Strength of Hydraulic Cement Mortars (using 2-inch cube specimens).

4. ASTM C937, Grout Fluidizer for Preplaced Aggregate Concrete

5. ASTM C939, Test Method for Flow of Grout of Preplaced Aggregate Concrete.

6. ASTM D1143, Standard Method of Testing Piles Under Axial Compressive Load.

7. ASTM D1586 Standard Method for Penetration Test and Split Barrel Sampling of Soils.

8. ASTM D3966, Standard Test Method for Individual Piles Under Static Lateral Load.

1.04 QUALITY ASSURANCE

A. An independent testing laboratory will be retained as specified in Section 01400 entitled "Quality Control" to inspect and test materials for the pile work. The Contractor shall schedule the work so as to permit a reasonable time for the testing laboratory to be on-site to take samples as well as inspect piling production and pile testing.

B. A geotechnical firm will be retained as specified in Section 01400 entitled "Quality Control" to monitor pile installation and load testing as follows:

1. Review the Contractor's submittals related to pile installation and load testing program.

2. Inspection: Geotechnical firm shall monitor and record pile installation and pile load test.

3. Record pile movements during load tests. The Contractor's surveyor shall measure the movement using surveying methods. The Contractor shall provide and install all dial gauges and calibrated jacks.

4. Verify that specified procedures are used on production piles.

5. Keep record of each pile placed. The record will give the pay length, type, calculated safe load and results of any tests. The Contractor shall cooperate with the geotechnical firm's representative to facilitate maintaining these records.

6. Testing: Geotechnical firm shall monitor the laboratory obtaining grout cubes during installation of piling Work.

C. Load Test: Piles indicated for testing on Drawings and required herein shall be tested per the requirements of Specification 02468 entitled "Pile Load Tests".

D. Pile Design Load: The required safe working capacity and ultimate load capacity for piles shall be as indicated on the drawings.

E. Installation tolerances: Deviation shall not be more than ¼-inch per foot from the vertical or batter line, with a total deviation of the head of pile not more than 3 inches. Finished elevation to be no more than 1 ½-inches above or below the elevations indicated.

F. Volume of pile: The volume of grout per linear foot of pile shall be equal to or exceed the calculated volume of grout per linear foot of the applicable test pile. Piles exhibiting an insufficiency of grout will be rejected or load tested as directed by the Engineer.

G. Lengths of piles to be installed shall be reviewed by the Engineer as a result of test pile loading. Pile paying lengths shall be considered as the length which is to remain in the final structure and shall be measured from the underside of structure slab (or tremie seal if a tremie seal is used) to the tip elevation embedded.

1.05 SUBMITTALS

A. Submit Working Drawings as specified in Section 01300. The data submitted shall include the following:

1. Full data on type of pile installation equipment to be utilized.

2. A description and sketch or catalog data of the pile installation rig including but not limited to: leads, auger, grout pump and auger motor.

3. The proposed pile installation sequence referenced to the Drawings and pile identification plan.

4. The proposed pile installation procedures.

5. Qualifications of personnel supervising the performance of pile installation.

6. Qualifications of subcontractor who will be installing the piles. Qualifications shall indicate that subcontractor has been engaged in successful installation of auger cast piles for at least five years and that his crane operators or “keymen” who give directions to the crane operation have at least two years of experience in the successful installation of auger cast piles.

7. Complete data on pile load test equipment instrumentation, load equipment calibration, load application and protection if any.

8. The proportioning of grout and installation of augered grout injected piles shall be performed in accordance with the provisions of these Specifications. Provide a description of the materials to be used and the proposed method of operations, and furnish records and data to demonstrate that the finished piles will meet, in all respects, the quality and properties required by these Specifications.

B. Ten (10) days prior to the start of Work, grout mix design from the supplier and flow cone and strength test results on samples of grout demonstrating conformance to contract requirements shall be submitted to the Engineer.

C. Installation Records:

1. Submit two copies of the installation record of each pile to the Engineer not later than two (2) days after installation is completed. Include the project name, date, weather conditions, pile number, names of contractors, pile location and pile capacity, rate of operation of pile installation equipment and pressure on grout pump at tip elevation, volume of grout injection, rate of auger penetration, rate of auger extraction, pile dimensions, tip elevation, elevation of butt, ground elevation, pile deviation, and any unusual occurrences during pile installation.

2. Submit Record Drawings showing exact location of each pile as installed.

D. During progress of the Work, keep an up to date set of Drawings showing field modifications. Immediately upon completion of work, provide Record Drawings showing the actual in-place installation of all Work constructed and/or installed under this Section. Drawings shall include all necessary plans, sections and details, with all reference dimensions and elevations required for complete Record Drawings of the Work.

E. Test Reports: Submit 2 copies of each test report for each test within 2 days after completion of tests.

1.06 JOB CONDITIONS

A. Product Delivery, Storage and Handling:

1. Contractor shall deliver, store, handle and protect all products, materials and equipment in accordance with Section 01600.

2. Supplier of grout shall be located in close proximity to the project and not more than 30 minutes driving time away.

3. Deliver materials to the site in such quantities and at such times as to assure the continuity of pile installation operations for each pile.

B. Site Information:

1. Test borings and other exploratory operations may be made by the Contractor at no additional cost to the Owner, provided such operations are acceptable to the Owner, in accordance with contract documents.

C. Line and Level:

1. A benchmark and a base line shall be established on the site by Contractor for establishing lines and levels for the work. The Contractor shall establish and locate all lines and levels and be responsible for the correct location and deviation measurements of all piles.

2. The Contractor shall cooperate with the Engineer and provide them safe access to the inspection locations in order to perform their work. Where necessary, the Contractor shall cease work while the inspections are being performed.

D. Protection:

1. Protect structures, underground utilities and other construction from damage caused by pile installation operations.

2. When structures are adjacent to pile installation operations, provide surveyed elevation benchmarks on structures where directed by the Owner before commencing Work. Record and report the elevation of each benchmark at least once a day while pile installation is in progress. Should benchmark readings indicate any displacement, halt operations and provide corrective action acceptable to the Engineer.

PART 2 – PRODUCTS

2.01 MATERIALS

A. Concrete shall conform to the requirements of Section 03300, except coarse aggregate is not allowed and except as specified herein.

1. Portland cement shall conform to current ASTM C150.

2. Fly ash, if used, shall conform to ASTM C618, Class F.

3. If the Contractor elects to use a grout fluidizer, submit manufacturer's data on the use of this product to the Owner for review and approval. Fluidizer shall conform to ASTM C937.

4. Other admixtures shall not be used.

5. Water shall be fresh, clean, and free of sewage, oil, acid, alkali, salts, or inorganic matter.

6. Fine aggregate shall meet the requirements of current ASTM C33 standards, except that grading may be modified, if compressive strength requirements are satisfied.

B. Reinforcing Bars shall have a minimum yield of 60,000 psi and shall conform to the requirements of Section 03200.

C. Grout Mix for Auger Drilled and Grouted Piles:

1. The grout used to fill the holes shall consist of a mixture of Portland cement, fluidizer, sand and water so proportioned and mixed as to provide a grout capable of maintaining the solids in suspension without appreciable water gain yet which may be placed without difficulty, and which will laterally penetrate and fill any voids in the foundation material. The materials shall be so proportioned as to provide a hardened grout having an ultimate compressive strength of 4,000 psi at 28 days when tested in accordance with provisions of ASTM C109.

2. The grout mix shall be tested by the Testing Laboratory at the Owner's expense by making one set of 2-inch cubes in accordance with ASTM C109 and C492 for each day during which piles are placed. A set of cubes shall consist of a total of six (6) cubes, 3 cubes to be tested at 7 days and 3 cubes to be tested at 28 days. All samples to be taken at the midpoint of installation of a pile.

3. Only approved pumping, continuous mixing and agitating equipment shall be used in the preparation and handling of the grout. All oil and other rust inhibitors shall be removed from mixing drums and grout pumps. All materials shall be such as to produce homogeneous grout of the desired consistency.

4. The grout pump shall be a positive displacement piston type pump capable of developing displacing pressures at the pump up to 350 psi. The minimum volume of grout pumped for each hole shall be at least equal to 125 percent of the volume of the augered hole. Where actual versus theoretical volume is less than 1.25, the pile shall be redrilled.

2.02 EQUIPMENT FOR INSTALLING PILES

A. Equipment for Installing Auger Drilled and Grouted Piles:

1. The hole through which the grout is pumped during the placement of the pile shall be located at the bottom of the auger head below the bar containing the cutting teeth.

2. The auger flighting shall be continuous from the auger head to the top of auger with no gaps or other breaks. The pitch of the auger flighting shall be one-half the auger diameter.

3. Augers over 40 feet in length shall contain a middle guide.

4. The piling leads should be prevented from rotating by a stabilizing arm.

PART 3 – EXECUTION

3.01 PREINSTALLATION WORK

A. Installer must examine the areas and conditions wherever piles are to be installed.

B. Do not install piles until earthwork in area which piles are to occupy has been completed, as follows:

1. Excavations: Earth excavations will be complete to the bottom of pile cap before piles are installed.

2. Fills: Fills will be constructed and compacted to the bottom of pile cap prior to pile installation.

3. Excavation Support: any foundation or excavation support required in area shall be completely installed before piles are installed.

3.02 GENERAL REQUIREMENTS

A. Piles shall be installed with due consideration for the safety of adjacent structures and existing active utilities by a method which leaves their strength unimpaired and which develops and retains the required load bearing capacity.

B. Augered cast piles shall be made by rotating a continuous flight hollow shaft auger into the ground to the minimum tip Elevation indicated on the Drawings. Grout shall then be injected through the auger shaft as the auger is being withdrawn at a rate consistent with the grout injection in such a way as to exert pressure to push soil from the auger flights to the surface on the earth filled auger as it is being withdrawn as well as lateral pressure on the soil surrounding the grout filled pile hole. Auger withdrawal rate shall not exceed 10 feet per minute.

C. Each pile shall contain reinforcing as shown on the Drawings conforming to Section 03200. Bars shall be installed upon completion of the grout injection with the use of three centralizers, located at even spacing along the length of the reinforcing cage, to assure maximum grout cover. The vertical bars shall extend to the top layer of horizontal steel in the slab. The type of centralizers to be used shall be submitted for approval. Bars shall be continuous the without lap splices unless approved by Engineer.

D. At the time of installation, a 16-gauge metal shell formed in cylinder shape matching the pile diameter and shall extend a minimum of 18 inches below pile cut off or 12 inch below competent subgrade, whichever is greater in length.

1. The Contractor will not be allowed to remove fresh grout from the top of piles to achieve cut-off elevation.

E. The Contractor shall submit a schedule for pile installation. Piles shall not be installed until the schedule is approved by the Engineer. Piles closest to existing structures shall be installed first followed by piles progressively further away.

F. A Pre-installation meeting shall be held 10 days prior to installation of test piles. Attendees shall be a representative from the Pile Installer, Contractor, and Engineer.

3.03 PILE INSTALLATION

A. General:

1. The installation shall be performed in an orderly sequence progressing in one direction across each foundation element.

2. Continuously install each pile at the locations indicated, to the elevation determined for each pile by the Engineer. If the elevation is estimated on the drawings piles shall be advanced to refusal.

3. Carefully maintain the center of gravity for each group or cluster of piles to conform to the locations shown.

4. Carefully plumb the leads and the auger before installation.

5. The weight of the augers and auger head shall be at least 7.0 kips to increase the rate of auger penetration. Auger rotation shall stop immediately following reaching the maximum depth and shall not start again until grouting has begun, unless grouting begins immediately after reaching required depth.

6. In the event that non augerable material is encountered such as cobbles, boulders, rock ledge, metal, timbers or debris which causes the rate of penetration to be reduced to less than one foot per minute or causes the pile to drift from its location, the pile shall be completed to the depth of the non augerable material in accordance with these Specifications. The length of such short piles shall be included in the total linear feet of pile for payment. If required by the Owner, one or more additional adjacent piles shall be placed and the length of these additional piles shall also be included in the total linear feet of piles for payment. Piles mistakenly placed by Contractor will not be paid for.

B. Installation:

1. Grout shall be placed as soon as practicable after mixing, and in no case shall grout be used which does not reach its final position in the pile within 1 1/2 hours after truck mixed grout leaves the plant, as evidenced by the delivery ticket given to the inspector. Grout temperature at placement shall not exceed 95 degrees. Water shall not be added after the grout is mixed, unless a procedure for adding water is approved by the Engineer.

2. Only approved mixing and pumping equipment shall be used in the preparation and handling of grout. A screen to remove oversize particles shall be placed at the pump

inlet. All oil or other rust inhibitors shall be removed from the mixing drums, stirring mechanisms, and other portions of the equipment in contact with the grout before the mixers are used.

3. Accurate records shall be maintained showing the depth to which piles are drilled and the quantity of grout placed. Any unusual conditions encountered during pile installation shall be noted. The leads of the rig shall be clearly marked in one foot increments along its entire length.

4. Piles installed the same day shall not be closer than six pile diameters center to center of each other.

5. The hole in the bottom of the auger shall be plugged while being advanced into the ground. The plug shall be fabricated to fit snugly into the augered hole. The plug shall be removed by grout pressure.

6. The grout shall be pumped with initial pressure of approximately 250 psi at the pump as the auger is withdrawn allowing the grout to fill the hole, preventing its collapse, and permitting lateral intrusion of the grout into the surrounding soil. A second pressure gauge shall be provided located as close to the auger rig as possible such that it is just touching the ground when the auger is in the raised position. The range of this gauge shall not exceed twice the normal pumping pressure.

7. The grout pump shall be provided with a calibrated pressure gauge in clear view of the equipment operator. A digital counter shall be used to measure the number of grout pump strokes during installation. The grout pump shall be calibrated at the beginning of the project to determine the number of pump strokes to fill a 55-gallon drum with grout. The pump shall be recalibrated following repair or switching pumps or at least once at the request of the Owner during pile installation. The Contractor shall have on hand a spare counter and a spare pump. The spare pump shall be utilized when the primary pump is not functioning properly and when directed by the Owner.

8. Positive rotation of the auger shall be maintained throughout placement of the grout. Rate of grout injection and rate of auger withdrawal from the soil shall be so coordinated as to maintain at all times a positive pressure on these gauges, which will, in turn, indicate the existence of a removing pressure on the bottom of the auger flight in conformance with Section 3.02 B of these Specifications. The total volume of grout installed shall be at least 15 percent greater than the theoretical volume of the void created by the auger, for each five-foot segment of pile, except after grout is flowing at the ground surface from the auger blade. However, the total volume of grout pumped shall be at least 25 percent greater than the theoretical volume of the pile. Do not withdraw auger until soil cuttings or water are no longer observed issuing and a clean flow of grout is evident at the surface. If pumping of grout is interrupted for any reason or if grout return at the surface is noted, the Contractor shall re-insert the auger at least five (5) feet into the pile and re grout.

9. If less grout is placed than the net volume required for any five-foot increment, the piles shall be reinstalled by rotating the auger to the bottom of the pile followed by controlled removal and grout injection.

10. A head of at least five (5) feet of grout above the injection point shall be maintained around the perimeter of the auger flights during raising of the auger so that the grout has a displacing action, removing any loose material from the hole. This head shall be initially established by raising the auger six (6) inches from the bottom while rotating, pumping grout until a sufficient quantity is measured, lowering the auger to its original level, and finally starting the removal process.

11. Auger hoisting equipment shall be so designed as to enable the auger to be withdrawn smoothly and steadily. Augers in excess of 40 feet in length shall be provided with a traveling guide.

12. Magnitude of removing pressure and performance of other augering and grouting operations such as the rate of augering, rate of grout injection, and control of grout return around the auger flight are dependent on soil conditions and equipment capability and shall be entirely the responsibility of the Contractor.

13. The spoil that accumulates around the auger during injection of the grout shall be continuously cleared away so that the installation can be properly inspected.

14. Provide protective cover for each pile after installation as indicated in Paragraph 3.02.D.

15. Contractor shall test each truckload of grout using the Flow Cone Test ASTM C939, with a flow cone fitted with a 3/4 inch diameter outlet. Maintain grout fluidity of between 15 and 25 seconds.

16. Should water or ponding collect at the top of a freshly grouted pile, the water shall be removed immediately by bailing out and replaced with fresh grout.

C. Installation Tolerances: Install piles within the following maximum tolerances.

1. Location: 3 inches from the location indicated for the center of gravity of each single pile or pile groups.

2. Plumbness:Maintain 2 inches in 10 feet from the vertical.

3. Elevation: +/-1/2 inch from top of pile elevation.

D. Corrective Action:

1. As soon as possible, after completion of installation of piles, Contractor shall prepare an accurate survey made by a surveyor licensed in the State of North Carolina and furnish it to the Engineer with a record showing the final position of the top of each pile and locations of unacceptable piles.

2. The Engineer will check the piling and determine its acceptability. If not acceptable, the Engineer will advise the Contractor what additional piles must be furnished or other corrective measures to be taken.

3. The Engineer will provide redesign required due to piles installed out of location. All corrective measures, including cost to the Engineer for the redesign, shall be at the Contractor's expense.

4. Partial surveys of piles at cutoff elevation may be submitted, as driving proceeds, in order to expedite the Work.

E. Jetting: Jetting shall not be employed.

F. Damaged Piles or Piles Out of Tolerance:

1. Damaged piles, and piles installed outside the required installation tolerances, will not be accepted.

2. Cut off and abandon piles rejected after installation, and replace with new piles.

3. Install additional piles where the centerline deviation exceeds 3 inches and a redesign indicates a load on any pile exceeding 110 percent of the design load. Where these additional piles necessitate changes in pile cap dimensions or reinforcement, Contractor shall carry out all corrective measures required to obtain the approval of the Engineer without additional cost to the Engineer. Should it be impractical to install additional piles in particular situations, provide reinforced concrete straps or other measures as directed by the Engineer for redistributing the design loading, without additional cost to the Engineer.

G. Cutting Off: Cut off the tops of piles, square with pile axis and at the elevations indicated by cutting off hardened grout down to final cut off point at any time after initial set has occurred. Removing fresh grout from the top of the pile will not be permitted.

H. Cold Weather Placing: Protect grout work from physical damage or reduced strength which could be caused by frost, freezing actions, or low temperatures, in accordance with ACI 306.

I. Hot Weather Placing: When hot weather conditions exist that would seriously impair the quality and strength of grout, place grout in accordance with ACI 305.

3.04 FIELD QUALITY CONTROL

A. Install and load test piles in order to confirm or modify design pile lengths. Pile load tests shall be performed in accordance with ASTM D1143 using the quick load procedure and as modified herein. Provide complete testing materials and equipment as required, and perform tests only in the presence of the Engineer. Test piles shall be installed and loaded from the excavation subgrade level.

B. Reaction piles, furnished and installed by Contractor to determine lengths of piles, may be located, cut-off, and become part of the foundation system provided they conform to the Specification requirements.

C. Test Piles Required: Provide test piles as previously indicated. A telltale shall be installed in the compression piles. The test pile shall be installed with tip elevation required to ensure that the pile is embedded to required depth. The Engineer may adjust this elevation based on the boring results.

D. Installing Test Piles:

1. Submittals Required: The general location of the test piles shall be as indicated on the Drawings. The Contractor shall submit a sketch showing the details of the pile test set up as required in ASTM D1143 and the specific location of the test piles and anchor pile.

2. Prepile Installation: The Contractor shall retain a qualified Geotechnical Contractor to perform split spoon sample borings at the test location and obtain samples at 2.5 feet intervals. The borings shall be drilled to a tip Elevation indicated on the Drawings or as directed by the Engineer, for the test pile at the test location. A hollow-stem auger will not be permitted to advance these holes.

3. At each pile test area, install test pile and anchor piles as shown on the approved pile test set up. Tip elevations shall be as indicated on the Drawings. All test piles shall be installed from an excavation level as shown on the Drawings.

E. Pile Design Load: The required safe working capacity and ultimate capacity for the piles shall be as indicated on the drawings.

F. Test Loads: Load single test piles to the ultimate load capacity as defined in 3.04E, followed by unloading and reloading to two times the safe working capacity.

G. Pile Load Testing – Compression Load: Perform load tests at the test locations in accordance with ASTM D1143 using the quick load procedure.

H. Uplift tensile Test: Shall be performed on additional piles located on the Contract Drawings Tests shall be in conformance with ASTM D3689.

I. General Load Test Requirements:

1. The test load shall be applied by jacking with a hydraulic jack against a dead weight loaded platform or against a reaction beam attached to four or more anchor piles. The center to center spacing between test pile and closest anchor pile shall not be less than 9 feet. The hydraulic jack shall be equipped with an accumulator and the necessary gauges and piping which shall transmit constant load to the pile with deviations of less than 500 pounds from the applied load. A calibration curve for the jack and gauge to be used shall be submitted to the Owner within 7 days of the commencement of the load test and shall be certified by a recognized testing laboratory. Each load test shall include the use of a recently calibrated load cell and a ball joint to assure concentric loading of the pile top. A description of the operation of the accumulator and a working drawing of the proposed loading platform and dead weights or reaction beam and anchor piles to be used shall be supplied to the Owner for approval, prior to the set up of Load Test Work. Beam sizes and details of all connections shall be included. A telltale consisting of a 1/2-inch diameter pipe shall be placed inside the 1-1/4-inch casing installed in one of the compression piles with the tip installed to tip elevation of the pile to permit a measurement of deflection of the pile tip during load tests. The telltale shall be inserted in the casing prior to removal of the auger. A load frame shall be placed above the piles to facilitate measurement of pipe tip deflections. An example of load frame is shown on Figure 7 of ASTM D1143. A dial gauge shall be provided to measure pile tip movement as indicated by the telltale rod.

2. Following completion of the load test program, at the direction of the Owner, the Contractor may be required to excavate around the contract pile at each test site where the piles penetrated organic soil to 2 ft. below the bottom of organic or a minimum of 6-ft. below grade to permit measurement of the pile cross Section.

- - END OF SECTION - -

SECTION 02369

STEEL SHEET PILING

PART 1 -- GENERAL

1.01 WORK INCLUDED

A. Furnish and install steel sheet piling, complete with wales and other incidentals required for a complete system as shown on the Drawings or when required to maintain the integrity of existing structures or excavations. Sheet piling when shown is mandatory for this project. The Contractor assumes responsibility for the sheeting designs not shown on the drawings.

B. Contractor shall consider the possibility of encountering hard rock materials during sheet piling installation. No additional payment will be made for installation of sheet piling through hard rock materials.

1.02 QUALITY ASSURANCE

A. Unless otherwise indicated, all workmanship and practices shall be in accordance with ASTM A328. Welding shall conform to AWS DI.1 Structural Welding Code. Steel for sheet piling shall conform to ASTM A328. Protective tape for tie rods (if required) shall conform to F.S. L-T-1512A and Military Spec. MIL, 1-631D and AM5.

1.03 DESIGN

A. Pipe trenches and excavations shall be constructed of interlocked steel sheeting as shown on the drawings. Sheeting, whether permanent or temporary, shall be designed and installed by the Contractor. Wales and cross struts required for pipe trenches shall also be designed and installed by the Contractor.

1.04 SUBMITTALS

A. Design Calculations: Design calculations signed and sealed by a Professional Engineer registered in the State of Florida shall be submitted for all sheeting, wales and struts that are designed by the Contractor. The submittal of design calculations is only required to demonstrate that proper engineering judgment has been used to design the sheeting. The Engineer will only acknowledge the receipt of the submittals. No approvals of the submittals will be made.

B. Shop Drawings: Submit shop drawings showing the sheeting layout, connection details, and elevations, including product data and details for driving guide and falsework, sequence of construction, driving equipment including pile hammer, power plant, leads, and cushion material and helmet. Shop drawings shall indicate all connection details and dimensions of the wales and struts to be installed under this Contract. The review of these drawings shall in no way relieve the Contractor of the responsibility to provide a safe and satisfactory sheeting and shoring system.

1.05 DESIGN CRITERIA

A. The Contractor retains the design responsibility for the sheeting within the constraints specified herein.

B. The layout of the sheeting shall not be changed without the written permission of the Engineer.

C. The sheets shall be driven to retain water and earth to the bottom of the proposed trenches or excavations. The top elevation of the sheeting shall not be lowered by the Contractor.

D. Earth loads on the sheeting shall be estimated by the Contractor based on soil information presented.

E. Live loads shall be estimated by the Contractor based on equipment used.

F. The Owner and Engineer assumes no responsibility for the safety or serviceability of the sheeting, construction methods employed, or due to adverse weather conditions, hurricanes or other natural forces. No additional compensation will be made due to damage or collapse of the sheeting during construction.

PART 2 -- PRODUCTS

2.01 MATERIALS

A. Sheet Piling: Z-shaped interlocked panels, including special fabricated sections, having a normal web thickness of at least 3/8 inch and being of a design such that they shall be continuously interlocked throughout their entire length. Piling shall conform to ASTM A328 with a yield strength of 38,500 psi. Higher strength sheets may be used at the Contractor's option at no additional cost to the Owner. Provide pickup holes four inches below top of pile.

B. Wales and Struts: Shall be provided when deemed necessary by the Contractor and shall conform to ASTM A36. Wales and struts shall be used when required by design for pipe trenches.

PART 3 -- EXECUTION

3.01 PLACING PILES

A. Carefully locate piling as shown on the Contractor submittals. Place piles in a plumb position with each pile interlocked with adjoining piles for its entire length, so as to form a continuous diaphragm throughout the length of each run of wall. Place all piles as true to line as possible and provide suitable temporary wales or guide structures to insure that the piles are driven to correct alignment.

3.02 DRIVING PILES

A. Driving: Drive all piles to the elevation required and extend to the elevation indicated for the top of piles. A tolerance of one inch above the indicated top elevation will be permitted.

Drive piles by approved methods in such manner as not to subject the piles to serious damage and to insure proper methods throughout the length of the piles. Pile hammers shall be maintained in proper alignment during driving operations by use of suitable leads or by guides attached to the hammer. A protecting cap shall be employed in driving to prevent damage to the top of piles. Adequate precautions shall be taken to insure that piles are driven plumb. If at any time the forward or leading edge of the piling is found to be out of plumb in the plane of the wall, the piles already assembled and partly driven shall be removed to the first plumb pile, and the Contractor shall take corrective measures to insure the plumbness upon installation. Each run of piling shall be driven to grade progressively from the start and no pile shall be driven to a lower grade than those behind it in the same run except when the piles behind it cannot be driven deeper. If the pile next to the one being driven tends to follow below final grade it may be pinned to the next adjacent pile. Should obstructions render it impracticable to drive a pile to the specified penetration, the Contractor shall make such changes in design alignment of the pile structure as may be deemed necessary by the Owner's representative to insure the adequacy and stability of the structure. Piles driven out of interlock with adjacent piles or otherwise damaged shall be removed and replaced by new pile at the Contractor's expense. If the Contractor encounters difficulty driving the sheet piling to the specified tip elevation, it shall provide driving shoes for sheets and/or pre-auger and backfill with concrete in order to obtain the specified tip elevation. No additional payment will be made for driving shoes, auguring and backfill with concrete or spudding.

B. Pile Hammer: Select and use a vibratory type hammer which has sufficient weight and energy to suitably install the specified pile, without damage, into the soils as indicated on the Drawings.

C. Driving Shoes: The Contractor will be permitted to provide hardened cast steel shoes which fully support the pipe pile and sheet pile tips for driving. Driving shoes shall be installed according to manufacturer's recommendations.

3.03 MONITORING

A. Before starting work, the Contractor shall check and verify governing dimensions and elevations. In company with the Engineer, it shall jointly survey the condition of adjoining structures. It shall take photographs, as directed by the Engineer, recording any prior settlement of cracking of structures, pavements, and other improvements. It shall prepare a list of such damages, verified by dated photographs, and signed by the Contractor and the Engineer participating in the investigation.

B. The Contractor shall survey adjacent structures and improvements, establishing exact elevations at fixed points to act as bench marks. It shall clearly identify bench marks and record existing elevations. Datum level used to establish bench mark elevations shall be located at a sufficient distance so as not to be affected by movement resulting from excavation or construction operations.

C. During excavation, the Contractor shall resurvey bench marks weekly, employing a licensed Land Surveyor or registered Professional Engineer. It shall maintain an accurate log of surveyed elevations for comparison with original elevations. It shall promptly notify the Engineer if changes occur or if cracks, sags or other damage is evident.

- END OF SECTION -

SECTION 02371

GEOTEXTILES

PART 1 – GENERAL

1.01 DEFINITIONS

A. Fabric: Geotextile, a permeable geosynthetic comprised solely of textiles.

B. Minimum Average Roll Value (MinARV): Minimum of series of average roll values representative of geotextile furnished.

C. Maximum Average Roll Value (MaxARV): Maximum of series of average roll values representative of geotextile furnished.

D. Nondestructive Sample: Sample representative of finished Work, prepared for testing without destruction of Work.

E. Overlap: Distance measured perpendicular from overlapping edge of one sheet to underlying edge of adjacent sheet.

F. Seam Efficiency: Ratio of tensile strength across seam to strength of intact geotextile, when tested according to ASTM D4884.

1.02 DELIVERY, STORAGE, AND HANDLING

A. Deliver each roll with sufficient information attached to identify it for inventory and quality control.

B. Handle products in manner that maintains undamaged condition.

C. Do not store products directly on ground. Ship and store geotextile with suitable wrapping for protection against moisture and ultraviolet exposure. Store geotextile in way that protects it from elements. If stored outdoors, elevate and protect geotextile with waterproof cover.

PART 2 – PRODUCTS

2.01 SUBMITTALS

A. Submittals shall be in accordance with Section 01300 – Submittals.

2.02 NONWOVEN GEOTEXTILE

A. Pervious sheet of polypropylene, or polyethylene fabricated into stable network of fibers that retain their relative position with respect to each other. Nonwoven geotextile shall be composed of continuous or discontinuous (staple) fibers held together through needle-punching, spun-bonding, thermal-bonding, or resin-bonding.

B. Geotextile Edges: Selvaged or otherwise finished to prevent outer material from pulling away from geotextile.

C. Unseamed Sheet Width: Minimum 6 feet.

D. Physical Properties: Conform to requirements in Table No. 1.

TABLE NO 1
PHYSICAL PROPERTY REQUIREMENTS FOR NONWOVEN GEOTEXTILE

Property	Requirement	Test Method
Water Permittivity	14 $sec.^{-1}$, MinARV	ASTM D4491 (Falling Head)
Air Permeability	200 cf/min/sq ft, MinARV	ASTM D737
Transmissivity, Planar Waterflow/Siphonage	0.5 ft^2/sec., MinARV	ASTM D4716
Apparent Opening Size (AOS)	30 U.S. Standard Sieve Size	ASTM D4751
Grab Tensile Strength, Machine Direction	400 lb/in, MinARV	ASTM D4632
Grab Elongation, Machine Direction	50 percent, MaxARV	
Puncture Strength	400 lb, MinARV	ASTM D4833
Trapezoid Tear Strength	400 lb, MinARV	ASTM D4533
Abrasion Resistance	20 percent loss, 250 cycles, MaxARV	ASTM D4886
Ultraviolet Radiation Resistance	80 percent strength retention, MinARV after 500 hours	ASTM D4355

PART 3 – EXECUTION

3.01 LAYING GEOTEXTILE

A. Lay and maintain geotextile smooth and free of tension, folds, wrinkles, or creases.3.02

3.02 SHEET ORIENTATION FOR SUBSURFACE DRAINAGE

A. Orient geotextile in the trench with the long dimension parallel to the trench.

B. The filter material shall not be dropped on the geotextile from heights greater than 3 feet.

3.03 JOINTS

A. Unseamed Joints:

1. Overlapped.

2. Overlap, unless otherwise shown:

a. Foundation/Subgrade Stabilization: Minimum 18 inches.

b. Riprap: Minimum 18 inches.

c. Other Applications: Minimum 12 inches.

3.04 INSTALLING GEOTEXTILE IN TRENCHES

A. Place geotextile in a way that will completely envelope granular drain material to be placed in trench and with specified overlap at joints. Overlap geotextile in direction of flow. Place geotextile in a way and with sufficient slack for geotextile to contact trench bottom and sides fully when trench is backfilled.

B. After granular drain material is placed to required grade, fold geotextile over top of granular drain material, unless otherwise shown. Maintain overlap until overlying fill or backfill is placed.

3.05 REPAIRING GEOTEXTILE

A. Repair or replace torn, punctured, flawed, deteriorated, or otherwise damaged geotextile.

B. Repair Procedure:

1. Place patch of undamaged geotextile over damaged area and at least 18 inches in all directions beyond damaged area.

2. Remove interfering material as necessary to expose damaged geotextile for repair.

3. Sew patches or secure them with heat fusion tacking or with pins and washers, as specified above in Article SECURING GEOTEXTILE, or by other means approved by Engineer.

3.06 REPLACING CONTAMINATED GEOTEXTILE

A. Protect geotextile from contamination that would interfere, in Engineer's opinion, with its intended function. Remove and replace contaminated geotextile with clean geotextile.

- END OF SECTION -

SECTION 02468

PILE LOAD TESTS

PART 1 – GENERAL

1.01 REQUIREMENT

A. The Contractor shall provide all equipment, labor, materials and incidental items necessary to perform the pile load tests as indicated on the Contract Drawings or specified herein.

1.02 PAYMENT

A. The Contractor's base bid shall include all costs associated with performing the pile load tests at the locations indicated on the Contract Drawings and as specified herein.

B. Test piles, driven in locations where piles are required and have passed the load test requirements and have not been loaded to failure, may be incorporated in the structure.

1.03 REFERENCES

A. ASTM D1143-Test Method for Piles Under Static Axial Compressive Load.

B. ASTM D3689-Test Method for Individual Piles Under Static Axial Tensile Load.

C. ASTM D3966-Test Method for Piles Under Lateral Loads.

D. ASTM D4945-Test Method for High-Strain Dynamic Testing of Deep Foundations

E. Florida Building Code

1.04 PERFORMANCE REQUIREMENTS

A. Pile load tests shall conform with the Florida Building Code and these Specifications. Where the requirements of the Specifications are more rigorous, they shall be adhered to. For compressive load test the type of method utilized (static or dynamic) shall be as recommended by Geotechnical Engineer of record or the registered design professional overseeing the testing.

B. The working load of the piles shall be as shown on the Contract Drawings.

C. Tested piles which pass the load tests and are within tolerance at permanent locations shall be reset for use as permanent piles. The Contractor shall obtain the Engineer's approval for each pile so tested and so reset.

D. Piles which do not meet the requirements for the working load of the piles shall be rejected and additional testing shall be performed on other piles at no additional cost to the Owner.

1.05 SUBMITTALS

A. The Contractor shall submit Working Drawings, Shop Drawings and material specifications for the approval of the Engineer in accordance with Section 01300. Shop Drawings shall include, but not be limited to:

1. Full description of test method and equipment.

2. Load type and loading equipment.

3. Safety devices.

4. Calibration equipment.

B. The Contractor shall also submit a complete report to the Engineer at the completion of each pile load test. The Contractor shall engage the services of a Professional Engineer, subject to the approval of the Owner, currently registered in the State of Florida, experienced in pile load testing and load test analysis for the supervision of load test procedures and preparation of the report. The report shall include, but not be limited to:

1. Pile identification and location.

2. A description of the pile driving equipment.

3. Driving records for both test piles and reaction piles.

4. Complete test data.

5. Analysis of test data.

6. Recommended allowable design loads based on the pile test reports.

7. Description of subsurface conditions.

8. Recommended pile installation criteria.

1.06 SCHEDULE OF OPERATIONS

A. Load tests of piles shall be scheduled sufficiently in advance of production pile driving to prevent delay in the progress of the work.

B. No production piles shall be driven until the load test report is approved by the Engineer.

1.07 QUALIFICATIONS

A. The work shall be performed by a General Contractor or a specialty subcontractor specializing in the specified piling system and having experience in performing pile load tests and installing the specified system under similar subsurface conditions.

PART 2 – PRODUCTS

2.01 COMPRESSIVE PILE LOAD TESTS – STATIC TEST METHOD

A. General: Static compressive pile load tests shall be in accordance with ASTM D1143 and the Florida Building Code. The load tests at locations shown on the Contract Drawings shall be made on test piles placed to the tip elevation and/or driving resistance used for establishing lengths of piles, unless otherwise directed by the Engineer. Loading, testing and recording of data shall be under the direct supervision of the registered Professional Engineer engaged by the Contractor. A report shall be submitted in accordance with Article 1.05, Submittals.

B. Testing Apparatus: The proposed testing apparatus and structures to be used in making the pile load tests shall be designed by a Professional Engineer currently registered in the State of Florida engaged by the Contractor. The Contractor shall submit working Drawings to the Engineer for approval. Approval by the Engineer shall not relieve the Contractor of his complete responsibility for the adequacy of the pile load test setup.

1. Load tests shall be performed by a method that will maintain constant concentric load under increasing settlement.

2. Settlement observations shall be made by means of dial extensometers. A minimum of three (3) extensometers shall be used. The extensometers shall provide readings to the nearest 0.001 inch. In addition, settlement observations shall be taken using an engineer's level reading to 0.001 feet properly referenced to a well-established benchmark.

C. Load Tests

1. The Contractor shall install test piles of the same size and materials as the permanent piles. Test piles shall be installed with the same equipment and in the same manner as the permanent piles.

2. In cases where test piles will develop resistance during testing by non-bearing materials to be excavated, the test pile shall be cased off in that material(s). Permanent piles may be used as reaction piles.

D. The Contractor shall provide all equipment, instruments, personnel, accessories and appurtenances required for the tests. The Contractor shall place reaction piles and beams, as required, to transmit load into the test pile. Calibrated pressure gauges shall be used to determine the actual load placed on the test pile. Calibrations shall have been made within three (3) months of load testing.

1. The Contractor shall prepare complete detailed shop Drawings showing how the test will be performed, how the reaction piles will be placed, and how the jacking beams will be anchored to the test piles and the reaction piles.

2. The Contractor's shop Drawings shall include date and calibration curves on all instruments and accessories used in the tests.

3. The entire test setup and test procedure shall be subject to the approval of the Engineer.

4. A table of pile loads and test pressures for each test shall be submitted.

5. A foundation stability analysis where dead weights are used for test reactions shall be submitted.

E. Test loads shall be applied by direct weight or by means of a hydraulic jack. The loading platform or box shall be carefully constructed to provide a concentric load on the pile.

1. If direct weight is employed, the loading increments shall be applied without impact or jar. The weight of the loading platform or box shall be obtained prior to the test, and this weight shall be considered as the first increment of load.

2. If a hydraulic jack is employed, equipment for maintaining each increment of desired load constant under increasing settlement shall be provided. The gauge and the jack shall be calibrated as a unit and have a rated capacity to achieve twice the maximum test pile load.

F. The test load shall be twice the proposed working load of the pile. The standard loading procedure of ASTM D1143 shall be used except as follows: the test load shall be applied in 7 increments at a load of 50 percent, 75 percent, 100 percent, 125 percent, 150 percent, 175 percent, and 200 percent of the proposed working load.

1. After the proposed working load has been applied, and for each increment thereafter, the test load shall remain in place until there is no measurable settlement (0.001 inches) in a 2-hour period.

2. The total test load shall remain in place until settlement does not exceed 0.001 foot in 48 hours.

3. The total test load shall be removed in decrements not exceeding 25 percent of the total test load at not less than 1 hour intervals.

4. The rebound shall be recorded after each decrement is removed, and the final rebound shall be recorded 24 hours after the entire test load has been removed.

G. Under each load increment, settlement observations shall be made and recorded at 1/2 minute, 1 minute, 4 minute, and each 4 minutes thereafter after application of load increment, except in the instance of the total load where, after the 4-minute reading, the time interval shall be successively doubled until the final settlement limitation is reached and the load is removed.

H. The maximum allowable pile load shall be such that 50 percent of the applied load shall not cause a net settlement of the pile of more than 0.01 inch per ton of total applied load or shall be 50 percent of the applied load which causes a gross settlement of 1 inch, whichever is less.

2.02 COMPRESSIVE PILE LOAD TESTS – DYNAMIC TEST METHOD

A. General: Dynamic compressive pile load tests shall be in accordance with ASTM D4945 and the Florida Building Code. The load tests at locations shown on the Contract Drawings shall be made on test piles placed to the tip elevation and/or driving resistance used for establishing lengths of piles, unless otherwise directed by the Engineer. Loading,

testing and recording of data shall be under the direct supervision of the registered Professional Engineer engaged by the Contractor. A report shall be submitted in accordance with Article 1.05, Submittals.

B. Testing Apparatus and Appurtenances:

1. Dynamic Testing Apparatus: Apparatus shall be capable of recording, processing and displaying data received from the transducers and shall include a visual graphic display of force and velocity versus time, a non – volatile memory for data retention and the ability to provide computational means for verifying critical field testing parameters as determined by the Engineer. In addition, the equipment shall be capable of compensating for temperature effects and provide a self – calibration check for the recording, processing and displaying of data. As a minimum the equipment shall provide force measurements, velocity data and signaling conditioning.

2. Transducers: Transducers shall be either externally mounted, or for concrete piles the use of embedded transducers is acceptable. For externally mounted transducers, attach a minimum of two transducers at a measurement location that will not penetrate the ground. For embedded transducers, firmly attach the transducer to the pile reinforcement or to the formwork at each measurement location. Regardless of the type of transducer used, the transducer shall be calibrated to within 3% of the applicable measurement range and shall be located a minimum of 1.5 times the pile width from the ends of the pile. Installed transducers shall meet the following requirements:

a. Strain transducers: Strain transducers shall include compensation for temperature effects and shall have linear output over the full operating range. The strain transducers shall be mounted a minimum of 50 mm and no more than 100 mm apart and when attached to the pile their natural frequency shall be in excess of 2000 Hz.

b. Accelerometers: Velocity data shall be obtained using accelerometers. Accelerometers shall be directly attached to the pile surface, mounted to the pile with solid, small rigid metal blocks or embedded in the pile. The use of overhanging brackets or plastic mounting blocks is prohibited. For concrete piles the accelerometer shall be at least 1000g and 1000 Hz. For steel piles the accelerometer shall be at least 2000g and 2000 Hz.

C. Load Tests

1. The Contractor shall install test piles of the same size and materials as the permanent piles. Test piles shall be installed with the same equipment and in the same manner as the permanent piles.

2. In cases where test piles will develop resistance during testing by non-bearing materials to be excavated, the test pile shall be cased off in that material(s).

3. Permanent piles may be used as reaction piles.

4. The Contractor shall provide all equipment, instruments, personnel, accessories and appurtenances required for the tests. Testing equipment shall have been calibrated within six (6) months of load testing.

5. Dynamic load testing shall be conducted in accordance with section 6 of ASTM D4945.

2.03 PILE UPLIFT LOAD TESTS

A. Pile uplift load tests shall be in accordance with ASTM D3689 (static method) or ASTM D4945 (dynamic method) and the Florida Building Code. The load tests at locations shown on the Contract Drawings shall be made on test piles placed to the tip elevation and/or driving resistance used for establishing lengths of piles, unless otherwise directed by the Engineer. Loading, testing and recording of data shall be under the direct supervision of the registered Professional Engineer engaged by the Contractor. A report shall be submitted in accordance with Article 1.05, Submittals.

B. For testing by the static method, the proposed testing apparatus and structures to be used in making the pile load tests shall be designed by the Professional Engineer engaged by the Contractor. The Contractor shall prepare complete detailed working Drawings showing how the uplift load test will be performed including the layout of reaction, jack, and test pile. The Drawings shall include date and calibration curves of all equipment and instruments. The entire test setup and procedure will be subject to the approval of the Engineer.

C. Uplift (tensile) load tests performed by the static method shall be conducted in accordance with Section 7.2 of ASTM D3689 until the test load has reached 200 percent of the design load unless failure occurs first. The allowable uplift load shall be 50 percent of the last load increment before failure or of the test load for a completed test.

1. Apply tensile test loads in line with the central longitudinal axis of the pile.

2. Movement shall be measured with dial gages to the nearest 0.001 inch referenced to a beam which is supported at least 8 feet away from the test pile and reactions.

D. Uplift (tensile) load tests performed by the dynamic method shall meet the requirements of paragraph 2.02.

PART 3 – EXECUTION

3.01 WITNESSING

A. The pile installation and test program will be witnessed by the Engineer designated for controlled inspection.

B. The Engineer designated for witnessing shall keep records for confirmation of the test pile driving. The Contractor shall cooperate with the Engineer so that all necessary data may be obtained. The data will include the following:

1. Type and dimensions of the pile.

2. Location and pile number.

3. Type and size of hammer.

4. Steam or air pressure used to activate hammer.

5. Type and dimensions of the cushion block.

6. Actual number of blows per minute delivered by the hammer.

7. Number of blows required for each foot of penetration, and blows per inch for last six (6) inches.

8. Elevation of ground.

9. Elevation to which the pile penetrated under its own weight and under the weight of the hammer.

10. Final elevation of tip of pile.

11. Length of delays due to splicing or for any other reason and elevation of pile tip at such time.

12. Location of pile splices.

13. Such other information as the Engineer may deem necessary.

3.02 INSTALLATION OF PRODUCTION PILES

A. The method of installing the permanent piles shall be the same as that used to install the test piles, except where a change in procedure is ordered by the Engineer.

B. The installation procedure established in the test program shall not be changed without the written approval of the Engineer.

3.03 REMOVALS

A. Upon completion of the test program, the Contractor shall remove all equipment, and remove or cutoff piles not in permanent locations or rejected and restore the site to a condition satisfactory to the Engineer.

B. Test piles and reaction piles which are driven at non-permanent pile locations shall be removed or cutoff at least 18 inches below the bottom of the foundation and abandoned.

- END OF SECTION -

SECTION 02481

TREE RELOCATION AND PROTECTION

PART 1 – GENERAL

1.01 WORK TO BE PERFORMED AND WORK INCLUDED

A. Prepare and relocate trees and palms designated for relocation within the project boundaries, to include all aspects of preparation, relocation, protection, and maintenance.

B. Protection and care of existing trees and palms to remain within the project boundaries, to include all aspects of protection, pruning, fertilization, and watering.

C. Watering by water truck.

D. Follow up maintenance as required by these Specifications.

E. Labor, materials, equipment, and services to complete all preparation, relocations and protection work as shown on the Drawings, as specified herein, or both.

1.02 SUBMITTALS

A. Copy of all permits submitted for tree relocations.

B. The Contractor shall utilize the services of a Certified Arborist for preparation of all tree removal and tree relocation permits as well as supporting documentation.

C. Verification of Qualifications: The Contractor shall provide a list of references and project list of a minimum of five (5) projects that the Contractor has successfully completed that are similar in scope and nature.

D. List of all equipment to be utilized during tree preparation and transplanting.

E. Literature on specified wetting agents, fertilizers, and soil conditioners.

1.03 APPLICABLE STANDARDS AND SPECIFICATIONS

A. Comply with the following standards and specifications for all materials, methods, and workmanship unless otherwise noted:

1. Codes and Standards of the American Association of Nurserymen.

2. Codes and Standards of the National Arborists Association.

3. Codes and Standards of the International Society of Arboriculturists.

1.04 PERMITS

A. The Contractor shall secure any permits required, including tree removal and tree relocation permits, in order to complete the work under this Section. Cost of permit

fees associated with tree removals and/or relocations shall be paid for under the "Permits Allowance" bid item.

1.05 DESCRIPTION

A. Trees to be relocated within the project area will be specifically designated in the field as project work progresses or as noted in tree disposition plans on the drawings.

B. Existing trees to be relocated shall be crown pruned and be treated with soil amendments prior to relocation.

C. Existing trees to be relocated or to remain shall be protected with barricades during construction. Trees or shrubs to remain which are scarred or destroyed shall be replaced at the direction of the City Forester with the same species, size, and quality at no cost to the City.

D. Tree pits resulting from relocated material shall be backfilled with clean fill and brought flush with surrounding grade.

1.06 GUARANTEES

A. The Contractor shall guarantee his work in the following way:

1. Any tree or palm that dies or is deemed in unacceptable condition for one year following final project acceptance shall be removed by the Contractor, including root ball, and backfilling of pit, at no cost to the City.

2. The Contractor shall provide a comparable specimen at no additional cost to the City.

3. The guarantee shall be enforced if it is deemed by the City Forester that tree mortality or decline is a product of negligence by the Contractor.

PART 2 – MATERIALS

2.01 SOIL AMENDMENTS

A. Root stimulant shall be Roots Biostimulant, concentrate or powder, as manufactured by LISA Products Corp., (305) 797-6801, or City-approved equal. Stimulant shall be applied either as a wash, or by injection, mixed per manufacturer's recommendation.

B. Soil conditioner shall be Lesco Wet, as manufactured by Lesco, Inc. or NoburN, as manufactured by Roots or City-approved equal.

C. Minor element liquid fertilizer mix shall be Micro Mix liquid as produced by Lesco, Inc., or equal; to be diluted at a rate of 1 gallon per 100 gallons of water and applied at a rate of 50 gallons per 1,000 square feet of canopy, or Iron Roots, applied per manufacturer's instructions.

D. Time Release Fertilizer tablets shall be Agriform, 15 grams, designation 8-8-8; or approved equal.

2.02 EQUIPMENT

A. Soil amendments shall be injected into the soil by means of a spray apparatus utilizing mechanical agitation to keep powdered amendments suspended.

B. Root pruning equipment shall be designed for this task and shall produce clean cuts of roots without damage to the resulting root ball.

C. Relocation equipment shall be capable of lifting and transporting trees without damage.

2.03 SOIL

A. Soil to be placed once trees or palms are transplanted shall meet the requirements specified in the Contract Documents.

2.04 WATER

A. Water shall be clean and potable.,

2.05 MULCH

A. Grade A Eucalyptus mulch, free of viable weed seeds.

2.06 BRACING AND STAKES

A. All bracing and stakes shall be pressure treated pine. Compression bands shall be stainless steel.

PART 3 – EXECUTION

3.01 EXCAVATING NEAR EXISTING TREES

A. Maintain a minimum 6-foot clearance from all tree trucks except palm trees.

B. Use a 24-inch minimum depth saw cut in pavement or dirt/gravel roadway before start of excavation in areas where there are large trees close to the construction area. No coating application is required after saw cutting roots.

3.02 PREPARATION FOR RELOCATION OF TREES AND PALMS WITHIN THE PROJECT BOUNDARIES

A. Crown Pruning: All trees and palms shall be crown pruned prior to relocation.

1. Broadleaf Trees:

a. All trees are to be trimmed by thinning the crown only, and not by reducing crown dimensions. Trim to conform to NAA Standards,

including removal of dead wood.

b. Repair any existing injuries to trees including cavities and machinery marks.

2. Palms:

a. Remove all fruits and seed pods, and all but the seven (7) youngest fronds.

b. Tie all remaining fronds with untreated cotton twine or burlap straps.

B. Fertilization and Watering:

1. Preparation: Clear the root ball area of all foreign material, trash, etc., to expose undisturbed soil.

2. Application/Schedule:

a. Trees shall be deep injection fertilized a minimum of 14 days prior to relocation. Specified liquid fertilizer shall be used and applied at the concentration and application rates stated herein.

b. Mix wetting agent, biostimulant, and minor element mix to produce a single fluid with each component included at the specified concentration. Inject into the root zone within the limits of proposed root ball at the rate of 50 gallons fluid per 1,000 square feet of tree canopy, using only approved spray equipment.

c. Form an earth berm 6 inches high outside the proposed root ball prior to watering. Water application shall saturate the root ball to its entire depth.

C. Root Pruning:

1. Technique:

a. All trees shall be excavated by digging a trench a minimum of 36 inches deep by 6 inches wide, either by hand or with a trenching machine designed for this purpose. Provide continuous trenching around the tree or palm at a minimum distance of 30 inches from the trunk. Hand cut broadleaf tree roots after trenching to produce clean cuts with no splits or tears.

b. Barricades: Barricade all root pruned trees and palms at outside of soil berm with minimum 4-foot chain link fence or other barricade approved by the City.

c. Timing:

1) All oaks to be relocated shall be maintained for a minimum of

10 weeks after root pruning prior to relocation.

2) Palms shall be maintained a minimum of 4 weeks prior to relocation.

3.03 RELOCATION OF TREES AND PALMS

A. General: Trees to be relocated shall be as directed by the Engineer.

B. Preparation:

1. Trees and palms shall be injected with soil amendments a minimum of 14 days prior to relocation. Apply at manufacturer's recommended concentration and application rates.

2. Trees and palms shall be thoroughly soaked to the full depth of the root ball daily for seven (7) consecutive days prior to relocation.

3. Accurately locate position and elevation where all trees are intended to be planted, for verification by City Forester. Verify that no overhead or underground utilities, existing or proposed, conflict with proposed locations.

4. Ascertain that all proposed paths for machinery are clear of utilities and other obstructions.

C. Excavation of Tree Pits: Dig all pits with vertical sides and flat bottom. Existing soil may be utilized as backfill as directed by the City Forester. All Tree Pits to be lined with root barrier adjacent to roadways and sidewalks as directed by City.

D. Digging and Handling - Broadleaf Trees:

1. Notify City 2 business days in advance of each relocation to allow for observation of procedures.

2. Determine line of previous root pruning and excavate around root mass to leave area 12 inches out from line of root pruning undisturbed. Digging shall be accomplished so as to produce clean cuts on all roots without tearing or splitting. Trenching shall be a minimum of 36 inches deep.

3. Trees are to be handled in such a way as to avoid damage to bark and limbs subject to support cables or chains. Attach padded support cables or chains at multiple points where possible. Alternatively, tree trunks may be drilled and doweled for broadleaf trees. The City Forester reserves the right to require doweling in lieu of lifting by straps.

4. Root balls are to be undercut prior to lifting. Do not force tree from ground prior to undercutting. Ball depth to be determined upon assessing conditions at time of trenching, to keep intact the entire root ball.

5. Trees shall be properly wrapped during moving so trunks will not be scarred and damaged and to avoid broken limbs. Broken limbs or scarred trunks shall

cause tree to be unacceptable and rejected at the City's option. Broken limbs and wounds which do not (in the judgment of the City Forester) cause the tree to be rejected shall be cleanly cut.

6. Transport plant material on vehicles of adequate size to prevent overcrowding, broken limbs, foliage damage or root ball damage.

7. Root balls and foliage shall be kept moist during all phases of relocation.

8. Partially backfill tree pits with 12 inches of approved planting soil prior to setting tree. This layer of soil to be thoroughly drenched prior to relocation to achieve a stable platform at the correct elevation so that the top of rootball is 1 inch above proposed grade.

9. Rotate tree prior to setting to achieve best positioning relative to adjacent trees and viewing angles.

E. Backfilling:

1. Flood bottom soil layer to settle tree into best position and to remove air pockets.

2. Continue to flood root ball as planting soil is deposited to ensure removal of all air pockets.

3. Create a saucer to retain water.

F. Bracing:

1. Support tree with machinery until bracing is complete.

2. Buttresses may support separate trunks on multiple trunk trees.

3. Maintain braces until completion of project. Removal of braces shall be by others.

G. Watering: Relocated trees shall by watered using water-truck. Watering schedule shall be: once per day for first 6 weeks; followed by 3 times per week for following 6 weeks.

- END OF SECTION -

SECTION 02630

STORM DRAINAGE FACILITIES

PART 1 – GENERAL

1.01 SUMMARY

A. Work under this section shall consist of providing all labor, plant facilities, materials, tools, equipment, shop drawings and supervision necessary and required to install all of the storm drainage facilities, including piping, fittings, structures, bedding, and backfilling, as specified in accordance with the contract documents.

1.02 WORK INCLUDED

A. Provide all labor, materials, necessary equipment and services to complete the Storm Drainage Facilities work, as indicated on the drawings, as specified herein or both, except as for items specifically indicated as "NIC ITEMS".

1.03 REFERENCE STANDARDS

A. American Society for Testing and Materials (ASTM)

1. A185 – Steel Welded Wire Fabric, Plain, for Concrete Reinforcement
2. A615 – Deformed and Plain Billet-Steel Bars for Concrete Reinforcement
3. A760 – Corrugated Steel Pipe, Metallic-Coated for Sewers and Drains
4. A798 – Installation of Corrugated-Steel Pipe for Sewers and Other Applications
5. A929 – Metallic-Coated by the Hot-Dip Process for Corrugated Steel Pipe
6. C76 – Reinforced Concrete Culvert, Storm Drain, and Sewer Pipe
7. C478 – Precast Reinforced Concrete Manhole Sections
8. C1479 – Installation of Reinforced Concrete Pipe
9. C990-01A – Joints for Concrete Pipe, Manholes, and Precast Box Sections Using Preformed Flexible Joint Sealants
10. D2321 – Installation of Thermoplastic Pipe for Sewer/Gravity-Flow Applications
11. D3034 – Type PSM Poly(Vinyl Chloride) (PVC) Sewer Pipe and Fittings

12. D3212 – Joints for Drain and Sewer Plastic Pipes Using Elastomeric Seals

13. F477 – Elastomeric Seals (Gaskets) for Joining Plastic Pipe

14. F794 – Poly(Vinyl Chloride) (PVC) Profile Gravity Sewer Pipe and Fittings Based on Controlled Inside Diameter

15. F949 – Poly(Vinyl Chloride) (PVC) Corrugated Sewer Pipe With a Smooth Interior and Fittings

B. American Association of State Highway and Transportation Officials (AASHTO)

1. M198 – Joints for Circular Concrete Sewer and Culvert Pipe Using Flexible Watertight Gaskets

2. M252 – Corrugated Polyethylene Drainage Tubing

3. M274 – Aluminum-Coated (Type 2), for Corrugated Steel Pipe

4. M294 – Corrugated Polyehtylene Pipe. 12 to 14-inch Diameter

5. M36 – Metallic Coated Corrugated Steel Culverts and Underdrains

6. M190 – Bituminous Coated Corrugated Metal Culvert Pipe and Pipe Arches

7. M199 – Standard Specification for Precast Reinforced Concrete Manhole Sections

C. American Water Works Association (AWWA)

1. C110 – Ductile-Iron and Gray-Iron Fittings, 3 in through 48 in (75 mm through 1200 mm), for Water and Other Liquids (revision of ANSI/AWWA C110/A21.10-93)

2. C111 – Rubber-Gasket Joints for Ductile-Iron Pressure Pipe and Fittings

3. C151 – Ductile-Iron Pipe, Centrifugally Cast, for Water

D. American Concrete Institute (ACI)

1. 301 – Structural Concrete for Buildings, Specifications for

2. 318 – Building Code Requirements for Structural Plain Concrete

1.04 EXISTING UTILITIES

A. Furnish temporary support, adequate protection and maintenance of all underground and surface utility structures, drains, sewers, cables, etc., and other obstructions encountered in the progress of the work.

B. When the grade of alignment of the pipe is obstructed by existing utility structures, such as conduits, ducts, pipes, branch connections to water or sewer mains, and other

obstructions, the obstructions shall be permanently supported, relocated, removed or reconstructed by the Contractor in cooperation with the owners of such structures. No deviation shall be made from the required line or grade except as directed in writing by the Engineer.

C. It shall be the responsibility of the Contractor to notify the owners of existing utilities in the area of construction a minimum of 48 hours prior to any excavation adjacent of such utilities, so that field locations of said utilities may be established.

D. Temporary relocation of existing utilities (to be removed) to accommodate installation of storm drainpipe shall be the responsibility of the Contractor and approved by the Engineer. No additional payment shall be made for temporary relocation of existing utilities and shall be considered part of the bid item for the pipe.

1.05 QUALITY ASSURANCE

A. All costs related to re-inspection due to failures shall be paid for by the Contractor at no additional expense to the City. City reserves the right to direct any inspection that is deemed necessary. Contractor shall provide free access to site for inspection activities.

PART 2 – PRODUCTS

2.01 REINFORCED CONCRETE PIPE (RCP)

A. REINFORCED CONCRETE PIPE – ASTM C 76

1. Unless noted otherwise, all RCP pipe shall be in accordance with the requirements of “Reinforced Concrete Pipe – ASTM C 76”.

2. RCP shall be manufactured in accordance with ASTM C 76, Wall Type B or C, unless otherwise specified herein; and shall be minimum Type III, subject to recommendation from the pipe manufacturer based on project specific requirements unless noted otherwise in the Contract Documents. Minimum pipe laying lengths shall be four (4) feet. Portland cement shall conform to ASTM C 150, Type II.

3. Pipe shall have bell and spigot ends with O-ring rubber gaskets. The gaskets shall be smooth solid rubber of circular and uniform cross section conforming to ASTM C 43. The spigot end of the pipe shall contain a special groove or slot to receive and hold the gasket in position during the joint assembly. The complete joint shall be subjected to hydrostatic tests conforming to ASTM C 443.

4. All pipe and specials shall be aged at the manufacturing plant for at least fourteen (14) days before delivery to the job site.

B. REINFORCED CONCRETE PIPE – ASTM C361

1. Reinforced concrete low-head pressure pipe shall be manufactured in accordance with ASTM C361, and shall be minimum Type III, subject to recommendation from the pipe manufacturer based on project specific

requirements unless noted otherwise in the Contract Documents. Minimum pipe laying lengths shall be twelve (12) feet.

2. Pipe shall have steel joint rings with O-ring rubber gaskets. The gaskets shall be smooth solid rubber of circular and uniform cross section and shall be confined in an annular space formed by shoulders on the bell and spigot or in a special groove in the spigot to receive and hold the gasket in position during the joint assembly. The complete joint shall be subjected to hydrostatic tests conforming to ASTM C361.

3. All pipe and specials shall be aged at the manufacturing plant for at least fourteen (14) days before delivery to the job site.

C. CONCRETE CULVERT AND DRAINPIPE

1. All reinforced concrete culvert and drain pipe shall be manufactured in accordance with ASTM C76, Wall Type B or C, and shall be of the class that equals or exceeds the pipe class as specified herein or as shown on the Contract Drawings. Minimum pipe laying lengths shall be four (4) feet. Testing shall be in accordance with the FDOT Road and Bridge Manual (latest edition). Portland cement shall conform to ASTM C150, Type II.

2. Joints for the reinforced concrete culvert and drain pipe shall have bell and spigot ends with flexible plastic gaskets meeting the requirements of AASHTO M198, Type B.

3. All pipe shall be aged at the manufacturing plant for at least fourteen (14) days before delivery to the job site.

2.02 HIGH PERFORMANCE POLYPROPYLENE PIPE

1. High Performance polypropylene storm pipe shall be produced by a reputable manufacturer engaged in the full-time business of manufacturing of piping.

2. All High-Performance polypropylene storm pipe shall have a smooth wall interior and annular exterior corrugations conforming to the requirements of ASTM F2736 and AASHTO M330.

3. Joints: Pipe shall be joined with a gasket integral bell and spigot joint meeting the requirements of ASTM F2736. Joint must be completely watertight according to the requirements of ASTM 3212. Spigots shall have gaskets meeting requirements of ASTM F477. The gasket joint on the inside of the bell shall be installed on the pipe at the plant by the pipe manufacturer and covered with a removable, protective wrap to ensure the gasket is free from debris. A joint lubricant provided from the manufacturer shall be used on the gasket and bell during assembly. All materials and accessories for the gasket joint and the methods of jointing shall be in strict conformance with the pipe manufacturer's direction and recommendation.

2.03 HIGH DENSITY POLYETHYLENE PIPE:

1. High Density Polyethylene Pipe (HDPE), shall be corrugated type, smooth interior, conforming to ASTM F2648, ASTM F477, ASTM 3212, AASHTO M252 and AASHTO M294 and shall be smooth interior and annular exterior corrugations with a Manning's "n" value of 0.012l.

2. Basic Material:

   a. Extruded Pipe and Blow Molded Fittings: Pipe and fittings shall be made of virgin PE compounds which conform with the requirements for Type III, Category 4 or 5, Grade P33, Class C; or Grade P34, Class C, as defined and described in ASTM D 1248.

   b. Rotational Molded Pipe and Fittings: Pipe and fittings shall be made of virgin PE compounds which conform with the requirements of Type III, Category 3, Grade P33, Class C: or Grade P34, Class C, as defined and described in ASTM D1248.

3. Corrugated Polyethylene Pipe shall meet the requirements as describe in ASTM D 2412 for pipe stiffness.

4. Corrugated Polyethylene Pipe shall be in accordance for brittleness with ASTM D 2444.

2.04 PVC CORRUGATED PIPE

1. PVC Corrugated storm pipe shall be produced by a reputable manufacturer engaged in the full-time business of manufacturing of piping and conform to the requirements of ASTM F949.

2. PVC Corrugated storm pipe shall have smooth wall interior and annular exterior corrugations. Pipe shall be made of PVC having a minimum cell classification of 12454 per ASTM D1784.

3. Joints: Pipe shall be joined with a gasket integral bell and spigot joint meeting the requirements of ASTM F2736. Joint must be completely water tight according to the requirements of ASTM 3212. Spigots shall have gaskets meeting requirements of ASTM F477. The gasket joint on the inside of the bell shall be installed on the pipe at the plant by the pipe manufacturer and covered with a removable, protective wrap to ensure the gasket is free from debris. A joint lubricant provided from the manufacturer shall be used on the gasket and bell during assembly. All materials and accessories for the gasket joint and the methods of jointing shall be in strict conformance with the pipe manufacturer's direction and recommendation.

PART 3 – EXECUTION

3.01 GENERAL

A. Contractor shall only use the pipe material as specified on the plans. Alternate materials

will not be allowed unless approved by the Engineer in writing.

B. The Contractor shall install all drainage structures and pipe in the locations shown on the drawings and/or as approved by the City. Pipe shall be of the type and sizes specified on the drawings and shall be laid accurately to line and grade. Structures shall be accurately located and properly oriented.

C. Excavation and Backfilling for Utilities – The provisions of the Contract Documents for Excavation and Backfilling shall govern all work under this Section.

D. Storage and Handling of Pipe – All pipe shall be protected against impact, shock and free fall, and only equipment of sufficient capacity and proper design shall be used in the handling of the pipe. Storage of pipe on the job shall be in accordance with the pipe manufacturer's recommendations.

E. Damage to Pipe

1. Pipe which is defective from any cause, including damage caused by handling, and determined by the City as unrepairable, shall be unacceptable for installation and shall be replaced at no cost to the City and as directed by the City; and,

2. Pipe that is damaged or disturbed through any cause prior to acceptance of the work, shall be repaired realigned or replaced as directed by the City, at the Contractor's expense.

F. Manholes, catch basins and drain inlets shall be constructed as soon as the pipe laying reaches the location of the structures. Should the Contractor continue his pipe laying without making provisions for completion of the structures, the City shall have the authority to stop the pipe laying operations until the structure is completed.

G. Any structure, which is mislocated or oriented improperly, shall be removed and re-built in its proper location, alignment and orientation at the Contractor's expense.

3.02 EXCAVATION AND BACKFILL

A. Excavation and backfill shall be as per the Section entitled "Excavation and Backfill for Utilities".

3.03 PIPE INSTALLATION

A. Laying Pipe

1. Unloading and Handling: All pipes shall be unloaded and handled with reasonable care. Pipes shall not be rolled or dragged over gravel or rock during handling. The Contractor shall take necessary precautions to ensure the method used in lifting or placing the pipe does not induce stress fatigue in the pipe and the lifting device used uniformly distributes the weight of the pipe along its axis or circumference.

2. Each length of pipe shall be inspected for defects and cracks before carefully lowered into the trench. Any damaged or any pipe that has had its grade disturbed after laying shall be removed and replaced. Bituminous coated pipe shall be handled with special care and repair of damaged coating shall conform with AASHTO M190.

3. Lay pipe on prepared foundation starting at the downgrade end according to line and grade with the necessary drainage structures, fittings, bends and appurtenances as shown on the drawings. Rigid pipes shall be laid with the bell or groove ends upgrade with the spigot or tongue fully inserted. Reinforced concrete pipe shall be installed in accordance with ASTM C1479.

4. Pipe sections shall be firmly joined together with appropriate gaskets or bands.

5. Pipe shall be protected during handling against impact shocks and free falls. Pipe shall be kept clean at all times and no pipe shall be used that does not conform to the Specifications.

6. The laying of the pipe shall be commenced at the lowest point with spigot ends pointing in the direction of flow. All pipe shall be laid with ends abutting and true to line and grade. They shall be laid in accordance with manufacturer's requirements as approved by the Engineer.

7. Pipe shall be laid accurately to the line and grade as designated on the plans. Preparatory to making pipe joints, all surfaces of the portions of the pipe to be jointed, or of the factory-made jointing material, shall be clean and dry. Lubricant, primers, adhesive, etc., shall be used as recommended by the pipe or joint manufacturer's specifications. The jointing materials or factory fabricated joints shall then be placed, fitted, joined and adjusted in such a manner as to obtain a watertight line. As soon as possible after the joint is made, sufficient backfill material shall be placed along each side of the pipe to prevent movement of pipe offline and grade.

8. The exposed ends of all pipe shall be suitably plugged to prevent earth, water, or other substances from entering the pipe when construction is not in progress.

3.04 CONCRETE ENCASEMENT OF DRAINAGE PIPE

A. Trenches in which encasement for pipe are to be placed may be excavated completely with mechanical equipment. Prior to formation of the encasement, temporary supports consisting of timber wedges or masonry shall be used to support the pipe in place. Temporary supports shall have minimum dimensions and shall support the pipe at no more than two places, one at the bottom of the barrel of the pipe adjacent to the shoulder of the socket and the other near the spigot end.

3.05 DRAINAGE STRUCTURES

A. All structures shall be built to the line and grade shown on drawings. All reinforced concrete work shall be in strict conformance with the concrete specifications contained herein. After erection of the forms and placing of the steel, the Contractor must have inspection and approval from the Engineer before placing any concrete. After removal of

the forms, the Contractor shall backfill around each structure with approved granular fill. The fill shall be placed in layers not exceeding 8 inches in depth measured loose and compacted to 98% of the maximum density as determined by the modified proctor, AASHTO T-180. No defects of any kind in the pipe section will be accepted. All pipe stubs shall be made of the same type of pipe. Pipe stubs shall be sealed with a concrete plug, watertight. The ends of the pipes which enter masonry shall be neatly cut to fit the inner face of the masonry. Cutting shall be done before the pipes are built in.

3.06 INFILTRATION AND EXFILTRATION TESTS

A. Tests for watertightness shall be made by the Contractor. Leakage of completed storm drainage system shall not exceed 500 U.S. gallons per day per inch diameter per mile of pipe under minimum hydrostatic pressure of 2 feet. Test shall be conducted in a manner satisfactory to the Engineer. Any portion of the project not conforming to the above requirements shall be corrected by the Contractor, at his own expense, prior to acceptance by the Engineer.

3.07 PROTECTION AND CLEANING

A. The Contractor shall maintain all pipe installations and drainage structures in a condition such that they will function continuously and shall be kept clean of silt, debris and other foreign matter from the pipe and drainage structure is installed until the project is accepted.

3.08 FINAL INSPECTION

A. All storm sewers shall be lamped by the Engineer prior to acceptance of the work. Repairs or misalignment shown necessary by the tests shall be corrected at the Contractor's expense. All sewers shall be thoroughly cleaned before being placed into use and shall be kept clean until final acceptance by the Engineer.

B. Upon completion of the work and before final acceptance by the City, the entire drainage system shall be subject to a final inspection in the presence of the City and/or Engineer. The work shall not be considered as complete until all requirements for line, grade, cleanliness, and workmanship have been completed.

C. For flexible pipes, 48 inches and less in diameter, the Contractor shall submit to the Engineer a video file and Pipe Ovality Report for each pipe run using low barrel distortion video equipment with laser profile technology, non-contact video micrometer and associated software. The report shall include pipe stationing and pipe deformation/deflections measurements with deflections limits clearly delineated. Laser profiling and measurement technology must be certified by the company performing the work to be in compliance with the calibration criteria posted at https://www.fdot.gov/construction/Engineers/Environment/Laser.shtm. The Engineer may waive this requirement for side drains and cross drains which are short enough to inspect manually from each pipe end.

- END OF SECTION -

SECTION 02667

HYDRAULIC STRUCTURES TESTING

PART 1 – GENERAL

1.01 THE REQUIREMENT

A. The Contractor shall perform all cleaning, flushing, testing, and disinfection of all constructed water retaining structures and appurtenant piping, including conveyance of test water from City-designated source to point of use, and including all disposal thereof, complete and acceptable, all in accordance with the requirements of the Contract Documents.

B. The City will provide the Contractor with one tank fill of reclaimed or potable water for each structure for the completion of leakage testing. These tank fills shall be free of charge.

C. Provide all temporary piping (i.e., a calibrated manometer) as required to measure the water level and water elevation in the tank. Assist the Engineer in recording water levels.

1.02 STRUCTURES TO BE TESTED

A. The following structures shall be tested:

1. Outfall Station

   a. Intake Structure

   b. Wet Well

   c. Effluent Box

2. Inlet Station

   a. Intake Structure

   b. Wet Well

   c. Effluent Box

1.03 WATERTIGHTNESS OF STRUCTURES

A. It is the intent of these Specifications that all concrete work, sealing work around built-in items and penetrations be performed as required to ensure that groundwater, surface water, and water or liquids in tanks, channels and containers will not intrude into any equipment rooms, pipe trenches, habitable areas or other generally dry areas.

B. The required water tightness shall be achieved by quality concrete construction and proper sealing of all joints and penetrations.

C. Each unit shall be tested separately, and the leakage tests shall be made prior to backfilling and before equipment is installed.

D. The Contractor shall provide at his own expense all labor, material, temporary bulkheads, pumps, water measuring devices, etc., necessary to perform the required tests.

E. Built-In Items and Penetrations

1. All pipe sleeves, built-in items, and penetrations shall be sealed as detailed and as required to ensure a continuous watertight seal.

2. Penetration through built-up roofing areas shall be made prior to application of the built-up roofing utilizing suitable sleeves and flashings as required.

3. If roofing surfaces are penetrated after roofing has been applied, the waterproofing integrity shall be restored.

F. Notification by Engineer: If any leaks, in excess of the specified amount, are not remedied by the Contractor within four (4) weeks of notification by the Engineer, regardless of whether the cause of these leaks is or is not determined, the Engineer shall have the authority to have these leaks repaired by others. The cost of repairs, by others, shall be deducted from monies due or to become due to the Contractor.

PART 2 – PRODUCTS

2.01 MATERIALS REQUIREMENTS

A. All water holding structures shall be thoroughly cleaned after all work is completed and before the structure is coated, tested, and placed in service. Cleaning agents shall not contain hazardous substances or deleterious compounds that would cause a violation of water quality or negative health effects if introduced into the water supply during disinfection and filling operations. Cleaning agents shall be submitted to Engineer for review prior to use.

B. Temporary valves, bulkheads, or other water control equipment and materials shall be as determined by the Contractor subject to the Engineer's review. No materials shall be used which would be injurious to the construction or its future function.

PART 3 – EXECUTION

3.01 GENERAL

A. The Contractor shall make all necessary provisions for conveying the water from the source to the points of use and conduct all disinfection and tank filling processes.

B. All hydraulic structures and appurtenant pressure piping shall be tested. All testing operations shall be done in the presence of the Engineer. The testing specified below must be satisfactorily completed prior to project completion.

C. Release and disposal of water from structures, after testing has been completed, shall be as acceptable to the Engineer and CITY.

3.02 HYDRAULIC STRUCTURES TESTING

A. General: Testing shall be performed prior to backfilling, except where otherwise acceptable to the Engineer. Testing shall not be performed sooner than 14 days after all portions of structure walls and associated roof systems have been completed. The test shall consist of filling the structure with water to the maximum operating water surface. All visible leakage shall be repaired in accordance with repair methods specified in applicable sections of Division 3 and 15 of these Specifications.

B. Leakage Test and Repairs: Water tightness testing shall be in accordance with the 3-day test specified in ACI 350.1 Specifications for Tightness Testing of Environmental Engineering Concrete Containment Structures.

Should the structure fail to pass the test, the test may be repeated once. If, at the end of 14 days, the structure still fails to pass the leakage test, the Contractor shall empty the structure as acceptable to the Engineer and shall examine the interior for evidence of any cracking or other conditions that might be responsible for the leakage. Any cracks shall be "vee'd" and sealed with polyurethane sealant in accordance with the Section entitled, "Cast-In-Place Concrete." Any evidence of leakage shall be repaired. Following these operations, the Contractor shall again test the structure. The structure will not be accepted as completed until the water loss leakage test is passed and all visible leakage repaired.

- END OF SECTION -

SECTION 02710

LIMEROCK BASE

PART 1 – GENERAL

1.01 DEFINITIONS

A. Completed Course: Compacted, unyielding, free from irregularities, with smooth, tight, even surface, true to grade, line, and cross section.

B. Completed Lift: Compacted with uniform surface reasonably true to cross-section.

PART 2 – MATERIALS

2.01 LIMEROCK BASE ROCK

A. The material used in limerock base shall be material classified as Miami Oolite Formation.

B. The minimum of carbonates of calcium and magnesium in the limerock shall be 70 percent. The maximum percentage of water-sensitive clay material shall be 3.

C. Limerock material shall be uniform in color and not contain cherty or other extremely hard pieces, or lumps, balls, or pockets of sand or clay size material in sufficient quantities as to be detrimental to the proper bonding, finishing, or strength of the limerock base.

D. The limerock base shall be uniformly graded from coarse to fine with 97 percent passing a 3-1/2-inch sieve, 80 percent passing a 2-inch sieve. The fine material shall consist entirely of dust of fracture. All crushing or breaking up, which might be necessary in order to meet such size requirements, shall be done before the material is placed on the road.

E. Physical Qualities:

1. Liquid Limit, AASHTO T89: Maximum 35 percent.

2. Nonplastic.

3. Limerock material shall have an average limerock bearing ratio (LBR) value of not less than 100.

2.02 SOURCE QUALITY CONTROL

A. Contractor: Perform tests necessary to locate acceptable source of materials meeting specified requirements.

B. Final approval of aggregate material will be based on materials' test results on installed materials.

C. Should separation of coarse from fine materials occur during processing or stockpiling, immediately change methods of handling materials to correct uniformity in grading.

PART 3 – EXECUTION

3.01 SUBGRADE PREPARATION

A. As specified in the Contract Documents.

B. Obtain City's acceptance of subgrade before placement of limerock base rock.

C. Do not place base materials on soft, muddy subgrade.

3.02 EQUIPMENT

A. Use mechanical rock spreaders, equipped with a device that strikes off the rock uniformly to laying thickness, capable of producing even distribution. For areas where the use of a mechanical spreader is not practicable, the Contractor may spread the rock using bulldozers or blade graders.

3.03 HAULING AND SPREADING

A. Hauling Materials:

1. The limerock shall be transported to the point where it is to be used and dumped on the end of the preceding spread.

2. Do not haul over surfacing in process of construction.

3. Loads: Of uniform capacity.

4. Maintain consistent gradation of material delivered; loads of widely varying gradations will be cause for rejection.

B. Spreading Materials:

1. Distribute material to provide required density, depth, grade and dimensions with allowance for subsequent lifts.

2. Produce even distribution of material upon roadway without segregation.

3. Should segregation of coarse from fine materials occur during placing, immediately change methods of handling materials to correct uniformity in grading.

3.04 CONSTRUCTION OF COURSES

A. General: Complete each lift in advance of laying succeeding lift to provide required results and adequate inspection.

B. Limerock Base:

1. Maximum Completed Lift Thickness: 6 inches or equal thickness.

2. Completed Course Total Thickness: As shown on the Drawings.

3. Spread lift on preceding course to required cross-section.

4. Lightly blade and roll surface until thoroughly compacted.

5. Blade or broom surface to maintain true line, grade, and cross-section.

C. Gravel Surfacing:

1. Maximum Completed Lift Thickness: 6 inches or equal thickness.

2. Completed Course Total Thickness: As shown on the Drawings.

3. Spread on preceding course in accordance with cross-section shown.

4. Blade lightly and roll surface until material is thoroughly compacted.

3.05 ROLLING AND COMPACTION

A. Commence compaction of each layer of base after spreading operations and continue until density of 98 percent of maximum density has been achieved as determined by AASHTO T 180.

B. Density tests will be conducted every 500 square yards or as directed by the City.

C. Roll each course of surfacing until material shall not creep under roller before succeeding course of surfacing material is applied.

D. Commence rolling at outer edges of surfacing and continue toward center; do not roll center of road first.

E. When the material does not have the proper moisture content to ensure the required density, wet or dry, as required. When adding water, uniformly mix it in by disking to the full depth of the course that is being compacted. During wetting or drying operations, manipulate as a unit, the entire width and depth of the course that is being compacted.

F. Place and compact each lift to required density before succeeding lift is placed.

G. Bind up preceding course before placing leveling course. Remove floating or loose stone from surface.

H. Blade or otherwise work surfacing as necessary to maintain grade and cross-section at all times, and to keep surface smooth and thoroughly compacted.

I. Surface Defects: Remedy surface defects by loosening and rerolling. Reroll entire area, including surrounding surface, until thoroughly compacted.

J. Finished Surface: True to grade and crown before proceeding with surfacing.

3.06 SURFACE TOLERANCES

A. Finished Surface of Base Course and Leveling Course: Within plus or minus 0.04-foot of grade shown at any individual point.

B. Compacted Surface of Leveling Course: Within 0.04-foot from lower edge of 10-foot straightedge placed on finished surface, parallel to centerline.

C. Overall Average: Within plus or minus 0.01-foot from crown and grade specified.

3.07 GRAVEL DRIVEWAY RESURFACING

A. Replace gravel surfacing on driveways which were gravel surfaced prior to construction.

B. Provide compacted gravel surfacing to depth equal to original, but not less than 4 inches.

C. Leave each driveway in as good or better condition as it was before start of construction.

3.08 FIELD QUALITY CONTROL

A. In-Place Density Tests:

1. Construct base course so areas shall be ready for testing.

2. Allow reasonable length of time for City to perform tests and obtain results during normal working hours.

3.09 CLEANING

A. Remove excess material, clean stockpile areas of aggregate.

- END OF SECTION -

SECTION 02772

ASPHALT CONCRETE PAVEMENT

PART 1 – GENERAL

1.01 STANDARD SPECIFICATIONS

A. When referenced in this Section, Standard Specifications shall mean Florida Department of Transportation, Standard Specifications for Road and Bridge Construction, current edition.

1.02 QUALITY ASSURANCE

A. Qualifications:

1. Independent Testing Laboratory: In accordance with ASTM E329.

2. Asphalt concrete mix formula shall be prepared by an approved certified independent laboratory under the supervision of a certified asphalt technician.

1.03 SUBMITTALS

A. The Contractor shall submit its proposed formula for the asphaltic concrete paving for review in accordance with the Section entitled “Submittals”.

1.04 ENVIRONMENTAL REQUIREMENTS

A. Temperature: Do not apply asphalt materials or place asphalt mixes when ground temperature is lower than 10 degrees C (50 degrees F), or air temperature is lower than 4 degrees C (40 degrees F). Measure ground and air temperature in shaded areas away from heat sources or wet surfaces.

B. Moisture: Do not apply asphalt materials or place asphalt mixes when application surface is wet.

PART 2 – MATERIALS

2.01 MATERIALS

A. Prime Coat: Cut-back asphalt, Grades RC-70 or RC-250 meeting the requirements of the Standard Specifications.

B. Tack Coat: Emulsified asphalt, Grade RS-2, SS-1, or SS-1H meeting the requirements of the Standard Specifications. The bituminous material shall be heated to a suitable consistency as directed by the City.

C. Sand (Blotter Material): Clean, dry, with 100 percent passing a 4.75 mm (No. 4) sieve, and a maximum of 10 percent passing a 75 mm (No. 200) sieve.

2.02 ASPHALT CONCRETE MIX

A. General:

1. Mix formula shall not be modified except with the written approval of City.

2. Source Changes:

a. Should material source(s) change, establish a new asphalt concrete mix formula before the new material(s) is used.

b. Perform check tests of properties of the plant-mix bituminous materials on the first day of production and as requested by City to confirm that properties are in compliance with design criteria.

c. Make adjustments in gradation or asphalt content as necessary to meet design criteria.

B. Asphalt Concrete: Type SP meeting the requirements of the Standard Specifications.

C. Composition: Hot-plant mix of aggregate, mineral filler, and paving grade asphalt cement. The several aggregate fractions shall be sized, uniformly graded, and combined in such proportions that the resulting mixture meets the grading requirements of the mix formula.

D. Aggregate:

1. The aggregate shall meet the requirements of the Standard Specifications.

2. Mineral Filler shall meet the requirements of the Standard Specifications

E. Asphalt Cement: Paving Grade AC-30 meeting the requirements of the Standard Specifications.

PART 3 – EXECUTION

3.01 GENERAL

A. Traffic Control: Minimize inconvenience to traffic but keep vehicles off freshly treated or paved surfaces to avoid pickup and tracking of asphalt.

B. Driveways: Repave driveways from which pavement was removed. Leave driveways in as good or better condition than before start of construction.

3.02 LINE AND GRADE

A. Provide and maintain intermediate control of line and grade, independent of the underlying base to meet finish surface grades and minimum thickness.

B. Shoulders: Construct to line, grade, and cross-section shown.

3.03 PREPARATION

A. Prepare subgrade as specified in the Contract Documents.

B. Existing Roadway:

1. Modify profile by grinding, milling, or overlay methods as approved, to provide meet lines and surfaces and to produce a smooth riding connection to existing facility.

2. Resurface entire roadway following adjustment of base and asphalt grades.

3. Paint edges of meet line with tack coat prior to placing new pavement.

C. Thoroughly coat edges of contact surfaces (curbs, manhole frames) with emulsified asphalt or asphalt cement prior to laying new pavement. Prevent staining of adjacent surfaces.

3.04 PAVEMENT APPLICATION

A. General: Place asphalt concrete mixture on an approved, prepared base in conformance with this Section.

B. Cold Milling

1. Milling of existing asphalt pavement shall be at the depth and location as indicated on the Construction Drawings or as directed by the City.

2. The milled surface shall be reasonably smooth and free of excessive scarification marks, gouges, ridges, continuous grooves, or other damage. The milled pavement surface shall be thoroughly cleaned of all loose aggregate particles, dust, and other objectionable material by the use of power brooms, power blowers, power vacuums or other means.

3. The Contractor shall coordinate the adjustment of maintenance access structures, meter boxes, drainage inlets, and valve boxes with the milling operation.

4. All milled material shall become the property of the Contractor and shall be disposed of off-site or used in conformance with the Contract Documents, or for utilization as Reclaimed Asphalt Pavement, in conformance with the specification provided above, as approved by the City.

C. Prime Coat:

1. Heat cut-back asphalt between 100 degrees F and 150 degrees F prior to application.

2. Apply uniformly to clean, dry surfaces. Avoiding overlapping of applications.

3. Do not apply when moisture content of upper 3 inches of base exceeds optimum moisture content of base, or if free moisture is present.

4. Application Rate: Minimum 0.1 gallons per square yard of surface area.

5. Remove or redistribute excess material.

6. Allow a minimum of 5 full days for curing of primed surface before placing asphalt concrete.

D. Tack Coat:

1. Apply uniformly to clean, dry surfaces. Avoiding overlapping of applications.

2. Do not apply more tack coat than necessary for the day's paving operation.

3. Touch up missed or lightly coated surfaces and remove excess material.

4. Application Rate:

a. Minimum 0.05 gallons to maximum 0.12 gallons of asphalt (residual if diluted emulsified asphalt) per square yard of surface area.

b. Apply at rate, within range specified, sufficient to assure good bonding, but not so heavy that surplus asphalt flushes into asphalt concrete being placed.

E. Pavement Mix:

1. Prior to Paving:

a. Sweep primed surface free of dirt, dust, or other foreign matter.

b. Patch holes in primed surface with asphalt concrete pavement mix.

c. Blot excess prime material with sand.

2. Place asphalt concrete pavement mix in lifts as shown.

3. Compacted Lift Thickness:

a. Minimum: Twice the maximum aggregate size, but in no case

less than 1 inch. Minimum thickness for Type SP-9.5 is 1.0 inches.

b. Maximum: 4 inches.

4. Total Compacted Thickness: Per Contract Documents.

5. Apply such that meet lines are straight and edges are vertical.

6. Collect and dispose of segregated aggregate from raking process. Do not scatter material over finished surface.

7. Joints:

a. Offset edge of each layer a minimum of 6 inches so joints are not directly over those in underlying layer.

b. Offset longitudinal joints in roadway pavements, so longitudinal joints in wearing layer coincide with pavement centerlines and lane divider lines.

c. Form transverse joints by cutting back on previous day's run to expose full vertical depth of layer.

8. Succeeding Lifts: Apply tack coat to pavement surface between each lift.

9. After placement of pavement, seal meet line by painting a minimum of 6 inches on each side of the joint with cut-back or emulsified asphalt. Cover immediately with sand.

F. Compaction:

1. Roll until roller marks are eliminated and compacted to 100 percent of the laboratory compacted mixture.

2. Joint Compaction:

a. Place top or wearing layer as continuously as possible.

b. Pass roller over unprotected end of freshly laid mixture only when placing of mix is discontinued long enough to permit mixture to become chilled.

c. Cut back previously compacted mixture when Work is resumed to produce a slightly beveled edge for full thickness of layer.

d. Cut away waste material and lay new mix against fresh cut.

G. Tolerances:

1. General: Conduct measurements for conformity with crown and grade immediately after initial compression. Correct variations immediately by removal or addition of materials and by continuous rolling.

2. Completed Surface or Wearing Layer Smoothness:

   a. Uniform texture, smooth, and uniform to crown and grade.

   b. Maximum Deviation: 1/8 inch from lower edge of a 12-foot straightedge, measured continuously parallel and at right angle to centerline.

   c. If surface of completed pavement deviates by more than twice the specified tolerances, remove and replace wearing surface.

3. Transverse Slope Maximum Deviation: ¼ inch in 12 feet from the rate of slope shown.

4. Finished Grade:

   a. Perform a field differential level survey on a maximum 50-foot grid and along all grade breaks.

   b. Maximum Deviation: 0.02 foot from the grade shown.

H. Seal Coat:

1. General: Apply seal coat of paving grade or emulsified asphalt to finished surface at longitudinal and transverse joints, joints at abutting pavements, areas where the asphalt concrete was placed by hand, patched surfaces, and other areas as directed by the City.

2. Preparation:

   a. Maintain surfaces that are to be sealed free of holes, dry, and clean of dust and loose material.

   b. Seal in dry weather and when the temperature is above 35 degrees F.

3. Application:

   a. Fill cracks over 1/16 inch in width with an asphalt-sand slurry or approved crack sealer prior to sealing.

   b. When sealing patched surfaces and joints with existing pavements, extend minimum 6 inches beyond edges of patches.

3.05 PAVEMENT OVERLAY

A. Preparation:

1. Remove fatty asphalt, grease drippings, dust, and other deleterious matter.

2. Surface Depressions: Fill with asphalt concrete mix, and thoroughly compact.

3. Damaged Areas: Remove broken or deteriorated asphalt concrete and patch as specified in Article Patching.

4. Portland Cement Concrete Joints: Remove joint filler to minimum 1/2 inch below surface.

B. Application:

1. Tack Coat: As specified in this Section.

2. Place and compact asphalt concrete as specified in Article Pavement Application.

3. Place first layer to include widening of pavement and leveling of irregularities in the surface of the existing pavement.

4. When leveling irregular surfaces and raising low areas, the actual compacted thickness of any one lift shall not exceed 2 inches.

5. The actual compacted thickness of intermittent areas of 120 square yards or less may exceed 2 inches, but not 4 inches.

6. Final wearing layer shall be of uniform thickness, and meet grade and cross-section as shown.

3.06 PATCHING HOT MIX ASPHALT

A. Preparation:

1. Remove damaged, broken, or unsound asphalt concrete adjacent to patches. Trim to straight lines exposing smooth, sound, vertical edges.

2. Prepare patch subgrade as specified in the Contract Documents.

B. Application:

1. Patch Thickness: 3 inches or thickness of adjacent asphalt concrete, whichever is greater.

2. Place asphalt concrete mix across full width of patch in layers of equal thickness.

3. Spread and grade asphalt concrete with hand tools or mechanical spreader, depending on size of area to be patched.

C. Compaction:

1. Roll patches with power rollers capable of providing compression of 200 to 300 pounds per linear inch. Use hand tampers where rolling is impractical.

2. Begin rolling top course at edges of patches, lapping adjacent asphalt surface at least 1/2 the roller width. Progress toward center of patch overlapping each preceding track by at least 1/2 the width of roller.

3. Make sufficient passes over entire area to remove roller marks and to produce desired finished surface.

D. Tolerances:

1. Finished surface shall be flush with and match grade, slope, and crown of adjacent surface.

2. Tolerance: Surface smoothness shall not deviate more than plus 1/4 inch or minus 0 when a straightedge is laid across patched area between edges of new pavement and surface of old surfacing.

3.07 FIELD QUALITY CONTROL

A. General: Provide services of an approved certified independent testing laboratory to conduct tests.

B. Field Density Tests:

1. Perform tests from cores or sawed samples.

2. Measure with properly operating and calibrated nuclear density gauge.

3. Maximum Density: In accordance with ASTM D2041, using a sample of mix taken prior to compaction from the same location as the density test sample.

C. Testing Frequency:

1. Quality Control Tests:

a. Asphalt Content, Aggregate Gradation: Once per every 500 tons of mix or once every 4 hours, whichever is greater.

b. Mix Design Properties, Measured Maximum (Rice's) Specific Gravity: Once every 1,000 tons or once every 8 hours, whichever is greater.

2. Density Tests: Once every 500 tons of mix or once every 4 hours, whichever is greater.

- END OF SECTION -

SECTION 02920

SODDING

PART 1 – GENERAL

1.01 DEFINITIONS

A. Maintenance Period: Begin maintenance immediately after each area is planted (sod) and continue for a period of 8 weeks after all planting under this Section is completed.

B. Satisfactory Stand:

1. Grass or section of grass that has:

a. No bare spots larger than 3 square feet.

b. Not more than 10 percent of total area with bare spots larger than 1 square foot.

c. Not more than 15 percent of total area with bare spots larger than 6 square inches.

1.02 DELIVERY, STORAGE, AND PROTECTION

A. Sod:

1. Do not harvest if sod is excessively dry or wet to the extent survival may be adversely affected.

2. Harvest and deliver sod only after laying bed is prepared for sodding.

3. Roll or stack to prevent yellowing.

4. Deliver and lay within 24 hours of harvesting.

5. Keep moist and covered to protect from drying from time of harvesting until laid.

1.03 WEATHER RESTRICTIONS

A. Perform Work under favorable weather and soil moisture conditions as determined by accepted local practice.

1.04 SEQUENCING AND SCHEDULING

A. Prepare topsoil as specified in the Contract Documents, before starting Work of this Section.

B. Complete Work under this section within ten (10) days following completion of soil preparation.

C. Notify City at least three (3) days in advance of:

1. Each material delivery.

2. Start of planting activity.

D. Planting Season: Those times of year that are normal for such Work as determined by accepted local practice. At a minimum, Contractor shall avoid planting in January or February.

1.05 MAINTENANCE SERVICE

A. Contractor: Perform maintenance operations during maintenance period to include:

1. Watering: Keep surface moist.

2. Washouts: Repair by filling with topsoil and replace sodded areas.

3. Mowing: Mow to 2 inches after grass height reaches 3 inches, and mow to maintain grass height from exceeding 3 1/2 inches.

4. Re-sod unsatisfactory areas or portions thereof immediately at the end of the maintenance period if a satisfactory stand has not been produced, at which time maintenance period shall recommence.

5. Re-sod during next planting season if scheduled end of maintenance period falls after September 15.

PART 2 – MATERIALS

2.01 FERTILIZER

A. Commercial, uniform in composition, free-flowing, suitable for application with equipment designed for that purpose. Minimum percentage of plant food by weight.

B. Mix:

1. Nitrogen: Sixteen.

2. Phosphoric Acid: Four.

3. Potash: Eight.

2.02 SOD

A. Unless a particular type of sod is called for, sod may be of either St. Augustine Floritam, Bahia grass or Seashore Paspalum, in accordance with the following:

1. Use Bahia grass where no irrigation system exists.

2. Use St. Augustine Floritam where an irrigation system is in place. If original sod being replaced is St. Augustine Floritam, replacement sod shall match.

3. Seashore Paspalum sod will be used in areas prone to salt water flooding.

B. Strongly rooted pads, capable of supporting own weight and retaining size and shape when suspended vertically from a firm grasp on upper 10 percent of pad.

1. Grass Height: Normal.

2. Strip Size: Supplier's standard, commercial size rectangles.

3. Soil Thickness: Uniform; 1-inch plus or minus 1/4-inch at time of cutting.

4. Age: Not less than 10 months or more than 30 months.

5. Condition: Healthy, green, moist; free of diseases, nematodes and insects, and of undesirable grassy and broadleaf weeds. Yellow sod, or broken pads, or torn or uneven ends will not be accepted

6. Any netting contained within the sod shall be certified by the manufacturer to be bio-degradable within a period of 3 months from installation.

PART 3 – EXECUTION

3.01 PREPARATION

A. Grade Areas to Smooth, Even Surface with Loose, Uniformly Fine Texture:

1. Roll and rake, remove ridges, fill depressions to meet finish grades.

2. Limit such Work to areas to be planted within immediate future.

3. Remove debris, foreign material and stones larger than 1 1/2 inches diameter, and other objects that may interfere with planting and maintenance operations.

B. Moisten prepared areas before planting if soil is dry. Water thoroughly and allow surface to dry off before seeding. Do not create muddy soil.

C. Restore prepared areas to specified condition if eroded or otherwise disturbed after preparation and before planting.

D. Limit preparation to those areas that can be sodded within 72 hours after preparation.

3.02 FERTILIZER

A. Apply evenly over area in accordance with manufacturer's instructions. Mix into top 2 inches of topsoil.

B. Application Rate: 20 pounds per 1,000 square feet (1,000 pounds per acre).

3.03 SODDING

A. Do not plant dormant sod, or when soil conditions are unsuitable for proper results.

B. Pre-wet the area prior to placing sod. Lay sod to form solid mass with tightly fitted joints; butt ends and sides, do not overlap:

1. Stagger strips to offset joints in adjacent courses.

2. Work from boards to avoid damage to subgrade or sod.

3. Tamp or roll lightly to ensure contact with subgrade; work sifted soil into minor cracks between pieces of sod, remove excess to avoid smothering adjacent grass.

4. Complete sod surface true to finished grade, even, and firm.

C. Fasten sod on slopes to prevent slippage with wooden pins 6 inches long driven through sod into subgrade, until flush with top of sod. Install at sufficiently close intervals to securely hold sod.

D. Water sod with fine spray immediately after planting. During first month, water daily or as required to maintain moist soil to depth of 4 inches.

3.04 FIELD QUALITY CONTROL

A. Eight weeks after sodding is complete and on written notice from Contractor, City will, within 15 days of receipt, determine if the sod has been satisfactorily established.

B. If the sod is not satisfactorily established, Contractor shall replace the sod and repeat the requirements of this Section.

- END OF SECTION -

SECTION 02930

LANDSCAPE WORK

PART 1 – GENERAL

1.01 DEFINITIONS

A. Measurement:

1. In size grading balled and burlapped (B & B), caliper takes precedence over height.

2. Take trunk caliper 6 inches above the ground level (up to and including 4-inch caliper size) and 12 inches above the ground level for larger trees.

3. Measure size of container-grown stock by height and width of plant.

4. Measure herbaceous perennials pot size, not top growth.

1.02 DELIVERY, STORAGE, AND HANDLING

A. Inspection and Transporting: Movement of nursery stock shall comply with all Federal, State, and local laws and regulations. Therefore, required inspection certificates shall accompany each shipment, and shall be submitted in accordance with Section 01300.

B. Cover plants during shipment with a tarpaulin or other suitable covering to minimize drying.

C. Balled and Burlapped Plants: Wrap each ball firmly with burlap and securely bind with twine, cord, or wire for shipment and handling. Drum-lace balls with a diameter of 30 inches or more. Wire wrap burlap if root ball is not sufficiently compacted. Palms will not require burlap wrapping if the following requirements are met:

1. Dug from marl or heavy soil that adheres to roots and retains shape without shattering.

2. Moistened material used to cover ball and roots not exposed to wind and sun.

3. Transport material on vehicles large enough to allow plants not to be crowded. Plants shall be covered to prevent wind damage during transit and shall be kept moist, fresh and protected at all times. Such protection shall encompass the entire period which the plants are in transit, being handled, or are in temporary storage.

D. All plant material shall not remain on the work site longer than two (2) days prior to being installed.

E. As specified herein for transplanting.

1.03 MAINTENANCE

A. Commence to maintain plant life immediately after planting and maintain for a minimum of one growing season, and until plants are well established and exhibit a vigorous growing condition.

B. In accordance with accepted submittal on care and maintenance of plants and as follows:

1. Maintain by watering, pruning, cultivating, and weeding as required for healthy growth. Restore planting saucers.

2. Tighten and repair stake and guy supports and reset trees and shrubs to proper grades or vertical position as required.

3. Restore or replace damaged wrappings. Spray as required to keep trees and shrubs free of insects and disease.

4. Remove guys, stakes, and other supports at end of maintenance service.

5. Maintenance includes temporary protection fences, barriers, and signs as required for protection.

6. Coordinate watering to provide deep root watering to newly installed trees.

1.04 SCHEDULING AND SEQUENCING

A. Plant Deliveries: Notify Engineer at least 3 days in advance of each delivery.

B. Planting Season: Conduct planting during times of year that are normal for such work as determined by accepted local practice.

C. Plant trees and shrubs after final grades are established and before planting of lawns or grasses.

PART 2 – MATERIALS

2.01 PLANT MATERIALS

A. Provide quantity, size, genus, species, and variety of trees and shrubs indicated; comply with applicable requirements of ANSI Z60.1.

B. Nomenclature (Names of Plants): In accordance with “Hortus Third”.

C. Quality and Size:

1. Nursery-grown, habit of growth normal for species.

2. Sound, healthy, vigorous, and free from insects, diseases, and injuries - Florida #1 quality or better.

3. Equal to or exceeding measurements specified in plant list. Measure plants before pruning with branches in normal position.

4. Root System of Container-Grown Plants: Well developed and well distributed throughout the container, such that the roots visibly extend to the inside face of the growing container.

5. Perform necessary pruning at time of planting.

6. Sizes: Dimensional relationship requirements of ANSI Z60.1 for kind and type of plants required.

7. Balled and Burlapped Plants: Firm, intact ball of earth encompassing enough of the fibrous and feeding root system to enable full plant recovery.

    a. Ball Size: ANSI Z60.1.

8. Container-Grown Plants: Self-established root systems, sufficient to hold earth together after removal from container, without being rootbound.

    a. Stock: Grown in delivery containers for at least 6 months, but not over 2 years.

9. Label each tree and shrub of each variety with securely attached waterproof tag, bearing legible designation of botanical and common name.

10. All trees must have a fully developed fibrous root system, be heavily branched, or in palms, heavily leafed, free from all insects, fungus, and other diseases.

11. Palms: Wrap the roots of all plants of the palm species before transporting, except if they are container grown plants and ensure that they have an adequate root ball structure, and mass for healthy transplantation as defined in “Florida Grades and Standards for Nursery Plants.”

12. Burlapping is not required if the palm is carefully dug from marl or heavy soil that adheres to the roots and retains its shape without crumbling. During transporting and after arrival, carefully protect root balls of palms from wind and exposure to the sun. Muck grown palms are not allowed. After delivery to the job site, if not planting the palm within 24 hours, cover the root ball with a moist material. Plant all palms within 48 hours of delivery to the site.

13. Move sabal and coconut palms in accordance with the “Florida Grades and Standards for Nursery Plants.”

D. Replacement Shrubs and Trees: Same species, size, and quality as specified for plant being replaced, except existing trees larger than 4-inch caliper, may be replaced with 4-inch caliper trees to satisfy the caliper inches lost.

2.02 ANTIDESICCANT

A. Provide transpiration retarding material to be used where any plant material is moved during the growing season.

2.03 GUYING, STAKING, AND WRAPPING MATERIALS

A. Wood Stake: 2 inches by 2 inches by 8 feet.

B. Guy Wires: Galvanized, 12-gauge, ductile steel.

C. Flags:

1. Wood: 1/2-inch by 3 inches by 12 inches, with 3/8-inch hole centered 1-1/2 inches from each end, painted white.

2. Sheet Metal: 1-1/2-inch with clipped corners and both ends punched, painted white.

D. Hose: Two-ply, reinforced rubber garden hose, not less than 1/2-inch diameter, new or used.

E. Burlap: Of first quality, minimum 8 ounces in weight, not less than 6 inches nor more than 10 inches in width.

2.04 MULCH

A. Mulch shall be free from noxious weed seed and foreign material harmful to plant growth and shall be an approved non-native tree bark mulch. It must be uniformly shredded and be free from large pieces of bark, foreign matter, weed seeds and any other organic or inorganic material.

B. Barkdust: Medium grind, pine; maximum 3/4-inch particle size.

2.05 PLANTING SOIL MIX

A. Proportion by Weight: 75% approved good quality top soil mixed with 25% approved organic matter as approved by Engineer. The soil must be taken from ground that has never been stripped, with a slight acid reaction (5.5 to 6.5 ph) and without an excess of calcium or carbonate. Soil shall have a loose friable condition.

B. Special Type: Planting soil for palms shall be a good grade of salt free sand, which is free of all weeds.

2.06 TOPSOIL

A. General: Uniform mixture of 75 percent good grade of clean, salt free, weed free sand and 25 percent organic material in a loose friable condition, free from objects larger than 1-1/2 inches maximum dimension, and free of subsoil, roots, grass, other foreign matter, hazardous or toxic substances, and deleterious material that may be harmful to plant growth or may hinder grading, planting, or maintenance.

B. Textural Amendments: Amend as necessary to conform to required composition.

C. Source: Import topsoil if onsite material fails to meet specified requirements or is insufficient in quantity.

D. 95% of topsoil shall pass a ¼ inch sieve.

E. Organic matter content shall be 4% to 12% of total dry weight.

2.07 SOURCE QUALITY CONTROL

A. Topsoil Analysis/Testing: Performed by county or state soil testing service or approved certified independent testing laboratory.

B. Should soil tests prove the topsoil to alkaline or above the accepted minimum for salt content, the topsoil shall be removed and replaced by acceptable material at Contractor's expense.

PART 3 – EXECUTION

3.01 TRANSPLANTING

A. Remove existing plantings identified for transplant prior to beginning Work in area in accordance with standard nursery practices and as specified herein.

B. Nondormant Plants: Prior to digging, spray foliage with antidesiccant, as recommended by manufacturer.

C. Cover balls and containers of plants that cannot be planted immediately, with moist soil or mulch.

D. Water plants as often as necessary to prevent drying until planted.

E. Do not remove container-grown stock from containers before time of planting.

F. Bare-Root Plants:

1. Dig up with least possible injury to fibrous root system.

2. Immediately upon removal from ground, cover roots with thick coating of mud or wrap in wet straw, moss, or other suitable packing material for protection from drying until planted.

3. Plant or heel-in immediately upon relocation to temporary storage. Open and separate bundles of bare-root plants, and eliminate air pockets among roots as they are covered.

G. Replant each temporarily removed tree, shrub, or other plant only after construction activities are completed and applicable grading and topsoil replacement is completed in its vicinity. Replant trees, shrubs, and other plants in their original positions unless otherwise shown or approved. Plant as specified for new plants.

H. Maintain transplanted materials in same manner as new trees and shrubs.

3.02 LOCATION OF PLANTS

A. Locate new planting or stake positions as shown unless obstructions are encountered, in which case notify Engineer.

B. Locate no planting, except ground cover, closer than 18 inches to pavements, pedestrian pathways, and structures.

C. Request Engineer observe locations, and adjust as necessary before planting begins.

3.03 PREPARATION

A. Subsoil Drainage: Furnish for plant pits and beds.

B. Planting Soil: Delay mixing of amendments and fertilizer if planting will not follow preparation of planting soil within 2 days. For pit and trench type backfill, mix planting soil prior to backfilling and stockpile at site.

C. Plants: Place on undisturbed existing soil or well-compacted backfill.

D. Trees and Shrubs:

1. Pits, Beds, and Trenches: Excavate with vertical and scarified sides.

2. B & B Trees and Shrubs: Make excavations at least twice as wide as root ball.

3. Container-Grown Stock: Excavate as specified for B & B stock, adjust for size of container width and depth.

4. Bare-Root Trees: Excavate pits to a width to just accommodate roots fully extended and depth to allow uppermost roots to be below original grade.

5. Fill excavations with water and allow to percolate out prior to planting.

E. Ground Cover Beds:

1. Mix amendments and fertilizer with top soil prior to placing or apply on surface of top soil and mix thoroughly before planting.

2. Scarify top soil to a depth of 4 to 6 inches.

3. Establish finish grading of soil. Rake areas to smooth and create uniform texture and fill depressions.

4. Moisten.

3.04 PLANTING

A. Plant trees before planting surrounding smaller shrubs and ground covers. Adjust plants with most desirable side facing toward the prominent view (sidewalk, building, street).

B. B & B Plants: Place in pit by lifting and carrying by its ball (do not lift by branches or trunk). Lower into pit. Set straight and in pit center with tip of rootball 1 to 2 inches above adjacent finish grade.

C. Bare-Root Plants: Spread roots and set stock on cushion of planting soil mixture. Set straight in the pit center so that roots, when fully extended, will not touch walls of the planting pit and the uppermost root is just below finish grade. Cover roots of bare-root plants to the crown.

D. Container-Grown Plants: Remove containers, slash edges of rootballs from top to bottom at least 1-inch deep. Plant as for B & B plants.

E. Ground Covers: Dig planting holes through mulch with one of the following: hand trowel, shovel, bulb planter, or hoe. Split biodegradable pots or remove nonbiodegradable pots. Root systems of all potted plants shall be split or crumbled. Plant so roots are surrounded by soil below the mulch. Set potted plants so pot top is even with existing grade.

3.05 BACKFILLING

A. Backfill with planting soil, except where existing soil is suitable according to top soil analysis.

B. B & B Plants:

1. Partially backfill pit to support plant. Remove burlap and binding from sides and tops of B & B plants, do not pull burlap from under balls.

2. When excavation is approximately 2/3 full, water thoroughly before placing remainder of backfill to eliminate air pockets even if it is raining. Finish backfilling pit sides.

3. Never cover top of rootball with soil. Form a saucer above existing grade, completely around the outer rim of the plant pit.

C. Bare-Root Plants:

1. Plumb before backfilling and maintain plumb while working backfill around roots and placing layers above roots.

2. Set original soil line of plant 1-inch to 2 inches above adjacent finish landscape grades. Spread out roots without tangling or turning up to surface. Cut injured roots cleanly; do not break.

3. Carefully work backfill around roots by hand; puddle with water until backfill layers are completely saturated.

3.06 GUYING AND STAKING

A. Support trees immediately after planting to maintain plumb position.

B. Guying: Support all trees over 4 inches in caliper with 3 guys equally.

C. Special Requirements for Palm Trees: Brace palms which are to be staked with three 2-inch by 4-inch wood braces, toe-nailed to cleats which are securely banded at two points to the palm, at a point one third the height of the trunk. Pad the trunk with five layers of burlap under the cleats. Place braces approximately 120 degrees apart and secure them underground by 2- by 4- by 12-inch stake pads.

3.07 SUBGRADE PREPARATION

A. The subgrade shall be 4 inches lower than finished grade with 2 inches of topsoil added to sod areas.

B. Scarify subgrade to minimum depth of 6 inches where topsoil is to be placed.

C. Remove stones over 2-1/2 inches in any dimension, sticks, roots, rubbish, and other extraneous material.

D. Limit preparation to areas which will receive topsoil within 2 days after preparation.

3.08 TOPSOIL PLACEMENT

A. Topsoil Thickness:

1. Sodded Areas: 2 inches.

2. Planting Beds: 6 inches.

3. Planting Beds in Roadways and Parking Lots: All planting areas shall be excavated to a minimum depth of 24” or greater as needed to remove all road base/rock down to native soil prior to backfilling with approved planting soil.

B. Do not place topsoil when subsoil or topsoil is excessively wet or otherwise detrimental to the Work.

C. Mix soil amendments with topsoil before placement or spread on topsoil surface and mix thoroughly into entire depth of topsoil before planting or seeding.

D. Uniformly distribute to within 1/2-inch of final grades. Fine grade topsoil eliminating rough or low areas and maintaining levels, profiles, and contours of subgrade.

E. Remove stones exceeding 1-1/2 inches, roots, sticks, debris, and foreign matter during and after topsoil placement.

F. Remove surplus subsoil and topsoil from site. Grade stockpile area as necessary and place in condition acceptable for planting or seeding.

3.09 MULCHING

A. Cover planting beds and area of saucer around each plant with 3-inch thick layer of mulch within 2 days after planting. Saturate planting area with water.

3.10 PRUNING AND REPAIR

A. Prune only after planting and in accordance with standard horticultural practice to preserve natural character of the plant. Perform in presence of Engineer or City's representative. Remove all dead wood, suckers, and broken or badly bruised branches. Use only clean, sharp tools. Do not cut lead shoot.

B. For Existing Trees Impacted by Construction Activities:

1. Maintain a minimum 6-foot clearance from the trunk of all trees except palm trees. Existing trees to remain shall be protected during all construction phases. Protective barriers shall be provided at the drip line of existing trees adjacent to construction operations. Replacement of any trees that are damaged or destroyed due to the Contractor's operations shall be the Contractor's responsibility and shall be replaced at the Contractor's expense

2. Where roots of trees are encountered in the excavation area, use a 24-inch deep saw cut prior to excavation. Roots shall not be torn by excavating equipment. Hand dig around roots. Cut roots do not require coating.

3. Overhead branches not trimmed prior to construction and interfering with construction activities will be pruned and cut as approved by the City Forester and not torn or broken off with excavating equipment.

3.11 WEED CONTROL

A. Maintain a weed-free condition within planting areas. Apply pre-emergent selective herbicide to mulched beds at manufacturer's recommended rate of application.

3.12 PROTECTION OF INSTALLED WORK

A. Protect planting areas and plants against damage for duration of maintenance period.

3.13 ROOT BARRIERS

A. Root barriers shall be installed parallel to all trees (except palms) when there is a sidewalks, roadway or utility adjacent to the planting area. Root barriers will be installed as directed by Engineer.

- END OF SECTION -

DIVISION 3 – CONCRETE

SECTION 03100

CONCRETE FORMWORK

PART 1 – GENERAL

1.01 THE REQUIREMENT

A. The Contractor shall design and furnish all materials for concrete formwork, bracing, and supports and shall design and construct all falsework, all in accordance with the provisions of the Contract Documents.

1.02 RESPONSIBILITY

A. The design and engineering of the formwork as well as safety considerations are the responsibility of the Contractor.

1.03 RELATED WORK SPECIFIED ELSEWHERE

A. Section 01300 - Submittals

B. Section 03200 - Concrete Reinforcement

C. Section 03300 - Cast in Place Concrete

D. Section 03315 - Grout

1.04 REFERENCE SPECIFICATIONS, CODES, AND STANDARDS

A. Without limiting the generality of other requirements of these Specifications, all work specified herein shall conform to or exceed the requirements of the Building Code and the applicable requirements of the following documents to the extent that the provisions of such documents are not in conflict with the requirements of this Section.

1. Codes and Standards

    a. The Building Code, as referenced herein, is the Florida Building Code (FBC).

2. Government Standards

    a. PS 1U.S. Product Standard for Concrete Forms, Class I.

3. Commercial Standards

    a. ACI 347 Recommended Practice for Concrete Formwork.

    b. ACI 318R Building Code Requirements for Reinforced Concrete.

    c. ACI 350Code Requirements for Environmental Engineering Concrete Structures

1.05 QUALITY ASSURANCE

A. The variation from established grade or lines shall not exceed 1/4 inch in 10 feet and there shall be no offsets or visible bulges or waviness in the finished surface. All tolerances shall be within the "Suggested Tolerances" specified in ACI 347. The Contractor shall grind smooth all fins and projections between formwork panels as directed by the Engineer.

B. Curved forms shall be used for curved and circular structures that are cast-in-place. Straight panels will not be acceptable for forming curved structures.

PART 2 – PRODUCTS

2.01 FORM MATERIALS

A. Except as otherwise expressly accepted by the Engineer, all lumber brought on the job site for use as forms, shoring, or bracing shall be new material. All forms shall be smooth surface forms and shall be of the following materials:

1.	Footing sides	-	Construction grade Hem Fir or Douglas Fir
2.	Walls	-	Steel or plywood panel
3.	Columns	-	Steel, plywood or fiber glass
4.	Roof and floor Slabs	-	Plywood
5.	All other work	-	Steel panels, plywood or tongue and groove lumber

B. Materials for concrete forms, formwork, and falsework shall conform to the following requirements:

1. Lumber shall be Southern Pine, construction grade or better, in conformance with U.S. Product Standard PS20.

2. Plywood for concrete formwork shall be new, waterproof, synthetic resin bonded, exterior type Douglas Fir or Southern Pine plywood manufactured especially for concrete formwork and shall conform to the requirements of PS I for Concrete Forms, Class I, and shall be edge sealed. Thickness shall be as required to support concrete at the rate it is placed, but not less than 5/8 inch thick.

2.02 PREFABRICATED FORMS

A. Form materials shall be metal, wood, plywood, or other acceptable material that will not adversely affect the concrete and will facilitate placement of concrete to the shape, form, line, and grade indicated. Metal forms shall be an acceptable type that will accomplish such results. Wood forms for surfaces to be painted shall be Medium Density Overlaid plywood, MDO Ext. Grade.

2.03 FORMWORK ACCESSORIES

A. Exterior corners in concrete members shall be provided with 3/4 inch chamfers. Re entrant corners in concrete members shall not have fillets unless otherwise shown.

B. Form ties shall be provided with a plastic cone or other suitable means for forming a conical hole to insure that the form tie may be broken off back of the face of the concrete. The maximum diameter of removable cones for rod ties, or of other removable form tie fasteners having a circular cross section, shall not exceed 1 1/2 inches; and all such fasteners shall be such as to leave holes of regular shape for reaming.

C. Form ties for water-retaining structures shall have integral waterstops. Removable taper ties may be used when acceptable to the Engineer. At locations where removable taper ties are acceptable, a preformed mechanical EPDM rubber plug shall be used to seal the hole left after the removal of the taper tie. Plug shall be X-Plug by the Greenstreak Group, Inc., or approved equal. Friction fit plugs shall not be used.

D. Form release agent shall be a blend of natural and synthetic chemicals that employs a chemical reaction to provide quick, easy and clean release of concrete from forms. It shall not stain the concrete and shall leave the concrete with a paintable surface. Formulation of the form release agent shall be such that it would minimize formation of "Bug Holes" in cast-in-place concrete.

PART 3 – EXECUTION

3.01 EXAMINATION

A. Forms to confine the concrete and shape it to the required lines shall be used wherever necessary. The Contractor shall assume full responsibility for the adequate design of all forms, and any forms which are unsafe or inadequate in any respect shall promptly be removed from the Work and replaced at the Contractor's expense. A sufficient number of forms of each kind shall be provided to permit the required rate of progress to be maintained. The design and inspection of concrete forms and falsework, shall comply with applicable local, state and Federal regulations. Plumb and string lines shall be installed before concrete placement and shall be maintained during placement. Such lines shall be used by Contractor's personnel and by the Engineer and shall be in sufficient number and properly installed. During concrete placement, the Contractor shall continually monitor plumb and string line form positions and immediately correct deficiencies.

B. Concrete forms shall conform to the shape, lines, and dimensions of members as called for on the Drawings, and shall be substantially, free from surface defects, and sufficiently tight to prevent leakage. Forms shall be properly braced or tied together to maintain their position and shape under a load of freshly placed concrete.

C. All forms shall be true in every respect to the required shape and size, shall conform to the established alignment and grade, and shall be of sufficient strength and rigidity to maintain their position and shape under the loads and operations incident to placing and vibrating the concrete. Suitable and effective means shall be provided on all forms for holding adjacent edges and ends of panels and sections tightly together and in accurate alignment so as to prevent the formation of ridges, fins, offsets, or similar surface defects in the finished concrete. Plywood, 5/8 inch and greater in thickness, may be fastened

directly to studding if the studs are spaced close enough to prevent visible deflection marks in the concrete. The forms shall be tight so as to prevent the loss of water, cement and fines during placing and vibrating of the concrete. Specifically, the bottom of wall forms that rest on concrete footings or slabs shall be provided with a gasket to prevent loss of fines and paste during placement and vibration of concrete. Such gasket may be a 1 to 1 1/2-inch diameter polyethylene rod held in position to the underside of the wall form. Adequate clean out holes shall be provided at the bottom of each lift of forms. The size, number, and location of such clean outs shall be as acceptable to the Engineer.

D. Concrete construction joints will not be permitted at locations other than those shown or specified, except as may be acceptable to the Engineer. When a second lift is placed on hardened concrete, special precautions shall be taken in the way of the number, location, and tightening of ties at the top of the old lift and bottom of the new to prevent any unsatisfactory affect whatsoever on the concrete. Pipe stubs and anchor bolts shall be set in the forms where required.

3.02 EARTH FORMS

A. All vertical surfaces of concrete members shall be formed, except where placement of the concrete against the ground is called for on the Drawings. Not less than 1 inch of concrete shall be added to the thickness of the concrete member as shown where concrete is permitted to be placed against trimmed ground in lieu of forms. Such permission will be granted only for members of comparatively limited height and where the character of the ground is such that it can be trimmed to the required lines and will stand securely without caving or sloughing until the concrete has been placed.

3.03 FOOTINGS, SLAB EDGES AND GRADE BEAMS

A. Provide wood side forms for all footings, slab edges and grade beams.

3.04 APPLICATION - FORM RELEASE AGENT

A. Apply form release agent on formwork in accordance with manufacturer's recommendations.

3.05 INSERTS, EMBEDDED PARTS AND OPENINGS

A. Embedded Form Ties: Holes left by the removal of form tie cones shall be reamed with suitable toothed reamers so as to leave the surface of the holes clean and rough before being filled with mortar as specified for in Section 03350 entitled "Concrete Finishes". Wire ties for holding forms will not be permitted. No form tying device or part thereof, other than metal, shall be left embedded in the concrete. Ties shall not be removed in such manner as to leave a hole extending through the interior of the concrete members. The use of snap ties which cause spalling of the concrete upon form stripping or tie removal will not be permitted. If steel panel forms are used, rubber grommets shall be provided where the ties pass through the form in order to prevent loss of cement paste. Where metal rods extending through the concrete are used to support or to strengthen forms, the rods shall remain embedded and shall terminate not less than 1 inch back from the formed face or faces of the concrete.

3.06 FORM CLEANING

A. Forms may be reused only if in good condition and only if acceptable to the Engineer. Light sanding between uses will be required wherever necessary to obtain uniform surface texture on all exposed concrete surfaces. Exposed concrete surfaces are defined as surfaces which are permanently exposed to view. Unused tie rod holes in forms shall be covered with metal caps or shall be filled by other methods acceptable to the Engineer.

3.07 FORMWORK TOLERANCES

A. Formwork shall be constructed to insure that finished concrete surfaces will be in accordance with the tolerances listed in ACI 347.

1. The following construction tolerances are hereby established and apply to finished walls and slab unless otherwise shown in the Drawings:

Item	Tolerance
Variation of the constructed linear outline from the established position in plan	In 10 feet: 1/4 inch; In 20 feet or more: 1/2 inch
Variation from the level or from the grades shown on the Drawings	In 10 feet: 1/4 inch; In 20 feet or more: 1/2 inch
Variation from the plum	In 10 feet: 1/4 inch; In 20 feet or more: 1/2 inch
Variation in the thickness of slabs and walls	Minus 1/4 inch; Plus 1/2 inch
Variation in the locations and sizes of slab and wall openings	Plus or minus 1/4 inch

3.08 FORM REMOVAL

A. Remove top forms on sloping surfaces of concrete as soon as removal operations will not allow the concrete to sag. Perform any needed repairs or treatments required on sloping surfaces at once, and follow immediately with the specified curing.

B. The Contractor shall be responsible for the removal of forms and shores. Forms or shores shall not be removed before test cylinders have reached the specified minimum 28 day compressive strength for the class of concrete specified in Section 03300 entitled "Cast-in-Place Concrete", nor sooner than listed below:

1. Grade beam side forms ..... 3 days

2. Wall forms ..... 3 days

3. Column forms ..... 3 days

4. Beam and girder side forms ..... 3 days

5. Beam bottoms and slab forms/shores ..... 14 days

3.09 MAINTENANCE OF FORMS

A. Forms shall be maintained at all times in good condition, particularly as to size, shape, strength, rigidity, tightness, and smoothness of surface. Forms, when in place, shall conform to the established alignment and grades. Before concrete is placed, the forms shall be thoroughly cleaned. The form surfaces shall be treated with a nonstaining mineral oil or other lubricant acceptable to the Engineer. Any excess lubricant shall be satisfactorily removed before placing the concrete. Where field oiling of forms is required, the Contractor shall perform the oiling at least two weeks in advance of their use. Care shall be exercised to keep oil off the surfaces of steel reinforcement and other metal items to be embedded in concrete.

- END OF SECTION -

SECTION 03200

CONCRETE REINFORCEMENT

PART 1 – GENERAL

1.01 THE REQUIREMENT

A. The Contractor shall furnish, fabricate and place all concrete reinforcing steel, welded wire fabric, couplers, and concrete inserts for use in reinforced concrete and shall perform all appurtenant work, including all the wires, clips, supports, chairs, spacers, and other accessories and special work necessary to hold the reinforcing steel in place and protect it from injury and corrosion, all in accordance with the Contract Documents.

1.02 RELATED WORK SPECIFIED ELSEWHERE

A. Section 01300 - Submittals

B. Section 03100 - Concrete Formwork

C. Section 03300 - Cast in Place Concrete

D. Section 03315 - Grout

1.03 REFERENCE SPECIFICATIONS, CODES, AND STANDARDS

A. Without limiting the generality of other requirements of these specifications, all Work specified herein shall conform to or exceed the requirements of the Building Code and the applicable requirements of the following documents to the extent that the provisions of such documents are not in conflict with the requirements of this Section.

1. Codes and Standards

   a. The Building Code, as referenced herein, is the Florida Building Code (FBC).

2. Commercial Standards

   a. ACI 315 — Details and Detailing of Concrete Reinforcement.

   b. CRSI — Concrete Reinforcing Steel Institute Manual of Standard Practice

   c. ACI SP66 — ACI Detailing Manual

   d. ACI 305 — Hot Weather Concreting

   e. ACI 318 — Building Code Requirements for Reinforced Concrete.

   f. ACI 350 — Code Requirements for Environmental Engineering Concrete Structures

g. WRI Manual of Standard Practice for Welded Wire Fabric.

h. ASTM A 1064 Specification for Steel Wire and Welded Wire Reinforcement, Plain and Deformed, for Concrete.

i. ASTM A 615 Specification for Deformed and Plain Billet Steel Bars for Concrete Reinforcement.

1.04 SUBMITTALS

A. The Contractor shall furnish shop bending diagrams, placing lists, and Drawings of all reinforcing steel prior to fabrication in accordance with the requirements of the Section 01300 entitled, "Submittals." The Contractor shall submit detailed placing and shop fabricating drawings, prepared in accordance with ACI 315 and ACI Detailing Manual - (SP66) for all reinforcing steel. These drawings shall be made to such a scale as to clearly show joint locations, openings, the arrangement, spacing and splicing of the bars. Where opening sizes are dependent on equipment selection the Contractor shall indicate all necessary dimensions to define steel lengths and placing details.

B. Details of the concrete reinforcing steel and concrete inserts shall be submitted by the Contractor at the earliest possible date after receipt by the Contractor of the Notice to Proceed. Said details of reinforcing steel for fabrication and erection shall conform to ACI 315 and the requirements specified and shown. The shop bending diagrams shall show the actual lengths of bars, to the nearest inch measured to the intersection of the extensions (tangents for bars of circular cross section) of the outside surface. The shop Drawings shall include bar placement diagrams which clearly indicate the dimensions of each bar splice.

C. Where mechanical couplers are shown on the Drawings to be used to splice reinforcing steel, the Contractor shall submit manufacturer's literature which contains instructions and recommendations for installation for each type of coupler used; certified test reports which verify the load capacity of each type and size of coupler used; and shop Drawings which show the location of each coupler with details of how they are to be installed in the formwork.

D. Requests to relocate any bars that cause interferences or that cause placing tolerances to be violated.

E. Proposed supports for each type of reinforcing.

F. Certification that all installers of dowel adhesives are certified as Adhesive Anchor Installers in accordance with the ACI-CRSI Anchor Installer Certification Program.

G. International Code Council-Evaluation Services Evaluation Services Report (ICC-ES ESR) for dowel adhesives.

H. Adhesive dowel testing plan.

1.05 QUALITY ASSURANCE

A. Installer Qualifications for Drilled-In Rebar: Drilled-in rebar shall be installed by an Installer with at least three years of experience performing similar installations. Installer shall be

certified as an Adhesive Anchor Installer in accordance with ACI-CRSI Adhesive Anchor Installation Certification Program.

B. Installer Training: Conduct a thorough training with the manufacturer or the manufacturer's representative for the Installer on the project. Training shall consist of a review of the complete installation process for drilled-in anchors, to include but not be limited to the following:

1. Hole drilling procedure.

2. Hole preparation and cleaning technique.

3. Adhesive injection technique and dispenser training/maintenance.

4. Rebar doweling preparation and installation.

5. Proof loading/torquing.

C. Inspections of the adhesive dowel system may be made by the Engineer or other representatives of the City in accordance with the requirements of the ESR published by the manufacturer. Provide adequate time and access for inspection of products and anchor holes prior to injection, installation, and proof testing.

PART 2 – PRODUCTS

2.01 REINFORCEMENT

A. All reinforcing steel for all reinforced concrete construction shall conform to the following requirements:

1. Bar reinforcement shall conform to the requirements of ASTM A 615 for Grade 60 Billet Steel Reinforcement, and shall be manufactured in the United States. All reinforcing steel shall have the manufacturer's mill marking rolled into the bar which shall indicate the producer, size, type and grade. All reinforcing bars shall be deformed bars. Smooth reinforcing bars shall not be used unless specifically called for on the Drawings.

2. Welded wire fabric reinforcement shall conform to the requirements of ASTM A 1064 and the details shown on the Drawings; provided, that welded wire fabric with longitudinal wire of W9.5 size wire shall be either furnished in flat sheets or in rolls with a core diameter of not less than 10 inches; and provided further, that welded wire fabric with longitudinal wires larger than W9.5 size shall be furnished in flat sheets only. All welded wire fabric reinforcement shall be galvanized.

B. Field welding of reinforcing steel will not be allowed.

C. Use of coiled reinforcing steel will not be allowed.

2.02 ACCESSORY MATERIALS

A. Bolsters, chairs, spacers and other devices for supporting and fastening reinforcing in place shall be plastic protected wire bars supports complying with CRSI recommendations conforming to Class 1 bar supports.

B. Metal bar supports for reinforcing steel for wastewater structures shall be Class 2, Type B stainless steel protected bar supports (CRSI).

C. Tie Wire: Galvanized 16 gauge annealed type.

D. Concrete blocks (dobies), used to support and position reinforcing steel, shall have the same or higher compressive strength as specified for the concrete in which it is located. Concrete blocks shall only be used bottom mat of reinforcing steel for slabs on grade.

2.03 MECHANICAL COUPLERS

A. Mechanical couplers shall develop a tensile strength which exceeds 100 percent of the ultimate tensile strength and 125 percent of the yield strength of the reinforcing bars being spliced. The reinforcing steel and coupler used shall be compatible for obtaining the required strength of the connection.

B. Where the type of coupler used is composed of more than one component, all components required for a complete splice shall be supplied.

C. Hot forged sleeve type couplers shall not be used. Acceptable mechanical couplers are Dayton Superior Dowel Bar Splicer System by Dayton Superior, Dayton, Ohio, or approved equal. Mechanical couplers shall only be used where shown on the Drawings or where specifically approved by the Engineer.

D. Where the threaded rebar to be inserted into the coupler reduces the diameter of the bar, the threaded rebar piece shall be provided by the coupler manufacturer.

2.04 DOWEL ADHESIVE SYSTEM

A. Where shown on the Drawings, reinforcing bars anchored into hardened concrete with a dowel adhesive system shall use a two-component adhesive mix which shall be injected with a static mixing nozzle following manufacturer's instructions.

B. All holes shall be drilled with a carbide bit unless otherwise recommended by the manufacturer. If coring holes is allowed by the manufacturer and approved by the Engineer, cored holes shall be roughened in accordance with manufacturer requirements.

C. Thoroughly clean drill holes of all debris, drill dust, and water in accordance with manufacturer’s instructions with compressed air and a wire brush prior to installation of adhesive and reinforcing bar.

D. Degree of hole dampness shall be in strict accordance with manufacturer recommendations. Installation conditions shall be either dry or water-saturated. Water filled or submerged holes shall not be permitted unless specifically approved by the Engineer.

E. Injection of adhesive into the hole shall be performed in a manner to minimize the formation of air pockets in accordance with the manufacturer's instructions.

F. Embedment Depth:

1. The embedment depth of the bar shall be as show on the Drawings. Although all manufacturers listed below are permitted, the embedment depth shown on the Drawings is based on "SET-XP" by Simpson Strong-Tie Co. If the Contractor submits one of the other named dowel adhesives from the list below, the Engineer shall evaluate the required embedment and the Contractor shall provide the required embedment depth stipulated by the Engineer specific to the approved dowel adhesive.

2. Where the embedment depth is not shown on the Drawings, the embedment depth shall be determined to provide the minimum allowable bond strength equal to the tensile strength of the rebar according to the manufacturer's ICC-ES ESR.

3. The embedment depth shall be determined using the actual concrete compressive strength, a cracked concrete state, maximum long term temperature of 110 degrees F, and maximum short term temperature of 140 degrees F. In no case shall the embedment depth be less than the minimum, or more than the maximum, embedment depths stated in the manufacturer's ICC-ES ESR.

G. Engineer's approval is required for use of this system in locations other than those shown on the Drawings.

H. The adhesive system shall be IBC compliant for use in both cracked and uncracked concrete, must comply with the latest revision of ICC-ES Acceptance Criteria AC308, and shall have a valid ICC-ES report. The adhesive system shall be "Epcon System C6+ Adhesive Anchoring System" as manufactured by ITW Redhead, " HIT-HY 200 Injection Adhesive Anchor System" as manufactured by Hilti, Inc. "SET-XP" as manufactured by Simpson Strong-Tie Co. or "Pure 110+ Epoxy Adhesive Anchor System" by Powers Fasteners. Fast-set epoxy formulations shall not be acceptable.

I. All individuals installing dowel adhesive system shall be certified as an Adhesive Anchor Installer in accordance with the ACI-CRSI Anchor Installation Certification Program.

2.05 FABRICATION

A. Reinforcing steel shall be accurately formed to the dimensions and shapes shown on the Drawings, and the fabricating details shall be prepared in accordance with ACI 315 and ACII 318, except as modified by the Drawings. Stirrups and tie bars shall be bent around a pin having a diameter not less than 1 1/2 inch for No. 3 bars, 2 inch for No. 4 bars, and 2 1/2 inch for No. 5 bars. Bends for other bars shall be made around a pin having a diameter not less than 6 times the minimum thickness, except for bars larger than 1 inch, in which case the bends shall be made around a pin of 8 bar diameters. Bars shall be bent cold.

B. The Contractor shall fabricate reinforcing bars for structures in accordance with bending diagrams, placing lists, and placing Drawings. Said Drawings, diagrams, and lists shall be prepared by the Contractor as specified under Section entitled "Submittals," herein.

C. Fabricating Tolerances: Bars used for concrete reinforcing shall meet the following requirements for fabricating tolerances:

1. Sheared length: + 1 inch

2. Depth of truss bars: + 0, 1/2 inch

3. Stirrups and ties: + 1/2 inch

4. All other bends: + 1 inch

2.06 MINIMUM REINFORCEMENT

A. Unless otherwise shown on the Drawings or in the absence of the steel being shown, the minimum cross sectional area of reinforcing steel in the direction of principal reinforcement shall be 0.0033 times the gross concrete area of all concrete members.

B. Unless otherwise shown on the Drawings or in the absence of the steel being shown, the minimum cross sectional area of temperature reinforcing steel (reinforcing steel perpendicular to the principal reinforcing steel) shall be as follows:

1. 0.0020 times the gross concrete area in slabs of non-water-bearing structures.

2. 0.0015 times the gross concrete area vertically in walls of non-water-bearing structures.

3. 0.0025 times the gross concrete area horizontally in walls of non-water-bearing structures.

4. 0.0050 times the gross concrete area in slabs of water-bearing structures

5. 0.0030 times the gross concrete area vertically in walls of water-bearing structures.

6. 0.0050 times the gross concrete area horizontally in walls of water-bearing structures.

7. Temperature steel shall not be spaced further apart than five times the slab or wall thickness, nor more than 18 inches.

PART 3 – EXECUTION

3.01 DELIVERY, STORAGE AND HANDLING

A. All reinforcing shall be neatly bundled and tagged for placement when delivered to the job site. Bundles shall be properly identified for coordination with mill test reports.

B. Reinforcing steel shall be stored above ground on platforms or other supports and shall be protected from the weather at all times by suitable covering. It shall be stored in an orderly manner and plainly marked to facilitate identification.

C. Reinforcing steel shall at all times be protected from conditions conducive to corrosion until concrete is placed around it.

D. The surfaces of all reinforcing steel and other metalwork to be in contact with concrete shall be thoroughly cleaned of all dirt, grease, loose scale and rust, grout, mortar and other foreign substances immediately before the concrete is placed. Where there is delay in depositing concrete, reinforcing shall be reinspected and if necessary recleaned.

3.02 PLACEMENT

A. Reinforcing steel shall be accurately positioned as shown on the Drawings, and shall be supported and wired together to prevent displacement, using annealed iron wire ties or suitable clips at intersections. All reinforcing steel shall be supported by concrete, plastic or metal supports, spacers or metal hangers which are strong and rigid enough to prevent any displacement of the reinforcing steel. Where concrete is to be placed on the ground, supporting concrete blocks (or dobies) shall be used, in sufficient numbers to support the bars without settlement, but in no case shall such support be continuous. All concrete blocks used to support reinforcing steel shall be tied to the steel with wire ties which are embedded in the blocks. For concrete over formwork, the Contractor shall furnish concrete, metal, plastic, or other acceptable bar chairs and spacers.

B. The portions of all accessories in contact with the formwork shall be made of plastic or steel coated with a 1/8 inch minimum thickness of plastic which extends at least 1/2 inch from the concrete surface. Plastic shall be gray in color.

C. Tie wires shall be bent away from the forms in order to provide the specified concrete coverage.

D. Bars additional to those shown on the Drawings which may be found necessary or desirable by the Contractor for the purpose of securing reinforcement in position shall be provided by the Contractor at its own expense.

E. Unless otherwise specified, reinforcement placing tolerances shall be within the limits specified in Section 7.5 of ACI 318 except where in conflict with the requirements of the Building Code.

F. Bars may be moved as necessary to avoid interference with other reinforcing steel, conduits, or embedded items. If bars are moved more than one bar diameter, or enough to exceed the above tolerances, the resulting arrangement of bars shall be as acceptable to the Engineer.

G. Welded wire fabric reinforcement placed over horizontal forms shall be supported on slab bolsters having gray, plastic coated standard type legs as specified in Paragraph B herein. Slab bolsters shall be spaced not less than 30 inches on centers, shall extend continuously across the entire width of the reinforcing mat, and shall support the reinforcing mat in the plane shown on the Drawings.

H. Welded wire fabric placed over the ground shall be supported on wired concrete blocks (dobies) spaced not more than 3 feet on centers in any direction. The construction practice of placing welded wire fabric on the ground and hooking into place in the freshly placed concrete shall not be used.

I. The clear distance between parallel bars (except in columns and between multiple layers of bars in beams) shall be not less than the nominal diameter of the bars nor less than 1 1/3 times the maximum size of the coarse aggregate, nor less than one inch.

J. Where reinforcement in beams or girders is placed in 2 or more layers, the clear distance between layers shall be not less than one inch.

K. In columns, the clear distance between longitudinal bars shall be not less than 1 1/2 times the bar diameter, nor less than 1 1/2 times the maximum size of the coarse aggregate, nor less than 1 1/2 inches.

L. The clear distance between bars shall also apply to the distance between a contact splice and adjacent splices or bars.

M. Reinforcing bar splices shall only be used at locations shown on the Drawings. When it is necessary to splice reinforcement at points other than where shown, the character of the splice shall be as acceptable to the Engineer.

N. The length of lap for reinforcing bars, unless otherwise shown on the Drawings shall be in accordance with ACI 318, Section 12.15.1 for a class B splice.

O. Laps of welded wire fabric shall be in accordance with the ACI 318. Adjoining sheets shall be securely tied together with No. 14 tie wire, one tie for each 2 running feet. Wires shall be staggered and tied in such a manner that they cannot slip.

P. Couplers which are located at a joint face shall be a type which can be set either flush or recessed from the face as shown on the Drawings. The couplers shall be sealed during concrete placement to completely eliminate concrete or cement paste from entering. After the concrete is placed, couplers intended for future connections shall be plugged and sealed to prevent any contact with water or other corrosive materials. Threaded couplers shall be plugged with plastic plugs which have an O-ring seal.

Q. Reinforcing shall not be straightened or rebent in a manner which will injure the material. Bars with kinks or bends not shown on the Drawings shall not be used. All bars shall be bent cold, unless otherwise permitted by the Engineer. No bars partially embedded in concrete shall be field bent except as shown on the Drawings or specifically permitted by the Engineer.

R. Dowel Adhesive System shall be installed in strict conformance with the manufacturer's recommendations and as required in Article 2.04 above. A representative of the manufacturer must be on site prior to adhesive dowel installation to provide instruction on proper installation procedures for all adhesive dowel installers. Testing of adhesive dowels shall be as indicated below. If the dowels have a hook at the end to be embedded in subsequent work, an approved mechanical coupler shall be provided at a convenient distance from the face of existing concrete to facilitate adhesive dowel testing while maintaining required hook embedment in subsequent work.

S. Adhesive Dowel Testing

1. At all locations where adhesive dowels are shown on the Drawings, at least 5 percent of all adhesive dowels installed shall be tested to the value indicated on the Drawings, with a minimum of one tested dowel per group. If no test value is indicated on the Drawings but the installed dowel is under direct tension, the Contractor shall notify the Engineer to verify the required test value.

2. Contractor shall submit a plan and schedule indicating locations of dowels to be tested, load test values and proposed dowel testing procedure (including a diagram of the testing equipment proposed for use) prior to conducting any testing. The testing equipment shall have a minimum of three support points and shall be of sufficient size to locate the edge of supports no closer than two times the anchor embedment depth from the center of the anchor.

3. Where Contract Documents indicate adhesive dowel design is the Contractor's responsibility, the Contractor shall submit a plan and schedule indicating locations of dowels to be tested and load test values, sealed by a Professional Engineer currently registered in the State of Florida. The Contractor shall also submit documentation indicating the Contractor's testing procedures have been reviewed and the proposed procedures are acceptable.

4. Adhesive Dowel shall have no visible indications of displacement or damage during or after the proof test. Concrete cracking in the vicinity of the dowel after loading shall be considered a failure. Dowels exhibiting damage shall be removed and replaced. If more than 5 percent of tested dowels fail, then 100 percent of dowels shall be proof tested.

5. Proof testing of adhesive dowels shall be performed by an independent testing laboratory hired directly by the Contractor. The Contractor shall be responsible for costs of all testing, including additional testing required due to previously failed tests.

3.03 CLEANING AND PROTECTION

A. Reinforcing steel shall at all times be protected from conditions conducive to corrosion until concrete is placed around it.

B. The surfaces of all reinforcing steel and other metalwork to be in contact with concrete shall be thoroughly cleaned of all dirt, grease, loose scale and rust, grout, mortar and other foreign substances immediately before the concrete is placed. Where there is delay in depositing concrete, reinforcing shall be reinspected and, if necessary recleaned.

- END OF SECTION -

SECTION 03290

JOINTS IN CONCRETE

PART 1 – GENERAL

1.01 THE REQUIREMENT

A. The Contractor shall construct all joints in concrete at the locations shown on the Drawings. Joints required in concrete structures are of various types and will be permitted only where shown on the Drawings, unless specifically accepted by the Engineer.

B. Construction joints, expansion joints, contraction joints and control joints shall be provided at the locations shown and formed in accordance with the details shown on the Drawings.

C. Waterstops shall be provided where shown on the Drawings, and in all waterbearing joints in hydraulic structures.

1.02 RELATED WORK SPECIFIED ELSEWHERE

A. Section 03100 - Concrete Formwork

B. Section 03200 - Concrete Reinforcement

C. Section 03300 - Cast in Place Concrete.

D. Section 03315 - Grout

E. Section 03350 - Concrete Finishes

F. Section 03370 - Concrete Curing

1.03 REFERENCE SPECIFICATIONS, CODES AND STANDARDS

A. Without limiting the generality of other requirements of these Specifications, all work specified herein shall conform to or exceed the applicable requirements of the following documents to the extent that the provisions therein are not in conflict with the requirements of this Section.

1. Federal Specifications:

   a. TT S 00227E(3) Sealing Compound, Elastomeric Type, Multi component (For Caulking, Sealing, And Glazing Buildings And Other Structures).

2. U.S. Army Corps of Engineers Standard Specifications

   a. CRD C572

3. Commercial Standards:

   a. ASTM C 920 Specification for Elastomeric Joint Sealants.

b. ASTM D 624 Test Method for Rubber Property Tear Resistance.

c. ASTM D 638 Test Method for Tensile Properties of Plastics.

d. ASTM D 746 Test Method for Brittleness Temperature of Plastics and Elastomers by Impact.

e. ASTM D 747 Test Method for Apparent Bending Modules of Plastics by Means of a Cantilever Beam.

f. ASTM D 1752 Specification for Preformed Sponge Rubber and Cork Expansion Joint Fillers for Concrete Paving and Structural Construction.

g. ASTM D 2240 Test Method for Rubber Property Durometer Hardness.

1.04 TYPES OF JOINTS

A. Construction Joints: When fresh concrete is placed against a hardened concrete surface, the joint between the two pours is called construction joint. Unless noted otherwise, all joints in water bearing structures shall be provided with a waterstop of the shape specified herein or shown on the Drawings.

B. Contraction Joints: Contraction joints are similar to construction joints except that the fresh concrete shall not bond to the hardened surface of the first pour, which shall be coated with a bond breaker. The slab reinforcement shall be stopped 4 1/2 inches from the joint; which is provided with a sleeve type dowel, to allow shrinkage of the concrete of the second pour. Waterstop and/or sealant groove shall also be provided when specified on the Drawings.

C. Expansion Joints: To allow the concrete to expand freely, a space is provided between the two pours, the joint shall be formed as detailed on the Drawings. This space is obtained by placing a preformed joint filler against the first pour, which acts as a form for the second pour. Unless noted otherwise, all expansion joints in water bearing members shall be provided with a 9-inch wide waterstop. Preformed joint filler shall be installed with the edge at the indicated distance below or back from finished concrete surface, and shall have a slightly tapered, dressed, and oiled wood strip secured to or placed at the edge thereof during concrete placement, which shall later be removed to form space for sealing material. The space so formed shall be filled with a joint sealant material as specified herein. The joint sealant shall be isolated from the filler using a bond breaker.

D. Control Joints: The function of the control joint is to provide a weaker plane in the concrete, where shrinkage cracks will probably occur. A groove, of the shape and dimensions shown on the Drawing, is formed or saw cut in the concrete. This groove shall be filled with a joint sealant.

1.05 SUBMITTALS

A. Waterstops: Prior to production of the material required under this contract, qualification samples shall be submitted. Such samples shall consist of extruded or molded sections of each size or shape to be used and shall be accomplished so that the material and workmanship represents in all respects the material to be furnished under this contract. The balance of the material to be used under this contract shall not be produced until after

the Engineer has reviewed the qualification samples. The samples shall be delivered to a location on site indicated by the Engineer.

B. Joint Sealant: Prior to ordering the sealant material, the Contractor shall submit to the Engineer for the Engineer's review, sufficient data to show general compliance with the requirements of the Contract Documents.

C. Contractor shall submit product data sheets of all materials proposed under this section.

D. Shipping Certification: The Contractor shall provide written certification from the manufacturer as an integral part of the shipping form, to show that all of the material shipped to this project meets or exceeds the physical property requirements of the Contract Documents. Contractor certificates are not acceptable.

E. The Contractor shall submit placement Shop Drawings showing the location and type of all joints for each structure.

1.06 QUALITY ASSURANCE

A. Waterstop

1. Review: It is required that all waterstop field joints shall be subject to review inspection, and no such work shall be scheduled or started without having made prior arrangements with the Engineer to provide for the required reviews. Not less than 24 hours' notice shall be provided to the Engineer for scheduling such reviews.

2. All field joints in waterstops will be subject to rigid review for misalignment, bubbles, inadequate bond, porosity, cracks, offsets, and other defects which would reduce the potential resistance of the material to water pressure at any point. All defective joints shall be replaced with material which will pass said review, and all faulty material shall be removed from the site and disposed of by the Contractor at its own expense.

3. The following defects represent a partial list of defects which shall be grounds for rejection:

a. Offsets at joints greater than 1/16 inch or 15 percent material thickness, at any point, whichever is less.

b. Exterior crack at joint, due to incomplete bond, deeper than 1/16 inch or 15 percent of material thickness, at any point, whichever is less.

c. Any combination of offset or exterior crack which will result in a net reduction in the cross section of the waterstop in excess of 1/16 inch or 15 percent of material thickness at any point, whichever is less.

d. Misalignment of joint which result in misalignment of the waterstop in excess of 1/2 inch in 10 feet.

e. Porosity in the welded joint as evidenced by visual inspection.

f. Bubbles or inadequate bonding which can be detected with pen knife test. (If, while prodding the entire joint with the point of a pen knife, the knife breaks

through the outer portion of the weld into a bubble, the joint shall be considered defective.)

1.07 GUARANTEE

A. The Contractor shall provide a two year written guarantee of the entire sealant installation against faulty and/or incompatible materials and workmanship, together with a statement that it agrees to repair or replace, to the satisfaction of the City, at no additional cost to the City, any such defective areas which become evident within said two year guarantee period.

PART 2 – PRODUCTS

2.01 PVC WATERSTOPS

A. General: Waterstops shall be extruded from an elastomeric polyvinylchloride compound containing the plasticizers, resins, stabilizers, and other materials necessary to meet the requirements of these Specifications. No reclaimed or scrap material shall be used. The Contractor shall obtain from the waterstop manufacturer and shall furnish to the Engineer for review, current test reports and a written certification of the manufacturer that the material to be shipped to the job meets the physical requirements as outlined in the U.S. Army Corps of Engineers Specification CRD C572 and listed in Paragraph C. below.

B. Multi Rib Waterstops: All PVC waterstops shall be of Multi rib construction. Waterstops for construction joints shall be serrated style 732 by Greenstreak or equal. Waterstops for expansion joints shall be Style 738 by Greenstreak or equal. T type waterstops installed against existing concrete shall be Style 609 by Greenstreak, or equal. Compatible baten bars and anchor bolts shall be supplied by the same manufacturer. Prefabricated joint fittings (90º bends and tees) shall be used at all intersections of the ribbed type waterstops.

C. Waterstop Testing Requirements: When tested in accordance with the specified test standards, the waterstop material shall meet or exceed the following requirements:

	Value	**ASTM Std.**
Tensile Strength-min (psi)	1750	D 638, Type IV
Ultimate Elongation-min (percent)	350	D 638, Type IV
Low Temp. Brittleness-Max (degrees F)	-35	D 746
Stiffness in Flexure-min (psi)	400	D 747
Accelerated Extraction (CRD-C572)		
Tensile Strength-min (psi)	1500	D 638, Type IV
Ultimate Elongation-min (percent)	300	D 638, Type IV

Effect of Alkalies (CRD-C572)		
Ultimate Elongation-min (percent)	300	D 638, Type IV
Change in Weight (percent)	+0.25/-0.10	----
Change in Durometer, Shore A	+5	D 2240
Finish Waterstop		
Tensile Strength-min (psi)	1400	D 638, Type IV
Ultimate Elongation-min (percent)	280	D 638, Type IV

2.02 CHEMICAL RESISTANT WATERSTOPS

A. General: Waterstops shall be manufactured from thermoplastic elastomeric rubber material. The synthetic rubber shall be provide a high resistance to acids, bases, alcohols, oils, solvents or chemicals. No reclaimed material shall be used. The Contractor shall obtain from the waterstop manufacturer and furnish to the Engineer for review, current test reports and a written certification of the manufacturer that the material to be shipped to the job meets the physical requirements outlined herein. Waterstop connections shall be heat welded. All waterstop corners, intersections, and directional changes shall be miter cut, heat welded, factory fabricated. Only straight butt splices shall be allowed in the field.

B. Multi-Rib Waterstops: All chemical resistant waterstops shall be of multi-rib construction. Waterstops for expansion joints shall be 9”x3/16” ribbed with a center bulb. Waterstops for construction joints shall be 6”x3/16” ribbed with a center bulb. Chemical resistant waterstops shall be Westec Type TPE-R synthetic rubber, manufactured by Westec Barrier Technologies, St. Louis, MO, or equal.

C. Waterstop Physical Properties: When tested in accordance with the specified test standards, the waterstop material shall meet or exceed the following requirements:

Physical Property	**Value**	**ASTM Std.**
Tensile Strength	1800 psi	D-412
Ultimate Elongation	450%	D-412
100% Modulus	1000 psi	D-412
Shore A Hardness	85 units ± 5 units	D-2240
Brittle Point	-70ºF	D-746
Ozone Resistance	450 pphm passed	D-1171

D. Weathering Performance: When tested in accordance with the specified test standards, the waterstop material shall meet or exceed the following requirements:

Physical Property	Value	ASTM Std.
Tensile Strength (% Retention)	87%	D-412
Ultimate Elongation (% Retention)	84%	D-412
Shore A Hardness (units change)	7 units	D-2240

E. Chemical Resistance Properties: When tested in accordance with ASTM D-471 after 166 hours of full immersion at 73.4oF (23oC), the waterstop material shall meet or exceed the following requirements:

Fluid	Physical Property	Value
Sulfuric Acid 98%	Ultimate Elongation	77% Retention
	Ultimate Tensile	82% Retention
	100% Modulus	108% Retention
	Hardness Change Shore A	-1 Unit
	Weight Change	2.1%
Sodium Hydroxide 50%	Ultimate Elongation	101% Retention
	Ultimate Tensile	107% Retention
	100% Modulus	104% Retention
	Hardness Change Shore A	-4 Unit
	Weight Change	-0.1%

2.03 HYDROPHILIC WATERSTOPS

A. Hydrophilic waterstops shall be designed to expand and seal under hydrostatic conditions. At construction joints, the waterstops shall be Adeka Ultraseal MC 2010 M for wall/slab thickness greater than 9 inches, and Adeka Ultraseal KBA-1510FF for wall/slab thickness less than 9 inches or equal. At expansion joints, the waterstops shall be Adeka Ultraseal KM-3030M or equal.

B. Plate fabrications used to plug flow channels for future expansion or otherwise to close wall openings shall be caulked using hydrophilic waterstops designed for the application. Caulking agents shall be Adeka Ultraseal P201 or equal.

2.04 JOINT SEALANT

A. Joint sealant shall comply with Section 07920 entitled “Sealants and Caulking”.

2.05 EXPANSION JOINT MATERIAL

A. Preformed expansion joint material shall be non-extruding, and shall be one of the following types:

1. Type I – Sponge rubber, conforming to ASTM D1752, Type I

2. Type II – Cork, conforming to ASTM D1752, Type II

3. Type III – Self-expanding cork, conforming to ASTM D1752, Type III

4. Type IV – Bituminous fiber, conforming to ASTM Designation D1752

2.06 BACKER ROD

A. Backer rod shall comply with Section 07920 entitled “Sealants and Caulking”.

2.07 BOND BREAKER

A. Bond breaker shall be Super Bond Breaker as manufactured by Burke Company, San Mateo, California; Hunt Process 225 TU as manufactured by Hunt Process Co., Santa Fe Springs, CA; Select Cure CRB as manufactured by Select Products Co., Upland, CA; or equal. It shall contain a fugitive dye so that areas of application will be readily distinguishable.

2.08 CONTRACTION JOINT INSERTS

A. Contraction joint inserts shall be Transverse-Control Joints by Greenstreak Plastic Products or equal.

PART 3 – EXECUTION

3.01 GENERAL

A. Unless otherwise shown on the Drawings, waterstops of the type specified herein shall be embedded in the concrete across joints as shown. All waterstops shall be fully continuous for the extent of the joint. Splices necessary to provide such continuity shall be accomplished in conformance to printed instructions of manufacturer of the waterstops. The Contractor shall take suitable precautions and means to support and protect the waterstops during the progress of the Work and shall repair or replace at its own expense any waterstops damaged during the progress of the Work. All waterstops shall be stored so as to permit free circulation of air around the waterstop material.

B. When any waterstop is installed in the concrete on 1 side of a joint, while the other half or portion of the waterstop remains exposed to the atmosphere for more than 14 days, suitable precautions shall be taken to shade and protect the exposed waterstop from direct

rays of the sun during the entire exposure and until the exposed portion of the waterstop is embedded in concrete.

3.02 CONSTRUCTION JOINTS

A. Construction joints shall be as shown on the Drawings. Otherwise, Contractor shall submit description of the joint and its location to Engineer for approval.

B. Unless noted otherwise on the Drawings, construction joints shall be located near the middle of the spans of slabs, beams, and girders unless a beam intersects a girder at this point. In this case, the joints in the girders shall be offset a distance equal to twice the width of the beam. Joints in walls and columns shall be at the underside of floors, slabs, beams, or girders and the top of footings or floor slabs unless noted otherwise on Drawings. Beams, girders, brackets, column capitals, haunches, and drop panels shall be placed at the same time as slabs. Joints shall be perpendicular to the main reinforcement.

C. Unless noted otherwise on the Drawings, maximum Maximum1 distance between horizontal joints in slabs and vertical joints in walls shall be 45' 0". For exposed walls with fluid or earth on the opposite side, the spacing between vertical and horizontal joints shall be a maximum of 25’-0” unless noted otherwise on the Drawings1.

D. All corners shall be part of a continuous placement, and should a construction joint be required, the joint shall not be located closer than five feet from a corner.

E. All reinforcing steel and welded wire fabric shall be continued across construction joints. Keys and inclined dowels shall be provided as shown on the Drawings or as directed by the Engineer. Longitudinal keys shall be provided in all joints in walls and between walls and slabs or footings, except as specifically noted otherwise on the Drawings. Size of keys shall be as shown on the Drawings.

F. All joints in water bearing structures shall have a waterstop. All joints below grade in walls or slabs which enclose an accessible area shall have a waterstop.

3.03 SPLICES IN PVC WATERSTOPS

A. Splices in waterstops shall be performed by heat sealing the adjacent waterstop sections in accordance with the manufacturer's printed recommendations. It is essential that:

1. The material not be damaged by heat sealing.

2. The splices have a tensile strength of not less than 60 percent of the unspliced materials tensile strength.

3. The continuity of the waterstop ribs and of its tubular center axis be maintained.

B. Butt joints of the ends of 2 identical waterstop sections may be made while the material is in the forms.

C. All joints in waterstop involving more than 2 ends to be joined together, and all joints which involve an angle cut, alignment change, or the joining of 2 dissimilar waterstop sections shall be factory fabricated with not less than 24-inch long strips of material beyond the

joint. Upon being inspected and accepted, such prefabricated waterstop joint assemblies shall be installed in the forms and the ends of the 24-inch strips shall be butt welded to the straight run portions of waterstop in place in the forms.

3.04 JOINT CONSTRUCTION

A. Setting PVC Waterstops: In order to eliminate faulty installation that may result in joint leakage, particular care shall be taken of the correct positioning of the waterstops during installation. Adequate provisions must be made to support the waterstops during the progress of the Work and to insure the proper imbedment in the concrete. The symmetrical halves of the waterstops shall be equally divided between the concrete pours at the joints. The center axis of the waterstops shall be coincident with the joint openings. Maximum density and imperviousness of the concrete shall be insured by thoroughly working it in the vicinity of all joints.

B. In placing PVC waterstops in the forms, means shall be provided to prevent them from being folded over by the concrete as it is placed. Unless otherwise shown, all waterstops shall be held in place with light wire ties on 12 inch centers which shall be passed through the edge of the waterstop and tied to the curtain of reinforcing steel. Horizontal waterstops, with their flat face in a vertical plane, shall be held in place with continuous supports to which the top edge of the waterstop shall be tacked. In placing concrete around horizontal waterstops, with their flat face in a horizontal plane, concrete shall be worked under the waterstops by hand so as to avoid the formation of air and rock pockets.

C. Joint Location: Construction joints, and other types of joints, shall be provided where shown on the Drawings. When not shown on the Drawings, maximum distance between horizontal joints in slabs and vertical joints in walls shall be 45-feet, and maximum distance between vertical and horizontal joints for earth or water retaining walls shall be 25-feet, unless noted otherwise. The location of all joints, of any type, shall be submitted for review by the Engineer.

D. Joint Preparation: Special care shall be used in preparing concrete surfaces at joints where bonding between two sections of concrete is required. Unless otherwise shown on the Drawings, such bonding will be required at all horizontal joints in walls. Surfaces shall be prepared in accordance with the requirements of Section 03300 entitled "Cast in Place Concrete."

E. Adequate means shall be provided for anchoring the waterstop in concrete. Waterstops shall be positioned so that they are equally embedded in the concrete on each side of the joint.

F. Sealant application shall be in accordance with the manufacturer's printed instructions. The surfaces of the groove for the sealant shall not be coated. Concrete next to waterstops shall be placed in accordance with the requirements of Section entitled, "Cast in Place Concrete."

G. The primer and sealant shall be placed strictly in accordance with the printed recommendations of the manufacturer, taking special care to properly mix the sealant prior to application. All sealant shall cure at least 7 days before the structure is filled with water.

H. All sealant shall be installed by a competent waterproofing specialty contractor who has a successful record of performance in similar installations. Before work is commenced, the

crew doing the Work shall be instructed as to the proper method of application by a representative of the sealant manufacturer.

I. Thorough, uniform mixing of 2-part, catalyst cured materials is essential; special care shall be taken to properly mix the sealer before its application. Before any sealer is placed, the Contractor shall arrange to have the crew doing the Work carefully instructed as to the proper method of mixing and application by a representative of the sealant manufacturer.

J. Any joint sealant which, after the manufacturer's recommended curing time for the job conditions of the Work hereunder, fails to fully and properly cure shall be completely removed; the groove shall be thoroughly sandblasted to remove all traces of the uncured or partially cured sealant and primer, and shall be re sealed with the specified joint sealant. All costs of such removal, joint treatment, re sealing, and appurtenant work shall be at the expense of the Contractor.

3.05 INSTALLATION OF EXPANSION JOINT MATERIAL AND SEALANTS

A. Type I, II, or III shall be used in all expansion joints in structures and concrete pavements unless specifically shown otherwise on the Drawings. Type IV shall be used in sidewalk and curbing and other locations specifically shown on the Drawings.

B. All expansion joints exposed in the finish work, exterior and interior, shall be sealed with the specified joint sealant. Expansion joint material and sealants shall be installed in accordance with manufacturer's recommended procedures and as shown on the Drawings.

C. Expansion joint material that will be exposed after removal of forms shall be cut and trimmed to ensure a neat appearance and shall completely fill the joint except for the space required for the sealant. The material shall be held securely in place and no concrete shall be allowed to enter the joint or the space for the sealant and destroy the proper functions of the joint.

D. A bond breaker shall be used between expansion joint material and sealant. The joint shall be thoroughly clean and free from dirt and debris before the primer and the sealant are applied. Where the finished joint will be visible, masking of the adjoining surfaces shall be carried out to avoid their discoloration. The sealant shall be neatly tooled into place and its finished surfaces shall present a clean and even appearance.

E. Type 1 joint sealant shall be used in all expansion and contraction joints in concrete, except where Type 7 or Type 8 is required as stated below, and wherever else specified or shown on the Drawings. It shall be furnished in pour grade or gun grade depending on installation requirements. Primers shall be used as required by the manufacturer. The sealant shall be furnished in colors as directed by the Engineer.

F. Type 8 joint sealant shall be used in all concrete pavements and floors subject to heavy traffic and wherever else specified or shown on the Drawings.

G. Type 7 joint sealant shall be used for all joints in chlorine contact tanks and wherever specified or shown on the Drawings.

- END OF SECTION -

SECTION 03300

CAST-IN-PLACE CONCRETE

PART 1 – GENERAL

1.01 THE REQUIREMENT

A. The Contractor shall furnish all materials for concrete in accordance with the provisions of this Section and shall form, mix, place, cure, repair, finish, and do all other work as required to produce finished concrete, all in accordance with the requirements of the Contract Documents.

B. The requirements in this section shall apply to the following types of concrete:

1. Class A1 Concrete: Normal weight concrete used at all non-water-bearing structures, unless otherwise noted.

2. Class A2 Concrete: Normal weight concrete used at all water-bearing structures and containment structures, unless otherwise noted.

3. Class A3 Concrete: Normal weight concrete used at all walls of water bearing structures. Class A3 concrete is similar to Class A2 except Class A3 shall contain a mandatory addition of high range water reducer to aid in placement of concrete.

4. Class B Concrete: Normal weight concrete with pea-rock aggregate. Class B concrete shall be used only at locations indicated on the Drawings.

5. Class C Concrete: Normal weight concrete used in electrical/instrumentation ductbanks, pipe encasements and sidewalks.

6. Flowable Fill: Lean concrete proportioned without the use of coarse aggregate primarily for use as pipe backfill. Flowable fill shall be utilized only at locations indicated on the Drawings.

7. Tremie Concrete: Concrete indicated to be placed underwater.

8. Grout is specified in Section 03315 entitled "Grout".

1.02 RELATED WORK SPECIFIED ELSEWHERE

A. Section 01300 - Submittals

B. Section 01400 - Quality Control

C. Section 03100 - Concrete Formwork

D. Section 03200 - Concrete Reinforcement

E. Section 03400 - Precast Concrete, General

F. Section 03315 - Grout

G. Section 05500 - Metal Fabrications

H. Section 07190 - Vapor Barrier

1.03 REFERENCE SPECIFICATIONS, CODES, AND STANDARDS

A. Without limiting the generality of other requirements of these Specifications, all work specified herein shall conform to or exceed the requirements of the Florida Building Code (FBC) and the applicable requirements of the following documents to the extent that the provisions of such documents are not in conflict with the requirements of this Section.

B. Codes and Standards

1. The Building Code, as referenced herein, shall be the Florida Building Code.

C. Federal Specifications

1. UU B 790A (Int.Amd. 1) Building Paper, Vegetable Fiber (Kraft, Waterproofed, Water Repellant and Fire Resistant).

D. Commercial Standards

1. ACI 214 Recommended Practice for Evaluation of Strength Test Results of Concrete.

2. ACI 301 Specifications for Structural Concrete for Buildings.

3. ACI 305 Hot Weather Concreting.

4. ACI 306 Cold Weather Concreting.

5. ACI 309 Recommended Practice for Consolidation of Concrete

6. ACI 315 Details and Detailing of Concrete Reinforcement.

7. ACI 318 Building Code Requirements for Reinforced Concrete.

8. ACI 347 Recommended Practice for Concrete Formwork.

9. ACI 350 Environmental Engineering Concrete Structures.

10. ASTM C 31 Methods of Making and Curing Concrete Test Specimens in the Field.

11. ASTM C 33 Specification for Concrete Aggregates.

12. ASTM C 39 Test Method for Compressive Strength of Cylindrical Concrete Specimens.

13. ASTM C 88 Test Method for Soundness of Aggregates by use of Sodium Sulfate or Magnesium Sulfate.

14. ASTM C 94 Specification for Ready-Mixed Concrete.

15. ASTM C 114 Method for Chemical Analysis of Hydraulic Cement.

16. ASTM C 136 Method for Sieve Analysis of Fine and Coarse Aggregate.

17. ASTM C 143 Test Method for Slump of Portland Cement Concrete.

18. ASTM C 150 Specification for Portland Cement.

19. ASTM C 156 Test Method for Water Retention by concrete Curing Materials.

20. ASTM C 157 Test Method for length Change of Hardened Cement Mortar and Concrete.

21. ASTM C 192 Method of Making and Curing concrete Test Specimens in the Laboratory.

22. ASTM C 227 Standard Test Method for Potential Alkali Reactivity of Cement Aggregate Combinations (Mortar-Bar Method).

23. ASTM C 260 Specification for Air-Entraining Admixtures for Concrete.

24. ASTM C 289 Standard Test Method for Potential Reactivity of Aggregates (Chemical Method).

25. ASTM C 494 Specification for Chemical Admixtures For Concrete.

26. ASTM C 586 Standard Test Method for Potential Alkali Reactivity of Carbonate Rocks for Concrete Aggregates (Rock Cylinder Method).

27. ASTM C 618 Standard Specification for Fly Ash and Raw or Calcined Natural Pozzolan for use as a Mineral Admixture in Portland Cement Concrete.

28. ASTM D 1751 Specification for preformed Expansion Joint Fillers for Concrete Paving and Structural Construction (Non-extruding and Resilient Bituminous Types).

29. ASTM D 6103 Standard Test Method for Flow Consistency of Controlled Low Strength Material

30. ASTM E11 Specification for Wire-Cloth Sieves for Testing Purposes.

31. ASTM E 119 Method for Fire Tests of Building Construction and Materials.

1.04 SUBMITTALS

A. The design mixes to be used shall be prepared by qualified persons and submitted for review. The design of the mix is the responsibility of the Contractor subject to the limitations of the specifications. Review processing of this submission will be required only as evidence the mix has been designed by qualified persons and that the minimum requirements of the specifications have been met. Such review will in no way alter the responsibility of the Contractor to furnish concrete meeting the requirements of the specifications. If in the progress of the work the sources of materials change in

characteristics or the Contractor requests a new source in writing, the Contractor shall, at his expense submit new test data and information for the establishment of a new design mix. Submit mix designs for all classes of concrete to be used under this Contract. Mix design submittals shall include the following:

1. Sources of all materials and certifications of compliance with specifications for all sources of each material.

2. Certified current (less than one year old) chemical analysis of Portland Cement or Blended Cement to be used.

3. Certified current (less than one year old) chemical analysis of fly ash to be used.

4. Aggregate test results showing compliance with required standards, i.e. sieve analysis, aggregate soundness tests, etc.

5. Manufacturer's data on all admixtures stating compliance with required standards and are compatible with one another. Written conformance to the above mentioned requirements and the chloride ion content of the admixture will be required from the admixture manufacturer prior to Mix design review by the Engineer.

6. Field experience records and/or trial mix data for the proposed concrete mixes.

B. Where ready-mix concrete is used, the Contractor shall provide delivery tickets at the time of delivery of each load of concrete. In addition to the information required by ASTM C94, each ticket shall show the mix number, cement content, water/cementitious ratio, and amount of water allowed to be added to truck without exceeding required water/cementitious ratio.

C. A schedule of all concrete placement with volume of concrete planned to be placed each day.

D. A layout of all structures with all planned construction joint locations.

1.05 QUALITY ASSURANCE

A. Plant equipment and facilities shall meet all requirements of the Check List for Certification of Ready Mixed Concrete Production facilities of the National Ready Mixed Concrete Association and ASTM C 94.

B. Tests for compressive strength and slump of concrete will be performed as specified herein. Test for determining slump will be in accordance with the requirements of ASTM C 143.

C. The cost of initial trial mixes and initial laboratory tests to design the mixes including compression tests, sieve analysis, and tests on trial mixes shall be included in the Contract Price.

D. The cost of all tests during construction will be borne by the City. However, the Contractor shall be charged for the cost of any additional tests and investigation on work performed which does not meet the Specifications. All test results shall be sent directly to the

Engineer. All testing invoices shall be sent directly to the City. The Contractor shall be responsible for coordination of all tests with the testing laboratory.

E. Concrete for testing shall be supplied by the Contractor at no cost to the City City1, and the Contractor shall provide assistance to the Engineer in obtaining samples. The Contractor shall dispose of and clean up all excess material.

F. Construction Tolerances

G. The Contractor shall set and maintain concrete forms and perform finishing operations so as to ensure that the completed work is within the tolerances specified herein. Surface defects and irregularities are defined as finishes and are to be distinguished from tolerances. Tolerance is the specified permissible variation from lines, grades, or dimensions shown. Where tolerances are not stated in the Specifications, permissible deviations will be in accordance with ACI 347 and Section 03100 entitled "Concrete Formwork".

1.06 QUALITY CONTROL

A. Compressive Strength

1. Compression test specimens shall be taken during construction from the first placement of each class of concrete specified herein and at intervals thereafter as selected by the Engineer to insure continued compliance with these Specifications. At least one set of test specimens shall be made for each placement in excess of five cubic yards, or for each fifty (50) cubic yards of concrete placed, or for each 5000 square feet of surface area for slabs or walls, whichever is greater.

2. Samples of freshly mixed concrete shall be obtained in accordance with ASTM C 172, and compression test specimens for concrete shall be made in accordance with ASTM C 31. Specimens shall consist of at least five 6-inch diameter by 12-inch high cylinders, or eight 4-inch diameter by 8-inch high cylinders. Each cylinder shall be identified by a tag attached to the side of the cylinder.

3. The Contractor shall provide approved curing boxes for storage of cylinders on site. The insulated curing box shall be of sufficient size and strength to contain all the specimens made in any four consecutive working days and to protect the specimens from falling over, being jarred or otherwise disturbed during the period of initial curing. The box shall be erected, furnished and maintained by the Contractor. Such box shall be equipped to provide the moisture and to regulate the temperature necessary to maintain the proper curing conditions required by ASTM C31. Such box shall be located in an area free from vibration such as pile driving and traffic of all kinds. No concrete requiring inspection shall be delivered to the site until such storage curing box has been provided. Specimens shall remain undisturbed in the curing box until ready for delivery to the testing laboratory but not less than sixteen hours

4. Compression test shall be performed in accordance with ASTM C 39. For 6x12 cylinders, two test cylinders will be tested at 7 days and 2 at 28 days. For 4x8 cylinders, three test cylinders will be tested at 7 days and three at 28 days. The remaining cylinders will be held to verify test results, if needed.

B. Consistency

1. Consistency of the concrete will be checked by the Engineer by standard slump cone tests. The Contractor shall make any necessary adjustments in the mix as the Engineer may direct and shall upon written order suspend all placing operations in the event the consistency does not meet the intent of the specifications. No payment shall be made for delays, material or labor costs due to such eventualities.

2. Slump tests shall be made in accordance with ASTM C 143. Slump tests shall be performed as deemed necessary by the Engineer and each time compressive strength samples are taken.

C. Air Content

1. Samples of freshly mixed concrete will be tested for entrained air content by the Engineer in accordance with ASTM C 231.

2. Air content tests will be performed as deemed necessary by the Engineer and each time compressive strength samples are taken.

D. Evaluation and Acceptance of Concrete

1. Evaluation and acceptance of the compressive strength of concrete shall be according to the requirements of ACI 215 and ACI 318, Chapter 5 "Concrete Quality Mixing and Placing", and as specified herein.

2. If any concrete fails to meet these requirements, immediate corrective action shall be taken to increase the compressive strength for all subsequent batches of the type of concrete affected.

3. All concrete which fails to meet the ACI requirements and these specifications, is subject to removal and replacement at the cost of the Contractor. Additional testing may also be required to verify compressive strength of concrete. Additional testing shall involve extraction and testing of concrete cores in accordance with ASTM C 42. Engineer shall determine locations where concrete cores shall be taken. Nondestructive test methods shall not be used to verify strength of in-place concrete.

1.07 PRE-CONCRETE CONFERENCE

A. At least 35 days prior to start of the Concrete construction schedule, the Contractor shall conduct a meeting to review the proposed mix designs and to discuss the required methods and procedures to achieve the required concrete construction. The Contractor shall send a pre-concrete conference agenda to all attendees 20 days prior to the scheduled date of the conference.

B. The Contractor shall require responsible representatives of every party who is concerned with the concrete work to attend the conference, including but not limited to the following:

1. Contractor’s superintendent

2. For the concrete design mix – Laboratory retained for trial batching and tests

3. For field quality control – Concrete subcontractor, Concrete producer, Admixture Manufacturer(s), Concrete pumping Contractor

C. Minutes of the meeting shall be recorded, typed and printed by the Contractor and distributed by him to all parties concerned within five days of the meeting. One copy of the minutes shall also be transmitted to the Engineer.

D. The minutes shall include a statement by the admixture manufacturer(s) indicating that the proposed mix design and placing techniques can produce the concrete quality required by these Specifications.

E. The Engineer will be present at the conference. The Contractor shall notify the Engineer at least 20 days prior to the scheduled date of the conference.

PART 2 – MATERIALS

2.01 CONCRETE MATERIALS

A. Materials shall be delivered, stored, and handled so as to prevent damage by water or breakage. Only one brand of cement shall be used. Cement reclaimed from cleaning bags or leaking containers shall not be used. All cement shall be used in the sequence of receipt of shipments.

B. All materials furnished and stored for the work shall comply with the requirements of ACI 301, as applicable.

C. Materials for concrete shall conform to the following requirements:

1. Cement shall be standard brand Portland cement conforming to ASTM C 150 for Type II. Portland cement shall contain no more than 0.60 percent alkalies. The term "alkalies" referred to herein is defined as the sum of the percentage of sodium oxide and 0.658 times the percentage of potassium oxide (Na20 + 0.658 K20). These oxides shall be determined in accordance with ASTM C 114. A single brand of cement shall be used throughout the Work, and prior to its use, the brand shall be acceptable to the Engineer. The cement shall be suitably protected from exposure to moisture until used. Cement that has become lumpy shall not be used. Sacked cement shall be stored in such a manner so as to permit access for inspection and sampling. Certified mill test reports for each shipment of cement to be used shall be submitted to the Engineer if requested regarding compliance with these Specifications.

2. Fly ash shall meet the requirements of ASTM C 618 for Class F, except the loss on ignition shall not exceed 4%. The fly ash constituent shall be maximum 15% of the total weight of the combined Portland cement and fly ash. For concrete to be used in environmental concrete structures, i.e. process structures or fluid containing structures, inclusion of fly ash in concrete mix is mandatory.

3. Water shall be potable, clean, and free from objectionable quantities of silty organic matter, alkali, salts and other impurities. The water shall be considered potable, for the purposes of this Section only, if it meets the requirements of the local governmental agencies.

4. Aggregates shall be obtained from pits acceptable to the Engineer, shall be non-reactive, and shall conform to the FBC and ASTM C 33. Maximum size of coarse aggregate shall be as specified in Article 2.04, Paragraph B of this Section. Lightweight sand for fine aggregate will not be permitted.

a. Coarse aggregates shall consist of clean, hard, durable gravel, crushed gravel, crushed rock or a combination thereof. The coarse aggregates shall be prepared and handled in two or more size groups for combined aggregates with a maximum size not greater than 1 inch. When the aggregates are proportioned for each batch of concrete the two size groups shall be combined.

b. Fine aggregates shall be manufactured sand that is hard and durable.

c. Combined aggregates shall be well graded from coarse to fine sizes, and shall be uniformly graded between screen sizes to produce a concrete that has optimum workability and consolidation characteristics. Where a trial batch is required for a mix design, the final combined aggregate gradations will be established during the trial batch process.

d. When tested in accordance with "Potential Reactivity of Aggregates (Chemical Method)" (ASTM C 289), the ratio of silica released to reduction in alkalinity shall not exceed 1.0.

e. When tested in accordance with "Organic Impurities in Sands for Concrete" (ASTM C 40), the fine aggregate shall produce a color in the supernatant liquid no darker than the reference standard color solution.

f. When tested in accordance with "Resistance to Abrasion of Small size Coarse Aggregate by Use of the Los Angeles Machine" (ASTM C 131), the coarse aggregate shall show a loss not exceeding 42 percent after 500 revolutions, or 10.5 percent after 100 revolutions.

g. When tested in accordance with "Soundness of Aggregates by Use of Sodium Sulfate or Magnesium Sulfate" (ASTM C 88), the loss resulting after five cycles shall not exceed 10 percent for fine or coarse aggregate when using sodium sulfate.

2.02 ADMIXTURES

A. Air-entraining agent meeting the requirements of ASTM C 260, shall be used. Sufficient air-entraining agent shall be used to provide a total air content of 3 to 5 percent. Air-entraining agent shall be Sika AER by Sika Corp., MB-VR by Master Builders, Darex AEA by Grace, AEA-92S by Euclid Chemical Company, or equal.

B. Admixtures shall be required at the Engineer's discretion or, if not required, may be added at the Contractor's option to control the set, effect water reduction, and increase workability. In either case, the addition of an admixture shall be at the Contractor's expense. The use of an admixture shall be subject to acceptance by the Engineer. Concrete containing an admixture shall be first placed at a location determined by the Engineer. If the use of an admixture is producing an inferior end result, the Contractor shall discontinue use of the admixture. Admixtures specified herein shall conform to the requirements of ASTM C 494. The required quantity of cement shall be used in the mix regardless of whether or not an admixture is used. Admixtures shall contain no free

chloride ions, be nontoxic after 30 days, and shall be compatible with and made by the same manufacturer as the air entraining admixture.

1. Water reducing admixture shall conform to ASTM C 494, Type A and shall contain no more than 0.05% chloride ions. Acceptable products are “Eucon Series” by the Euclid Chemical Company, “Pozzolith Series” by BASF, and “Plastocrete Series” by Sika Corporation.

2. High range water reducer shall be sulfonated polymer conforming to ASTM C 494, Type F or G. The use of high range water reducer is mandatory for Class A2 A3 1 concrete. The high range water reducer shall be accurately measured and pressure injected into the mixer as a single dose by an experienced technician. A standby system shall be provided and tested prior to each day’s operation of the job site system. Concrete shall be mixed at mixing speed for a minimum of 100 mixer revolutions after the addition of the high range water reducer. Acceptable products are “Eucon 37” or Plastol 5000 by the Euclid Chemical Company, “Rheobuild 1000 or Glenium Series” by BASF, and “Daracem 100 or Advaflow Series” by W.R. Grace.

3. A non-chloride, non-corrosive accelerating admixture shall be used when air temperature at time of placement is expected to be consistently below 40 degrees Fahrenheit as specifically approved by the Engineer. The admixture shall conform to ASTM C 494, Type C or E, and shall not contain more chloride ions than are present in municipal drinking water. The admixture manufacturer must have long-term non-corrosive test data from an independent testing laboratory (of at least a year’s duration) using an acceptable accelerated corrosion test method such as that using electrical potential measures. Acceptable products are “Accelguard 80/90 or NCA” by the Euclid Chemical Company and “Daraset” by W.R. Grace.

4. A water reducing retarding admixture shall be used when air temperature at time of placement is expected to be consistently above 90 degrees Fahrenheit as specifically approved by the Engineer. The admixture shall conform to ASTM, Type D and shall not contain more than 0.05% chloride ions. Acceptable products are “Eucon NR or Eucon Retarder 100” by the Euclid Chemical Company, “Pozzolith Retarder” by BASF, and “Plastiment” by Sika Corporation.

5. The Contractor shall submit certification from each admixture manufacturer that all admixtures utilized in the design mix are compatible with one another and properly proportioned.

6. Prohibited Admixtures: Calcium chloride, thiocyanate or admixtures containing more than 0.05 percent chloride ions are not permitted.

7. Certification: Written conformance to the above mentioned requirements and the chloride ion content of the admixture will be required from the admixture manufacturer prior to Mix design review by the Engineer.

2.03 ACCESSORIES

A. Epoxy adhesives shall be the following products for the applications specified to be used in strict accordance with manufacturer's recommendations.

1. For bonding freshly mixed, plastic concrete to hardened concrete, Sikadur 32 Hi Mod, LPL Epoxy Adhesive, as manufactured by Sika Chemical Corporation; Concresive 1001 LPL, as manufactured by Adhesive Engineering Company; or equal.

2. For bonding hardened concrete or masonry to steel, Colma Dur Gel, Sikadur Hi Mod Gel, or equal.

2.04 CONCRETE MIX

A. Concrete shall be composed of cement, admixtures, aggregates and water. These materials shall be of the qualities specified. The exact proportions in which these materials are to be used for different parts of the work will be determined by the Contractor. In general, the mix shall be designed to produce a concrete capable of being deposited so as to obtain maximum density and minimum shrinkage and, where deposited in forms, to have good consolidation properties and maximum smoothness of surface. Mix designs with more than 41 percent of sand of the total weight of fine and coarse aggregate shall not be used for Class A Concrete. The aggregate gradations shall be formulated to provide fresh concrete that will not promote rock pockets around reinforcing steel or embedded items. The proportions shall be changed whenever necessary or desirable to meet the required results at no additional cost to the City. All changes shall be subject to review by the Engineer.

B. The proportions of cement, aggregates, admixtures and water used in the concrete shall be based on tests of grading and moisture content of materials, slump of concrete mixture, strength of concrete and the following factors:

1. Class A1 Concrete (Normal weight concrete used at all non-water bearing structures, unless noted otherwise).

Minimum cementitious materials content, per cubic yard	611 lbs.
Maximum water-cementitious materials ratio, by weight	0.45
Slump range	3 inches to 4 inches with water reducing admixture
Coarse Aggregate	#57 per ASTM C33
Compressive strength at 28 days – F’c	4,000 psi
Air Content	3% $\pm$ 1%

2. Class A2 Concrete (Normal weight concrete used at all water bearing structures and containment structures, unless noted otherwise).

Minimum cementitious materials content, per cubic yard	611 lbs.

Maximum water-cementitious materials ratio, by weight	0.42
Slump range	3 inches to 4 inches with water reducing admixture
Coarse Aggregate	#57 per ASTM C33
Compressive strength at 28 days – F'c	4,500 psi
Air Content	3% ± 1%

3. Class A3 Concrete (Normal weight concrete used at all walls of water bearing structures. Class A3 concrete is similar to Class A2 except class A3 shall contain a mandatory addition of high range water reducer).

Minimum cementitious materials content, per cubic yard	611 lbs.
Maximum water-cementitious materials ratio, by weight	0.42
Slump range	3 inches maximum before addition of high range water reducing admixture 8 inches maximum after addition of high range water reducing admixture
Compressive strength at 28 days - F'c	4,500 psi
Coarse Aggregate	#57 per ASTM C33
Air Content	3% ± 1%

4. Class B Concrete (At locations shown on the Drawings).

Minimum cementitious materials content, per cubic yard	517 lbs.
Maximum water-cementitious materials ratio, by weight	0.50
Slump, maximum	5 inches
Compressive strength at 28 days - F'c	4,000 psi
Coarse Aggregate	Pearock
Air Content	3% ± 1%

5. Class C Concrete (Sidewalks, pipe encasements in the dry, thrust blocks and electrical duct banks)

Minimum cementitious materials content, per cubic yard	500 lbs.
Maximum water-cementitious materials ratio, by weight	0.60
Slump, maximum	5 inches
Compressive strength at 28 days - F'c	3,000 psi
Coarse Aggregate	#57 per ASTM C33
Air Content	3% ± 1%

6. Flowable Fill (In lieu of pipe bedding, select backfill)

Minimum cementitious materials content, per cubic yard	100 lbs.
Maximum water-cementitious materials ratio, by weight	5.0
Flowability, minimum	8 inches
Compressive strength at 28 days - F'c	50-150 psi
Coarse aggregate	none
Fine aggregate	limestone screenings

7. Tremie Concrete (Concrete placed under water)

Minimum cement content, per cubic yard	700 lbs.
Maximum water-cementitious materials ratio, by weight	0.45
Slump, maximum	9 inches
Compressive strength lbs. per sq. inch at 28 days - F'c	4,500

C. All Class A1, A2 and A3 concrete, unless noted otherwise on the Drawings, shall be air entrained concrete. A water reducing admixture may be added to the mix at the Contractor's option.

D. The mix proportions used shall be changed subject to the limitation specified herein, whenever such change is necessary or desirable to secure the required strength, density,

workability, and surface finish and the Contractor shall be entitled to no additional compensation because of such changes.

2.05 CONSISTENCY

A. The quantity of water entering into a batch of concrete shall be just sufficient, with a normal mixing period, to produce a concrete which can be worked properly into place without segregation, and which can be compacted by the vibratory methods herein specified to give the desired density, impermeability and smoothness of surface. The quantity of water shall be changed as necessary, with variations in the nature or moisture content of the aggregates, to maintain uniform production of a desired consistency. The consistency of the concrete in successive batches shall be determined by slump tests in accordance with ASTM C 143.

2.06 READY MIXED CONCRETE

A. Ready mixed concrete shall be used meeting the requirements as to materials, batching, mixing, transporting, and placing as specified herein and in accordance with ASTM C 94.

B. Ready mixed concrete shall be delivered to the site of the work, and discharge shall be completed within one and one half hour after the addition of the cement to the aggregates or before the drum has been revolved 250 revolutions, whichever is first. Upon delivery from the truck concrete temperature shall not exceed 90 degrees Fahrenheit.

C. Truck mixers shall be equipped with electrically actuated counters by which the number of revolutions of the drum or blades may be readily verified. The counter shall be of the resettable, recording type. The counters shall be actuated at the time of starting mixers at mixing speeds.

D. Each batch of concrete shall be mixed in a truck mixer for not less than 70 revolutions of the drum or blades at the rate of rotation designated by the manufacturer of equipment. Additional mixing, if any, shall be at the speed designated by the manufacturer of the equipment as agitating speed. All materials including mixing water shall be in the mixer drum before actuating the revolution counter for determining the number of revolution of mixing.

PART 3 – EXECUTION

3.01 PROPORTIONING AND MIXING

A. Proportioning of the concrete mix shall be based on the results of field experience or laboratory trial mixes in conformance with Section 5.3, “Proportioning on the Basis of Field Experience and/or Trial Mixtures” of ACI 318. When trial mixes are used they shall conform to the requirements of Chapter 3 "Proportioning" of ACI 301; provided, that the maximum slump for any concrete shall not exceed the limits specified in this Section of the Specifications.

B. When field experience records are inadequate to confirm the quality of a proposed concrete mix in accordance with Section 5.3, "Proportioning on the Basis of Field Experience and/or Trial Mixtures" of ACI 318, or when required by the Engineer, an independent testing laboratory designated by the Contractor and acceptable to the

Engineer shall test a trial batch of each of the preliminary concrete mixes submitted by the Contractor. The trial batches shall be prepared using the aggregates, cement and admixtures proposed for the project. The trial batch materials shall be of a quantity such that the testing laboratory can obtain enough samples to satisfy requirements stated below. Tests on individual materials stated in PRODUCTS should already be performed before any trial mix is done. The cost of laboratory trial batch tests for each specified concrete mix will be borne by the Contractor and the Contractor shall furnish and deliver the materials to the testing laboratory at no cost to the City.

C. An independent testing laboratory shall observe the preparation of the trial batch, and they shall prepare a minimum of fifteen (15) standard test cylinders in accordance with ASTM C 31 in addition to conducting slump (ASTM C 143), air content (C 231) and unit weight (C 138) tests. Compressive strength test on the cylinders shall subsequently be performed by the same laboratory in accordance with ASTM C 39 as follows: Test 3 cylinders at age 7 days; test 3 cylinders at age 21 days; test 3 cylinders at age 28 days and test 3 cylinders at 56 days. The cylinders shall be carefully identified as "Trial Mix, Contract No._____, Product_____." If the average 28-day compressive strength of the trial mix is less than that specified, or if any single cylinder falls below the required strength by more than 500 psi, the mix shall be corrected, another trial batch prepared, test cylinders taken, and new tests performed as before. Any such additional trial batch testing required shall be performed at no additional cost to the City. Adjustments to the mix shall be considered refinements to the mix design and shall not be the basis for extra compensation to the Contractor.

D. Mixing of concrete shall conform to the requirements of Chapter 7 of ACI 301 Specifications.

E. Retempering of concrete or mortar which has partially hardened will not be permitted.

3.02 PREPARATION

A. Earth surfaces shall be thoroughly wetted by sprinkling, prior to the placing of any concrete, and these surfaces shall be kept moist by frequent sprinkling up to the time of placing concrete thereon. A vapor barrier specified in Section 07190 entitled "Vapor Barrier" shall be placed. The surface shall be free from standing water, mud, and debris at the time of placing concrete.

B. No concrete shall be placed until the reinforcement steel and formwork have been erected in a manner acceptable to the Engineer. The Contractor shall notify the Engineer not less than two working days prior to Concrete Placement, allowing one day for review and any corrective measures which are required.

C. Joints in Concrete

1. Concrete surfaces upon or against which concrete is to be placed shall be given a roughened surface for good bond and a bonding agent shall be placed. Contractor shall use an epoxy bonding agent for bonding fresh concrete to existing concrete where shown on the drawings.

2. After the surfaces have been prepared all horizontal construction joints shall be covered with a layer of mortar approximately one inch thick. The mortar shall have the same proportions of cement and sand as the regular concrete mixture. The

water cement ratio of the mortar in place shall not exceed that of the concrete to be placed upon it, and the consistency of the mortar shall be suitable for placing and working in the manner hereinafter specified. The mortar shall be spread uniformly and shall be worked thoroughly into all irregularities of the surface. Wire brooms shall be used where possible to scrub the mortar into the surface. Concrete shall be placed immediately upon the fresh mortar.

D. Placing Interruptions

1. When placing of concrete is to be interrupted long enough for the concrete to take a set, the working face shall be given a shape by the use of forms or other means, that will secure proper union with subsequent work; provided that construction joints shall be made only where acceptable to the Engineer. Cold joints will be sufficient cause for rejection of the work.

E. Embedded Items

1. No concrete shall be placed until all formwork, installation of parts to be embedded, reinforcing steel, and preparation of surfaces involved in the placing have been completed and accepted by the Engineer at least four hours before placement of concrete. All surfaces of forms and embedded items that have become encrusted with dried grout from concrete previously placed shall be cleaned of all such grout before the surrounding or adjacent concrete is placed.

2. All inserts or other embedded items shall conform to the requirements herein.

F. All reinforcement, anchor bolts, sleeves, inserts, and similar items shall be set and secured in the forms where shown on the Drawings or by shop drawings and shall be acceptable to the Engineer before any concrete is placed. Accuracy of placement is the responsibility of the Contractor.

G. All anchor bolts called for on the drawings shall be cast in place in the concrete. Drilled, impact, adhesive or other types of anchors shall not be substituted for anchor bolts unless otherwise shown on the Drawings. Anchor bolts shall conform to the requirements set forth in Section 05050 entitled "Metal Fastening".

H. Casting New Concrete Against Old

1. Where concrete is to be cast against old concrete (any concrete which is greater than 60 days of age), the surface of the old concrete shall be thoroughly cleaned and roughened by sand blasting (exposing aggregate) prior to the application of an epoxy bonding agent.

I. No concrete shall be placed in any structure until all water entering the space to be filled with concrete has been properly cut off or has been diverted by pipes, or other means, and carried out of the forms, clear of the work. No concrete shall be deposited underwater, except where shown on the Drawings to be placed by the tremie method, nor shall the Contractor allow still water to rise on any concrete until the concrete has attained its initial set. Water shall not be permitted to flow over the surface of any concrete in such manner and at such velocity as will injure the surface finish of the concrete. Pumping or other necessary dewatering operations for removing ground water, if required, will be subject to the review of the Engineer.

J. Corrosion Protection

1. Pipe, conduit, dowels, and other ferrous items required to be embedded in concrete construction shall be so positioned and supported prior to placement of concrete that there will be a minimum of 2 inches clearance between said items and any part of the concrete reinforcement. Securing such items in position by wiring or welding them to the reinforcement will not be permitted.

2. Openings for pipes, inserts for pipe hangers and brackets, and the setting of anchors shall, where practicable, be provided for during the placing of concrete.

3. Anchor bolts shall be accurately set, and shall be maintained in position by templates while being embedded in concrete.

4. The surfaces of all metalwork to be in contact with concrete shall be thoroughly cleaned of all dirt, grease, loose scale and rust, grout, mortar, and other foreign substances immediately before the concrete is placed.

3.03 PLACING CONCRETE

A. Placing of concrete shall conform to the applicable requirements of Chapter 8 of ACI 301 and the requirements of this Section.

B. Non-Conforming Work or Materials

1. Concrete which upon or before placing is found not to conform to the requirements specified herein shall be rejected and immediately removed from the Work. Concrete which is not placed in accordance with these Specifications, or which is of inferior quality, shall be removed and replaced by and at the expense of the Contractor.

C. Unauthorized Placement

1. No concrete shall be placed except in the presence of duly authorized representative of the Engineer. The Contractor shall notify the Engineer at least 24 hours in advance of placement of any concrete.

D. Placement in Wall Forms

1. Concrete shall not be dropped through reinforcement steel or into any deep form, whether reinforcement is present or not, causing separation of the coarse aggregate from the mortar on account of repeatedly hitting rods or the sides of the form as it falls, nor shall concrete be placed in any form in such a manner as to leave accumulation of mortar on the form surfaces above the placed concrete. In such cases, some means such as the use of hoppers and, if necessary, vertical ducts of canvas, rubber, or metal shall be used for placing concrete in the forms in a manner that it may reach the place of final deposit without separation. In no case shall the free fall of concrete exceed 4 feet below the ends of ducts, chutes, or buggies.

2. Concrete shall be uniformly distributed during the process of depositing and in no case after depositing shall any portion be displaced in the forms more than 6 feet in horizontal direction. Concrete in forms shall be deposited in uniform horizontal layers

not deeper than 2 feet; and care shall be taken to avoid inclined layers or inclined construction joints except where such are required for sloping members. Each layer shall be placed while the previous layer is still soft. The rate of placing concrete in forms shall not exceed 5 feet of vertical rise per hour.

E. Casting New Concrete Against Old

1. An epoxy adhesive bonding agent shall be applied to set surfaces of construction joints according to the manufacturer's written recommendations.

F. Conveyor Belts and Chutes

1. All ends of chutes, hopper gates, and all other points of concrete discharge throughout the Contractor's conveying, hoisting and placing system shall be so designed and arranged that concrete passing from them will not fall separated into whatever receptacle immediately receives it. Conveyor belts, if used, shall be of a type acceptable to the Engineer. Chutes longer than 50 feet will not be permitted. Minimum slopes of chutes shall be such that concrete of the specified consistency will readily flow in them. If a conveyor belt is used, it shall be wiped clean by a device operated in such a manner that none of the mortar adhering to the belt will be wasted. All conveyor belts and chutes shall be covered. Sufficient illumination shall be provided in the interior of all forms so that the concrete at the places of deposit is visible from the deck or runway.

G. Placement in Slabs

1. Concrete placed in sloping slabs shall proceed uniformly from the bottom of the slab to the top, for the full width of the pour. As the work progresses, the concrete shall be vibrated and carefully worked around the slab reinforcement, and the surface of the slab shall be screeded in an up slope direction.

H. Temperature of Concrete

1. The temperature of concrete when it is being placed shall be not more than 90 degrees F. Concrete ingredients shall not be heated to a temperature higher than that necessary to keep the temperature of the mixed concrete, as placed, from falling below the specified minimum temperature. If concrete is placed when the weather is such that the temperature of the concrete would exceed 90 degrees Fahrenheit, the Contractor shall employ effective means, such as precooling of aggregates and mixing water using ice or placing at night, as necessary to maintain the temperature of the concrete, as it is placed, below 90 degrees F. The Contractor shall be entitled to no additional compensation on account of the foregoing requirements. During summer months concrete pours shall be scheduled in the morning or early part of the day when temperatures are cooler.

I. Pumping Equipment

1. Pumping equipment and procedures if used shall conform to the recommendations contained in the report of ACI Committee 304 on Placing Concrete by Pumping Methods, ACI 304.2R. The specified slump shall be measured at the point of discharge. The loss of slump in pumping shall not exceed 1-1/2 inches.

J. The order of placing concrete in all parts of the work shall be acceptable to the Engineer. In order to minimize the effects of shrinkage, the concrete shall be placed in units as bounded by construction joints shown on the Drawings. The placing of units shall be done by placing alternate units in a manner such that each unit placed shall have cured at least 7 days before the contiguous unit or units are placed, except that the corner sections of vertical walls shall not be placed until the 2 adjacent wall panels have cured at least 14 days.

K. The surface of the concrete shall be level whenever a run of concrete is stopped. To insure a level, straight joint on the exposed surface of walls, a wood strip at least 3/4-inch thick shall be tacked to the forms on these surfaces. The concrete shall be carried about 1/2-inch above the underside of the strip. About one hour after the concrete is placed, the strip shall be removed and any irregularities in the edge formed by the strip shall be leveled with a trowel and all laitance shall be removed.

L. As concrete is placed in the forms or in excavations, it shall be thoroughly settled and compacted, throughout the entire depth of the layer which is being consolidated, into a dense, homogeneous mass, filling all corners and angles, thoroughly embedding the reinforcement, eliminating rock pockets, and bringing only a slight excess of water to the exposed surface of concrete during placement. Vibrators shall be high speed power vibrators (8000 to 10,000 rpm) of an immersion type in sufficient number and with (at least one) standby units as required.

M. Care shall be used in placing concrete around waterstops. The concrete shall be carefully worked by rodding and vibrating to make sure that all air and rock pockets have been eliminated. Where flat strip type waterstops are placed horizontally, the concrete shall be worked under the waterstops by hand, making sure that all air and rock pockets have been eliminated. Concrete surrounding the waterstops shall be given additional vibration, over and above that used for adjacent concrete placement to assure complete embedment of the waterstops in the concrete.

N. Concrete in walls shall be internally vibrated and at the same time, stirred, or worked with suitable appliances, tamping bars, shovels, or forked tools until it completely fills the forms or excavations and closes snugly against all surfaces. Subsequent layers of concrete shall not be placed until the layers previously placed have been worked thoroughly as specified. Vibrators shall be provided in sufficient numbers, with standby units as required, to accomplish the results herein specified within 15 minutes after concrete of the prescribed consistency is placed in the forms. The vibrating head shall be kept from contact with the surfaces of the forms. Care shall be taken not to vibrate concrete excessively or to work it in any manner that causes segregation of its constituents.

3.04 CONCRETE FINISHING

A. Concrete finishes are specified in Section 03350 entitled "Concrete Finishes".

3.05 CURING AND PROTECTION

A. Curing is specified in Section 03370 entitled "Concrete Curing".

3.06 CONCRETE IN COLD WEATHER

A. Cold weather concreting procedures shall be in accordance with the requirements of ACI 306.

3.07 CONCRETE IN HOT WEATHER

A. Hot weather concreting procedures shall conform to the requirement of ACI 305.

3.08 PLACING CONCRETE UNDERWATER (TREMIE CONCRETE)

A. Placing concrete underwater will be permitted only when shown on the Drawings. Concrete deposited under water shall be carefully placed in a compacted mass in final position by means of a tremie, a closed bottom dump bucket or other approved method. Care must be exercised to maintain still water at the point of deposit. Concrete shall not be placed in running water. The consistency of the concrete shall be regulated to prevent segregation of materials. The method of depositing concrete shall be regulated such that the concrete enters the mass of the previously place concrete from within, displacing water with a minimum disturbance to the surface of the concrete.

B. Tremie shall consist of a tube having a diameter of not less than 10 inches and constructed in sections having flanged couplings fitted with gaskets. The tremie shall be supported to permit free movement of the discharge and over the entire top surface of the work and shall permit rapid lowering when necessary to choke off or retard the flow. The discharge end shall be entirely sealed at all times and the tremie tube kept full to the bottom of the hopper. When a batch is dumped into the hopper, the tremie shall be slightly raised, but not out of the concrete at the bottom, until the batch discharges to the bottom of the hopper. The flow shall then be stopped by lowering the tremie. The flow shall be continuous until the placement has been completed.

3.09 PLACING CONCRETE UNDER PRESSURE (PUMPING)

A. Where concrete is conveyed and placed by mechanically applied pressure, the equipment shall have the capacity for the operation. The operation of the pump shall be such that a continuous stream of concrete without air pockets is produced. To obtain the least line resistance, the layout of the pipeline system shall contain a minimum number of bends with no change in pipe size. If two sizes of pipe must be used, the smaller diameter should be used at the pump end and the larger at the discharge end. When pumping is completed, the concrete remaining in the pipelines, if it is to be used, shall be ejected in such a manner that there will be no contamination of the concrete or separation of the ingredients.

B. No aluminum parts shall be in contact with the concrete during the entire placing of concrete under pressure at any time.

C. Prior to placing concrete under pressure, the Contractor shall submit the concrete mix design together with test results from a recognized testing laboratory proving the proposed mix meets all requirements. In addition, at the Contractor's option, an actual pumping test under field conditions may be performed prior to use of the accepted mix. This test requires a duplication of anticipated site conditions from beginning to end. The batching and truck mixing shall be the same as will be used; the same pump and operator shall be

present and the pipe and pipe layouts will reflect the maximum height and distance contemplated.

D. If the pumped concrete does not produce satisfactory end results, the Contractor shall discontinue the Pumping operation and proceed with the placing of concrete using conventional methods.

E. The pumping equipment must have two cylinders and be designed to operate with one cylinder only in case the other one is not functioning. In lieu of this requirement, the Contractor may have a standby pump on the site during pumping.

F. The minimum diameter of the hose (conduits) shall be four inches.

G. Pumping equipment and hoses (conduits) that are not functioning properly shall be replaced.

3.10 ORDER OF PLACING CONCRETE

A. In order to minimize the effects of shrinkage, the concrete shall be placed in units as bounded by construction joints shown on the Drawings and maximum lengths as indicated on Drawings. The placing of units shall be done by placing alternate units in a manner such that each unit placed shall be have cured at least seven days before the contiguous unit or units are placed, except that the corner sections of vertical walls shall not be placed until the two adjacent wall panels have cured at least 14 days.

B. The surface of the concrete shall be level whenever a run of concrete is stopped.

3.11 DEFECTIVE CONCRETE

A. As soon as forms are removed, all exposed surfaces shall be carefully examined and any irregularities shall be immediately rubbed or ground in a satisfactory manner in order to secure a smooth, uniform, and continuous surface. Plastering or coating of surfaces to be smoothed will not be permitted. No repairs shall be made until reviewed by the Engineer. In no case will extensive patching of honeycombed concrete be permitted. Concrete containing minor voids, holes, honeycombing, or similar depression defects shall have them repaired as specified herein. Concrete containing extensive voids, holes, honeycombing, or similar depression defects, shall be completely removed and replaced. All repairs and replacements herein specified shall be promptly executed by the Contractor at its own expense.

B. Defective surfaces to be repaired as specified in Article 3.11, Paragraph A of this Section, shall be cut back from trueline a minimum depth of 1/2 inch over the entire area. Feathered edges will not be permitted. Where chipping or cutting tools are not required in order to deepen the area properly, the surface shall be prepared for bonding by the removal of all laitance or soft material, and not less than 1/32 inch depth of the surface film from all hard portions. The material used for repair proposed shall be approved by the Engineer.

C. Holes left by tie rod cones shall be repaired in an acceptable manner with dry-packed cement grout or premixed patching material as accepted by the Engineer.

D. All repairs shall be built up and shaped in such a manner that the completed work will conform to the requirements of Article 3.04 or 3.05 of this Section, as applicable, using acceptable methods which will not disturb the bond, cause sagging, or cause horizontal fractures. Surfaces of said repairs shall receive the same kind and amount of curing treatment as required for the concrete in the repaired section.

E. Prior to backfilling, all cracks that may have developed shall be "vee'd" and filled with sealant conforming to the requirements of Section 07920 entitled, "Sealants and Caulking". This repair method shall be done on the faces of members in contact with fill.

3.12 CARE AND REPAIR OF CONCRETE

A. The Contractor shall protect all concrete against injury or damage from excessive heat, lack of moisture, overstress, or any other cause until final acceptance by the City. Particular care shall be taken to prevent the drying of concrete and to avoid roughening or otherwise damaging the surface. Any concrete found to be damaged, or which may have been originally defective, or which becomes defective at any time prior to the final acceptance of the completed work, or which departs from the established line or grade, or which, for any other reason, does not conform to the requirements of the Contract Documents, shall be satisfactorily repaired or removed and replaced with acceptable concrete at the Contractor's expense. This stipulation includes concrete experiencing cracking due to drying or thermal shrinkage of the concrete. Structural cracks shall be repaired using an epoxy injection system approved by the Engineer. Non-structural cracks shall be repaired using a hydrophilic resin pressure injected grout system approved by the Engineer, unless other means or repair are deemed necessary and approved by the Engineer.

3.13 CONCRETE SEALER

A. Contractor shall apply a sealer to the top surface of all finished concrete floor slabs and equipment pads which are to remain unpainted and not intended to be immersed unless stated otherwise. Sealer shall be as specified in Specification Section 03350 entitled “Concrete Finishes”.

- END OF SECTION -

SECTION 03315

GROUT

PART 1 – GENERAL

1.01 THE REQUIREMENT

A. The Contractor shall furnish all materials for grout in accordance with the provisions of this Section and shall form, mix place, cure, repair, finish, and do all other Work as required to produce finished grout, all in accordance with the requirements of the Contract Documents.

1.02 RELATED WORK SPECIFIED ELSEWHERE

A. Section 01300 - Submittals

B. Section 03300 - Cast in Place Concrete

1.03 REFERENCE SPECIFICATIONS, CODES, AND STANDARDS

A. Specifications, codes, and standards shall be as specified in Section 03300 entitled "Cast in Place Concrete," and as referred to herein.

B. Additional Commercial Standards

1. CRD C 621Corps of Engineers Specification for Nonshrink Grout

1.04 SUBMITTALS

A. The Contractor shall submit certified test results verifying the compressive strength, shrinkage, and expansion requirements specified herein; and manufacturer's literature containing instructions and recommendations on the mixing, handling, placement and appropriate uses for each type of grout used in the work.

PART 2 – PRODUCTS

2.01 PREPACKAGED NON-SHRINK CEMENTITIOUS GROUT

A. Nonshrink grout shall be a prepackaged, inorganic, non gas liberating, nonmetallic, cement based grout requiring only the addition of water. Manufacturer's instructions shall be printed on each bag or other container in which the materials are packaged. The specific formulation for each class of nonshrink grout specified herein shall be that recommended by the manufacturer for the particular application.

B. Nonshrink grouts shall have a minimum 28 day compressive strength of 5000 psi (ASTM C109, restrained), shall have no shrinkage (0.0 percent) and a maximum 4.0 percent expansion in the plastic state when tested in accordance with ASTM C 827, and shall have no shrinkage (0.0 percent) and a maximum of 0.2 percent expansion in the hardened state when tested in accordance with CRD C 621.

C. Cement based grout shall be Five Star Grout as manufactured by Five Star Products, Inc., Fairfield, Connecticut, or equal.

D. Cementitious non-shrink grout shall be used at locations where there are no dynamic loads, the grout will not come in contact with wastewater or wastewater gases, and where non-shrink grout is identified on the Drawings. Applications include, but are not limited to, structural steel column base plates, gate frames and guides, and precast concrete to cast-in-place concrete joints.

2.02 PREPACKAGED NON-SHRINK EPOXY GROUT

A. Epoxy-based non-shrink grout shall be a three component, 100 percent solids, solvent-free system designed for machinery grouting. Applications include, but are not limited to, anchoring, pump and motor bases, and any other equipment imparting dynamic loads to the support system.

B. When non-shrink grout is identified on the Drawings in submerged (water or wastewater) or under wastewater gas environment, epoxy-based non-shrink grouts shall be used.

C. The epoxy grout shall be delivered to site as prepackaged, three-component systems composing of the resin, hardener, and specially blended aggregates. The components shall be stored as recommended by the manufacturer until use.

D. Non-shrink epoxy grout shall be Five Star DP Epoxy Grout by Five Star Products, Inc., Fairfield, Connecticut, or equal.

2.03 CEMENT GROUT

A. Cement grout shall be composed of Portland cement and sand in the proportion specified in the Contract Documents and the minimum amount of water necessary to obtain the desired consistency. If no proportion is indicated, cement grout shall consist of one part Portland cement to three parts sand. Water amount shall be as required to achieve desired consistency without compromising strength requirements. White Portland cement shall be mixed with Portland cement as required to match color of adjacent concrete.

B. The minimum compressive strength at 28 days shall be 4000 psi.

C. For beds thicker than 1-1/2 inch and/or where free passage of grout will not be obstructed by coarse aggregate, 1-1/2 parts of coarse aggregate having a top size of 3/8 inch should be added. This stipulation does not apply for grout being swept in by a mechanism. These applications shall use a plain cement grout without coarse aggregate regardless of bed thickness.

D. Sand shall conform to the requirements of ASTM C144.

2.04 DOWEL / ANCHOR BOLT ADHESIVE SYSTEM

A. When rebar or anchor bolts are specified to be drilled in and grouted on the Drawings, an adhesive system specified in Section 03200 entitled "Concrete Reinforcement" shall be used for dowels and an adhesive system specified in Section 05050 entitled "Metal Fastening" shall be used for anchor bolts.

2.05 CURING MATERIALS

A. Curing materials shall be as recommended by the manufacturer.

2.06 CONSISTENCY

A. The consistency of grouts shall be that necessary to completely fill the space to be grouted for the particular application. Dry pack consistency is such that the grout is plastic and moldable but will not flow. Where "dry pack" is called for in the Contract Documents, it shall mean a grout of the above described consistency; the type of grout to be used shall be as specified herein for the particular application.

2.07 MEASUREMENT OF INGREDIENTS

A. Prepackaged grouts shall have ingredients measured by means recommended by the manufacturer.

PART 3 – EXECUTION

3.01 GENERAL

A. All curing, and protection of cement grout shall be as specified in Section 03370 entitled "Concrete Curing" (Methods 1 and 2); or as recommended by manufacturer. The finish of the grout surface shall match that of the adjacent concrete.

B. All mixing, surface preparation, handling, placing, consolidation, and other means of execution for prepackaged grouts shall be done according to the instructions and recommendations of the manufacturer.

3.02 CONSOLIDATION

A. Grout shall be placed in such a manner, for the consistency necessary for each application, so as to assure that the space to be grouted is completely filled.

- END OF SECTION -

SECTION 03350

CONCRETE FINISHES

PART 1 – GENERAL

1.01 THE REQUIREMENT

A. The Contractor shall furnish all materials, labor, and equipment required to provide finishes of all concrete surfaces specified herein and shown on the Drawings.

1.02 RELATED WORK SPECIFIED ELSEWHERE

A. Section 03100 - Concrete Formwork

B. Section 03300 - Cast-in-Place Concrete

C. Section 03400 - Precast Concrete, General

D. Section 03315 - Grout

1.03 REFERENCE SPECIFICATIONS, CODES AND STANDARDS

A. Without limiting the generality of the other requirements of the specifications, all work herein shall conform to the applicable requirements of the following documents. All referenced specifications, codes, and standards refer to the most current issue available at the time of Bid.

1. ACI 301 -Specifications for Structural Concrete for Buildings

2. ACI 318 - Building Code Requirements for Reinforced Concrete

1.04 SUBMITTALS

A. Submit the following in accordance with Section 01300 entitled "Submittals".

1. Manufacturer's literature on all products specified herein.

PART 2 – PRODUCTS

2.01 CONCRETE FLOOR SEALER

A. Floor sealer shall be Diamond Clear VOX or Super Diamond VOX by the Euclid Chemical Company, MasterKure CC 300 SB by BASF Master Builder Solutions.

2.02 CONCRETE LIQUID DENSIFIER AND SEALANT

A. Concrete liquid densifier and sealant shall be a high performance, deeply penetrating concrete densifier and sealant. Product shall be odorless, colorless, VOC-compliant, non-yellowing siliconate based solution designed to harden, dustproof and protect concrete

floors subjected to heavy vehicular traffic and to resist black rubber tire marks on concrete surfaces. The product must contain a minimum solids content of 20% of which 50% is siliconate. Acceptable products are Diamond Hard by the Euclid Chemical Company, Seal Hard by L&M Construction Chemicals and MasterKure HD 210 by BASF Master Builder Solutions.

2.03 NON-METALLIC FLOOR HARDENER

A. The specified non-metallic mineral aggregate hardener shall be formulated, processed, and packaged under stringent quality control at the manufacturer's owned and controlled factory. The hardener shall be a factory-blended mixture of specifically processed graded mineral aggregate, selected Portland cement, and necessary plasticizing agents. Acceptable products shall be "Surflex" by the Euclid Chemical Company, "Harcol" by Sonneborn, "Maximent" by BASF, and "Mastercon" by BASF.

2.04 NON-OXIDIZING HEAVY DUTY METALLIC FLOOR HARDENER

A. Non-oxidizing heavy duty metallic floor hardener shall be formulated, processed, and packaged under stringent quality control at the manufacturer's owned and controlled factory. The hardener shall be a mixture of specifically processed non-rusting aggregate, selected Portland cement, and necessary plasticizing agents. Product shall be "Diamond-Plate" by the Euclid Chemical Company, or Masterplate by BASF Construction Chemicals.

2.05 NON-SLIP FLOORING ADDITIVE

A. Non-slip flooring additives for slip resistant floors shall be non-metallic. Non-slip flooring additives shall be Frictex NS by BASF Construction Chemicals, A-H Alox by Anti-Hydro, or Euco Grip by the Euclid Chemical Company.

PART 3 – EXECUTION

3.01 FINISHES ON FORMED CONCRETE SURFACES

A. After removal of forms, the finishes described below shall be applied in accordance with Article 3.05 of this Section entitled "Concrete Finish Schedule". Unless the finish schedule specifies otherwise, all surfaces shall receive at least a Type I finish. The Engineer shall be the sole judge of acceptability of all concrete finish work.

1. Type I - Rough: All fins, burrs, offsets, marks and all other projections left by the forms shall be removed. Projections, depressions, etc. below finished grade required to be removed will only be those greater than ¼-inch. All holes left by removal of ends of ties, and all other holes, depressions, bugholes, air/blow holes or voids shall be filled solid with cement grout after first being thoroughly wetted and then struck off flush. The only holes below grade to be filled will be tie holes and any other holes larger than ¼-inch in any dimension. Honeycombs shall be chipped back to solid concrete and repaired as directed by the Engineer. All holes shall be filled with tools, such as sponge floats and trowels, that will permit packing the hole solidly with cement grout. Cement grout shall consist of one part cement to three parts sand, epoxy bonding agent (for tie holes only) and the amount of mixing water shall be as

little as consistent with the requirements of handling and placing. Color of cement grout shall match the adjacent wall surface. .

2. Type II - Grout Cleaned: Where this finish is required, it shall be applied after completion of Type I finish. After the concrete has been predampened, a slurry consisting of one part cement (including an appropriate quantity of white cement in order to produce a color matching the surrounding concrete) and 1-1/2 parts sand passing the No. 16 sieve, by damp loose volume, shall be spread over the surface with clean burlap pads or sponge rubber floats. Mix proportions shall be submitted to the Engineer after a sample of the work is established and accepted. Any surplus shall be removed by scraping and then rubbing with clean burlap. The finish shall be kept damp for at least 36 hours after application.

3. Type III - Smooth Rubbed: Where this finish is required, it shall be applied after the completion of the Type II finish. No rubbing shall be done before the concrete is thoroughly hardened and the mortar used for patching is firmly set. A smooth, uniform surface shall be obtained by wetting the surface and rubbing it with a carborundum stone to eliminate irregularities. Unless the nature of the irregularities require it, the general surface of the concrete shall not be cut into. Corners and edges shall be slightly rounded by the use of the carborundum stone. Brush finishing or painting with grout or neat cement will not be permitted. A 100 square foot example shall be established at the beginning of the project to establish acceptability.

3.02 SLAB AND FLOOR FINISHES

A. The finishes described below shall be applied to floors, slabs, flow channels and top of walls in accordance with Article 3.05 of this Section entitled "Concrete Finish Schedule". The Engineer shall be the sole judge of acceptability of all such finish work.

1. Type "A" - Screeded: This finish shall be obtained by placing screeds at frequent intervals and striking off to the surface elevation required. When a Type "F" finish is subsequently to be applied, the surface of the screeded concrete shall be roughened with a concrete rake to 1/2-inch minimum deep grooves prior to final set.

2. Type "B" - Wood Floated: This finish shall be obtained after completion of a Type "A" finish by working a previously screeded surface with a wood float until the desired texture is reached. Floating shall begin when the water sheen has disappeared and when the concrete has sufficiently hardened so that a person's foot leaves only a slight imprint. If wet spots occur, water shall be removed with a squeegee. Care shall be taken to prevent the formation of laitance and excess water on the finished surface. All edges shall be edged with an 1/8-inch tool as directed by the Engineer. The finished surface shall be true, even, and free from blemishes and other irregularities.

3. Type "C" - Cork Floated: This finish shall be similar to Type "B" but slightly smoother than that obtained with a wood float. It shall be obtained by power or band floating with cork floats.

4. Type "D" - Steel Troweled: This finish shall be obtained after completion of a Type "B" finish. When the concrete has hardened sufficiently to prevent excess fine material from working to the surface, the surface shall be compacted and smoothed with not

less than two thorough and complete steel troweling operations. In areas which are to receive a floor covering such as tile, resilient flooring, or carpeting, the applicable Specification Sections and Contract Drawings shall be reviewed for the required finishes and degree of flatness. In areas that are intermittently wet such as pump rooms, only one troweling operation is required to provide some trowel marks for slip resistance. All edges shall be edged with an 1/8-inch tool as directed by the Engineer. The finish shall be brought to a smooth, dense surface, free from defects and blemishes.

5. Type "E" - Broom or Belt: This finish shall provide the surface with a transverse scored texture by drawing a broom or burlap belt across the surface immediately after completion of a Type "B" finish. All edges shall be edged with an 1/8-inch tool as directed by the Engineer.

6. Type "F" - Swept in Grout Topping: This finish shall be applied after a completion of a Type "A" finish. The concrete surface shall be properly cleaned, washed, and coated with a mixture of water and Portland Cement. Cement grout in accordance with Section 03315 shall then be plowed and swept into neat conformance with the blades or arms of the apparatus by turning or rotating the previously positioned mechanical equipment. Special attention shall be paid to true grades, shapes and tolerances as specified by the manufacturer of the equipment. Before beginning this finish, the Contractor shall notify the Engineer and the equipment manufacturer of the details of the operation and obtain approval and recommendations of the equipment manufacturer.

7. Type "G" - Hardened Finish: This finish shall be applied after completion of a Type “B” or Type “C” finish and prior to application of a Type “D” finish. Hardeners shall be applied in strict accordance with the manufacturer’s requirements. Hardeners shall be applied using a mechanical spreader. The hardener shall be applied in two shakes with the first shake comprising of 2/3 of the total amount. Type “D” finish shall be applied following completion of application of hardener.

   a. Non-metallic floor hardener shall be applied where specifically required on the Contract Drawings at the rate of 1.0 pounds/ft2.

   b. Non-oxidizing heavy duty metallic floor hardener shall be applied at the loading docks and where specifically required on the Contract Drawings or specified herein at the rate of 1.5 pounds/ft2.

8. Type "H" - Non-Slip Finish: This finish shall be provided by applying a non-slip flooring additive concurrently with the application of a Type “D” finish and/or installation of floor sealants. Application procedure shall be in accordance with manufacturer’s instructions. Finish shall be applied where specifically required on the Contract Drawings or specified herein.

9. Type "J" - Raked Finish: This finish shall be provided by raking the surface as soon as the condition of the concrete permits by making depressions of +/-1/4 inch.

3.03 CONCRETE SEALERS

A. Concrete sealers shall be applied where specifically required on the Contract Drawings or specified herein.

B. Sealers shall be applied after installation of all equipment, piping, etc. and after completion of any other related construction activities. Application of sealers shall be in strict accordance with manufacturer's requirements.

C. Sealers shall be applied to all floor slabs not painted and not intended to be immersed.

D. Floor slabs subjected to vehicular traffic shall be sealed with the concrete liquid densifier and sealer.

E. All other floor slabs to receive sealer shall be sealed with concrete floor sealer.

3.04 FINISHES ON EQUIPMENT PADS

A. Formed surfaces of equipment pads shall receive a Type III finish.

B. Top surfaces of equipment pads, except those surfaces subsequently required to receive non-shrink grout and support equipment bases, shall receive a Type "D" finish, unless otherwise noted. Surfaces which will later receive grout shall, before the concrete takes its final set, be made rough by removing the sand and cement that accumulates on the top to the extent that the aggregate will be exposed with irregular indentations in the surface up to 1/2 inch deep.

3.05 CONCRETE FINISH SCHEDULE

Item	Type of Finish
Concrete surfaces indicated to receive textured coating	I
Inner face of walls of tanks, flow channels, wet wells, perimeter walls, and miscellaneous concrete structures:	
From 3 feet below water surface to bottom of wall	I*
From top of wall to 3 feet below water surface	II*
Exterior concrete walls below grade	I
Exterior exposed concrete walls, ceilings, beams, manholes, hand holes, miscellaneous structures and columns (including top of wall) to one foot below grade. All other exposed concrete surfaces not specified elsewhere	II
All interior exposed concrete vertical surfaces in buildings	III
Interior exposed ceiling, including beams	III
Floors of process equipment tanks or basins, and slabs to receive roofing material or waterproof membranes	B
All interior finish floors of buildings and structures and walking surfaces which will be continuously or intermittently wet	D

Item	Type of Finish
All interior finish floors of buildings and structures which are not continuously or intermittently wet	D
Floors to receive tile, resilient flooring, or carpeting	D
Concrete in flow channels	D
Exterior concrete sidewalks, steps, ramps, decks, slabs on grade and landings exposed to weather	E
Floors of process equipment tanks indicated on Drawings to receive grout topping	F
Garage and storage area floors	G
Precast concrete form panels, hollow core planks, double tees	J

** Finish shall be acceptable to the coating applicator and manufacturer. See Section 09900 entitled "Painting"*

- END OF SECTION -

SECTION 03370

CONCRETE CURING

PART 1 – GENERAL

1.01 THE REQUIREMENT

A. The Contractor shall protect all freshly deposited concrete from premature drying and excessively hot or cold temperatures, and maintain with minimal moisture loss at a relatively constant temperature for the period of time necessary for the hydration of the cement and proper hardening of the concrete in accordance with requirements specified herein.

1.02 RELATED WORK SPECIFIED ELSEWHERE

A. Section 03100 - Concrete Framework

B. Section 03300 - Cast-in-Place Concrete

C. Section 03315 - Grout

D. Section 03350 - Concrete Finishes

1.03 SUBMITTALS

A. In accordance with the procedures and requirements set forth in the Section entitled "Submittals", the contractor shall submit the following:

1. Proposed procedures for protection of concrete under wet weather placement conditions.

2. Proposed normal procedures for protection and curing of concrete.

3. Proposed special procedures for protection and curing of concrete under hot and cold weather conditions.

4. Proposed method of measuring concrete surface temperature changes.

5. Manufacturer's literature and material certification for proposed curing compounds.

1.04 REFERENCE SPECIFICATIONS, CODES AND STANDARDS

A. Without limiting the generality of other requirements of these specifications all work hereunder shall conform to the applicable requirements of the referenced portions of the following documents, to the extent that the requirements therein are not in conflict with the provisions of this Section.

1. ACI 301 Specifications for Structural Concrete for buildings

2. ACI 304 Guide for Measuring, Mixing, Transporting, and Placing Concrete

3. ACI 305 Hot Weather Concreting

4. ACI 306 Cold Weather Concreting

5. ACI 308 Standard Practice for Curing Concrete

6. ASTM C171 Specifications for Sheet Materials for Curing Concrete

7. ASTM C309 Specification for Liquid Membrane - Forming Compounds for Curing Concrete

8. ASTM C1315 Standard Specification for Liquid Membrane-Forming Compounds Having Special Properties for Curing and Sealing Concrete

1.05 QUALITY ASSURANCE

A. Curing compound shall not be used on any surface where concrete, coatings, or other material will be bonded unless the manufacturer certifies that the curing compound will not prevent bond or indicates measures to be taken to completely remove the curing compound from areas to receive bonded applications, and specifically approved by the Engineer.

B. Care shall be taken to ensure that curing compounds are compatible with all finish concrete castings.

C. Curing compounds shall not be used on surfaces exposed to water in potable water storage tanks and treatment plants unless curing compound is certified in accordance with ANSI/NSF Standard 61.

PART 2 – PRODUCTS

2.01 LIQUID MEMBRANE-FORMING CURING COMPOUND

A. Clear curing and sealing compound shall be a clear styrene acrylate type complying with ASTM C 1315, Type 1, Class A with a minimum solids content of 30%. Moisture loss shall not be greater than 0.40 kg/m2 when applied at 300 sq.ft./gal. Manufacturer's certification is required. Acceptable products are Super Diamond Clear VOX by the Euclid Chemical Company, MasteKure CC 300 SB by BASF Master Builder Solutions, and Cure & Seal 30 Plus by Symons Corporation.

B. Where specifically approved by Engineer, on slabs to receive subsequent applied finishes, compound shall conform to ASTM C 309. Acceptable products are "Kurez DR VOX" or "Kurez W VOX" by the Euclid Chemical Company. Install in strict accordance with manufacturer's requirements.

2.02 EVAPORATION REDUCER

A. Evaporation reducer shall be BASF, "MasterKure ER 50", or Euclid Chemical "Euco-Bar".

2.03 BURLAP MATS

A. Burlap mats shall conform to AASHTO M-182.

PART 3 – EXECUTION

3.01 PROTECTION AND CURING

A. All freshly placed concrete work shall be protected from the elements, flowing water and from defacement of any nature during construction operations.

B. As soon as the concrete has been placed and horizontal top surfaces have received their required finish, provision shall be made for maintaining the concrete in a moist condition for at least a 7-day period thereafter except for high early strength concrete, for which the period shall be at least the first three days after placement. Horizontal surfaces shall be kept covered, and intermittent, localized drying will not be permitted.

C. Walls that will be exposed on one side with either fluid or earth backfill on the opposite side shall be continuously wet cured for a minimum of five days. Use of a curing compound will not be acceptable for applications of this type.

D. After placing and finishing, use one or more of the following methods to preserve moisture in concrete:

1. Ponding or continuous fogging or sprinkling.

2. Application of mats or fabric kept continuously wet.

3. Continuous application of steam (under 150 degrees Fahrenheit).

4. Application of sheet materials conforming to ASTM C171.

5. If approved by the Engineer, application of a curing compound in accordance with Article 3.05. Apply the compound in accordance with the manufacturer's recommendation on after water sheen has disappeared from the concrete surface and after finishing operations. The rate of application shall not exceed 200 square feet per gallon. For rough surfaces, apply in two directions at right angles to each other.

E. Keep absorbent forms wet until they are removed. After form removal, cure concrete by one of the methods in paragraph D.

F. Any of the curing procedures used in Paragraph 3.01-D may be replaced by one of the other curing procedures listed in Paragraph 3.01-D after the concrete is one-day old. However, the concrete surface shall not be permitted to become dry at any time.

3.02 CURING CONCRETE UNDER COLD WEATHER CONDITIONS

A. Suitable means shall be provided for a minimum of 72 hours after placing concrete to maintain it at or above the minimum as placed temperatures specified in Article 3.02 herein.. During the 72-hour period, the concrete surface shall not be exposed to air more than 20°F above the minimum as placed temperatures.

B. Stripping time for forms and supports shall be increased as necessary to allow for retardation in concrete strength caused by colder temperatures. This retardation is magnified when using concrete made with blended cements or containing fly ash or ground granulated blast furnace slag. Therefore, curing times and stripping times shall be further increased as necessary when using these types of concrete.

C. The methods of protecting the concrete shall be approved by the Engineer and shall be such as will prevent local drying. Equipment and materials approved for this purpose shall be on the site in sufficient quantity before the work begins. The Contractor shall assist the Engineer by providing holes in the forms and the concrete in which thermometers can be placed to determine the adequacy of heating and protection. All such thermometers shall be furnished by the Contractor in quantity and type which the Engineer directs.

D. Curing procedures during cold weather conditions shall conform to the requirements of ACI 306.

3.03 CURING CONCRETE UNDER HOT WEATHER CONDITIONS

A. When air temperatures exceed 85°F, the Contractor shall take extra care in placing and finishing techniques to avoid formation of cold joints and plastic shrinkage cracking. If ordered by the Engineer, temporary sun shades and/or windbreakers shall be erected to guard against such developments, including generous use of wet burlap coverings and fog sprays to prevent drying out of the exposed concrete surfaces.

B. Immediately after screeding, horizontal surfaces shall receive an application of evaporation reducer. Apply in accordance with manufacturer's instructions. Final finish work shall begin as soon as the mix has stiffened sufficiently to support the workmen.

C. Curing and protection of the concrete shall begin immediately after completion of the finishing operation. Continuous moist-curing consisting of method 1 or 2 listed in paragraph 3.01D is mandatory for at least the first 24 hours. Method 2 may be used only if the finished surface is not marred or blemished during contact with the coverings.

D. At the end of the initial 24-hour period, curing and protection of the concrete shall continue for at least four (4) additional days using one of the methods listed in paragraph 3.01D.

E. Curing procedures during hot weather conditions shall conform to the requirements of ACI 305.

3.04 USE OF CURING COMPOUND

A. Curing compound shall be used only where specifically approved by the Engineer. Curing compound shall not be used on surfaces to receive subsequent coatings. Curing compound shall never be used for curing exposed walls with fluid or earth backfill on the opposite side. A continuous wet cure for a minimum of five days is required for these applications. Curing compound shall not be used on surfaces exposed to water in potable water storage tanks and treatment plants unless curing compound is certified in accordance with ANSI/NSF Standard 61.

B. When permitted, the curing compound shall maintain the concrete in a moist condition for the required time period, and the subsequent appearance of the concrete surface shall not be affected.

C. The compound shall be applied in accordance with the manufacturer's recommendations after water sheen has disappeared from the concrete surface and after finishing operations. The rate of application shall not exceed 300 square feet per gallon. For rough surfaces, apply in two directions at right angles to each other.

3.05 EARLY TERMINATION OF CURING

A. Moisture retention measures may be terminated earlier than the specified times only when at least one of the following conditions is met:

1. The strength of the concrete reaches 85 percent of the specified 28-day compressive strength in laboratory-cured cylinders representative of the concrete in place, and the temperature of the in-place concrete has been constantly maintained at 50 degrees Fahrenheit or higher.

2. The strength of concrete reaches the specified 28-day compressive strength as determined by accepted nondestructive methods or laboratory-cured cylinder test results.

- END OF SECTION -

SECTION 03400

PRECAST CONCRETE, GENERAL

PART 1 – GENERAL

1.01 REQUIREMENTS

A. The Contractor shall construct all precast concrete items as required in the Contract Documents, including all appurtenances necessary to make a complete installation.

1.02 RELATED WORK SPECIFIED ELSEWHERE

A. Section 03200 – Concrete Reinforcement

B. Section 03230 – Stressing Tendons

C. Section 03300 – Cast-in-Place Concrete

D. Section 03350 – Concrete Finishes

E. Section 03370 – Concrete Curing

F. Section 03315 – Grout

G. Section 05500 – Metal Fabrications

1.03 REFERENCE SPECIFICATIONS, CODES AND STANDARDS

A. Without limiting the generality of other requirements of these Specifications, all work specified herein shall conform to the applicable requirements of the following documents. All referenced specifications, codes, and standards refer to the most current issue available at the end of the Bid.

1. Florida Building Code

2. ACI 318-Building Code Requirements for Reinforced Concrete

3. PCI Standard MNL-116 - Manual for Quality Control for Plants and Production of Precast and Prestressed Concrete Products

4. PCI Design Handbook

1.04 SUBMITTALS

A. The Contractor shall submit the following for review in accordance with Section 01300 entitled "Submittals".

1. Shop drawings for all precast concrete items showing all dimensions, locations, and type of lifting inserts, and details of reinforcement and joints.

2. A list of the design criteria used by the manufacturer for all manufactured, precast items.

3. Design calculations, showing at least the design loads and stresses on the item, shall be submitted. Calculations shall be signed and sealed by a Professional Engineer registered in the State of Florida.

4. Certified reports for all lifting inserts, indicating allowable design loads.

5. Information on lifting and erection procedures.

1.05 QUALITY ASSURANCE

A. All manufactured precast concrete units shall be produced by an experienced manufacturer regularly engaged in the production of such items. All manufactured precast concrete and site-cast units shall be free of defects, checks, and cracks. Care shall be taken in the mixing of materials, casting, curing and shipping to avoid any of the above. The Engineer may elect to examine the units at the casting yard or upon arrival of the same at the site. The Engineer shall have the option of rejecting any or all of the precast work if it does not meet with the requirements specified herein or on the Drawings. All rejected work shall be replaced at no additional cost to the City.

B. Manufacturer qualifications:

1. The precast concrete manufacturing plant shall be certified by the Prestressed Concrete Institute, Plant Certification Program, prior to the start of production. Certification is only required for plants providing prestressed structural members such as hollow core planks, double T members, etc.

2. In lieu of such certification, the manufacturer shall, at his expense, meet the following requirements:

a. Retain independent testing or consulting firm approved by the architect/engineer and/or City.

b. The basis of inspection shall be the Prestressed Concrete Institute Manual for Quality Control for Plants and Production of Precast and Prestressed Concrete Products, MNL-116.

c. This firm shall inspect the precast plant at two-week intervals during production and issue a report, certified by a registered engineer verifying that materials, methods, products and quality control meet all the requirements of the specifications, drawings, and MNL-116. If the report indicates to the contrary, the engineer, at the precaster's expense, will inspect and may reject any or all products produced during the period of non-compliance with the above requirements.

C. Plant production and engineering must be under direct supervision and control of an Engineer who possesses a minimum of five (5) years' experience in precast concrete work.

PART 2 – PRODUCTS

2.01 CONCRETE

A. Concrete materials including Portland cement, aggregates, water, and admixtures shall conform to Section 03300 entitled "Cast-in-Place Concrete".

B. For prestressed concrete items, minimum compressive strength of concrete at 28 days shall be 5,000 psi unless otherwise specified. Minimum compressive strength of concrete at transfer of prestressing force shall be 3,500 psi.

C. For non-prestressed concrete items, minimum compressive strength of concrete at 28 days shall be 4,000 psi unless otherwise specified.

2.02 GROUT

A. Grout for joints between panels shall be a non-shrink, non-metallic grout in conformance with Section 03315 entitled "Grout".

B. Minimum compressive strength of grout at 7 days shall be 3,000 psi.

2.03 REINFORCING STEEL

A. Reinforcing steel used for precast concrete construction shall conform to Section 03200 entitled "Concrete Reinforcement'.

2.04 PRESTRESSING STRANDS

A. Prestressing strands shall be 7-wire, stress-relieved, high-strength strands Grade 250K or 270K.

2.05 STEEL INSERTS

A. Steel inserts shall be in accordance with Section 05500 entitled "Metal Fabrications".

B. All steel inserts protruding from or occurring at the surface of precast units shall be galvanized in accordance with Section 05035 entitled "Galvanizing".

2.06 WELDING

A. Welding shall conform to Section 05500 entitled "Metal Fabrications".

2.07 BEARING PADS

A. Plastic bearing pads shall be multi-monomer plastic strips which are non-leaching and support construction loads with no visible overall expansion, manufactured specifically for the purpose of bearing precast concrete.

PART 3 – EXECUTION

3.01 FABRICATION AND CASTING

A. All precast members shall be fabricated and cast to the shapes, dimensions and lengths shown on the Drawings and in compliance with PCI MNL-116. Precast members shall be straight, true and free from dimensional distortions, except for camber and tolerances permitted later in this clause. All integral appurtenances, reinforcing, openings, etc., shall be accurately located and secured in position with the form work system. Form materials shall be steel and the systems free form leakage during the casting operation.

B. All cover of reinforcing shall be the same as detailed on the Drawings.

C. Because of the critical nature of the bond development length in prestressed concrete panel construction, if the transfer of stress is by burning of the fully tensioned strands at the ends of the member, each strand shall first be burned at the ends of the bed and then at each end of each member before proceeding to the next strand in the burning pattern.

D. The Contractor shall coordinate the communication of all necessary information concerning openings, sleeves, or inserts to the manufacturer of the precast members.

E. Concrete shall be finished in accordance with Section 03350 entitled "Concrete Finishes". All recesses due to cut tendons shall be grouted.

F. Curing of precast members shall be in accordance with Section 03370 entitled "Concrete Curing".

G. The manufacturer shall provide lifting inserts.

3.02 HANDLING, TRANSPORTING AND STORING

A. Precast members shall not be transported away from the casting yard until the concrete has reached the minimum required 28 day compressive strength and a period of at least five (5) days has elapsed since casting, unless otherwise permitted by the Engineer.

B. No precast member shall be transported from the plant to the job site prior to approval of that member by the plant inspector. This approval will be stamped on the member by the plant inspector.

C. During handling, transporting, and storing, precast concrete members shall be lifted and supported only at the lifting or supporting points as indicated on the shop drawings.

D. All precast members shall be stored on solid, unyielding, storage blocks in a manner to prevent torsion, objectionable bending, and contact with the ground.

E. Precast concrete members shall not be used as storage areas for other materials or equipment.

F. Precast members damaged while being handled or transported will be rejected or shall be repaired in a manner approved by the Engineer.

3.03 ERECTION

A. Erection shall be carried out by the manufacturer or under his supervision using labor, equipment, tools and materials required for proper execution of the work.

B. Contractor shall prepare all bearing surfaces to a true and level line prior to erection. All supports of the precast members shall be accurately located and of required size and bearing materials.

C. Installation of the precast members shall be made by leveling the top surface of the assembled units keeping the units tight and at right angles to the bearing surface.

D. Connections which require welding shall be properly made in accordance with Section 05050 entitled "Metal Fastening".

E. Grouting between adjacent precast members and along the edges of the assembled precast members shall be accomplished as indicated on the drawings, care being taken to solidly pack such spaces and to prevent leakage or droppings of grout through the assembled precast members. Any grout which seeps through the precast members shall be removed before it hardens.

F. In no case shall concentrated construction loads, or construction loads exceeding the design loads, be placed on the precast members. In no case shall loads be placed on the precast members prior to the welding operations associated with erection, and prior to placing of topping (if required).

G. No Contractor, Subcontractor or any of his employees shall arbitrarily cut, drill, punch or otherwise tamper with the precast members.

H. Precast members damaged while being erected will be rejected or shall be repaired in a manner approved by the Engineer.

- END OF SECTION -

SECTION 03415

PRECAST PRESTRESSED CONCRETE HOLLOW CORE PLANKS

PART 1 – GENERAL

1.01 THE REQUIREMENT

A. The Contractor shall furnish all materials, labor, equipment, tools, etc., required for the design, fabrication, delivery and erection of precast, prestressed concrete hollow core planks in accordance with the Drawings and as specified herein.

1.02 RELATED WORK SPECIFIED ELSEWHERE

A. Section 03300 – Cast In Place Concrete

B. Section 03400 – Precast Concrete, General

1.03 REFERENCED SPECIFICATIONS, CODES, AND STANDARDS

A. Without limiting the generality of other requirements of these Specifications, all Work specified herein shall conform to or exceed the requirements of the Building Code and the applicable requirements of the following documents to the extent that the provisions of such documents are not in conflict with the requirements of this Section.

B. Commercial Standards:

1. ACI 318 Building Code Requirements for Reinforced Concrete.
2. ACI 423 Recommendations for Concrete Members Prestressed with Unbonded Tendons
3. ASTM A 416 Specification for Steel Strand, Uncoated Seven Wire Stress Relieved for Prestressed Concrete.
4. ASTM A 615 Specification for Deformed Billet Steel Bars for Concrete Reinforcement.
5. ASTM C 33 Specification for Concrete Aggregates.
6. ASTM C 39 Test method for Compressive Strength of Cylindrical Concrete Specimens.

1.04 MANUFACTURERS

A. The planks shall be hollow-core precast-prestressed concrete planks with concrete topping as shown on drawings, manufactured by the following, or equal:

1. Coreslab Structures - Orlando, Florida

B. The manufacturer shall be responsible for the design and fabrication of the planks.

1.05 SUBMITTALS

A. Submittals shall comply with Section 03400, Precast Concrete-General.

B. In addition to the requirements of Section 03400, submittals shall include:

1. Calculations shall indicate compliance with the Drawings and specified standards and shall include camber calculations.

2. Shop drawings shall cover each type of precast, prestressed concrete unit to be used, and shall show the exact profile of each unit, steel reinforcement, and other pertinent details, including the standard manufacturer's loading chart data for a specific span, as well as resisting moment, crowns, shore loads, and the manufacturer's specifications.

3. After review and acceptance by the Engineer, the Contractor shall submit two copies of the submittal to the Building Department for their review and approval.

1.06 QUALITY ASSURANCE

A. Quality assurance shall comply with Section 03400, Precast Concrete – General.

PART 2 – PRODUCTS

2.01 MATERIALS

A. Materials shall comply with Section 03400, Precast Concrete – General, except as stated below.

B. Minimum compressive strength of concrete at transfer of prestressing force shall be 3,000 psi.

PART 3 – EXECUTION

3.01 DESIGN CRITERIA

A. All units shall be designed in accordance with the applicable provisions of ACI 318 and PCI Design Handbook, prestressed to sustain the superimposed dead, live, and wind loads indicated herein and on the Drawings. Design and subsequent fabrication shall provide for a camber in each unit to eliminate total dead load deflection.

B. Superimposed Roof Loads

1. Dead Loads - Uniform load shall be that resulting from weight of member and weights of insulation material, built-up roofing, ballast, and concrete topping, as shown on the Drawings. Concentrated load at crane rail hanger-supports (when applicable) shall be that resulting from contributing weight of crane rail and its support-assembly.

2. Live Loads - Uniform live load shall be 30 psf unless noted otherwise on the Drawings. Concentrated hoist loads shall consist of the rated capacity plus 33% impact loading and shall occur where crane rails are shown on the Drawings.

3. Wind Loads – Wind loads shall be per the Florida Building Code with an ultimate design wind speed of 180 MPH, Exposure Category C.

4. Other applicable loads per the Florida Building Code as indicated on the Drawings.

5. Units shall be capable of supporting the total superimposed loads indicated on the Drawings and specified herein. Provisions shall be made for any additional loads imposed on units by openings, or by supporting the work of other trades. In addition, the units shall be adequately reinforced to resist all handling stresses.

3.02 FABRICATION AND CASTING

A. All hollow core planks shall comply with Section 03400, Precast Concrete.

B. Hollow core plank dimensions shall comply with PCI Design Handbook and as indicated on the Drawings.

C. Curing of hollow core planks shall be equivalent to three days moist curing at 70°F.

D. Unless otherwise noted on the Drawings, permitted dimensional tolerances are as follows:

1. Length ..... ±1/2"

2. Width ..... ±1/4" Max.

3. Depth ..... ±1/4" Max.

4. Differential Camber Between Adjacent Units ..... 1/4" Max.

5. Horizontal Alignment ..... ±1/8" per 10' ±1/2" Max.

6. Location of openings, blockouts, anchors, plates and inserts ..... ±1/2" Max.

7. Square Ends ..... ±1/8" per 12" of Height

3.03 HANDLING, TRANSPORTING, AND STORING

A. Handling, transporting, and storing shall comply with Section 03400, Precast Concrete.

3.04 ERECTION

A. Erection shall comply with Section 03400, Precast Concrete.

B. All hollow core planks shall bear on bearing pads at each end.

1. All hollow core planks shall bear on plastic bearing pads at each end in accordance with Section 03400, Precast Concrete.

C. The top of all hollow core planks which receive concrete topping shall be cleaned of all contaminants and thoroughly wetted just prior to placing the topping.

- END OF SECTION -

SECTION 03480

PRECAST CONCRETE MANHOLES, HANDHOLES AND VAULTS

PART 1 – GENERAL

1.01 THE REQUIREMENT

A. The Contractor shall construct all precast concrete items as required in the Contract Documents, including all appurtenances necessary to make a complete installation.

1.02 RELATED WORK SPECIFIED ELSEWHERE

A. Section 03400 – Precast Concrete, General

1.03 QUALITY CONTROL

A. Without limiting the generality of other requirements of these specifications, all work specified herein shall conform to or exceed the requirements of the Florida Building Code (FBC) and the applicable requirements of the following documents to the extent that the provisions of such documents are not in conflict with the requirements of this section:

1. ASTM C478 Specification for Precast Reinforced Concrete Manhole Sections.
2. ACI 318 Building Code Requirements for Reinforced Concrete.

1.04 SUBMITTALS

A. The Contractor shall submit shop drawings in accordance with Specification Section 01300 – Submittals.

B. In addition to the items listed in Section 03400 – Precast Concrete, General, Shop Drawings shall include, but not be limited to:

1. Piping and conduit sheets
2. Complete layout and installation Drawings and schedules with clearly marked dimensions.

PART 2 – PRODUCTS

2.01 PRECAST CONCRETE MANHOLES, VAULTS, AND METER BOXES

A. Precast concrete manholes, vaults, and meter boxes shall conform to ASTM C478 except as modified herein, and shall be furnished with waterstops, sleeves and openings as noted on the Drawings. Reinforcement, if shown, shall be as shown on the Drawings. Tapered top sections shall be supplied where they are shown on the drawings, or where they are otherwise indicated to be necessary.

1. The design and manufacture of the sections shall be based on H-20 traffic loading.

2. Reinforcement shall conform to the requirements of the Section 03200 entitled "Concrete Reinforcement".

3. Minimum wall thickness shall be eight inches.

4. Cement shall be ASTM C150, Type II.

5. The date and name of manufacturer shall be marked inside each precast section.

6. Joints between manhole riser sections and at base slabs shall be groove type. Joints shall be sealed with two (2) individual self-sealing butyl rubber gaskets conforming to Federal Specification No. SS-5-00210. The gasket material shall be Kent Seal.

2.02 PIPE CONNECTIONS

A. The precast reinforced concrete manhole base shall be provided with circular openings at the locations and elevations for the proper connection of all pipes. The pipe connections shall be sealed with either a flexible manhole seal assembly or with mortar.

B. When a flexible manhole seal assembly is used to seal the pipe connection, the seal assembly shall be installed in accordance with the recommendations of the seal assembly manufacturer and shall conform to ASTM C923.

C. Flexible manhole seal assemblies shall permit at least an eight (8) degree deflection from the center line of the opening in any direction while maintaining a watertight connection.

D. The flexible manhole seal assembly shall be manufactured by Interpace Corp (Lock Joint Flexible Manhole Sleeve), National Pollution Control Systems, Inc. (Kor-N-Seal) or Press-Seal Gasket Corp. Manhole seal assemblies produced by other manufacturers will be considered for use by Engineer if submitted by the Contractor. Such manhole seal assemblies shall be acceptable only if the Shop Drawings are approved.

E. Short lengths of sewer pipe shall be installed entering and leaving the precast manhole base. These short lengths of pipe shall have a maximum length of 3'3". A concrete cradle shall be placed under the short length of pipe in accordance with the dimensions shown on the Drawings.

F. The concrete cradle is not necessary when a flexible manhole seal assembly is used.

2.03 MANHOLE LADDERS

A. Manhole ladders shall conform to Section 05515 – Ladders.

2.04 SITE-CAST ITEMS

A. Where removable concrete slabs are required by the drawings, they shall conform to the requirements set forth in Section 03300 entitled "Cast-in-Place Concrete." All thicknesses, reinforcing, and edge clearances shall be as shown on the drawings.

2.05 MORTAR

A. Mortar used between the sections of precast concrete manholes and vaults shall be as recommended by the section manufacturer, subject to the requirements of Division 4.

2.06 NON-SHRINK GROUT

A. Non-shrink grout shall be as specified in Section 03315 entitled "Grout".

PART 3 – EXECUTION

3.01 MANUFACTURED ITEMS

A. Precast Concrete Manhole Sections

1. Precast concrete manhole sections shall be set so as to be vertical, with sections in true alignment. The joint of the previously set section shall be covered with mortar and preformed joint sealant before the next section is placed. Before the mortar is set, joints shall be pointed, and exterior joints shall be thoroughly tooled so as to be slightly concave with a hard polished surface, free of cracks. Interior joints shall be tooled flush in a similar manner.

B. Miscellaneous Precast Vaults

1. All pull boxes, electrical manholes, vaults, meterboxes and other miscellaneous precast concrete boxes shall be installed in accordance with the manufacturer's recommendations, unless otherwise required by the drawings.

3.02 SITE CAST ITEMS

A. Where removable concrete slabs are required by the drawings, they shall be fabricated in accordance with Section 03300 entitled "Cast-in-Place Concrete".

B. Sealant, as specified in the Section 07920 entitled "Sealants and Caulking" shall be provided all around the panels.

- END OF SECTION -

DIVISION 4 – MASONRY

SECTION 04220

CONCRETE BLOCK MASONRY

PART 1 – GENERAL

1.01 THE REQUIREMENT

A. The Contractor shall construct all concrete masonry Work for the project, complete, including furnishing, fabricating, and placing of required reinforcing steel and the furnishing and setting of embedded items and all other appurtenant work, all in accordance with the requirements of the Contract Documents. The Contractor is responsible for coordinating the Work of this section with that of other trades.

B. All concrete block masonry that contains empty cells after installation shall be provided with a foamed-in-place insulation specified herein.

1.02 RELATED WORK SPECIFIED ELSEWHERE

A. Section 01300 - Submittals

B. Section 03300 - Cast in Place Concrete

1.03 REFERENCE SPECIFICATIONS, CODES, AND STANDARDS

A. Without limiting the generality of other requirements of the Specifications, all Work specified herein shall conform to or exceed the requirements of the Florida Building Code (FBC) and the applicable requirements of the following documents to the extent that the provisions of such documents are not in conflict with the requirements of this Section.

B. Products and their installation shall be in accordance with the following trade standards, as applicable:

1. Masonry Design Manual (MDM) shall mean the Masonry Design Manual published by the Masonry Industry Advancement Committee.

2. Manufacturer's published recommendations and specifications.

3. Federal Specifications (FS) as reference herein.

4. American Society for Testing and Materials (ASTM) Specifications, as referenced herein.

5. "Specifications for the Design and Construction of Load Bearing Concrete Masonry" published by the National Concrete Masonry Assoc., P.O. Box 9185, Rossylin Station, Arlington, VA.

6. "Building Code Requirements for Concrete Masonry Structures" (ACI 530/ASCE 5).

7. "Specifications for Masonry Structures" (ACI 530.1/ASCE 6).

1.04 CONTRACTOR SUBMITTALS

A. If requested, samples of concrete masonry unit (CMU) color ranges for each texture, as specified under products, shall be submitted to the Engineer for selection of color. Full size samples of the blocks selected shall be submitted for final review by the Engineer after color selection.

B. Submit compressive test reports of concrete block units satisfying the design strength requirements noted on the drawings and a notarized affidavit that the block units conform to the requirements of this Section.

C. Samples of mortar colors shall be submitted for color selection by the Engineer.

D. Submit manufacturer's product data and installer's detailed descriptive plans for installing the foamed-in-place wall insulation. The insulation shall be installed by installers certified by the manufacturer. Submit manufacturer certification of the installer contracted to perform the work.

E. Manufacturer's literature indicating mortar strength and composition.

F. Submit shop drawings for precast concrete lintels.

G. Mortar mix and water repellant admixture.

H. Reinforcements.

I. Ties.

J. Control joint filler (with manufacturer's literature).

K. Grout mix design - Quantities listed in the mix design shall be listed both by weight and by bulk volume for each component.

L. Accessories.

M. The Contractor through the manufacturer of the concrete masonry units shall furnish certificates, in triplicate, prior to delivery of any units to the jobsite. Each certificate shall be signed by an authorized officer of the manufacturing company and shall contain the name and address of the Contractor, the project location, the quantities, and date or dates of shipment and delivery to which the certificate applies. Units shall be certified for conformance with these Specifications.

N. Cold and/or hot weather construction procedures in accordance with ACI 530.1/ASCE 6 sections 2.3.2.2. and 2.3.2.3.

O. Cleaning procedures and cleaner for each masonry type.

P. <u>Shop Drawings, Reinforced Unit Masonry</u>: Submit shop drawings for fabrication, bending, and placement of reinforcing bars. Shop drawings shall comply with ACI 315 "Manual of Standard Practice for Detailing Reinforced Concrete Structures". Shop drawings shall include bar schedules, diagrams of bent bars, stirrup spacing, lateral ties and other arrangements and assemblies as required for fabrication and placement of reinforcing for unit masonry work.

1.05 QUALITY ASSURANCE

A. Before any masonry is laid, a sample panel shall be constructed for approval by the Engineer. The sample panel shall be 6 feet wide by 4 feet high, showing the CMU face, reinforcement, grouting, and type, color and tooling of mortar and bond. The approved wall sample panel shall remain in place for the duration of all masonry work, to serve as the standard of reference for all masonry. The sample panel shall be removed by the Contractor at the completion of the project.

B. The City reserves the right to test materials for compliance with these specifications. Sampling and testing will be done in accordance with ASTM standards by an independent testing agency employed by the City. Materials that fail to meet requirements are considered defective. Subsequent tests to establish compliance (of the same or new materials) shall be paid for by the Contractor.

1. Mortar testing shall be performed in accordance with ASTM C 109.

2. Masonry grout testing shall be performed in accordance with ASTM C 1019.

1.06 SHIPPING, HANDLING, AND STORAGE

A. All mortar materials shall be delivered, stored, and handled so as to prevent damage, deterioration, or contamination. All materials shall be stored under cover in a dry place and in the original packaging.

B. All concrete masonry units shall be stored under cover, in a dry place and in a manner to prevent damage, breakage, or staining. Blocks shall be delivered to the site dry, in conformance with the specification limitation for moisture content, and kept dry by storing off the ground and under cover. Blocks which have become wet shall be removed from the site by the Contractor.

C. All accessories shall be delivered to the site and stored in the manufacturers' original packaging. All materials shall be stored above ground and under weathertight cover.

PART 2 – PRODUCTS

2.01 CONCRETE MASONRY UNITS

A. General

1. All concrete masonry units shall be load bearing blocks conforming to ASTM C 90. Units shall be normal weight units unless shown or specified otherwise. Block shall be smooth finish block. Net area compressive strength of concrete masonry units shall be a minimum of 1,900 psi when tested in accordance with ASTM C 140. Compressive strength F'm shall be minimum of 1500 psi in accordance with ACI 530.1 when these units are tested with the mortar specified, unless otherwise indicated on the structural drawings. Reinforced wall units shall be 2 cell end blocks with cells aligned vertically when constructed.

2. All units shall be obtained from one manufacturer to ensure even color and texture throughout.

3. Nominal face dimensions shall be 8 inch by 8 inch by 16 inch, 12 inch by 8 inch by 16 inch, or "U" shaped CMU as indicated on the Drawings.

4. All bond beam, corner, lintel, sill, and other specially shaped blocks shall be provided and used where required or necessary. Specially shaped nonstructural blocks may be constructed by sawcutting. Color and texture shall match that of the adjacent units.

B. Sound Absorptive Concrete Masonry Units

1. Sound absorptive concrete masonry units shall be used to construct walls or partitions as indicated on the Drawings.

2. Sound absorptive concrete masonry units shall be Soundblox made on standard block machines using molds furnished by the Proudfoot Company, Inc., Greenwich, Connecticut; or equal. Units shall meet the requirements of ASTM C 90.

3. Soundblox units shall be 8-inch by 8-inch by 16-inch (nominal), and Type RSC as shown on the Drawings.

4. The filler elements shall be installed at the block plant and be fabricated of noncombustible fibrous material. The fillers shall have metal septa laminated to one side of the fibrous material and shall be installed with the septa facing away from the slots. The filler and the septa shall be cut accurately to size, and installed as recommended.

C. Fire-Rated Units: Masonry units for fire-rated walls shall comply with the requirements of Paragraph 2.01, A above and Underwriter's Laboratory requirements for fire rating as shown on the Drawings.

2.02 MORTAR AND GROUT

A. Mortar shall be Type "M" mortar with average compressive strength at 28 days of 2,500 psi; in accordance with ASTM C 270.

B. The mortar shall be dry mixed to laboratory established proportions with only as much water added as required to produce a workable mix.

C. Hydrated lime shall conform to the requirements of ASTM C 207, Type "S", domestic manufactured.

D. Sand shall be clean, durable particles, free from injurious amounts of organic matter. The sand shall conform to the requirements of ASTM C 144.

E. Water shall be from a potable source, suitable for domestic consumption.

F. Admixture for the mortar shall be Master Builders "Omicron Mortarproofing"; Sika Chemical Company "Sika Red Label"; or equal. The admixture shall not be detrimental to the bonding of the mortar.

G. Masonry Grout shall conform to the requirements of ASTM C 476 and ACI 530.1. Grout shall be plant batched peagravel 3000 psi 28 day compressive strength.

H. Sand for grout shall conform to ASTM C 404 or ASTM C 33, as required.

I. Admixture for grout shall be Sika Chemical Company "Sika Grout Aid", Type II; Master Builders "Pozzolith", normal; or equal.

2.03 MASONRY ACCESSORIES

A. The following list of companies manufacture products that are acceptable for this section, subject to conformance with the specified requirements: Dur O Wall Products, A.A. Wire Products; Hohman Barnard, Keystone Steel and Wire Company, or equal.

B. Masonry Joint Reinforcement

1. All masonry joint reinforcement shall be fabricated from cold drawn steel wire, conforming to ASTM A 82.

2. Reinforcement shall consist of two parallel longitudinal deformed wires, not less than 8 gauge, weld connected with cross-wires, not less than 9 gauge, in a triangular pattern. For vertically reinforced walls, cross wires shall be of a rectangular pattern.

3. Out to out spacing of the longitudinal wires shall be 2 inches less than the nominal width of the wall.

4. The distance between the welded contacts of cross wires with each longitudinal wire shall not exceed 16 inches, staggered.

5. Cross wires shall be in the same plane with the longitudinal wires.

6. Reinforcement shall be provided in minimum 10 foot sections. All corners and tees shall be provided prefabricated, of the same materials as the joint reinforcement.

7. Reinforcing bars shall conform to "Specifications for Deformed Billet Steel Bars for Concrete Reinforcement" (ASTM A 615), grade 60, except 1/4" diameter smooth bars which shall be grade 40.

C. Anchor and Ties

1. Anchors and ties shall be hot dip galvanized ferrous metals.

2. Wire mesh ties shall be minimum 16 gauge, 1/2 inch mesh of steel wire. Ties shall be a minimum of 12 inches in length, and 1 inch less in width than the wall in which they are placed.

3. Rigid steel anchors shall be 1 1/2 inch by 1/4 inch with ends turned up 1/4 inch at the outer end.

4. Dovetail anchors shall be minimum 16 gauge, 1 inch wide, and turned up 1/4 inch at the outer end.

5. Corrugated or crimped metal ties shall be made of steel sheet not less than 7/8-inch-wide, 22 gauge in thickness, 6 inches in length.

2.04 FOAMED-IN-PLACE MASONRY WALL INSULATION

A. Insulation shall be a two-component, foamed-in-place thermal insulation comprising of an amino-plast resin and a catalyst foaming agent surfactant that when injected into open cavities of block will flow and completely fill the open cells.

B. Foamed-in-place insulation shall conform to the requirements of Core-Fill 500 as manufactured by Tailored Chemical Products, Hickory, NC, or approved equal. Tailored Foam of Florida, Inc., Sanford, Florida is an approved applicator of Core-Fill 500 foam insulation.

C. Insulation shall be non-combustible, Class A building material.

D. Insulation shall have an R value of 4.9 per inch at 32 degrees Fahrenheit per ASTM C-177.

PART 3 – EXECUTION

3.01 GENERAL

A. All Work shall be performed in accordance with the provisions of the FBC for concrete hollow unit masonry.

B. All masonry shall be laid plumb and true to line. Bond shall be maintained such that the horizontal or vertical alignment of the foundation shall not be more than 1 inch out of plumb.

C. The Contractor shall set or embed in the Work all anchors, bolts, reglets, sleeves, conduits, and other items as required. Where bolts or other items are anchored into the masonry, those cells shall be grouted solid after the embedded items are in place.

D. No construction support shall be attached to the wall except where specifically permitted by the Engineer.

E. All masonry slots, chases, or openings required for the proper installation of the Work of other Sections shall be constructed as indicated on the Drawings, or in accordance with information furnished, prior to starting Work in those areas. No chase shall be cut into any constructed hollow unit masonry wall, except as directed or reviewed by the Engineer.

F. Surfaces shall be brushed as Work progresses, and maintained as clean as is practicable. Unfinished Work shall be raked back where possible, and toothed only where absolutely necessary.

G. All fresh or unfinished Work shall be fully covered and protected against rain and wind. Before continuing work, all previously laid Work shall be swept clean. The tops of walls or other unfinished Work shall be protected against all damage by means of waterproof paper, tarpaulins, boards, or other means satisfactory to the Engineer.

H. Anchors and ties shall be placed a minimum of 16 inches vertically and 24 inches horizontally, unless otherwise indicated. Anchors and ties for masonry shall be provided into adjacent concrete walls, columns, or beams at the above specified spacings.

I. Over plumbing and pounding shall be avoided, at corners and jambs, for fitting stretcher units after they are set in position. Where adjustment must be made after mortar has started to harden, the mortar shall be removed and replaced with fresh mortar.

J. Concrete brick shall be used to course out walls which are concealed in the finished work.

K. Masonry units shall be cut straight, and true, using power masonry saws.

L. Cold and hot weather construction

1. No masonry shall be erected when ambient temperature has dropped below 45^0 F unless it is rising and at no time when it has dropped below 40^0 F. Provisions shall be made for heating and drying of materials, and the complete work shall be protected in accordance with ACI 530.1 section 1.8C. Masonry shall not be laid with ice or frost on its surfaces, and no masonry shall be laid on frozen work. Any work which freezes before the mortar has set shall be removed and replaced at the Contractor's own expense. Do not use any admixtures or antifreeze in the mortar.

2. When temperature is above 100^0 F or 90^0 F with a wind velocity greater than 8 MPH, mortar beds shall be spread no more than 4 feet ahead of masonry and masonry shall be set within one minute of spreading mortar.

3.02 LAYOUTS

A. The Contractor shall lay out the coursing horizontally and vertically, as shown on the Drawings.

B. Block cuts less than 4 inches wide shall be avoided.

C. Vertical coursing shall be 8 inches, with 3/8 inch thick mortar joints.

D. Bed joints shall be indicated to receive masonry joint reinforcing, ties, and/or anchors.

3.03 REINFORCING

A. All reinforced horizontal joints shall be reinforced continuously with ends lapped 8 inches, and laps staggered vertically. Horizontal reinforcing shall have a vertical spacing of 16 inches on center unless noted otherwise. Prefabricated corners and tees shall be provided at all horizontal wall intersections.

B. Reinforcing shall be provided in the bed joints immediately above and below all masonry openings.

C. Mortar joints with wire reinforcement shall be at least twice the thickness of the wire.

D. Where knock out openings are indicated on the Drawings, no steel or joint reinforcement shall run continuously through the openings.

E. Prior to placing metal reinforcing, anchors, and ties, all loose rust, tie wires, tags and all other foreign matter that may reduce bond shall be removed.

F. Reinforcing shall be placed as indicated on the Drawings and general notes. Place a minimum of two No. 5 bars in each bond beam or lintel, and a minimum of one No. 5 bar at all jambs, corners, intersections and wall ends of concrete blockwalls, whether indicated or not. Lintels shall extend 8 inches past the openings. Lap reinforcing bars 48 diameters or 30 inches minimum at splices. All cells containing reinforcing shall be filled solid with grout.

G. When a dowel does not line up with a vertical core, it shall not be sloped more than 1 horizontal in 6 vertical. Dowels shall be grouted into a core in vertical alignment, even though they are in adjacent cell to the vertical wall reinforcing.

3.04 BOND AND JOINTS

A. All masonry units shall be laid in running bond by lapping units in successive courses a distance of one half unit.

B. The starting joint of foundations and floor slab shall be laid with full mortar coverage on the bed except that the area where grout occurs shall be kept free from mortar so that the grout will bond (contact) with concrete already placed.

C. All courses shall be level, with joints of uniform width. Units shall have full mortar coverage of the face shells in both the horizontal and vertical joints. Reinforced cells shall have mortar coverage on cross webs also to prevent grout leakage to adjacent cells.

D. All joints shall be pointed solid with mortar on both sides and wall of block. Joints in exposed Work shall be finished concave with finishing tool, to create a dense surface. Interior and exterior joints in nonexposed or plaster covered masonry shall be flush.

E. All sound absorptive concrete masonry units shall be laid in stack bond with the open ends of the cavities facing downward, and shall be seated in a full bed of mortar.

F. Slots shall be provided to expose the areas where sound absorption is desired, as indicated on the Drawings. Care shall be taken to ensure that the slots are kept free of mortar or debris above mortar joints.

3.05 CONTROL JOINTS

A. Control joints shall be installed as detailed and where shown on the Drawings or needed.

B. The maximum horizontal distance between vertical control joints shall be 30 feet, but joints shall be located only as reviewed by the Engineer or as shown.

C. Joints shall be equal in width to the standard mortar joints.

D. Horizontal joint reinforcing shall be discontinuous at control joints.

E. Control joints shall not interrupt horizontal reinforcement and grout in bond beam. Where control joint encounter bond beams rake face joint and caulk to align with control joint below.

3.06 MORTAR AND GROUT

A. All equipment used in placing, moving, and storing mortar shall be thoroughly cleaned at the end of each day's work.

B. Mortar that, in the opinion of the Engineer, has begun to set shall not be used.

C. All courses shall be laid in full mortar beds. All units shall be laid with mortar applied to the face shells of blocks previously laid, as well as to blocks being laid, to ensure well filled joints.

D. Where new masonry is joined to existing or partially set work, loose mortar and joints shall first be cleaned. When it is necessary to stop a horizontal run, rack back one half block length in each course; toothing shall not be permitted.

E. Hollow metal frames, mullions, and spaces around built in items shall be filled solidly with grout.

F. Proportioning and Mixing of Mortar

1. Measurement of materials shall be such that the specified proportions are controlled and accurately maintained.

2. Workability of consistency of the mortar on the board shall be sufficiently wet to be worked under the trowel. Water for tempering shall be available on the scaffold at all times. Mortar which has begun to set after initial mixing shall be discarded. Mortar which has stiffened due to evaporation shall be retempered to restore its workability. Retempering the mortar at the mixer shall not be permitted.

3. Mortar shall be machine mixed in a type of mortar mixer which is acceptable to the Engineer, and in which the quantity of water can be accurately and uniformly controlled.

4. The mixing time shall not be less than 5 minutes, approximately 2 minutes of which shall be for mixing the dry materials, and not less than 3 minutes for continuing the mixing after the water has been added.

5. Where hydrated lime is used for mortar requiring a lime content, the Contractor has the option of using the dry mix method or first converting the lime into a putty. Where the dry mix method is employed, the materials for each batch shall be well turned over together until the even color of the mixed, dry materials indicates that the cementitious materials have been thoroughly distributed throughout the mass. After this point, the water shall be gradually added.

G. Mortar and grout drippings shall be cleaned from exposed masonry and adjacent surfaces immediately, to prevent surfaces from being permanently stained. Drippings and smears shall be removed before mortar and/or grout sets or hardens. Mortar extruded beyond faces of walls or partitions shall be removed.

H. Grouting

1. Grouting shall not be started until walls have cured a minimum of 24 hours.

2. Reinforcing steel shall be secured in place and inspected before grouting starts. Inform Engineer for inspection.

3. Mortar drippings shall be kept out of the grout space.

4. Vertical cells to be filled shall have vertical alignment to maintain a continuous unobstructed cell area not less than 2 inches by 3 inches.

5. All cells to be grouted including those with reinforcing shall be solidly filled with grout. Consolidate at time of pouring by puddling (rodding) or vibrating with mechanical vibrators and reconsolidate again after 5 to 10 minutes and no later than 20 minutes to allow water absorption by concrete block.

6. Grout shall be consolidated by puddling or mechanical vibrating during g placement, and reconsolidated after excess moisture has been absorbed, but before plasticity is lost.

7. All anchor bolts and other embedded items shall be securely held in place during the grouting operation.

8. Grouting shall be done in pours no exceeding 10 feet and lifts of a maximum of 5 feet. Provide pre-cut full block height clean out holes at the first course of all cores containing vertical reinforcement. As successive masonry lifts are laid, remove mortar dripping from the grout space and off the reinforcing steel. Prior to grouting and boarding the cleanout opening, remove all leftover mortar drippings and loose materials and flush out the reinforced cell with water. Board up the opening only after Engineer's inspection and approval.

I. Installation of all masonry accessories shall be in strict accordance with manufacturer's recommendations for the particular product. In the event that no specific installation instructions are provided by the manufacturer, accepted industry standard shall be adhered to.

3.07 INSULATION

A. Install foamed-in-place insulation in ungrouted cells of masonry units where shown and/or noted on the drawings.

B. The foamed-in-place insulation shall be pressure injected through a series of 5/8-inch to 7/8-inch holes drilled into every vertical column of block cells beginning at an approximate height of four feet from the finished floor level. Holes shall be patched with mortar and scored to resemble existing surface.

C. Foamed-in-place insulation shall be placed prior to installation of interior finish work, after all masonry and structural concrete work is in place, and once moisture content of in-place CMU is acceptable to the manufacturer. Installation shall comply with manufacturer’s instructions.

D. Remove excess materials and debris promptly. Remove mortar drippings from masonry and adjacent work before final set.

E. All holes and openings in the wall through which insulation can escape shall be permanently sealed or caulked prior to installation of the insulation. Copper, galvanized steel, or fiber glass screening shall be used in all weep holes.

3.08 BUILT-IN WORK

A. Furnish and install all anchor bolts, access doors and frames, and all metal work to be built into masonry which is not specified to be furnished under any other heading of the Specifications.

B. The masonry Contractor shall thoroughly familiarize himself with all the requirements of the structural steel and reinforced concrete work and specifications, and he must make his own work conform to the requirements therein illustrated or described. He shall build in all the structural steel and miscellaneous iron work of every description.

C. Thoroughly tie in all anchors and secure masonry work to the concrete work in a careful manner. All pockets and openings must be filled solidly with mortar so as to leave no air space or pockets to collect moisture. No iron work shall be covered or built-in unless thoroughly painted by the Contractor setting it.

D. The masonry Contractor shall build-in items furnished by others.

E. The masonry Contractor shall coordinate his work with mechanical and electrical trades in order to accommodate all built-in pipes and conduits.

3.09 LINTELS

A. Furnish and install precast reinforced concrete lintel at all openings in masonry walls not having poured lintel or tie beam at top. Provide 8" minimum bearing either side of opening. Bottom flange of precast lintels shall be pre-cut at bearing to allow passage of reinforcing and grout.

3.10 CLEANING AND POINTING

A. All masonry to be left exposed shall be cleaned thoroughly with 5 percent muriatic acid solution using stiff brush and rinse thoroughly with clear water.

B. Point all holes and chipped areas in exposed masonry. Cut out defective joints and tuck pointed solidly with like mortar.

C. Remove all loose and excess mortar prior to cleaning.

3.11 PARGING

A. Parge masonry walls where shown or indicated on the drawings in two uniform costs of mortar. Maintain 3/4 inch total thickness.

B. Dampen masonry walls prior to application.

C. Scarify base coat to ensure full bond to subsequent coat.

D. Steel trowel surface smooth and flat.

- END OF SECTION -

DIVISION 5 – METALS

SECTION 05010

METAL MATERIALS

PART 1 – GENERAL

1.01 THE REQUIREMENT

A. Metal materials not otherwise specified shall conform to the requirements of this Section.

1.02 RELATED WORK SPECIFIED ELSEWHERE

A. Materials for fasteners are included in Section 05050 entitled "Metal Fastening".

B. Requirements for specific products made from the materials specified herein are included in other sections of the Specifications. See the section for the specific item in question.

1.03 REFERENCE SPECIFICATIONS, CODES AND STANDARDS

A. ASTM A36 Standard Specification for Structural Steel

B. ASTM A47 Standard Specification for Malleable Iron Castings

C. ASTM A48 Standard Specification for Gray Iron Castings

D. ASTM A53 Standard Specification for Pipe, Steel, Black and Hot-Dipped, Zinc-Coated Welded and Seamless

E. ASTM A167 Standard Specification for Stainless and Heat-Resisting Chromium-Nickel Steel Plate, Sheet, and Strip

F. ASTM A276 Standard Specification for Stainless and Heat-Resisting Steel Bars and Shapes

G. ASTM A307 Standard Specification for Carbon Steel Externally Threaded Standard Fasteners

H. ASTM A446 Standard Specification for Steel Sheet, Zinc-Coated (Galvanized) by the Hot-Dip Process, Structural (Physical) quality

I. ASTM A500 Standard Specification for Cold-Formed Welded and Seamless Carbon Steel Structural Tubing in Rounds and Shapes

J. ASTM A501 Standard Specification for Hot-Formed Welded and Seamless Carbon Steel Structural Tubing

K. ASTM A529 Standard Specification for Structural Steel with 42 000 psi (290 Mpa) Minimum Yield Point (1/2 in. (12.7 mm) Maximum Thickness)

L. ASTM A536 Standard Specification for Ductile Iron Castings

M. ASTM A570 Standard Specification for Hot-Rolled Carbon Steel Sheet and Strip, Structural Quality

N. ASTM A572/ Standard Specification for High Strength Low-Alloy Columbium-Vanadium Structural Steel Grade 50

O. ASTM A666 Standard Specification for Austenitic Stainless Steel, Sheet, Strip, Plate, and Flat Bar for Structural Applications

P. ASTM A992 Standard Specification for Structural Steel Shapes

Q. ASTM A1085 Standard Specification for Cold-Formed Welded Carbon Steel Hollow Structural Sections (HSS)

R. ASTM B26 Standard Specification for Aluminum-Alloy Sand Castings

S. ASTM B85 Standard Specification for Aluminum-Alloy Die Castings

T. ASTM B108 Standard Specification for Aluminum-Alloy Permanent Mold Castings

U. ASTM B138 Standard Specification for Manganese Bronze Rod, Bar, and Shapes

V. ASTM B209 Standard Specification for Aluminum-Alloy Sheet and Plate

W. ASTM B221 Standard Specification for Aluminum-Alloy Extruded Bars, Rods, Wire, Shapes, and Tubes

X. ASTM B308 Standard Specification for Aluminum-Alloy Standard Structural Shapes, Rolled or Extruded

Y. ASTM B574 Standard Specification for Nickel-Molybdenum-Chromium Alloy Rod

Z. ASTM F468 Standard Specification for Nonferrous Bolts, Hex Cap Screws, and Studs for General Use

AA. ASTM F593 Standard Specification for Stainless Steel Fasteners

1.04 SUBMITTALS

A. Material certifications shall be submitted along with any shop drawings for metal products and fabrications required by other sections of the Specifications.

1.05 QUALITY ASSURANCE

A. City may engage the services of a testing agency to test any metal materials for conformance with the material requirements herein. If the material is found to be in conformance with Specifications the cost of testing will be borne by the City. If the material does not conform to the Specifications, the cost of testing shall be paid by the Contractor and all materials not in conformance as determined by the Engineer shall be replaced by

the Contractor at no additional cost to the City. In lieu of replacing materials the Contractor may request further testing to determine conformance, but any such testing shall be paid for by the Contractor regardless of outcome of such testing.

PART 2 – PRODUCTS

2.01 CARBON AND LOW ALLOY STEEL

A. Material types and ASTM designations shall be as listed below:

1. Steel W Shapes ..... ASTM A 992
2. Steel S, M, C, MC Shapes and Angles, Bars, and Plates ..... ASTM A 36
3. Steel HP Shapes ..... ASTM A 572, Grade 50
4. Rods ..... ASTM F 1554 Grade 36
5. Pipe – Structural Use ..... ASTM A53 Grade B
6. Hollow Structural Sections ..... ASTM A500 Grade C or A1085
7. Cold-Formed Steel Framing ..... ASTM A 653

2.02 STAINLESS STEEL

A. All stainless steel fabrications shall be Type 316.

B. Material types and ASTM designations are listed below:

1. Plates and Sheets ..... ASTM A167 or A666 Grade A
2. Structural Shapes ..... ASTM A276
3. Fasteners (Bolts, etc.) ..... ASTM F593

2.03 ALUMINUM

A. All aluminum shall be alloy 6061-T6, unless otherwise noted or specified herein.

B. Material types and ASTM designations are listed below:

1. Structural Shapes ..... ASTM B308
2. Castings ..... ASTM B26, B85, or B108
3. Extruded Bars ..... ASTM B221 - Alloy 6061
4. Extruded Rods, Shapes and Tubes ..... ASTM B221 - Alloy 6063
5. Plates ..... ASTM B209 - Alloy 6061
6. Sheets ..... ASTM B221 - Alloy 3003

C. All aluminum structural members shall conform to the requirements of Section 05140 entitled "Structural Aluminum".

D. All aluminum shall be provided with mill finish unless otherwise noted.

E. Where bolted connections are indicated, aluminum shall be fastened with Type 316 stainless steel bolts.

F. Aluminum in contact with dissimilar materials shall be insulated with an approved dielectric.

2.04 CAST IRON

A. Material types and ASTM designations are listed below:

1. Gray .....ASTM A48 Class 30B

2. Malleable.....ASTM A47

3. Ductile .....ASTM A536 Grade 60-40-18

2.05 BRONZE

A. Material types and ASTM designations are listed below:

1. Rods, Bars and Sheets ..... ASTM B138 - Alloy B Soft

2.06 HASTELLOY

A. All Hastelloy shall be Alloy C-276.

PART 3 – EXECUTION

(NOT USED)

- END OF SECTION -

SECTION 05035

GALVANIZING

PART 1 – GENERAL

1.01 THE REQUIREMENT

A. Where galvanizing is called for in the Contract Documents, the galvanizing shall be performed in accordance with the provisions of this Section unless otherwise noted.

1.02 RELATED WORK SPECIFIED ELSEWHERE

A. Further requirements for galvanizing specific items may be included in other Sections of the Specifications. See section for the specific item in question.

1.03 REFERENCE SPECIFICATIONS, CODES, AND STANDARDS

A. Without limiting the generality of the other requirements of the specifications, all work herein shall conform to the applicable requirements of the following documents. All referenced specifications, codes, and standards refer to the most current issue available at the time of Bid.

1. Florida Building Code

2. ASTM A123 Standard Specification for Zinc (Hot-Galvanized) Coatings on Products Fabricated from Rolled, Pressed, and Forged Steel Shapes, Plates, Bars, and Strip

3. ASTM A153 Standard Specification for Zinc Coating (Hot-Dip) on Iron and Steel Hardware

4. ASTM A653 Standard Specification for Steel Sheet, Zinc Coated (Galvanized), or Zinc-Iron Alloy-Coated (Galvannealed) by the Hot-Dip Process

5. ASTM A924 Standard Specification for General Requirements for Steel Sheet, Metallic-Coated by the Hot-Dip Process

6. ASTM A780 Standard Practice of Repair of Damaged Hot-Dip Galvanized Coatings

7. ASTM F2329 Standard Specification for Zinc Coating, Hot-Dip, Requirements for Application to Carbon and Alloy Steel Bolts, Screws, Washers, Nuts, and Special Threaded Fasteners

1.04 SUBMITTALS

A. Submit the following in accordance with Section 01300 entitled "Submittals".

1. Certification that the item(s) are galvanized in accordance with the applicable ASTM standards specified herein. This certification may be included as part of any material certification that may be required by other Sections of the Specifications.

PART 2 – PRODUCTS

2.01 GALVANIC COATING

A. Material composition of the galvanic coating shall be in accordance with the applicable ASTM standards specified herein.

PART 3 – EXECUTION

3.01 FABRICATED PRODUCTS

A. Products fabricated from rolled, pressed, and forged steel shapes, plates, bars, and strips, 1/8-inch thick and heavier which are to be galvanized shall be galvanized in accordance with ASTM A123. Products shall be fabricated into the largest unit which is practicable to galvanize before the galvanizing is done. Fabrication shall include all operations necessary to complete the unit such as shearing, cutting, punching, forming, drilling, milling, bending, and welding. Components of bolted or riveted assemblies shall be galvanized separately before assembly. When it is necessary to straighten any sections after galvanizing, such work shall be performed without damage to the zinc coating. The galvanizer shall be a member of American Galvanizers Association.

B. Components with partial surface finishes shall be commercial blast cleaned prior to pickling.

C. Sampling and testing of each lot shall be performed prior to shipment from the galvanizer's facility per ASTM A123.

3.02 HARDWARE

A. Iron and steel hardware which is to be galvanized shall be galvanized in accordance with ASTM A153 and ASTM F2329.

3.03 ASSEMBLED PRODUCTS

A. Assembled steel products which are to be galvanized shall be galvanized in accordance with ASTM A123. All edges of tightly contacting surfaces shall be completely sealed by welding before galvanizing.

B. Assemblies shall be provided with vent and drain holes as required by the fabricator. Vent and drain hole sizes and locations shall be included in the structural steel shop drawings required in Specification 05120 – Structural Steel for approval. All vent and drain holes shall be plugged and finished to be flush with and blend in with the surrounding surface. Where water intrusion can occur, the plug shall be carefully melted into the surrounding zinc coating using appropriate fluxing agent.

3.04 METAL DECK

A. Unless noted otherwise, metal deck shall be galvanized in accordance with ASTM A653 G60 minimum. In moist environments or as indicated on the Contract Drawings, galvanizing shall meet the rquirements of ASTM A653 G90.

B. Galvanized metal deck shall meet the requirements of ASTM A924.

3.05 SHEETS

A. Iron or steel sheets which are to be galvanized shall be galvanized in accordance with ASTM A924.

3.06 REPAIR OF GALVANIZING

A. Galvanized surfaces that are abraded or damaged at any time after the application of zinc coating shall be repaired by thoroughly wire brushing the damaged areas and removing all loose and cracked coating, after which the cleaned areas shall be painted with 2 coats of zinc rich paint meeting the requirements of Federal Specification DOD-P-21035A and shall be thoroughly mixed prior to application. Zinc rich paint shall not be tinted. The total thickness of the 2 coats shall not be less than 6 mils. In lieu of repairing by painting with zinc rich paint, other methods of repairing galvanized surfaces in accordance with ASTM A780 may be used provided the proposed method is acceptable to the Engineer.

- END OF SECTION -

SECTION 05050

METAL FASTENING

PART 1 – GENERAL

1.01 THE REQUIREMENT

A. The Contractor shall furnish all materials, labor, and equipment required to provide all metal welds and fasteners not otherwise specified, in accordance with the Contract Documents.

1.02 RELATED WORK SPECIFIED ELSEWHERE

A. Section 05010 - Metal Materials

B. Section 05035 - Galvanizing

C. Section 05120 - Structural Steel

D. Section 05140 - Structural Aluminum

1.03 REFERENCE SPECIFICATIONS, CODES, AND STANDARDS

A. Without limiting the generality of the other requirements of the specifications, all work herein shall conform to the applicable requirements of the following documents. All referenced specifications, codes, and standards refer to the most current issue available at the time of Bid.

1. Florida Building Code
2. AC 193 — Acceptance Criteria for Mechanical Anchors in Concrete Elements
3. AC 308 — Acceptance Criteria for Post-Installed Adhesive Anchors in Concrete Elements
4. ACI 318 — Building Code Requirements for Structural Concrete
5. ACI 355.2 — Qualifications of Post-Installed Mechanical Anchors in Concrete
6. ACI 355.4 — Qualification of Post-Installed Adhesive Anchors in Concrete
7. AISC 348 — The 2009 RCSC Specification for Structural Joints
8. AISC — Code of Standard Practice
9. AWS D1.1 — Structural Welding Code - Steel
10. AWS D1.2 — Structural Welding Code – Aluminum
11. AWS D1.6 — Structural Welding Code – Stainless Steel

12. Aluminum Association Specifications for Aluminum Structures
13. ASTM A572/A572M-94C Standard Specification for High Strength Low-Alloy Columbium-Vanadium Structural Steel Grade 50
14. ASTM A36 Standard Specification for Carbon Structural Steel
15. ASTM A325 Standard Specification for High-Strength Bolts for Structural Steel Joints
16. ASTM A489 Standard Specification for Eyebolts
17. ASTM A490 Standard Specification for Quenched and Tempered Alloy Steel Bolts for Structural Steel Joints
18. ASTM A563 Standard Specifications for Carbon and Alloy Steel Nuts
19. ASTM D1785 Standard Specification for Polyvinyl Chloride (PVC) Plastic Pipe
20. ASTM E488 Standard Test Methods for Strength of Anchors in Concrete and Masonry Elements
21. ASTM F436 Standard Specification for Hardened Steel Washers
22. ASTM F467 Standard Specification for Nonferrous Nuts for General Use
23. ASTM F593 Standard Specification for Stainless Steel Bolts; Hex Cap Screws, and Studs
24. ASTM F594 Standard Specification for Stainless Steel Nuts
25. ASTM F1554 Standard Specification for Anchor Bolts, Steel, 36, 55, and 105-ksi Yield Strength

1.04 SUBMITTALS

A. Submit the following items in accordance with Section 01300 entitled "Submittals":

1. Shop Drawings providing the fastener's manufacturer and type and certification of the fastener's material and capacity.
2. Anchor design calculations sealed by a Professional Engineer currently registered in the State of Florida. Only required if design not shown on Contract Drawings.
3. Manufacturer’s installation instructions.
4. Welder certifications for each person who is to perform field welding. Certifications shall be from a recognized testing laboratory.
5. Certified weld inspection reports, when required.
6. Welding procedures.
7. Installer qualifications

8. Certification of Installer Training

9. Inspection Reports

10. Results of Anchor Proof Testing

11. For outdoor equipment, anchorage calculations to resist design wind loads, signed and sealed by a Professional Engineer registered in the State of Florida.

1.05 QUALITY ASSURANCE

A. Fasteners not manufactured in the United States shall be tested and certification provided with respect to specified quality and strength standards. Certifications of origin shall be submitted for all U.S. fasteners supplied on the project.

B. Installer Qualifications: All concrete anchors shall be installed by an Installer with at least three years of experience performing similar installations. Installer shall be certified as an Adhesive Anchor Installer in accordance with ACI-CRSI Adhesive Anchor Installation Certification Program.

C. Installer Training: For concrete adhesive anchors, conduct a thorough training with the manufacturer or the manufacturer's representative for the Installer on the project. Training shall consist of a review of the complete installation process for drilled-in anchors, to include but not be limited to the following:

1. Hole drilling procedure.

2. Hole preparation and cleaning technique.

3. Adhesive injection technique and dispenser training/maintenance.

4. Rebar doweling preparation and installation.

5. Proof loading/torquing.

D. All steel welding shall be performed by welders certified in accordance with AWS D1.1. All aluminum welding shall be performed by welders certified in accordance with AWS D1.2. All stainless steel welding shall be performed by welders certified in accordance with AWS D1.6. Certifications of field welders shall be submitted prior to performing any field welds.

E. Welds and high strength bolts used in connections of structural steel will be visually inspected in accordance with Article 3.04 of this Section.

F. The City may engage an independent testing agency to perform testing of welded connections and to prepare test reports in accordance with AWS. Inadequate welds shall be corrected or redone and retested to the satisfaction of the Engineer and/or an acceptable independent testing laboratory, at no additional cost to the City.

G. Provide a welding procedure for each type and thickness of weld. For welds that are not prequalified, include a Performance Qualification Report. The welding procedure shall be given to each welder performing the weld. The welding procedure shall follow the format in Annex E of AWS D1.1 with relevant information presented.

H. Inspections of the adhesive dowel system shall be made by the Engineer or other representatives of the City in accordance with the requirements of the ESR published by the manufacturer. Provide adequate time and access for inspections of products and ANCHOR HOLES PRIOR TO INJECTIONS, INSTALLATION, AND PROOF TESTING.

PART 2 – PRODUCTS

2.01 ANCHOR RODS (ANCHOR BOLTS)

A. For all conditions throughout this Contract, all anchor bolts shall be Type 316 stainless steel conforming to ASTM F-593 unless noted otherwise.

B. Nuts shall conform to ASTM F-594, alloy 316.

C. Where anchor rods are used to anchor galvanized steel or are otherwise specified to be galvanized, anchor rods and nuts shall be hot-dip galvanized. Galvanized anchor rods shall conform to ASTM F1554 Grade 36, and nuts shall conform to ASTM A563 Grade A.

D. Where pipe sleeves around anchor rods are shown on the Drawings, pipe sleeves shall be cut from Schedule 80 PVC plastic piping meeting the requirements of ASTM D1785, unless noted otherwise.

E. Equipment manufacturers, fabricators, and suppliers shall design and furnish anchor bolts as required to install the supplied units. The anchor bolt layout shall be coordinated with concrete work as specified herein.

F. Drilled in type anchor bolts, either adhesive types or mechanical types shall not be used unless approved in writing by the manufacturer/fabricator of equipment or covers, subject to acceptance by the Engineer. All operating pieces of equipment such as pumps, generators, motors etc. shall not be anchored with wedge anchors or other mechanical anchors. Drilled in type anchor bolts shall be Type 316 stainless steel. Drilled in type anchor bolts are specified under Article 2.04 of this Section entitled "Concrete Anchors".

2.02 HIGH STRENGTH BOLTS

A. High strength bolts and associated nuts and washers shall be in accordance with ASTM F3125, grade A325 or grade A490. Bolts, nuts and washers shall meet the requirements of AISC "Specification for Structural Joints Using High Strength Bolts".

B. Where high strength bolts are used to connect galvanized steel or are otherwise specified to be galvanized, bolts, nuts, and washers shall be hot-dip galvanized in accordance with ASTM A325.

2.03 STAINLESS STEEL BOLTS

A. Stainless steel bolts shall conform to ASTM F-593. All underwater fasteners, fasteners in confined areas containing fluid, and fasteners in corrosive environments shall be Type 316 stainless steel. Unless otherwise specified, fasteners for aluminum and stainless steel members shall be Type 316 stainless steel.

B. Stainless steel bolts shall have hexagonal heads with a raised letter or symbol on the bolts indicating the manufacturer, and shall be supplied with hexagonal nuts meeting the requirements of ASTM F594. Nuts shall be of the same alloy as the bolts.

2.04 CONCRETE ANCHORS

A. General

1. Where concrete anchors are called for on the Drawings, one of the types listed below shall be used; except, where one of the types listed below is specifically called for on the Drawings, only that type shall be used. The determination of anchors equivalent to those listed below shall be on the basis of test data performed by an approved independent testing laboratory. There are two types used:

   a. Expansion anchors shall be mechanical anchors of the wedge, sleeve, drop-in or undercut type.

   b. Adhesive anchors shall consist of threaded rods or bolts anchored with an adhesive system into hardened concrete. Adhesive anchors shall be two part injection type using the manufacturer's static mixing nozzle and shall be supplied as an entire system.

2. Expansion anchors shall not be used to hang items from above or in any other situation where direct tension forces are induced in anchor.

3. Unless otherwise noted, all concrete anchors which are submerged or subject to water off-gassing, or are used in hanging items or have direct tension induced upon them, or which are subject to vibration from equipment such as pumps and generators, shall be adhesive anchors.

4. Adhesive anchors shall conform to the requirements of ACI 355.4 or alternately to AC308. Expansion or mechanical anchors shall conform to the requirements of ACI 355.2 or alternately to AC 193.

5. Fire Resistance: All anchors installed within fire resistant construction shall either be enclosed in a fire resistant envelope, be protected by approved fire-resistive materials, be used to resist wind and earthquake loads only, or anchor non-structural elements.

6. Engineer's approval is required for use of concrete anchors in locations other than those shown on the Drawings.

B. Concrete Anchor Design: An anchor design consists of specifying anchor size, quantity, spacing, edge distance and embedment to resist all applicable loads. Where an anchor design is indicated on the Drawings, it shall be considered an engineered design and anchors shall be installed to the prescribed size, spacing, embedment depth and edge distance. If all parts of an anchor design are provided on the Drawings except embedment depth, the anchors will be considered an engineered design and the Contractor shall provide the embedment depth as indicated in Paragraph B.3 unless otherwise directed by the Engineer. Where an anchor design is not indicated by the Engineer on the Drawings, the Contractor shall provide the anchor design per the requirements listed below.

1. Structural Anchors: All concrete anchors shall be considered structural anchors if they transmit load between structural elements; transmit load between non-structural components that make up a portion of the structure and structural elements; or transmit load between life-safety related attachments and structural elements. Examples of structural concrete anchors include but are not limited to column anchor bolts, anchors supporting non-structural walls, sprinkler piping support anchors, anchors supporting heavy, suspended piping or equipment, anchors supporting barrier rails, etc. For structural anchors, the Contractor shall submit an engineered design with signed and sealed calculations performed by an Engineer currently registered in the State of Florida. Structural anchors shall be of a type recommended by the anchor manufacturer for use in cracked concrete and shall be designed by the Contractor in accordance with ACI 318 Appendix D.

2. Non-Structural Anchors: All other concrete anchors may be considered non-structural concrete anchors. The Contractor shall perform an engineered design for non-structural anchors. The Engineer may request the Contractor provide anchor design details for review, but submission of a signed, sealed design is not required. Non-structural anchors shall be designed by the contractor for use in uncracked concrete.

3. Embedment Depth

   a. Minimum anchor embedment shall be as indicated on the Drawings or determined by the Contractor's engineered design. Although all manufacturers listed are permitted, the embedment depth indicated on the Drawings is based on "SET XP by Simpson Strong-Tie". If the Contractor submits one of the other concrete adhesives anchors listed, the Engineer shall evaluate the required embedment and the Contractor shall provide the required embedment depth stipulated by the Engineer specific to the approved dowel adhesive.

   b. Where the embedment depth is not shown on the Drawings, concrete anchors shall be embedded no less than the manufacturer's standard embedment (expansion or mechanical anchors) or to provide a minimum allowable bond strength equal to the allowable yield capacity of the rod according to the manufacturer (adhesive anchors).

   c. The embedment depth shall be determined using the actual concrete compressive strength, a cracked concrete state, maximum long term temperature of 110 degrees F, and maximum short term temperature of 140 degrees F. In no case shall the embedment depth be less than the minimum or more than the maximum stated in the manufacturer's literature.

C. Structural Anchors:

1. Mechanical Anchors:

   a. Wedge Anchors: Wedge anchors shall be "Kwik Bolt TZ" by Hilti, Inc., "TruBolt +" by ITW Redhead, "Strong-Bolt 2" by Simpson Strong-Tie Co. or "Powerstud SD-1" or "Powerstud SD-2" by Powers Fasteners.

   b. Screw Anchors: Screw anchors shall be "Kwik HUS-EZ" and "KWIK HUS-EZ-I" by Hilti, Inc., "Titen HD" by Simpson Strong-Tie Co., or "Wedge-Bolt +" by Powers

Fasteners. Bits specifically provided by manufacturer of chosen system shall be used for installation of anchors.

c. Sleeve Anchors: Sleeve anchors shall be “HSL-3 Heavy Duty Sleeve Anchor” by Hilti, Inc. or “Power-Bolt +” by Powers Fasteners.

d. Undercut Anchors: Undercut anchors shall be “HDA Undercut Anchor” by Hilti, Inc., “Torq-Cut Undercut Anchor” by Simpson Strong-Tie Co., “Atomic + Undercut Anchor” by Powers Fasteners

2. Adhesive Anchors:

a. Adhesive anchors shall be “Epcon C6+ Adhesive Anchoring System” by ITW Redhead, “HIT HY-200 Adhesive Anchoring System” by Hilti, Inc., “SET-XP Epoxy Adhesive Anchors” by Simpson Strong-Tie Co., or “Pure 110+ Epoxy Adhesive Anchor System” by Powers Fasteners.

b. Structural adhesive anchor systems shall be IBC compliant and capable of resisting short term wind and seismic loads (Seismic Design Categories A through F) as well as long term and short term sustained static loads in both cracked and uncracked concrete in all Seismic Design Categories. Structural adhesive anchor systems shall comply with the latest revision of ICC-ES Acceptance Criteria AC308, and shall have a valid ICC-ES report in accordance with the applicable building code. No or equal products will be considered unless prequalified and approved by the Engineer and City.

D. Non-Structural Anchors: In addition to the acceptable non-structural anchors listed below, all structural anchors listed above may also be used as non-structural anchors.

1. Mechanical Anchors:

a. Wedge Anchors: Wedge anchors shall be “Kwik Bolt 3” by Hilti, Inc., “Wedge-All” by Simpson Strong-Tie Co. or “TruBolt” by ITW Redhead.

b. Screw Anchors: Screw anchors shall be “Kwik HUS” by Hilti, Inc., “Wedge-Bolt” by Powers Fasteners “Large Diameter Tapcon (LDT) Anchor” by ITW Redhead, or “Titen HD” by Simpson Strong-Tie Co. Bits specifically provided by manufacturer of chosen system shall be used for installation of anchors.

c. Sleeve Anchors: Sleeve anchors shall be “HSL Heavy Duty Sleeve Anchors” by Hilti, Inc. “Power-Bolt” by Powers Fasteners “Dynabolt Sleeve Anchor” by ITW Redhead, or “Sleeve-All” by Simpson Strong-Tie Co.

d. Drop-In Anchors: Drop-in anchors shall be “Drop-In” by Simpson Strong-Tie Co., “HDI Drop-In Anchor” by Hilti, Inc. or “Multi-Set II Drop-In Anchor” by ITW Redhead.

e. Undercut Anchors: Undercut anchors shall be “HDA Undercut Anchor” by Hilti, Inc., or “Torq-Cut” by Simpson Strong-Tie Co.

2. Adhesive Anchors:

a. Adhesive anchors shall be “Epcon A7” or “Epcon C6+ Adhesive Anchoring System” by ITW Redhead, “HIT HY-200 Adhesive Anchoring System” by Hilti,

Inc., “SET Epoxy Tie High Strength Anchoring Adhesive” or “AT High Strength Anchoring Adhesive” by Simpson Strong-Tie Co., or “Powers AC 100+ Gold Vinylester Injection Adhesive Anchoring System” or “T308+ Epoxy Adhesive Injection System” by Powers Fasteners.

b. Non-structural adhesive anchors systems shall be IBC compliant and capable of resisting short term wind and seismic (Seismic Design Categories A and B) as well as long term and short term sustained static loads in uncracked concrete.

c. Non-structural adhesive anchor embedment depth of the rod shall provide a minimum allowable bond strength that is equal to the allowable yield capacity of the rod unless noted otherwise on the Drawings.

d. No or equal products will be considered unless prequalified and approved by the Engineer and City.

E. Concrete Anchor Rod/Bolt Materials:

1. Concrete anchors used to anchor structural steel shall be a threaded steel rod per manufacturer’s recommendations for proposed adhesive system, but shall not have a yield strength (fy) less than 58 ksi nor an ultimate strength (fu) less than 72.5 ksi, unless noted otherwise. Where steel to be anchored is galvanized, concrete anchors shall also be galvanized unless otherwise indicated on the Drawings.

2. Concrete anchors used to anchor aluminum, FRP, or stainless steel shall be Type 316 stainless steel unless noted otherwise. All underwater concrete anchors shall be Type 316 stainless steel.

3. Nuts, washers, and other hardware shall be of a material to match the anchors.

2.05 MASONRY ANCHORS

A. Anchors for fastening to solid or grout-filled masonry shall be adhesive anchors as specified above for concrete anchors.

B. Anchors for fastening to hollow masonry or brick shall be adhesive anchors consisting of threaded rods or bolts anchored with an adhesive system dispensed into a screen tube inserted into the masonry. The adhesive system shall use a two-component adhesive mix and shall inject into the screen tube with a static mixing nozzle. Thoroughly clean drill holes of all debris and drill dust with nylon (not wire) brush prior to installation of adhesive and anchor. Contractor shall follow manufacturer’s installation instructions. The adhesive system shall be “HIT HY-70 System” as manufactured by Hilti, Inc., or “SET-XP Epoxy-Tie or “AT-XP Acrylic-Tie” as manufactured by Simpson Strong-Tie Co.

C. Masonry anchors used to anchor steel shall be a threaded steel rod per manufacturer’s recommendations for proposed adhesive system, but shall not have a yield strength (fy) less than 58 ksi nor an ultimate strength (fu) less than 72.5 ksi, unless noted otherwise. Where steel to be anchored is galvanized, masonry anchors shall also be galvanized.

D. Masonry anchors used to anchor aluminum, FRP, or stainless steel shall be Type 304 stainless steel unless noted otherwise. All underwater anchors shall be Type 316 stainless steel.

2.06 WELDS

A. Electrodes for welding structural steel and all ferrous steel shall comply with AWS Code, using E70 series electrodes for shielded metal arc welding (SMAW), or F7 series electrodes for submerged arc welding (SAW).

B. Electrodes for welding aluminum shall comply with the Aluminum Association Specifications and AWS D1.2.

C. Electrodes for welding stainless steel and other metals shall comply with AWS D1.6.

2.07 WELDED STUD CONNECTORS

A. Welded stud connectors shall conform to the requirements of AWS D1.1 Type C.

2.08 EYEBOLTS

A. Eyebolts shall conform to ASTM A489 unless noted otherwise.

2.09 HASTELLOY FASTENERS

A. Hastelloy fasteners and nuts shall be constructed of Hastelloy C-276.

2.10 ANTISEIZE LUBRICANT

A. Antiseize lubricant shall be Graphite 50 Anti-Seize by Loctite Corporation, 1000 Anti-Seize Paste by Dow Corning, 3M Lube and Anti-Seize by 3M, or equal.

PART 3 – EXECUTION

3.01 MEASUREMENTS

A. The Contractor shall verify all dimensions and review the Drawings and shall report any discrepancies to the Engineer for clarification prior to starting fabrication.

3.02 ANCHOR INSTALLATION

A. Anchor Rods, Concrete Anchors, and Masonry Anchors

1. Anchor rods shall be installed in accordance with AISC "Code of Standard Practice" by setting in concrete while it is being placed and positioned by means of a rigidly held template. Overhead adhesive anchors, and base plates or elements they are anchoring, shall be shored as required and securely held in place during anchor setting to prevent movement during anchor installation. Movement of anchors during curing is prohibited.

2. The Contractor shall verify that all concrete and masonry anchors have been installed in accordance with the manufacturer's recommendations and that the capacity of the installed anchor meets or exceeds the specified safe holding capacity.

3. Concrete anchors shall not be used in place of anchor rods without Engineer's approval.

4. All stainless steel threads shall be coated with antiseize lubricant.

B. High Strength Bolts

1. All bolted connections for structural steel shall use high strength bolts. High strength bolts shall be installed in accordance with AISC 348 "The 2009 RCSC Specification for Structural Joints". All bolted joints shall be Type N, snug-tight, bearing connections in accordance with AISC Specifications unless noted otherwise on the Drawings.

2. All stainless steel bolts shall be coated with antiseize lubricant.

C. Concrete Anchors

1. Concrete at time of anchor installation shall be a minimum age of 21 days, have a minimum compressive strength of 2500 psi, and shall be at least 50 degrees F.

2. Concrete anchors designed by the Contractor shall be classified as structural or non-structural based on the requirements indicated above.

3. Concrete Anchor Testing:

a. At all locations where concrete anchors meet the requirements for structural anchors at least 5 percent of all concrete anchors installed shall be proof tested to the value indicated on the Drawings, with a minimum of one tested anchor per anchor group. If no test value is indicated on the Drawings but the installed anchor meets the requirements for structural anchors, the Contractor shall notify the Engineer to allow verification of whether anchor load proof testing is required.

b. Contractor shall submit a plan and schedule indicating locations of anchors to be tested, load test values and proposed anchor testing procedure (including a diagram of the testing equipment proposed for use) to the Engineer for review prior to conducting any testing. Testing of anchors shall be in accordance with ASTM E488 for the static tension test. If additional tests are required, inclusion of these tests shall be as stipulated on Contract Drawings.

c. Where Contract Documents indicate anchorage design to be the Contractor's responsibility and the anchors are considered structural per the above criteria, the Contractor shall submit a plan and schedule indicating locations of anchors to be proof tested and load test values, sealed by a Professional Engineer currently registered in the State of Florida. The Contractor's Engineer shall also submit documentation indicating the Contractor's testing procedures have been reviewed and the proposed procedures are acceptable. Testing procedures shall be in accordance with ASTM E488.

d. Concrete Anchors shall have no visible indications of displacement or damage during or after the proof test. Concrete cracking in the vicinity of the anchor after loading shall be considered a failure. Anchors exhibiting damage shall be

removed and replaced. If more than 5 percent of tested anchors fail, then 100 percent of anchors shall be proof tested.

e. Proof testing of concrete anchors shall be performed by an independent testing laboratory hired directly by the Contractor and approved by the Engineer. The Contractor shall be responsible for costs of all testing, including additional testing required due to previously failed tests.

4. All concrete anchors shall be installed in strict conformance with the manufacturer's printed installation instructions. A representative of the manufacturer shall be on site when required by the Engineer.

5. All holes shall be drilled with a carbide bit unless otherwise recommended by the manufacturer. No cored holes shall be allowed unless specifically approved by the Engineer. If coring holes is allowed by the manufacturer and approved by the Engineer, cored holes shall be roughened in accordance with manufacturer requirements. Thoroughly clean drill holes of all debris and drill dust with compressed air followed by a wire brush prior to installation of adhesive and threaded rod/bolt unless otherwise recommended by the manufacturer. Degree of hole dampness shall be in strict accordance with manufacturer recommendations. Where depth of hole exceeds the length of the static mixing nozzle, a plastic extension hose shall be used to ensure proper adhesive injection from the back of the hole. Injection of adhesive into the hole shall utilize a piston plug to minimize the formation of air pockets. Wipe rod free from oil that may be present from shipping or handling.

D. Other Bolts

1. All dissimilar metal shall be connected with appropriate fasteners and shall be insulated with a dielectric or approved equal. Unless otherwise specified, where aluminum and steel members are connected together they shall be fastened with Type 316 stainless steel bolts and insulated with micarta, nylon, rubber, or equal.

3.03 WELDING

A. All welding shall comply with AWS Code for procedures, appearance, quality of welds, qualifications of welders and methods used in correcting welded work.

B. Welded stud connectors shall be installed in accordance with AWS D1.1.

3.04 INSPECTION

A. High strength bolting will be visually inspected in accordance with AISC 348 "The 2009 RCSC Specification for Structural Joints". Rejected bolts shall be either replaced or retightened as required. In cases of disputed bolt installation, the bolts in question shall be checked by a calibrated wrench certified by an independent testing laboratory. The certification shall be at the Contractor's expense.

B. Field welds will be visually inspected in accordance with AWS Codes. Inadequate welds shall be corrected or redone as required in accordance with AWS Codes.

C. Post installed anchors shall be inspected as required by ACI 318.

3.05 CUTTING OF EMBEDDED REBAR

A. The Contractor shall not cut embedded rebar cast into structural concrete during installation of post-installed fasteners without prior approval of the Engineer.

- END OF SECTION -

SECTION 05120

STRUCTURAL STEEL

PART 1 – GENERAL

1.01 THE REQUIREMENT

A. The Contractor shall furnish all equipment, materials, and services not otherwise specified for the fabrication, delivery, unloading, handling, storing, and erection of all structural steel work as shown on the Contract Documents.

1.02 RELATED WORK SPECIFIED ELSEWHERE

A. Section 05500 - Metal Fabrications

B. Section 09900 - Painting

1.03 REFERENCED SPECIFICATIONS, CODES, AND STANDARDS

A. Without limiting the generality of other requirements of these Specifications, all Work specified herein shall conform to or exceed the requirements of the Florida Building Code, and the applicable requirements of the following documents to the extent that the provisions of such documents are not in conflict with the requirements of this Section:

1. AISC - "Code of Standard Practice for Steel Buildings and Bridges."

2. AISC – “Specification for Structural Steel Buildings.”

3. AISC – "Specification for Design Fabrication and Erection of Structural Steel for Buildings", and including the "Commentary of the AISC Specification".

4. AISC – "Specification of Structural Joints Using ASTM A325 or A490 Bolts", as published by the American Institute of Steel Construction.

5. AWS – "Structural Welding Code", AWS Article D1.1 and "Standard Qualification Procedure", as published by American Welding Society.

1.04 SUBMITTALS

A. In accordance with the procedures and requirements set forth in Section 01300 entitled "Submittals", the Contractor shall submit the following:

1. Certified Mill Test Reports

2. Affidavit of Compliance with grade specified

3. Shop Drawings

4. Certified Weld Inspection Reports

B. All Shop Drawings shall include the following:

1. Layout drawings indicating all structural shapes, sizes, and dimensions.

2. Beam and column schedules.

3. Detail drawings indicating jointing and anchoring details.

4. All steel work, framing, and details shall conform to Article 1.03 of this Section.

C. No fabrication shall be started until Shop Drawings have been approved by the Engineer.

D. Where structural design of the steel is not indicated on the Drawings, the Contractor shall submit design drawings of the steel framing, connections and anchor bolts. Such drawings shall be signed and sealed by a Professional Engineer registered in the State of Florida.

1.05 QUALITY ASSURANCE

A. Shop inspection may be required by the City at his own expense. The Contractor shall give ample notice to the Engineer prior to the beginning of any fabrication work so that inspection may be provided. The Contractor shall furnish all facilities for the inspection of materials and workmanship in the shop, and the inspectors shall be allowed free access to the necessary parts of the works. Inspectors shall have the authority to reject any materials or Work which does not meet the requirements of these Specifications. Inspection at the shop is intended as a means of facilitating the Work and avoiding errors, but is expressly understood that it will in no way relieve the Contractor from his responsibility for furnishing proper materials or workmanship under this Specification.

B. The City may engage inspectors to inspect welded connections and to perform tests and prepare test reports.

1. Ten percent of all butt and bevel welds which extend continuously for 24 inches or less will be completely tested in accordance with AWS D1.1, Part B, Radiographic Testing of Welds, Chapter 6. All butt and bevel welds which extend continuously for more than 24 inches will be spot tested at intervals not exceeding 36 inches.

2. Welds that are required by the Engineer to be corrected shall be corrected or redone and retested as directed, at the Contractor's expense and to the satisfaction of the Engineer and/or an acceptable independent testing lab.

PART 2 – PRODUCTS

2.01 MATERIAL INFORMATION

A. The term "Structural Steel" shall be as defined in the "Codes of Standard Practices for Steel Buildings and Bridges" of the American Institute of Steel Construction (AISC). Included as "Structural Steel" shall be all stiffeners, plates, sag rods and other miscellaneous metal required for a complete installation.

2.02 MATERIALS

A. Structural Steel:

1. Structural steel shall conform to Specification Section 05010 entitled "Metal Materials". Certified mill test reports or certified reports of tests made by the fabricator or a testing laboratory in accordance with ASTM A6 and the governing specification shall constitute evidence of conformity with the above ASTM specification. Additionally, the fabricator shall, if requested, provide an affidavit stating that the structural steel furnished meets the requirements of the grade specified. Unidentified steel, if free from surface imperfections, may be used for parts of minor importance or for unimportant details where the precise physical properties of the steel and its weld-ability would not affect the strength of the structure. All other unidentified steel will be rejected and shall be removed from the site and replaced by the Contractor, all at the expense of the Contractor.

2. Structural steel shall be cleaned and coated with a shop paint primer; except, that primer shall be omitted for surfaces to be galvanized with no further coating. Surface preparation and primer shall be as specified in Section 09900 entitled "Painting". Shop prime coat shall be applied within eight hours after surface preparation. Shop applied primers shall be as specified in Section 09900 entitled "Painting".

B. Bolts: All fasteners are specified in Section 05050 entitled "Metal Fastening".

C. Rivet Steel: Rivet steel shall conform to the following Specification, Structural Rivet Steel, ASTM A502-1. Certified mill test reports shall constitute sufficient evidence of conformity with the Specifications.

D. Anchor Bolts: Anchor bolts for structural steel shall be of the size and configuration shown on the Drawings and shall conform to Section 05050 entitled "Metal Fastening".

E. Filler Metal for Welding: Welding electrodes for manual shielded metal arc welding shall conform to the Specifications for Mild Steel Covered Arc-Welding Electrodes, AWS A5.1. Bare electrodes and granular flux for the submerged-arc process shall conform to AWS-A5.17 as required for the conditions of actual use.

PART 3 – EXECUTION

3.01 MEASUREMENT

A. The Contractor shall verify all dimensions and shall make any field measurements necessary and shall be fully responsible for accuracy and layout of Work. The Contractor shall review the Drawings and any discrepancies shall be reported to the Engineer for clarification prior to starting fabrication.

3.02 FABRICATION

A. General: Fabrication shall be in accordance with the American Institute for Steel Construction "Specification for the Design, Fabrication and Erection of Structural Steel for Buildings" of the AISC.

B. Anchor Bolts:

1. All anchor bolts for structural steel erection and other incidental items of the structural steel required to be built into concrete shall be properly set and securely held in position in the forms before the concrete is placed.

2. Anchor bolts and setting plans for steel columns shall be provided at the site, marked or tagged for ready identification.

3. Bolts shall be accurately set to template and at elevation to provide suitable projection above concrete and/or grout. Maximum tolerances allowable from indicated locations are: (tolerances may be tighter for manufactured/fabricated elements of work):

   a. Elevation of concrete before grouting: + 1/4 inch.

   b. Elevation of top of anchor bolts: + 1/2 inch to 0 inch under.

   c. Line of anchor bolt: + 1/8 inch.

4. All holes in structural steel members required for anchors, anchor bolts, bolt holes, sag rods for securing wood or other members or for passing of other work noted on the drawings shall be provided by the fabricator and detailed on the Shop Drawings.

5. Where misalignment between anchor bolts and bolt holes in steel members are encountered, the Engineer shall be immediately notified. The Contractor shall submit a method to remedy the misalignment for review by the Engineer.

C. Material

1. All materials shall be properly worked and match-marked for field assembly. Where finishing is required, assembly shall be completed including bolting and welding of units before start of finishing operations.

3.03 ERECTION

A. The erection of all structural steel shall conform to the applicable requirements of the current edition of the "Specifications for the Design, Fabrication and Erection of Structural Steel for Buildings" of the ASIC. All temporary bracing, guys and bolts as may be necessary to ensure the safety of the structure until the permanent connections have been made shall be provided by the Contractor. High strength steel bolts shall conform to the Specifications of the Research Council on Riveted and Bolted Structural Joints of the Engineering Foundation for "Structural Joints using ASTM A325 or A490 Bolts".

B. Except where otherwise noted on the Drawings or in this Specification, all shop connections shall be welded. All field connections shall be accurately fitted up before being bolted. Drifting shall be only such as will bring the parts into position and shall not be sufficient to enlarge the holes or to distort the metal. All unfair holes shall be drilled or reamed.

C. High Strength Steel Bolts:

1. All bolted connections with high strength bolts shall use Direct Tension Indicator

Devised in accordance with Paragraph 8(d)(4) of the "Specification for Structural Joints using ASTM A325 or A490 Bolts", approved by the Research Council on Structural Connections, November 13, 1985. High strength bolts shall be installed in properly aligned holes and tightened to at least the minimum tension specified in the table below. Alternately, calibrated wrench tightened may be used in lieu of Direct Tension Devices provided the requirements of Paragraph 8(d)(2) of the same Specification are met.

2. Fastener tension required for connections subject to direct tension:

	Minimum Tension in 1000's of Pounds (kips)	
Nominal Bolt Size (Inches)	**A325 Bolts**	**A490 Bolts**
1/2	12	15
5/8	19	24
3/4	28	35
7/8	39	49
1	51	64
1-1/8	56	80
1-1/4	71	102
1-3/8	85	121
1-1/2	103	148

3. Wrenches may be manual torque or power wrenches designed by the manufacturer for use with high strength bolts. If manual torque wrenches are used, their dials shall be calibrated on the job. If power wrenches are used, the manufacturer's recommendations shall be carefully followed and proper working conditions of the machine demonstrated before the work is started.

4. The Engineer may review the procedure for calibration of wrenches and installation of bolts and, in general, shall satisfy himself that all requirements of the Specifications for "Structural Joints using ASTM A325 or A490 Bolts" are met.

D. Cutting and Burning

1. The use of gas cutting torch in the field for correcting fabrication errors will not be permitted on any major member in the structural framing. Its use may be permitted on minor members if the member is not under stress, and then only after the written acceptance of the Engineer has been obtained. No cutting of structural steel members in the field will be allowed except by the written acceptance by the Engineer.

2. Holes shall be provided per AISC Specifications, or as indicated for securing other Work to structural steel framing and for the passage of other Work through steel framing members. Threaded nuts shall be welded to framing, and other specialty items, as shown, to receive other Work. No torch cut hoes will be permitted.

E. Grouting of Base Plates and Bearing Plates

1. All loose column base plates and billets shall be accurately set to the designated levels on steel wedges or angle screens in preparation for grouting under this Contract. Leveling plates grouted in place shall be installed under all structural steel columns.

2. Prior to the placement of non-shrink epoxy grout beneath base and bearing plates, the bottom surface of the plates shall be cleaned of all foreign materials, and concrete and masonry bearing surface shall also be cleaned of all foreign materials and roughened to improve bonding.

3. Anchor bolts shall be tightened after the supported members have been positioned and plumbed and the non-shrink grout has attained its specified strength.

4. Baseplates shall be grouted with non-shrink epoxy grout to assure full uniform bearing. Grouting shall be done prior to placing loads on the structure.

F. Welding

1. Welding, where required, shall be performed in accordance with the requirements of the AWS - Structural Welding Code. All shop and field welds in structural steel shall be visually inspected by an AWS qualified welding inspector. The Contractor shall furnish a letter of certification for each welded connection stating that these requirements have been met.

2. In assembly and during welding the component parts of built-up work shall be held in place by sufficient clamps, temporary bolts or other adequate means to keep parts in proper position. Where temporary bolts are used, to hold the parts together in steel plates or similar work the temporary bolts shall be removed and the holes shall be filled with welding material where practical. Otherwise, the nuts shall be tightened and the bolt threads outside the unit shall be burned and the bolt opened to prevent the nut from loosening.

G. Misfits at Bolted Connections:

1. Where misfits in erection bolting are encountered, the Engineer shall be immediately notified. The Contractor shall submit a method to remedy the misfit for review by the Engineer. The Engineer will determine whether the remedy is acceptable or if the member must be refabricated.

2. Incorrectly sized or misaligned holes in members shall not be enlarged by burning or by the use of drift pins. The Contractor shall notify the Engineer immediately and shall submit a proposed method of remedy for review by the Engineer.

3.04 FIELD ASSEMBLY

A. Structural frames shall be set accurately to the lines and elevations indicated. The various members shall be aligned and adjusted to form a part of a complete frame or structure before permanently fastened. Bearing surfaces and other surfaces which will be in permanent contact shall be cleaned before assembly. Necessary adjustments to compensate for discrepancies in elevations and alignments shall be performed.

B. Individual members of the structure shall be leveled and plumbed within specified AISC tolerances. The Contractor shall provide and install all temporary bracing required until structure is complete.

3.05 PRODUCT DELIVERY, STORAGE AND HANDLING

A. Structural members shall be loaded in such a manner that they may be transported and unloaded without being over-stressed, deformed or otherwise damaged.

B. Structural steel members and packaged materials shall be protected from corrosion and deterioration. Material shall be stored in a dry area and shall not be placed in direct contact with the ground. Materials shall not be placed on the structure in a manner that might cause distortion or damage to the members or the supporting structures. Repair or replace damaged materials or structures as directed.

3.06 PAINTING

A. General Requirements

1. Steel work which will be encased in concrete shall not be painted, and all other steel work that is not to be galvanized shall be given one prime coat and one coat of shop paint before shipment to the field as specified under Section 09900 entitled "Painting". Steel work to be encased in concrete shall have all loose rust and scale removed by wire brushing or other methods as accepted by the Engineer prior to encasement.

2. After inspection and acceptance and before leaving the shop, all steel work specified to be painted shall be sand blasted or wheelabrated by the fabricator, of loose mill scale, loose rust, weld slag or flux deposit, dirt and other foreign matter to satisfy the following requirements of the Steel Structures Painting Council: Specification (SSPC), SP-6 NACE 3 for all steel except immersion service; for all steel in immersion service, SSPC-SP-5 NACE1.

3. Cleaned metal shall be primed or pretreated within six hours after cleaning to prevent new rust forming.

B. Contact Surfaces: Contact surfaces shall be cleaned and primed in accordance with Item A of this Section but shall not be painted.

C. Finished Surfaces: Machine finished surfaces shall be protected against corrosion by rust-inhibiting coating that can be easily removed prior to erection or which has characteristics that make removal unnecessary prior to erection.

D. Surfaces Adjacent to Field Welds: Surfaces within 2 inches of an field weld location shall be free of materials that would prevent proper welding or produce objectionable fumes while welding is being done.

E. Painting Schedule

1. After erection of the structural steel and miscellaneous steel is complete, the Contractor shall touch up all abrasions in the shop coat and shall spot paint all field rivets, field bolts and field welds with the paint and procedure specified in Section 09900 entitled "Painting".

2. All painting performed at the fabricator's shop shall be subject to inspection by the City or his representative. All parts of the Work shall be made accessible to the City or his representative. The Contractor shall correct such work as found defective under this Section of the Specification.

3. Field cuts on galvanized steel shall be wire brushed and coated with Carbomastic 15, Carboline Co., or equal, to a thickness of 4 to 6 mils.

- END OF SECTION -

SECTION 05140

STRUCTURAL ALUMINUM

PART 1 – GENERAL

1.01 THE REQUIREMENT

A. The Contractor shall furnish all equipment, labor, materials, and services required to provide all structural aluminum work in accordance with the Contract Documents. The term "structural aluminum" shall include items as defined in the Aluminum Association "Specifications for Aluminum Structures".

1.02 RELATED WORK SPECIFIED ELSEWHERE

A. Section 05010 - Metal Materials

B. Section 05050 - Metal Fastening

1.03 REFERENCE SPECIFICATIONS, CODES, AND STANDARDS

A. Without limiting the generality of other requirements of the Specifications, all work specified herein shall conform to the applicable requirements of the following documents. All referenced specifications, codes, and standards refer to the most current issue available at the time of the Bid.

1. Florida Building Code
2. Aluminum Association "Specifications for Aluminum Structures"
3. AWS D1.2 - "Structural Welding Code".

1.04 SUBMITTALS

A. Submit the following in accordance with Section 01300 entitled "Submittals".

1. Certified Mill Test Reports
2. Affidavit of Compliance with grade specified
3. Shop Drawings which include the following:
   a. Layout drawings indicating all structural shapes, sizes, and dimensions.
   b. Beam and column schedules.
   c. Detailed drawings indicating jointing, anchoring and connection details.

B. Where structural design of the aluminum is not indicated on the Drawings, the Contractor shall submit design drawings of the aluminum framing, connections and anchor bolts.

Such drawings shall be signed and sealed by a Professional Engineer registered in the State of Florida.

1.05 QUALITY ASSURANCE

A. Shop inspection may be required by the City at its own expense. The Contractor shall give ample notice to the Engineer prior to the beginning of any fabrication work so that inspection may be provided. The Contractor shall furnish all facilities for the inspection of materials and workmanship in the shop, and the inspectors shall be allowed free access to the necessary parts of the work. Inspectors shall have the authority to reject any materials or work which do not meet the requirements of these Specifications. Inspection at the shop is intended as a means of facilitating the work and avoiding errors, but is expressly understood that it will in no way relieve the Contractor from its responsibility for furnishing proper materials or workmanship under this Specification.

PART 2 – PRODUCTS

2.01 MATERIALS

A. Structural aluminum shall comply with Section 05010 entitled "Metal Materials".

B. Fasteners for structural aluminum shall be in accordance with Section 05050 entitled "Metal Fastening". Fasteners shall be Type 316 stainless steel.

C. Electrodes for welding shall be in accordance with Section 05050 entitled "Metal Fastening".

PART 3 – EXECUTION

3.01 MEASUREMENT

A. The Contractor shall verify all dimensions and shall make any field measurements necessary and shall be fully responsible for accuracy and layout of work. The Contractor shall review the Drawings and any discrepancies shall be reported to the Engineer for clarification prior to starting fabrication.

3.02 FABRICATION

A. Fabrication shall be in accordance with the Aluminum Association "Specifications for Aluminum Structures". Fabrication shall begin only after Shop Drawing approval.

B. Except where otherwise noted on the Drawings or in this Specification, all shop connections shall be welded.

C. All holes in structural aluminum members required for anchors, anchor bolts, bolt holes, or other members or for attachment of other work shall be provided by the fabricator and detailed on the Shop Drawings.

D. All materials shall be properly worked and match-marked for field assembly.

3.03 DELIVERY, STORAGE AND HANDLING

A. Structural members shall be loaded in such a manner that they may be transported and unloaded without being over-stressed, deformed or otherwise damaged.

B. Structural aluminum members and packaged materials shall be protected from corrosion and deterioration. Material shall be stored in a dry area and shall not be placed in direct contact with the ground. Materials shall not be placed on the structure in a manner that might cause distortion or damage to the members or the supporting structures. The Contractor shall repair or replace damaged materials or structures as directed.

3.04 ERECTION

A. All temporary bracing, guys and bolts as may be necessary to ensure the safety of the structure until the permanent connections have been made shall be provided by the Contractor.

B. Structural members shall be set accurately to the lines and elevations indicated. The various members shall be aligned and adjusted to form a part of a complete frame or structure before being permanently fastened. A licensed civil engineer shall survey the structural aluminum during erection and shall provide a final survey indicating elevations and locations of all major members. Necessary adjustments to compensate for discrepancies in elevations and alignments shall be performed.

C. No cutting of structural aluminum members in the field will be allowed except by the written approval of the Engineer.

D. Bearing surfaces and other surfaces which will be in permanent contact shall be cleaned before assembly.

E. Field welding shall not be permitted unless specifically indicated in the Drawings or approved in writing by the Engineer. All field welding shall comply with Section 05050 entitled "Metal Fastening".

F. All bolted connections shall comply with Section 05050 entitled "Metal Fastening".

G. All field connections shall be accurately fitted up before being bolted. Drifting shall be only such as will bring the parts into position and shall not be sufficient to enlarge the holes or to distort the metal. All unfair holes shall be drilled or reamed.

H. Misfits at Bolted Connections

1. Where misfits in erection bolting are encountered, the Engineer shall be immediately notified. The Contractor shall submit a method to remedy the misfit for review by the Engineer. The Engineer will determine whether the remedy is acceptable or if the member must be refabricated.

2. Incorrectly sized or misaligned holes in members shall not be enlarged by burning or by the use of drift pins. The Contractor shall notify the Engineer immediately and shall submit a proposed method of remedy for review by the Engineer.

3. Where misalignment between anchor bolts and bolt holes in aluminum members are encountered, the Engineer shall be immediately notified. The Contractor shall submit a method to remedy the misalignment for review by the Engineer.

I. Grouting of Base Plates and Bearing Plates

1. The bottom surface of the plates shall be cleaned of all foreign materials, and concrete or masonry bearing surface shall be cleaned of all foreign materials and roughened to improve bonding.

2. Accurately set all base and bearing plates to designated levels with steel wedges or leveling plates.

3. Baseplates shall be grouted with non-shrink epoxy grout to assure full uniform bearing. Grouting shall be done prior to placing loads on the structure. Non-shrink epoxy grout shall conform to Section 03315 entitled "Grout".

4. Anchor bolts shall be tightened after the supported members have been positioned and plumbed and the non-shrink grout has attained its specified strength.

J. Where finishing is required, assembly shall be completed including bolting and welding of units before start of finishing operations.

K. All aluminum surfaces in contact with concrete shall be given a heavy coat of bituminous paint. Aluminum surfaces in contact with other metals shall be properly isolated.

3.05 FINISHES

A. Structural aluminum shall be furnished mill finished unless noted otherwise. Anodized finish shall be furnished where noted on the Drawings.

- END OF SECTION -

SECTION 05500

METAL FABRICATIONS

PART 1 – GENERAL

1.01 THE REQUIREMENT

A. The Contractor shall furnish all materials, labor, and equipment required to provide all metal fabrications not specifically included in other Sections, complete and in accordance with the requirements of the Contract Documents.

B. Work shall include but may not be limited to lintels, guard posts (bollards), hoppers, and chutes.

1.02 RELATED WORK SPECIFIED ELSEWHERE

A. Section 05035 - Galvanizing

B. Section 05050 - Metal Fastening

C. Section 09900 - Painting

D. Certain specific items are included in other Sections of the Specifications. See the section for the specific item in question.

1.03 REFERENCE SPECIFICATIONS, CODES, AND STANDARDS

A. Without limiting the generality of other requirements of these Specifications, all work specified herein shall conform to or exceed the requirements of the Florida Building Code and the applicable requirements of the following documents to the extent that the provisions of such documents are not in conflict with the requirements of this Section:

1. Florida Building Code

2. American Institute of Steel Construction (AISC) "Specifications for the Design, Fabrication, and Erection of Structural Steel for Buildings" and "Commentary on the AISC Specification."

3. American Iron and Steel Institute (AISI) "Specifications for the Design of Cold-Formed Steel Structural Members" and "Commentary on the AISI Specification."

4. Occupational Safety and Health Administration (OSHA) Regulations.

5. Aluminum Association "Specifications for Aluminum Structures" and "Engineering Data for Aluminum Structures."

1.04 SUBMITTALS

A. Submit the following in accordance with Section 01300, Submittals.

1. Complete fabrication and erection drawings of all metalwork specified herein.

2. Other submittals as required in accordance with Section 05010, Metal Materials, and Section 05050, Metal Fastening.

PART 2 – PRODUCTS

2.01 METAL MATERIALS

A. Materials are specified in Section 05010 entitled "Metal Materials".

2.02 METAL FASTENING

A. All welds and fasteners used in metal fabrication shall conform to Section 05050, Metal Fastening, unless noted otherwise.

2.03 LINTELS

A. Where metal lintels are shown on the Drawings, provide lintels as specified herein with 8 inches minimum bearing each side unless noted otherwise.

B. All metal lintels shall be steel in accordance with Section 05120, Structural Steel, and shall be galvanized in accordance with Section 05035, Galvanizing, unless noted otherwise.

2.04 GUARD POSTS (BOLLARDS)

A. Guard posts shall be as detailed on the Drawings, including plastic covers, pipe sleeves, concrete fill, crushed fill and grouting to secure parts. If not indicated on the Drawings, guard posts shall be minimum 6-inch diameter steel pipe. Pipe for guards shall be galvanized steel, Schedule 40 pipe that conforms to ASTM A53. Painting shall be in accordance with Section 09900 entitled "Painting".

B. Guard posts shall be concrete filled and crowned, as detailed on the Drawings.

PART 3 – EXECUTION

3.01 FABRICATION

A. All measurements and dimensions shall be based on field conditions and shall be verified by the Contractor prior to fabrication. Such verification shall include coordination with adjoining work.

B. All fabricated work shall be shop fitted together as much as practicable, and delivered to the field, complete and ready for erection. All miscellaneous items such as stiffeners, fillets, connections, brackets, and other details necessary for a complete installation shall be provided.

C. All work shall be fabricated and installed in a manner that will provide for expansion and contraction, prevent shearing of bolts, screws, and other fastenings, ensure rigidity, and provide a close fit of sections.

D. Finished members shall conform to the lines, angles, and curves shown on the Drawings and shall be free from distortions of any kind.

E. All shearings shall be neat and accurate, with parts exposed to view neatly finished. Flame cutting is allowed only when performed utilizing a machine.

F. All shop connections shall be welded unless otherwise indicated on the Drawings or specified herein. Bolts and welds shall conform to Section 05050, Metal Fastening. All fastenings shall be concealed where practicable.

G. Fabricated items shall be shop painted when specified in Section 09900, Painting.

3.02 INSTALLATION

A. Assembly and installation of fabricated system components shall be performed in strict accordance with manufacturer's recommendations.

B. All miscellaneous metalwork shall be erected square, plumb and true, accurately fitted, adequately anchored in place, and set at proper elevations and positions

C. Metal work shall be field painted when as specified in accordance with Section 09900, Painting.

- END OF SECTION -

SECTION 05510

METAL STAIRS

PART 1 – GENERAL

1.01 THE REQUIREMENT

A. The Contractor shall furnish all materials, labor, and equipment required to provide all metal stairs in accordance with the Contract Documents.

1.02 RELATED WORK SPECIFIED ELSEWHERE

A. Section 05010 - Metal Materials

B. Section 05050 - Metal Fastening

C. Section 05140 - Structural Aluminum

D. Section 05520 - Handrails and Railings

E. Section 05531 - Gratings, Floor Plates and Access Hatches

1.03 REFERENCE SPECIFICATIONS, CODES, AND STANDARDS

A. Without limiting the generality of the other requirements of the specifications, all work herein shall conform to the applicable requirements of the following documents. All referenced specifications, codes, and standards refer to the most current issue available at the time of Bid.

1. Florida Building Code
2. AISC — Specification for Structural Steel Buildings
3. AISI — Specification for the Design of Cold-Formed Steel Structural Members
4. Aluminum Association — Specifications for Aluminum Structures

1.04 SUBMITTALS

A. Submit the following in accordance with Section 01300 entitled "Submittals".

1. Complete fabrication and erection drawings of all metal work specified herein.
2. Other submittals as required in accordance with Section 05010 entitled "Metal Materials" and Section 05050 entitled "Metal Fastening".

PART 2 – PRODUCTS

2.01 METAL MATERIALS

A. Metal materials used for metal stairs shall conform to Section 05010 entitled "Metal Materials", unless noted otherwise.

2.02 METAL FASTENING

A. All welds and fasteners used in metal stairs shall conform to Section 05050 entitled "Metal Fastening", unless noted otherwise.

2.03 METAL STAIRS AND LANDINGS

A. Stair stringers and structural framing of landings shall be fabricated from aluminum as indicated on the Drawings.

1. Aluminum stairs shall be fabricated from aluminum alloy 6061-T6 in accordance with Section 05140 entitled "Structural Aluminum".

B. Regardless of material of stringers, all stair treads shall be aluminum.

C. Where metal landings are required as indicated on the Drawings, gratings at landings shall conform to Section 05531 entitled "Grating, Floor Plates, and Access Hatches".

D. Handrails for metal stairs shall conform to Section 05520 entitled "Handrails and Railings". Contractor shall coordinate attachment of handrails to metal stairs.

E. All clips, anchors, and necessary appurtenances shall be provided for a complete and rigid installation.

F. Closure plates shall be provided for all exposed ends of stringers.

G. All exposed connections shall be welded and ground smooth, unless otherwise indicated on the Drawings.

H. Stairs and landings shall be designed to support a 100 psf live load, minimum, unless otherwise indicated on the Drawings.

2.04 STAIR TREADS

A. Stair treads shall be fabricated of grating sections identical to walkways and landings.

B. An abrasive nosing shall be provided at the edge of stair tread.

C. Stair tread shall be fabricated in accordance with the details shown on the Drawings.

D. Treads shall be attached to stringers with Type 316 stainless steel bolts and nuts. Connection angles shall be of aluminum construction.

2.05 SAFETY STAIR NOSINGS

A. Abrasive cast aluminum, safety stair nosings shall be provided on all concrete or concrete filled steel pan stairs, including the top stair of metal stairs that attach to concrete, and as shown on the Drawings unless noted otherwise.

B. Nosing shall be 3 inches wide and shall extend the full width of the stairway minus 3 inches on either side. Nosing shall be cast into the concrete and held in place with butterfly type extruded anchors.

C. The nosing shall be "Style 231-A", by Amstep Products, “Alumogrit Type 101", by Wooster Products, Inc., "Type AX", by Safe-T-Metal Company. For steel pan concrete filled stairs, nosing shall be "Type 101-SP", Wooster Products, Inc., or "Type AXPE", by Safe-T-Metal Company. For pan stairs, nosing shall be continuous over corner of stair treads to fully protect corner of treads from abrasion. All exposed fasteners shall be Type 304 stainless steel.

2.06 STEEL PAN STAIRS

A. General

1. All steel stairs and landings with concrete filled steel pan risers and treads shall meet all applicable OSHA, ANSI, and NFPA codes.

2. Stair assemblies shall conform to the dimensions and arrangements shown on the Drawings.

3. Stair assemblies shall be designed to support a minimum 100 psf live load unless otherwise indicated on the Drawings.

4. Steel framing, hangers, columns, struts, clips, brackets, bearing plates, and other necessary appurtenances shall be provided for support of stairs and platforms as shown on the Drawings.

5. Exposed portions of steel pans, platforms, framing system stringers, and portions of aluminum nosings in contact with concrete, steel, or masonry shall be painted in accordance with Section 09900, Painting.

6. Concrete fill shall be 3-inches thick for platforms and 1-1/2 inches thick for pan treads.

7. Metal pan treads, platforms, and risers shall be fabricated from 0.1084-inch thick (12 gauge minimum), galvanized structural steel sheets.

8. Risers and treads shall be supported by steel angle brackets welded to the stringers. Metal pans shall be secured to the brackets with welds.

9. Closure pieces shall be provided for ends of stringers.

B. Connections

1. All connections shall be welded unless otherwise shown on the Drawings or specified herein. All welds shall be continuous and ground smooth where exposed. Welding shall conform to Section 05050, Metal Fastening.

2. Assemblies shall be fabricated such that bolts and other fastenings do not appear on finished surfaces.

3. All joints shall be true and tight, and connections between parts shall be light-proof tight.

C. Handrails for steel pan stairs shall conform to Section 05520, Handrails and Railings. Contractor shall coordinate connection of handrails to stairs.

PART 3 – EXECUTION

3.01 FABRICATION

A. All measurements and dimensions shall be based on field conditions and shall be verified by the Contractor prior to fabrication. Such verification shall include coordination with all adjoining work.

B. All fabricated work shall be shop fitted together as much as practicable, and delivered to the field, complete and ready for erection. All miscellaneous items such as stiffeners, fillets, connections, brackets, and other details necessary for a complete installation shall be provided.

C. All work shall be fabricated and installed in a manner that will provide for expansion and contraction, prevent shearing of bolts, screws, and other fastenings, ensure rigidity, and provide a close fit of sections.

D. Finished members shall conform to the lines, angles, and curves shown on the drawings and shall be free from distortions of any kind.

E. All shearings shall be neat and accurate, with parts exposed to view neatly finished. Flame cutting is allowed only when performed utilizing a machine.

F. All shop connections shall be welded unless otherwise indicated on the Drawings or specified herein. Bolts and welds shall conform to Section 05050, Metal Fastening. All fastenings shall be concealed where practicable.

3.02 INSTALLATION

A. Assembly and installation of metal stairs shall be performed in strict accordance with manufacturer's recommendations.

B. All miscellaneous metalwork shall be erected square, plumb and true, accurately fitted, adequately anchored in place, and set at proper elevations and positions.

- END OF SECTION -

SECTION 05515

LADDERS

PART 1 – GENERAL

1.01 REQUIREMENT

A. The Contractor shall furnish all materials, labor, and equipment required to provide all ladders in accordance with the requirements of the Contract Documents.

1.02 RELATED WORK SPECIFIED ELSEWHERE

A. Section 05010 – Metal Materials

B. Section 05500 – Metal Fabrications

C. Section 05520 – Handrails and Railings

1.03 REFERENCE SPECIFICATIONS, CODES AND STANDARDS

A. Without limiting the generality of the Specifications, all work specified herein shall conform to the applicable requirements of the following documents.

1. Florida Building Code (FBC)
2. Aluminum Association Specifications for Aluminum Structures
3. Occupational Safety and Health Administration (OSHA) Regulations

1.04 SUBMITTALS

A. Submit the following in accordance with Section 01300 entitled "Submittals".

1. Complete fabrication and erection drawings of all metalwork specified herein.
2. Other submittals as required in accordance with Section 05500 entitled "Metal Fabrications".

PART 2 – PRODUCTS

2.01 METAL MATERIALS

A. Metal materials, fasteners and welds used for ladders shall conform to Section 05010 entitled "Metal Materials", unless noted otherwise.

2.02 VERTICAL LADDERS

A. Ladders shall be furnished with all mounting brackets, baseplates, fasteners, and necessary appurtenances for a complete and rigid installation.

B. All ladders shall be aluminum alloy 6061-T6 or 6063-T5 with a clear, anodized finish, Aluminum Association M12C22A41, unless noted otherwise.

C. All ladders shall conform to dimensions indicated on the Drawings and shall comply with OSHA requirements.

D. Side rails shall be 2-1/2 inch x 3/8 inch runners.

E. Rungs shall be solid serrated 3/4-inch diameter, minimum.

F. All exposed connections shall be welded and ground smooth.

G. All fixed ladders terminating below a roof, floor or wall shall be provided with Bilco Model 2 Ladder Up Safety Posts, or equal. The safety post system components shall be suitable for service in a corrosive environment. The safety posts shall be manufactured of high strength, hot dip galvanized steel with telescoping tubular sections that lock automatically when fully extended. Upward and downward movement shall be controlled by a stainless steel spring balancing mechanism. The safety posts shall be completely assembled with fasteners for securing to the ladder rungs in accordance with the manufacturer's recommendations.

2.03 SAFETY CAGE

A. For ladders exceeding twenty four feet in height, provide a safety cage in accordance with OSHA requirements.

B. Safety cages shall be fabricated of 1/4-inch aluminum plates designed to meet OSHA requirements.

C. An operable access door with padlock shall be provided for all safety cages.

2.04 FALL PREVENTION SYSTEM

A. Ladders with an uninterrupted length exceeding 24 ft shall be installed with a fall prevention system, unless indicated otherwise on the drawings.

B. Fall prevention system shall comply with OSHA requirements.

C. Fall prevention system shall include all necessary components to provide a fully operational system, including one full body safety harness with a 310 lb. weight capacity for each fall prevention system. System shall have a fall locking device, impact attenuator, and rail system. Rail extension with dismounting system, which allows detachment from the system while not standing on the ladder, shall be provided for ladders accessed thru hatch openings. All components shall be stainless steel with a non-metallic cable guide.

D. Fall Prevention Systems shall be RTC 2000 Climb-Rite System, Sellstrom Manufacturing Company, or Saf-T-Climb Fall Prevention System, Norton by Honeywell.

PART 3 – EXECUTION

3.01 FABRICATION

A. All measurements and dimensions shall be based on field conditions and shall be verified by the Contractor prior to fabrication. Such verification shall include coordination with adjoining work.

B. All fabricated work shall be shop fitted together as much as practicable, and delivered to the field, complete and ready for erection.

C. All work shall be fabricated and installed in a manner that will provide for expansion and contraction, prevent shearing of bolts, screws, and other fastenings, ensure rigidity, and provide a close fit of sections.

D. Finished members shall conform to the lines, angles, and curves shown on the Drawings and shall be free from distortions of any kind.

E. All shearings shall be neat and accurate, with parts exposed to view neatly finished. Flame cutting is allowed only when performed utilizing a machine.

F. All shop connections shall be welded unless otherwise indicated on the Drawings or specified herein. All fastenings shall be concealed where practicable.

G. Fabricated items shall be shop painted when specified in accordance with Section 09900 entitled "Painting".

3.02 INSTALLATION

A. Assembly and installation of fabricated system components shall be performed in strict accordance with manufacturer's recommendations.

B. All ladders shall be erected square, plumb and true, accurately fitted, adequately anchored in place, and set at proper elevations and positions.

C. Metalwork shall be field painted when specified in accordance with Section 09900 entitled "Painting".

- END OF SECTION -

SECTION 05520

HANDRAILS AND RAILINGS

PART 1 – GENERAL

1.01 THE REQUIREMENT

A. The Contractor shall furnish, fabricate, and install handrails and railings and appurtenances, complete, all in accordance with the requirements of the Contract Documents.

1.02 RELATED WORK SPECIFIED ELSEWHERE

A. Section 05010 - Metal Materials

B. Section 05500 - Metal Fabrications

C. Section 05510 - Metal Stairs

1.03 SUBMITTALS

A. Shop drawings of all handrails and railings shall be submitted to the Engineer for review in accordance with Section 01300 entitled "Submittals."

PART 2 – PRODUCTS

2.01 ALUMINUM RAILING SYSTEM

A. General: Where indicated on the Drawings, pipe handrailing shall be provided. Pipe handrailing shall be supplied as required by the Florida Building Code and OSHA whether indicated on the Drawings or not.

B. Vertical pipe supports shall include cast aluminum base flange or side mount bracket with set screws as indicated on Drawings. Removable posts shall be sleeved. Cast aluminum base flanges and side mount brackets shall be as manufactured by Thompson Fabricating Inc., Hollaender Manufacturing Inc., or equal.

C. Wall brackets for handrail shall be of designs indicated on the Drawings and shall be as manufactured by Mouitrie Manufacturing Company, J.G. Braun Company, Fulton Metal Products Company, or equal.

D. All connections between vertical posts and horizontal railing or between sections of horizontal railings shall be shop welded continuous in as long of sections as practical. Tack welds shall not be accepted. All welds shall be water tight and ground smooth. Field assembly of welded sections may be made by mechanical fasteners. Location and type of field connections shall be subject to the Engineer's review. Weep holes shall be shop drilled in all vertical posts of external railing.

E. Design Load: All components of the railings and the railing system shall be adequately designed to resist the design loads of the Florida Building Code. In no case shall the spacing of vertical pipe supports exceed five feet.

F. Aluminum Railing: Railing Posts shall be nominal 2 inch nominal diameter, Schedule 80 (minimum) aluminum alloy 6061 T6. Horizontal railing shall be 1-1/2 inch nominal diameter, Schedule 40 (minimum) aluminum pipe sections. Stainless steel railing may be used in lieu of aluminum railing at the Contractor's option at no additional cost to the City.

G. Kickplates: Kickplates shall be furnished and installed typically at the edges of all walkways and at other handrail installations. Kickplates shall be an extrusion that attaches to the posts with clamps that will allow for expansion and contraction between posts, must meet OSHA requirements, shall project 4 inches above walkway surface, shall be set ¼-inch above the walking surface, may not infringe on minimum required walkway width and must be of the same material as that of the handrail construction.

H. Expansion joint splices shall be provided at 30 feet maximum spacing and at all expansion joints in the structure supporting the handrail. Material for the expansion joint shall be the same as railing material.

I. Finish: Aluminum railings and posts shall be provided with a clear anodized finish (215 R1).

2.02 FASTENERS

A. Fasteners when required or specified shall be Type 316 stainless steel.

PART 3 – EXECUTION

3.01 EXAMINATION

A. Verify that field conditions are acceptable and are ready to receive work.

B. Beginning of installation means erector accepts existing conditions.

3.02 PREPARATION

A. Clean and strip primed items to bare metals where site welding is required.

B. Supply items required to be cast into concrete with setting templates, to appropriate sections.

3.03 INSTALLATION

A. Install items plumb and level, accurately fitted, free from distortion or defects.

B. Provide anchors and plates required for connecting railings to structure.

C. Aluminum Railings: Aluminum railing fabrication shall be performed by craftsmen experienced in the fabrication of architectural metal work. Exposed surfaces shall be free from defects or other surface blemishes. Dimensions and conditions shall be verified in

the field. All joints, junctions, miters and butting sections shall be precision fitted with no gaps occurring between sections, and with all surfaces flush and aligned. Electrolysis protection of materials shall be provided. All dissimilar materials shall be isolated.

3.04 EXPANSION BOLTS

A. Expansion bolts shall be spaced 10d apart and 6d edge distance (d=diameter of bolt). A safety factor of four shall be provided on expansion bolt pull out values published by the manufacturer.

3.05 ALUMINUM SURFACES

A. Aluminum surfaces in contact with concrete, grout or dissimilar metals shall be protected with a coat of bitumastic or other approved materials.

- END OF SECTION -

SECTION 05531

GRATING, FLOOR PLATES AND ACCESS HATCHES

PART 1 – GENERAL

1.01 THE REQUIREMENT

A. The Contractor shall furnish, fabricate, and install gratings, floor plates, access hatches and appurtenances, complete, all in accordance with the requirements of the Contract Documents.

1.02 RELATED WORK SPECIFIED ELSEWHERE

A. Section 05010 – Metal Materials

B. Section 05035 - Galvanizing

C. Section 05050 – Metal Fastening

D. Painting and protective coating of metalwork and fabricated items shall, unless otherwise specified herein, be performed in accordance with the requirements of the Section entitled "Painting."

1.03 REFERENCE SPECIFICATIONS, CODES, AND STANDARDS

A. Specifications, codes and standards shall be as specified in Section 05010 entitled "Metal Materials" and as referred to herein.

1.04 SUBMITTALS

A. Submit the following in accordance with the Section entitled “Submittals”:

1. Complete fabrication and erection drawings of all gratings, floor plates, access hatches and access doors specified herein.

2. Other submittals as required in accordance with the Section entitled “Metal Fabrications.”

PART 2 – PRODUCTS

2.01 METAL MATERIALS

A. Metal materials used for gratings, floor plates and hatches shall conform to Section 05010 entitled “Metal Materials,” unless noted otherwise.

2.02 METAL FASTENING

A. All welds and fasteners used for gratings, floor plates and hatches shall conform to Section 05050 entitled “Metal Fastening,” unless noted otherwise.

2.03 GRATING

A. General: Grating, including support frames, fastenings, and all necessary appurtenances for a complete installation shall be furnished as indicated on the Drawings and specified herein.

1. All exposed bearing ends of grating shall be enclosed in a perimeter band of the same dimensions and materials as the main bars, including ends at all cutouts.

2. Grating shall be fabricated into easily removable sections and shall be fastened at each corner and as required with fasteners provided by the grating manufacturer. No section of grating shall weigh in excess of 50 lbs. unless noted otherwise. No fasteners shall be permitted to project above the walking surface.

3. Gratings shall be designed for a loading of 150 psf unless a depth is required by the Drawings. When grating depth is not indicated on the drawings, minimum grating depth shall be 1 ½-inches and deflection shall not exceed L/240 or ¼-inch.

4. All grating shall be furnished with holddowns.

5. Grating installed in cast-in-place concrete shall be provided with embedded support frames on all perimeter and bearing edges. Support frames shall include anchor straps or headed studs at a maximum of 18-inches on-center, a minimum of two each side. Support frames shall be fabricated from the same material as the grating.

B. Aluminum Grating

1. Aluminum grating shall be of I-Bar type and shall consist of extruded bearing bars positioned and locked by crossbars. All supports, cross members, etc. shall be aluminum. Plank clips for grating hold downs or other required attachments shall be aluminum or stainless steel. Bolts shall be stainless steel. Provide embedded aluminum support frames for cast-in-place concrete installations.

2. Grating shall be “19-SI-4 I-Bar Swage Locked” by Alabama Metal Industries Corporation (AMICO), “IB” by Harsco Industrial IKG, “I-Bar 19SGI4", by Ohio Grating Inc., or “I-Bar” by Thompson Fabricating LLC.

3. Grating shall be provided with a mill finish.

C. Aluminum Plank Grating

1. Aluminum plank grating shall be un-punched, 6-inch wide extruded section panels, heavy duty type with 6 ribs and plain sides, welded together to form panels. Panel ends shall have an extruded aluminum end bar welded in place. All support members shall be aluminum. Plank clips for grating holddowns or other required attachments,

shall be aluminum or stainless steel. Bolts shall be stainless steel. All planks shall be provided with embedded aluminum support frame for cast-in-place concrete.

2. Removable sections shall be edge banded in sections and provided with stainless steel flush mounted lift handles with necessary plank reinforcing and hold down anchors.

3. Hinged sections shall be shop fabricated ready for field installation. Panels shall be edge banded with a continuous hinge, flush mounted lifting handles (1 section minimum), stainless steel bolts and hardware. Grating frame shall be provided with removable temporary braces to maintain the required opening width during casting. Provide necessary grating reinforcing for lift handles, hinge connections, hold down anchors, etc.

4. Plank grating shall be provided with a mill finish.

5. Aluminum plank grating shall be HD-P manufactured by Harsco Industrial IKG., Heavy Duty Series manufactured by Ohio Gratings, Inc., or Unpunched Duo-Grip Extruded Series manufactured by Alabama Metal Industries Corporation (AMICO).

D. Steel Grating

1. Steel grating shall be custom welded heavy duty steel grating per ANSI/NAMM MBG 532-000. Minimum bearing bar size shall be 2¼-inch by ¼-inch. All supports, cross members, etc. shall be galvanized steel. Plank clips for grating hold downs shall be stainless steel. Bolts shall be galvanized steel.

2. All openings shall be banded.

3. Steel grating shall be galvanized according to the Section entitled “Galvanizing.”

4. Main bearing bars shall conform to ASTM A36. Cross bars shall be flush with the top of the grating.

5. Grating span shall be 36 inches maximum and shall satisfy AASHTO loading for H-20 truck.

6. Grating shall be manufactured by IKG Borden Industries, Leeds, AL or equal.

2.04 CHECKERED PLATES

A. Checkered plates shall be aluminum alloy 6061-T6, or galvanized steel as indicated on the Drawings. Aluminum checkered plates shall be provided in mill finish, except when otherwise indicated on the Drawings. Checkered plates shall be designed for a live load of 150 pounds per square foot of the gross projected area. The allowable deflection under the above loadings shall be L/240 but not more than ¼-inch. Minimum thickness shall be 3/8-inch, unless otherwise noted on the Drawings.

B. Checkered plates shall be standard pattern non-slip of the thickness and sizes on the Drawings. Stiffener angles shall be provided as required to meet the load requirements

specified above. All checkered plate sections shall be cut that no one section shall weigh more than 100 pounds.

C. Flush type lifting handles and hinges and neoprene seals for airtight construction shall be provided where shown on the Drawings.

D. At locations noted, neoprene gaskets shall be provided between floor plates and frames. Plates shall be screwed into frames when noted on the Drawings.

E. Hinges, where indicated on the Drawings, shall be heavy-duty, cadmium plated bronze with stainless steel pins and fasteners.

F. Removable Sections: Plates shall be fabricated in removable sections with weight not exceeding 60 pounds each with flush mounted handles and removable hold down stainless steel bolts.

2.05 ACCESS HATCHES

A. General

1. Door opening sizes, number and direction of swing of door leaves, and locations shall be as shown on the Drawings. The Drawings show the clear opening requirements. Door leaves shall be 1/4 inch, minimum, diamond pattern plate with an approved raised pattern, non-skid surface. Plate shall be stiffened as required to maintain allowable stress and deflection requirements. Stiffeners shall consist of angles or bars welded to the bottom of plate

2. All doors shall be aluminum (mill finish) unless otherwise noted. All doors in locations subject to direct vehicular traffic shall be galvanized steel designed for H-20 live loads.

3. Openings larger than 42 inches in either direction shall have double leaf doors.

4. Doors shall be designed for flush mounting and for easy opening from both inside and outside.

5. All doors shall be provided with an automatic hold-open arm with release handle.

6. Double leaf doors shall be provided with Type 316 stainless steel safety chains to go across the open sides of the door, when in the open position. Brackets shall be provided on the underside of the doors to hold the safety bars when not in use.

7. All hardware, including but not limited to, all parts of the latch and lifting mechanism assemblies, hold open arms and guides, brackets, hinges, springs, pins, and fasteners shall be Type 316 stainless steel.

8. All doors shall be watertight with a continuous gasket. All single door applications shall include a continuous EPDM odor reduction gasket.

9. Cylinder locks with keyway protected by a cover plug shall be provided with all hatches.

10. Door leafs shall be 1/4-inch aluminum diamond plate, minimum, stiffened and designed for H-20 live loads at areas that could receive traffic wheel loads.

11. Door frames shall be trough-type or angle-type as indicated on the Drawings and equipped with a built-in neoprene cushion. On trough-type frames, the drainpipe shall be provided by the Contractor and shall extend to the nearest point of discharge acceptable to the Engineer.

12. Exterior doors shall be Type "J-AL" or "JD-AL", by Bilco Company, Type ”W1S” or “W2S” by Halliday Products Inc., Type "TPS" or "TPD", by U.S.F. Fabrication Inc., Type "THG" or "THG-D", by Thompson Fabricating LLC., or equal.

13. Interior doors shall be Type "K" or "KD", by Bilco Company, Type ”S1S” or “S2S” by Halliday Products Inc., Type "APS300" or "APD300", by U.S.F. Fabrication Inc., Type "TH" or "TH-D", by Thompson Fabricating LLC., or equal.

14. Doors rated for H-20 traffic loading shall be “JAL-HD” or “JDAL-HD” by the Bilco Company, Type “H1W” or “H2W” by Halliday Products, Inc.

15. Hatches shall be guaranteed against defects for a period of five years.

B. Roof Access Hatches

1. Roof access hatches shall be designed for a 50 psf live load minimum, unless noted otherwise.

2. Roof access hatches for service stairs shall be Bilco Type L Roof Scuttles.

3. Roof access hatches for ladder access shall be Bilco Type S or SS Roof Scuttles.

4. Roof access hatches shall be provided with curb and integral cap flashing.

C. Equipment Access Hatches

1. Equipment access hatches shall be Bilco Type D or equal. Equipment access hatches shall be provided with curb and integral cap flashing.

2.06 FIXED LADDERS

A. Where the Contract Documents indicate fixed ladders are required under access hatches, they shall be provided with “LadderUp, Model LU-4” by Bilco Company, “L1E Ladder Extension” by Halliday Products Inc., or “Ladder Climb-out Device” by Thompson Fabricating.

B. The safety posts shall be manufactured of the same material as the access door with telescoping tubular sections that lock automatically when fully extended.

C. Upward and downward movement shall be controlled by a stainless steel balancing mechanism.

D. Safety posts shall be assembled in strict accordance with manufacturer's recommendations.

2.07 FALL THROUGH PREVENTION SYSTEM

A. All access hatches and access doors covering openings measuring 12 inches or more in its least dimension through which persons may fall shall be equipped with a fall through prevention system, except where noted on the Contract Drawings. Access hatches and access doors shall be provided with a permanent installed fall through prevention grate system that provides continuous safety assurance in both its closed and open positions. The grate system shall be made with 6061-T6 aluminum or FRP and be designed for a 300 psf minimum live load, unless noted otherwise.

PART 3 – EXECUTION

3.01 FABRICATION

A. All measurements and dimensions shall be based on field conditions and shall be verified by the Contractor prior to fabrication. Such verification shall include coordination with adjoining work. Fabrication shall begin only after such field measurements.

B. All fabricated work shall be shop fitted together as much as practicable and delivered to the field, complete and ready for erection, unless sections have to be removable. All miscellaneous items such as stiffeners, fillets, connections, brackets, and other details necessary for a complete installation shall be provided.

C. All work shall be fabricated and installed in a manner that will provide for expansion and contraction, prevent shearing of bolts, screws, and other fastenings, ensure rigidity, and provide a close fit of sections.

D. Finished members shall conform to the lines, angles, and curves shown on the Drawings and be free from distortions of any kind.

E. All shearings shall be neat and accurate, with parts exposed to view neatly finished. Flame cutting is allowed only when performed utilizing a machine.

F. All shop connections shall be welded unless otherwise indicated on the Drawings or specified herein. Bolts and welds shall conform to the Section entitled “Metal Fastening.” All fastenings shall be concealed where practicable.

3.02 INSTALLATION

A. Assembly and installation of fabricate system components shall be performed in strict accordance with manufacturer’s recommendations.

B. All gratings, access hatches, and access doors shall be erected square, plumb and true, accurately fitted, adequately anchored in place and set at proper elevations and positions.

- END OF SECTION -

SECTION 05540

CASTINGS

PART 1 – GENERAL

1.01 THE REQUIREMENT

A. The Contractor shall furnish all materials, labor, and equipment required to provide all castings in accordance with the requirements of the Contract Documents.

1.02 RELATED WORK SPECIFIED ELSEWHERE

A. Section 03480 - Precast Concrete Manholes, Handholes and Vaults

B. Section 05010 - Metal Materials

1.03 REFERENCE SPECIFICATIONS, CODES AND STANDARDS

A. Without limiting the generality of the other requirements of the specifications, all work herein shall conform to the applicable requirements of the following documents. All referenced specifications, codes, and standards refer to the most current issue available at the time of Bid.

1. Florida Building Code (FBC)

1.04 SUBMITTALS

A. Submit the following in accordance with Section 01300 entitled "Submittals".

1. Complete fabrication and erection drawings of all castings specified herein.

2. Other submittals as required in accordance with Section 05010 entitled "Metal Materials", and Section 05050 entitled "Metal Fastening".

PART 2 – PRODUCTS

2.01 METAL MATERIALS

A. Metal materials used for castings shall conform to Section 05010 entitled "Metal Materials", unless noted otherwise.

2.02 METAL FASTENING

A. All welds and fasteners used for castings shall conform to Section 05050 entitled "Metal Fastening", unless noted otherwise.

2.03 IRON CASTINGS

A. General - Iron Castings shall include, but not be limited to frames, covers, and grates for trench drains, catch basins, and inlets; and stop log grooves.

1. Castings shall be of gray iron of uniform quality, free from defects, smooth and well cleaned by shotblasting.

2. Catalog numbers on the Drawings are provided only to show required types and configuration. All covers shall be cast with raised letters as designated on the Drawings.

3. Castings shall be as manufactured by Neenah Foundry Company, US Foundry, or equal.

B. Covers and Grates

1. Covers and grates shall be provided with matching frames. Cover shall fit flush with the surrounding finished surface. The cover shall not rock or rattle when loading is applied.

2. Round covers and frames shall have machined bearing surfaces.

3. Design loadings:

a. Where located within a structure, a minimum design loading of 300 psf shall be used, unless noted otherwise.

b. At all locations not within a structure, the design loading shall be a standard AASHTO H-20 truck loading, unless otherwise noted.

C. Watertight gasketing, bolting, locking devices, patterns, lettering, pickholes, vents, or self-sealing features shall be as detailed on the Drawings.

PART 3 – EXECUTION

3.01 FABRICATION

A. All measurements and dimensions shall be based on field conditions and shall be verified by the Contractor prior to fabrication. Such verification shall include coordination with adjoining work.

B. All fabricated work shall be shop fitted together as much as practicable, and delivered to the field, complete and ready for erection. All miscellaneous items such as stiffeners, fillets, connections, brackets, and other details necessary for a complete installation shall be provided.

C. Finished members shall conform to the lines, angles, and curves shown on the Drawings and shall be free from distortions of any kind.

3.02 INSTALLATION

A. Assembly and installation of fabricated system components shall be performed in strict accordance with manufacturer's recommendations.

B. All castings shall be erected square, plumb and true, accurately fitted, adequately anchored in place, and set at proper elevations and positions.

- END OF SECTION -

SECTION 05830

BEARING DEVICES AND ANCHORING

PART 1 – GENERAL

1.01 THE REQUIREMENTS

A. The Contractor shall furnish and install bearing plates, pads, expansion devices, anchor rods and bolts and/or other devices used in conjunction with bearings and anchoring of bearing devices and assemblies at supports in accordance with this item and in conformity with the Drawings.

1.02 RELATED WORK SPECIFIED ELSEWHERE

A. Section 05010 - Metal Materials

B. Section 05035 - Galvanizing

C. Section 05050 - Metal Fastening

D. Section 05120 - Structural Steel

E. Section 05140 - Structural Aluminum

F. Section 09900 - Painting

1.03 REFERENCE SPECIFICATIONS, CODES, AND STANDARDS

A. Without limiting the generality of other requirements of these Specifications, all work specified hereunder shall conform to the applicable requirements of the following documents to the extent that the provisions of such documents are not in conflict with the requirements of this Section.

1.	RMA Rubber Handbook	A4-F3-T.063-B2, Grade 2, Method B
2.	ASTM A240,Standard	Specification for Heat Resisting Chromium and Chromium - Nickel Stainless Steel Plate and Sheet
3.	ASTM A480Standard	Specification for General Requirements for Flat-Rolled Stainless and Heat-Resisting Steel Plate, Sheet and Strip
4.	ASTM D395	Standard Test for Rubber Property – Compression Set Method B
5.	ASTM D412	Standard Test for Rubber Properties In Tension
6.	ASTM D471	Standard Test for Rubber Property - Effect of Liquids
7.	ASTM D573	Standard Test for Rubber-Deterioration In Air Oven

8.	ASTM D575	Standard Test for Rubber Properties In Compression Method A
9.	ASTM D624	Die CStandard Test for Rubber Property - Tear Resistance
10.	ASTM D746	Standard Test for Brittleness Temperature of Plastics and Elastomers by Impact
11.	ASTM D792	Standard Test for Specific Gravity and Density of Plastics by Displacement
12.	ASTM D1149	Standard Test for Rubber Deterioration - Surface Ozone Cracking In a Chamber (Flat Specimens)
13.	ASTM D1785	Standard Specification for Poly (Vinyl Chloride) (PVC) Plastic Pipe, Schedule 40
14.	ASTM D2240	Standard Test for Rubber Property - Durometer Hardness
15.	ASTM D2256	Standard Test for Breaking Load (Strength) and Elongation of Yarn by the Single-Strand Method
16.	ASTM D4894	Standard Specification for PTFE Granular Molding and RPM Extension Materials
17.	ASTM D4895	Standard Specification for PTFE Resin Produced From Dispersion

1.04 SUBMITTALS

A. Submit the following in accordance with the requirements of Section 01300, Submittals:

1. Certification of compliance that the materials furnished under this section meet and conform to the property and physical requirements, including all testing, as stated herein and as referenced. Specifically, the certification shall state compliance with the applicable standards (ASTM, ANSI, etc.) for fabrication and testing.

2. Shop Drawings for all materials, including installation and adjustment instructions. Included with the Shop Drawings shall be all material certifications, mill test results, working drawings, etc., which are required by this and other applicable sections of the Specifications.

PART 2 – PRODUCTS

2.01 ELASTOMERIC BEARING PADS

A. The elastomer portion of pads shall be new neoprene compound. Pads shall be cast under heat and pressure and may be individually molded or cut from pressure-cast stock. Variations from the dimensions shown on the Drawings shall not be more than the

following: thickness, ±1/16 inch; width, -1/8 to +1/4 inch; length, -1/8 to +1/4 inch. Tolerances, dimensions, finish and appearance, flash, and rubber-to-metal bonding shall conform to the requirements of A 4-F3-T.063-B2, Grade 2, Method B, in accordance with the RMA Rubber Handbook. Pads shall be furnished in one piece and shall not be laminated unless otherwise specified. Pads shall be furnished in identifiable packages.

B. Adhesive for use with elastomer pads shall be an epoxy-resin compound compatible with the elastomer having a sufficient shear strength to prevent slippage between pads and adjacent bearing surfaces. Adhesive shall be 20+F Contact Cement by Miracle Adhesives Corporation, Neoprene Adhesive 77-198 by IGI Adhesives, Sikadur 31, Hi-Mod Gel by Sika Corporation, or DP-605 NS Urethane Adhesive by 3M Adhesive Systems.

C. Laminated pads shall consist of alternate laminations of elastomer and hot-rolled steel sheets molded together as a unit. Outer metal laminations shall be 3/16 inch, and inner laminations shall be 14 gage. Outer laminations of elastomer shall be 1/4 inch, and inner laminations shall be of equal thickness (at least 3/8 but not more than 1/2 inch), depending on the number of laminations and thickness of the pad. Edges of metal laminations shall have a cover of approximately 1/8 inch of elastomer. The top and bottom bearing surfaces shall each have an integral sealing rib approximately 1/8 inch in depth, in addition to the specified total thickness, and 3/16 inch in width around their peripheries. The bond between the elastomer and metal shall be such that failure shall occur in the elastomer and not between the elastomer and steel when tested for separation. Variations from specified dimensions for individual laminations shall not be more than those specified herein. The total thickness of the complete pad shall not vary more than ±1/8 inch.

D. Material having a nominal durometer hardness of 70 and 50 shall be used for nonlaminated pads and laminated pads, respectively. Test samples will be prepared from finished pads. Samples of each thickness will be taken from 2 full-size pads from each shipment of 300 pads or less, with 1 additional pad for each additional increment of 300 pads or fraction thereof. When tested using the ASTM methods designated, samples shall comply with the following physical requirements.

1. Original Physical Properties: Test results for tear resistance, tensile strength, and ultimate elongation shall not be more than 10 percent below the following specified value:

	Nominal Hardness 50	Nominal Hardness 70
Min. tear resistance, ASTM D624, Die C (lb/in of thickness)	180	200
Hardness, ASTM D2240 (points)	50±5	70±5
Min. tensile strength, ASTM D412 (average psi of longitudinal and transverse)	2,500	2,500
Min. ultimate elongation (%)	400	300

The compressive deflection tested in accordance with ASTM D575, Method A, shall be as follows:

a. Laminated Pads: The maximum compression deflection shall be 5 and 7 percent of the total rubber thickness at loads of 500 and 800 pounds per square inch, respectively. The maximum shear resistance shall be 50 pounds per square inch

of the plan area at 25 percent shear deformation at –20°F. Test pads shall be subjected to a compressive load of 1.5 times the maximum design load without visible damage to the bearing.

b. Nonlaminated Pads: When loaded within 300 to 800 pounds per square inch, material shall show a compressive deflection within 20 percent of that given in the charts of Method A, interpolating for actual measured hardness.

2. Changes in Original Physical Properties: When pads are oven aged 70 hours at 212°F in accordance with ASTM D573, changes shall not be more than the following:

Property	Value
Hardness (points change)	0 to +15
Tensile strength (% change)	±15
Ultimate elongation (% change)	-40

3. Extreme Temperature Characteristics: Compression set under constant deflection, ASTM D395, Method B, 22 hours at 212°F, shall not be more than 35 percent. With the low-temperature brittleness test, ASTM D746, breaks shall not occur above –20°F.

4. Ozone Cracking Resistance: Upon exposure to 100 parts per million of ozone in air by volume at a strain of 20 percent and a temperature of 100±2°F in a test otherwise in accordance with ASTM D1149, cracks shall not develop within 100 hours. Samples shall be wiped with solvent before the test to remove traces of surface impurities.

5. Oil Swell: The volume change shall not be more than +120 percent when tested in accordance with ASTM D471 with ASTM Oil No. 3, 70 hours at 212°F.

2.02 TFE BEARING SURFACES

A. TFE resin shall be virgin material conforming to the requirements of ASTM D4894 or D4895. The specific gravity shall be 2.13 to 2.19. The melting point shall be 623±2°F.

B. Filler material shall be milled glass fibers, carbon, or other approved inert filler materials.

C. Adhesive material shall be an epoxy resin conforming to FS MMM-A-134, FEB film or equal, as approved by the Engineer.

D. When tested in accordance with ASTM D4894 or D4895, finished unfilled TFE sheets shall have a tensile strength of at least 2,800 pounds per square inch and an elongation of at least 200 percent.

E. Filled TFE sheets shall contain inert filler material uniformly blended with TFE resin. Finished filled TFE sheets containing glass fiber or carbon shall conform to the following:

	ASTM Method	15% Glass Fibers	25% Carbon
Min. tensile strength	D4894/D4895	2,000 psi	1,300 psi
Min. elongation	D4894/D4895	150%	75%
Min. specific gravity	D792	2.20	2.10

	ASTM Method	15% Glass Fibers	25% Carbon
Melting point	D4894/D4895	327±10°C	317 ±10°C

F. Fabric containing TFE fibers shall be manufactured from oriented multifilament TFE fluorocarbon fibers and other fibers as required by specific designs. When tested in accordance with ASTM D2256, the tensile strength of TFE fibers shall be at least 24,000 pounds per square inch and the elongation shall be at least 75 percent.

G. Where TFE sheets are to be epoxy bonded, one surface of the sheet shall be factory treated by an approved manufacturer using the sodium naphthalene or sodium ammonia process.

H. Stainless steel mating surfaces shall be at least 16 gage in thickness and shall conform to the requirements of ASTM A240, Type 304. The mating surface shall be a true plane surface with a Brinnell hardness of at least 125 and a surface finish of an at least No. 8 mirror finish in accordance with ASTM A480. Stainless steel mating surfaces shall be polished or rolled as necessary to conform to the friction requirements specified herein. The stainless steel shall be attached to the sole plate by means of a seal weld around the entire perimeter of the facing material.

I. The coefficient of friction for the completed bearing assembly shall not be more than the following:

	Bearing Pressure		
Material	500 psi (3.447 MPa)	2,000 psi (13.790 Mpa)	3,500 psi (24.132 MPa)
Unfilled TFE, fabric Containing TFE fibers, TFE perforated metal composite	.08	.06	.04
Filled TFE	.12	.10	.08
Interlocked bronze and filled TFE structures	.10	.07	.05

2.03 ANCHOR RODS

A. Anchor bolts shall be as specified in Section 05050, Metal Fastening.

2.04 PIPE SLEEVES AND COLLARS

A. Pipe sleeves and collars shall be cut from schedule 40 PVC plastic pipe meeting the requirements of ASTM D1785 unless otherwise noted on the Drawings.

PART 3 – EXECUTION

3.01 STEEL PLATES, SHAPES, AND BARS

A. Unless galvanizing is indicated on the Drawings, items shall be painted in accordance with the Drawings and Section 09900, Painting.

B. If galvanizing is indicated on the Drawings, steel bearing assemblies for both structural steel beams and girders and prestressed concrete members shall be galvanized as specified in Section 05035, Galvanizing. Except for attachments of bearing plates to beams, all fabrication and welding of bearing plate assemblies shall be performed before the steel is galvanized. All joints of welded parts shall be sealed with weld material. Welds made for attaching bearing plates to beams or girders shall be cleaned and given 2 coats of zinc rich paint having a minimum total coating thickness of 3 mils.

3.02 BRONZE PLATES

A. Sliding surfaces of bronze plates shall be polished.

3.03 COPPER-ALLOY PLATES

A. Finishing of rolled copper-alloy plates will not be required provided their surfaces are plane, true, and smooth.

3.04 SELF-LUBRICATING PLATES

A. Plates shall be fabricated from cast bronze or rolled copper alloy.

B. Sliding surfaces of plates shall be provided with annular grooves or cylindrical recesses or a combination thereof, which shall be filled with a lubricating compound. The lubricating compound shall be compressed into recesses under sufficient pressure to form a nonplastic lubricating inset. The inset shall comprise at least 25 percent of the total area of the plate. The frictional coefficient shall not be more than 0.10. The compound shall be free from material that will cause abrasive or corrosive action on metal surfaces and able to withstand extremely high pressures and atmospheric elements over long periods of time.

C. Items shall be the standard products of the manufacturer of such materials for the application.

D. Prior to assembly, the steel surface that will bear on the self-lubricating bearing plate shall be thoroughly lubricated with additional antioxidant lubricant furnished by the manufacturer. Coatings shall be removed before application of antioxidant lubricant.

3.05 ELASTOMERIC PADS

A. Care shall be taken in fabricating pads and related metal parts so that effects detrimental to their proper performance, such as uneven bearing and excessive bulging, will not occur.

3.06 PLACEMENT OF BEARING PLATES AND PADS

A. Bearing areas shall be finished to a true level plane which shall not vary perceptibly from a straightedge placed in any direction across the area.

B. Bearing plates or pads shall be set level in exact position and shall have a uniform bearing over the entire area. Provision shall be made to keep plates or pads in the correct position during erection of beams or placement of concrete.

C. Elastomeric pads and other flexible bearing materials shall be placed directly on masonry surfaces finished to a roughness equivalent to that of a No. 36 to No. 46 grit. Pads, bearing areas, or bridge seats and metal bearing plates shall be thoroughly cleaned and free from oil, grease, and other foreign materials. Metal bearing plates or bottoms of prefabricated beams that are to bear on elastomeric pads shall be coated with epoxy and then surfaced with a No. 36 to No. 46 silicon carbide or aluminum oxide grit. Bearing areas shall be finished to equivalent roughness.

D. Metal bearing plates shall be bedded on bridge seats as follows:

1. The bridge seat bearing areas shall be thoroughly swabbed with approved paint, and three layers of duck, 12 to 15 ounce per square yard, shall be placed on it, each layer being thoroughly swabbed with paint on its top surface.

2. Superstructure shoes or pedestals shall be placed in position while paint is plastic. As an alternate to duct and paint, preformed fabric bedding material at least 1/8 inch in thickness may be used when called for on the Drawings or approved in writing by the Engineer.

3.07 PLACEMENT OF ANCHOR RODS

A. All necessary anchor rods and bolts (anchors) shall be accurately set either in the concrete as they are being placed, in formed holes, or in holes cored after the concrete has set. If set in the concrete, the rods and bolts shall be accurately positioned by means of templates and rigidly held in position while the concrete is being placed. Holes may be formed by inserting or casting in the fresh concrete oiled wooden plugs, metal pipe or plastic sleeves, or other approved devices, and withdrawing them after the concrete has partially set or left in place as indicated on the Drawing's or approved by the Engineer. Holes so formed shall be at least 3 inches in diameter or at least 2.5 times the diameter of the rod or bolt. If cored, holes shall be at least 2.5 times the diameter of the anchor used or as indicated on the Drawings. Equipment used for coring concrete shall have been approved by the Engineer. Impact tools will not be permitted. Reinforcing steel shall be placed to provide adequate space to core rod/bolt holes without cutting the reinforcing steel. For cored holes, anchor rods and bolts shall be adequately held in place at the centroid of the hole or as specified on the Drawings by using approved pre-fabricated equalizers designed to allow grout to penetrate and fill the hole completely and spaced as approved by the Engineer.

B. During freezing conditions, anchor rod holes shall be protected from water accumulations at all times.

C. Anchors which are to be placed in holes of sufficient and specified diameter after the concrete has set shall be bonded to the concrete with a non-shrink high-strength Portland cement grout in accordance with Section 03315 – Grout or shall be adhesive anchors in accordance with Section 05050 - Metal Fastening. The type anchoring system and grout shall be as indicated on the Drawings. The grout or adhesive shall completely fill the holes. Anchors shall be tested for sufficient pull-out capacity as indicated in applicable sections of the Specifications or as indicated on the Drawings.

D. Anchors that are not designed to project through bearing plates shall be checked for proper projection above the masonry bearing area immediately prior to placement of

bearing plates and beams. Nuts on anchor rods at expansion ends shall be adjusted to permit free movement of the span.

E. Angles for anchor assemblies to be attached to sides of concrete beams shall not be installed until beams have received their full dead load and supporting falsework has been removed.

- END OF SECTION -

DIVISION 6 – WOODS AND PLASTICS

SECTION 06100

ROUGH CARPENTRY

PART 1 – GENERAL

1.01 THE REQUIREMENT

A. Furnish labor, materials, equipment and appliances required for complete execution of Work shown on the Drawings and specified herein.

B. Principal items of work include:

1. Wood blocking, nailers, grounds, furring, ties, centering, etc., necessary or required for attachment or support of work under this Section, and other Sections.

2. Fasteners, including nails, screws, bolts, anchors and other fastenings, required to secure work under this Section.

3. Temporary enclosures and protective boarding.

4. Wood preservative treatment for all wood members in contact with roofing, masonry, concrete, and exposed to the elements.

1.02 REFERENCE SPECIFICATIONS, CODES AND STANDARDS

A. Without limiting the generality of these specifications Work shall conform to the applicable requirements of the following documents:

1.	AWPA CA	Preservative Standards, Lumber and Plywood.
2.	AWPA C20	Structural Lumber Fire-Retardant Treatment by Pressure Process.
3.	AWPC C27	Plywood Fire-Retardant Treatment by Pressure Process.
4.	AWPA M4	Standards for Care of Preservative Treated Wood Products.
5.	APAG	Guide to Plywood Grades.
6.	FM 1-49	Perimeter Flashing

1.03 SUBMITTALS

A. In accordance with the procedures and requirements set forth in Section 01300 - Submittals, submit the following:

1. Certifications of Preservative and Fire-Retardant Treatment.

2. Warranty of treatment manufacturer.

3. Certification of type and grade of lumber to be used.

4. Certification of type, rating and conformance to APA Standards.

1.04 DELIVERY AND STORAGE

A. Take all measures necessary to protect products against damage during delivery and storage.

B. Store lumber in enclosed places in such a manner to provide ventilation and protection from the weather.

PART 2 – PRODUCTS

2.01 MATERIALS

A. Blocking, nailers, grounds and the like: Eastern Spruce or Douglas Fir No. 3 Dimension Lumber or Construction Grade, with a moisture content not to exceed 19%.

B. Plates, blocking, and nailers in contact with concrete or masonry: Pressure treated southern yellow pine.

C. Plywood: Identified with APA Grade trademarks of the American Plywood Association, in thickness as shown on the Drawings.

1. Exterior: AC EXT APA where exposed to view or a finish is required, CD-EXT-APA where concealed.

2. Interior: AC INT APA where exposed to view or a finish is required, CD-INT-APA where concealed.

D. Structural Framing Lumber: Douglas Fir No.1 grade with fb = 1,500 pounds per square inch and E = 1,700,000 pounds per square inch, 19 percent moisture content.

E. Fasteners: Provide clamps, connectors, straps, nails, bolts, screws, anchors, ties and other accessories and fasteners shown or required to properly secure all rough carpentry. Fasteners and accessories shall be stainless steel, galvanized, or other noncorrosive metal recommended for use. Fasteners used with pressure treated wood shall be compatible with the wood preservative treatment to prevent corrosion of fasteners.

F. Wood Preservative Treatment: Waterborne pressure treatment in conformance with the American Wood Preservers' Association standard P5. Retention shall be in accordance with AWPA Standards and be a minimum of 0.40 pounds per cubic foot for contact with or below ground, concrete, or masonry and 0.25 pounds per cubic foot for above ground. Stamp each piece of treated wood with a trademark identifying the classification of the treatment or a certificate from the processor for each shipment.

G. Fire Retardant Treatment: Fire-retardant lumber and plywood must have an Underwriters Laboratories stamp signifying a FR-S rating and certifying a 25 or less flame spread and smoke developed value, when tested in accordance to UL 723, ASTM E 84, and NFPA 255 "Tunnel Test", and when the test is extended for 20 additional minutes. Treatment formulation shall contain no halogens, sulfates, chlorides or ammonium phosphate. Smoke toxicity shall be no more than that of untreated wood.

H. Connecting Hardware

1. Nails shall be stainless steel common wire for exterior work.

2. Screws shall be standard domestic manufacture, stainless steel for exterior use and of brass, bronze, aluminum or stainless steel when used to attach items made of those materials.

3. Bolts shall be machine bolts (or carriage bolts if called for on Drawings) of Series 300 stainless steel with hexagon nuts, of sizes noted on Drawings. Wood fascia fasteners shall be galvanized steel and conform to the requirements of ASTM Designation A 307.

4. Steel plates and angles shall be carbon steel, ASTM A 36, galvanized after fabrication for temporary items and stainless steel for permanent items as shown on the Drawings.

5. Lag screws, shear plates and split ring connectors shall conform to the requirements of the "National Design Specifications for Wood Construction from the National Forest Products Association and shall be stainless steel.

6. Power actuated fasteners shall conform to Federal Specification GGG-D-777a, and shall be installed as per manufacturer's printed directions. Power charge shall be powerful enough to prevent spalling of concrete.

PART 3 – EXECUTION

3.01 COORDINATION

A. Coordinate with all trades as to nailers, blocking, grounds and the like required for the attachment of their work and other items requiring same. Carry out all work as required to cooperate work of other trades.

3.02 INSTALLATION

A. Perform work in conformance manufacturer's recommendations and specifications, industry, national and local standards and codes.

B. Layout, cut, fit and erect rough blocking, nailers, furring and other rough carpentry. Do cutting work in connection with carpentry and finish for other trades. Brace plumb and level all members in true alignment and rigidly secure in place with sufficient nails, spikes, screws and bolts. Defects which render any piece or part unable to serve its intended purpose shall be discarded or, cut out and replaced.

C. Provide all bracing, supports and shoring required to support construction.

D. Protect all masonry including edges of concrete platforms and similar items. Remove protective covering when directed. Take special precautions at masonry openings and corners of the building.

E. Set all rough hardware, such as plates, spikes, bolts, nails, lag screws, lagging bolts, anchors, etc., as required to hold woodwork together or to anchor or secure it to other materials and construction.

F. Provide wood grounds, nailing strips and similar items wherever necessary or required throughout the project for the support, proper erection or installation of the work and support of mirrors, cabinets, shelf cleats, base and similar items. Thoroughly secure in place by approved means.

G. Secure wood grounds, nailing strips and similar items to metal plugs set in masonry, toggle or expansion bolts. Give the mason all necessary information to enable him to lay out correctly the location for metal wall plugs. Wood plugs will not be accepted.

H. Construct joints to support dead loads, live loads, snow loads, wind loads, or combinations in conformance with "National Design Specifications for Stress Grade Lumber and its Fastenings", recommended by National Forest Products Association.

I. Nailers and Blocking: Provide and secure wood nailers, blocking, for the reception of roof curbs, roofing, etc. in accordance with FM I-49, or as required by the Building Code, whichever is most stringent. Coordinate attachment with roofing system, where roofing system design includes design of nailers provide attachment in accordance with engineered roofing design.

1. Provide nailers of sizes, shapes and profiles indicated on the Drawings. Nailers shall not be less than 2 x6. Build up nailers as required to achieve thickness of insulation or as required to provide proper attachment of roofing and curbs. Provide anchors as required for secure attachment of roofing systems, copings, gravel stops or other edge terminations.

3.03 TEMPORARY PROTECTION

A. Provide and install all temporary protection in accordance with applicable provisions of the Contract Documents, OSHA regulations, and as follows:

1. Temporary protection shall include wood doors, railings, protection of floor or roof openings, temporary partitions, and the like; adequately maintained in good repair during the life of the Contract.

2. Furnish and set temporary partitions with wood doors at all exterior doorways, exterior openings or in locations exposed to weather. Substantially build and hang, with proper hinges, locks and other necessary hardware, and remove and reset whenever required to accommodate the Work and keep in good repair.

3. Provide substantial temporary wood covering or guards for openings left in floor or roof slabs for ducts, shafts, etc., using rough planking at least 2 inch thick, cleated

together and otherwise made sufficiently strong and put in place wherever required immediately after the forms have been removed.

3.04 JOB CONDITIONS

A. If the installation of metal frames and glass does not promptly follow the completion of the exterior enclosures, and if the absence of enclosures would cause damage, close in all such openings temporarily by the use of heavy polyethylene plastic sheeting, or canvas stretched over and nailed to frames of 1 inch x 2 inch or heavier strips.

3.05 REMOVAL OF TEMPORARY WORK

A. Remove all temporary protection when so directed, or prior to acceptance of this project.

- END OF SECTION -

DIVISION 7 – THERMAL AND MOISTURE PROTECTION

SECTION 07160

BITUMINOUS DAMPPROOFING

PART 1 – GENERAL

1.01 THE REQUIREMENT

A. Prepare and prime surfaces to receive dampproofing.

B. Apply bituminous dampproofing on exterior concrete wall surfaces below grade of new tanks, precast vaults and manhholes, and structures that enclose interior areas installed under this Contract, unless otherwise indicated to be coated in Specification 09900 – Painting.

C. Seal/caulk joints and protrusions through dampproofing.

D. Place protective cover over applied dampproofing.

1.02 RELATED WORK SPECIFIED ELSEWHERE

A. Section 03300 - Cast-in-Place Concrete

B. Section 03400 - Precast Concrete

C. Section 03315 – Grout

D. Section 09900 – Painting

1.03 REFERENCE STANDARDS

A. ASTM D41 Primer for Use with Asphalt in Dampproofing and Waterproofing.

B. ASTM D449 Asphalt for Dampproofing and Waterproofing.

C. ASTM D1668 Glass Fiber Fabric Impregnated with Bitumen.

1.04 SUBMITTALS

A. Submit product data in accordance with Section 01300 - Submittals.

B. Submit manufacturer's product literature, specification data sheets and instructions for application recommendations.

1.05 DELIVERY, STORAGE AND HANDLING

A. Deliver materials in manufacturer's unopened containers identified with name, brand, type, grade, class and all other qualifying information.

B. Store materials in dry location to prevent damage or intrusion of foreign matter. Remove damaged materials from the job site.

PART 2 – PRODUCTS

2.01 ACCEPTABLE MANUFACTURERS

A. Subject with compliance with the Specifications provide products from one of the following:

1. Karnak Corp.
2. W.R. Meadows
3. Koch Materials Co.
4. BASF Master Builders Solutions

2.02 MATERIALS

A. Asphalt Primer: Type recommended by manufacturer.

B. Dampproofing: Non-asbestos, fibrated mastic conforming to ASTM D-1227, Type II, Class 1, compatible with cavity wall insulation.

PART 3 – EXECUTION

3.01 DELIVERY, STORAGE AND HANDLING

A. Deliver materials in manufacturer's unopened containers identified with name, brand, type, grade, class and all other qualifying information.

B. Store materials in dry location to prevent damage or intrusion of foreign matter. Remove damaged materials from the job site.

3.02 SURFACE PREPARATION

A. Ensure surfaces are firm, dry and free from loose particles, cracks, pits, rough projections, grease, oil and other foreign matter detrimental to adhesion and monolithic application of dampproofing.

B. Remove loose particles and foreign matter with scraper, wire brush or other effective means. Remove grease or oil with safety solvent, effective alkaline cleaner or detergent. If safety solvents are used, follow with an application of alkaline cleaner or detergent scrub surfaces clean with water.

3.03 APPLICATION

A. Prime surfaces with manufacturers recommended primer. Apply dampproofing at the rate of 6 gallons per 100 square feet.

B. Apply dampproofing to substrates to provide a complete moisture resistant coating.

C. Each coat shall be color coded with red as the base coat and black as the top coat.

3.04 PROTECTION

A. Protect building from damage resulting from spillage, dripping and dropping of materials. Repair work damages during dampproofing operations.

B. Take precautions against fire and other hazards during delivery, storage and installation of flammable materials. Comply with local ordinances and fire regulations in the installation of hazardous materials.

3.05 CLEANING

A. Clean adjacent materials and finishes which have been soiled.

- END OF SECTION -

SECTION 07190

VAPOR BARRIER

PART 1 – GENERAL

1.01 THE REQUIREMENT

A. The Contractor shall furnish and install a vapor barrier to be placed under all reinforced concrete placed against soil as specified herein or shown on the Drawings.

1.02 RELATED WORK SPECIFIED ELSEWHERE

A. Section 03300 - Cast-in-Place Concrete

PART 2 – PRODUCTS

2.01 VAPOR BARRIER

A. Vapor Barrier: A reinforced laminate membrane with a minimum tensile strength of 75 lbs/in. in accordance with ASTM D-882, vapor transmission rating of 0.02 perms in accordance with E-96, and a puncture resistance of 25 lbs in accordance with ASTM D 4833.

B. Adhesive/Tape: Type approved by the Manufacturer of the vapor material.

C. Penetration sealing: Provide manufacturer's recommended penetration seals at all pipe, conduit, and similar penetrations.

2.02 ACCEPTABLE MANUFACTURERS

A. Subject to compliance with the Specifications, provide products from one of the following manufacturers:

1. Viper Vapercheck 10 by Insulation Solutions, Inc.
2. Griffolyn Type-85, by Reef Industries, Inc.
3. Or Equal

PART 3 – EXECUTION

3.01 VAPOR BARRIER

A. Vapor barrier shall be placed on top of 4 inches minimum of compacted structural fill stone, free of debris and protrusions, as shown on the Drawings for structural slabs.

B. Lap edges 12 inches and seal with adhesive tape. Lay with seams perpendicular to and lapped in the direction of placement. Do not penetrate vapor barrier.

C. Protect from damage until concrete is placed. Punctures and tears in vapor barrier shall be repaired using patches of the material which overlaps puncture or tear a minimum of 12 inches; seal with tape or adhesive.

D. Penetrations through vapor barrier, such as pipe, drains, conduits and similar penetrations, shall be sealed in strict accordance with manufacturer's recommended instructions.

- END OF SECTION -

SECTION 07240

EXTERIOR INSULATION FINISH SYSTEM (EIFS)

PART 1 -- GENERAL

1.01 THE REQUIREMENT

A. Furnish labor, materials, equipment and appliances required for the complete execution of Work as shown on Drawings and specified herein.

1.02 REFERENCE SPECIFICATIONS, CODES AND STANDARDS

A. Without limiting the generality of these specifications, the Work shall conform to the applicable requirements of the following documents:

1 ASTM C578 Rigid, Cellular Polystyrene Thermal Insulation

2. ASTM E84 Surface Burning Characteristics of Building Materials

3. EIMA 101 Resistance of Exterior Insulation and Finish Systems, Class PB, to the Effects of Rapid Deformation (Impact)

4. Florida Building Code Product Approval

1.03 SUBMITTALS

A. In accordance with the procedures and requirements set forth in the Section entitled “Submittals”, submit the following:

1. Manufacturer's data on each product to be used.

2. Manufacturer's printed recommendations and installation instructions.

3. Layout drawings.

4. Color samples. (12-inch x 12-inch)

5. Copy of Florida Building Code Approval for system being provided.

6. Copy of manufacturer’s five-year warranty.

1.04 QUALITY ASSURANCE

A. Use only EIFS installers trained and approved by the EIFS manufacturer and having successfully installed at least five years experience.

B. Use EIFS system with Florida Building Code Approval approved for use in HVHZ

1.05 WARRANTY

A. Provide manufacturer's five-year warranty against loss of bond, peeling, flaking, chipping, fading, and water resistance.

1.06 ENVIRONMENTAL CONDITIONS

A. Do not apply EIFS during inclement weather unless appropriate protection is provided.

B. Apply materials only at ambient temperatures of 40 degrees Fahrenheit or above and rising.

1.07 DELIVERY, STORAGE AND HANDLING

A. Delivery materials to job site in original unopened packages, with manufacturer label indicating name, and description of contents.

B. Store materials off the ground in a clean, dry, well ventilated space and in accordance with manufacturer's recommendations.

C. Do not expose insulation and flammable components to flame or ignition sources.

PART 2 -- PRODUCTS

2.01 ACCEPTABLE MANUFACTURERS

A. Subject to compliance with the Specifications provide products manufactured by one of the following:

1. Senergy Inc.

2. Dryvit Systems Inc.

3. Sto Finish Systems

4. Simplex Products Division

2.02 SYSTEM DESCRIPTION

A. Provide manufacturer's mechanically fastened high impact Exterior Finish System with a sand textured finish and approved for use in HVHZ and resist small and large missile impact. Up to three colors will be selected.

2.03 INSULATION

A. Provide thermal insulation recommended by the EIFS manufacturer for the type of application and in conformance with ASTM C578.

2.04 ADHESIVE

A. Provide type recommended by manufacturer for type application.

2.05 MECHANICAL FASTENERS

A. Provide corrosion resistant type recommended by manufacturer for type of application, and space as recommended by manufacturer.

2.06 BASE COAT

A. Manufacturer's standard acrylic resin based product with Type 1 Portland cement.

2.07 REINFORCING FABRIC

A. Manufacturer's heavy duty, abuse resistant, balanced, alkali resistant, open weave, glass fiber mesh. Use mesh weights which comply with requirements of Florida Product Approval.

2.08 FINISH COAT

A. Manufacturer's standard acrylic with color fast mineral pigments and meeting the following:

1.	Abrasion Resistance	ASTM D968	Very slight smoothing
2.	Mildew Resistance	MIL-STD-810	No growth
3.	Accelerated Weathering	ASTM G23	No deterioration
4.	Salt spray Resistance	ASTM B117	No deleterious effects

2.09 SEALANT

A. Manufacturer approved polyurethane sealant and complying with ASTM C920, Class 25. Provide primer and backer rod as recommended by sealant and EIFS manufacturer. Color of sealant shall closely match color of EIFS finish and as selected by the Owner.

PART 3 -- EXECUTION

3.01 EXAMINATION

A. Examine substrate and existing conditions to determine that substrate is acceptable to manufacturer's recommendations. Do not proceed with installation until deficiencies are corrected.

3.02 SURFACE PREPARATION

A. Perform surface preparation in accordance with manufactures recommendations and instructions.

3.03 INSTALLATION

A. General

1. Install EIFS as indicated and in strict accordance with manufacturer's installation instructions and shop drawings. Install EIFS only by trained applicators and approved by the EIFS manufacturer.

2. Provide adequate protection of adjacent surfaces to prevent damage during EIFS installation.

B. Insulation Board

1. Place horizontally from level base line. Stagger vertical joints and interlock corners. Butt joints tightly. Mechanically attach insulation to substrate as recommended by manufacturer, but not more than 2 feet (600 mm) horizontally and vertically. Do not leave insulation exposed, without approval of insulation manufacturer and Engineer.

C. Reinforcing Fabric

1. Install heavy duty reinforcing fabric in accordance with manufacturer's instructions for an impact resistant installation. Provide diagonal reinforcement at opening corners, backwrapping, and any other reinforcement recommended by EIFS manufacturer.

2. Provide heavy duty reinforcing fabric as required to meet wind debris requirements. .

D. Base Coat

1. Mix base coat in accordance with manufacturer's instructions. Apply to provide complete coverage of fiberglass reinforcing fabric, panel joints and fasteners. Apply base coat to level out surface areas.

E. Finish Coat

1. Apply and level finish coat in accordance with manufacturer's recommendations and in one operation. Obtain final texture by trowel, float, or spray application to achieve approved finish. Provide finish surfaces that are plumb and smooth, with no deviation greater than ¼-inch (6 mm) in 10-feet (3000 mm).

3.03 JOINT SEALANT

A. Prior to sealing, remove loose matter from joint. Ensure that joint is dry and free of foreign matter. Apply primer as required by sealant and EIFS manufacturers.

B. Install sealant in accordance with manufacturer's recommendations and instructions. Use gun having nozzle size that fits joint width. Fill joint solidly with sealant without air pockets. Tool sealant to provide a uniform, smooth and wrinkle free joint. Clean adjacent surfaces to remove excess sealant.

3.04 CLEANUP

A. Remove temporary protection of adjacent surfaces and repair any areas which were damaged to the satisfaction of the Engineer.

- END OF SECTION -

SECTION 07270

FIRESTOPPING

PART 1 -- GENERAL

1.01 THE REQUIREMENT

A. The CONTRACTOR shall furnish and install firestopping material, or combination of materials, at openings and voids in, or at periphery of fire-rated construction, in locations as follows:

1. Penetrations through fire-rated floor slabs, both empty holes and holes accommodating items such as cables, pipes, ducts, conduits, etc.
2. Penetrations through fire-rated walls and partitions.
3. Openings between tops of walls and floor or roof slabs.
4. Penetrations of vertical service shafts.
5. Expansion joints in walls, floors, and wall and floor assemblies.
6. Openings and/or penetrations through smoke barriers, or special compartmentalized areas.

1.02 RELATED WORK SPECIFIED ELSEWHERE

A. Division 1 - General Requirements

B. Section 07920 - Sealants and Caulkings

C. Firestopping of penetrations caused by mechanical sources is covered in Division 15.

D. Firestopping of penetrations caused by electrical sources is covered in Division 16.

1.03 QUALITY ASSURANCE:

A. General: Provide firestopping materials that expand to fill cavities or provide adhesion to substrates, and that will maintain seal under normal expected movements of substrate.

B. U.L. Classification: Provide firestopping materials that are currently classified with U.L. as "Fill, Void, or Cavity Materials" and Through-Penetration Firestop Systems".

C. Fire Tests: Provide firestopping materials that have been tested in accordance with ASTM E814 "Methods for Fire tests of Through-Penetration Firestops".

1.04 SUBMITTALS

A. In accordance with the procedures and requirements set forth in Section 01300 - Submittals, submit the following:

1. Product data on characteristics, performance, and limitation criteria.

2. Manufacturer's installation instructions.

3. Certification that products meet or exceed requirements.

4. U.L. Approved Detail Drawings.

B. Submit shop drawings showing proposed material, reinforcement, anchorage, fastenings, and method of installation. Construction details shall accurately reflect actual job conditions.

1.05 QUALITY ASSURANCE

A. A manufacturer's direct representative (not distributor or agent) to be on-site during initial installation of firestop systems to train appropriate CONTRACTOR personnel in proper selection and installation procedures. This will be done per manufacturer's written recommendations published in their literature and drawing details.

B. Firestop System installation must meet requirements of ASTM E-814, UL 1479 or UL 2079 tested assemblies that provide a fire rating equal to that of construction being penetrated.

C. Proposed firestop materials and methods shall conform to applicable governing codes having local jurisdiction.

D. Firestop Systems do not reestablish the structural integrity of load bearing partitions/assemblies, or support live loads and traffic. Installer shall consult the structural engineer prior to penetrating any load bearing assembly.

E. Engage an installer with a minimum of 5 years experience and who is certified, licensed, or otherwise qualified by firestopping manufacturer as having been provided the necessary training to install manufacturer's products per specified requirements.

1.06 DELIVERY, STORAGE, AND HANDLING

A. Deliver materials undamaged in manufacturer's clearly labeled, unopened containers, identified with brand, type, and UL label where applicable.

B. Coordinate delivery of materials with scheduled installation date to allow minimum storage time at job-site.

C. Store materials under cover and protect from weather and damage in compliance with manufacturer's requirements, including temperature restrictions.

D. Comply with recommended procedures, precautions or remedies described in material safety data sheets as applicable.

E. Do not use damaged or expired materials.

1.07 PROJECT CONDITIONS

A. Do not use materials that contain flammable solvents.

B. Schedule installation of firestopping after completion of penetrating item installation but prior to covering or concealing of openings.

C. Verify existing conditions and substrates before starting work. Correct unsatisfactory conditions before proceeding.

D. Weather conditions: Do not proceed with installation of firestop materials when temperatures exceed the manufacturer's recommended limitations for installation printed on product label and product data sheet.

E. During installation, provide masking and drop cloths to prevent firestopping materials from contaminating any adjacent surfaces.

PART 2 -- PRODUCTS

2.01 ACCEPTABLE MANUFACTURERS

A. Firestopping materials shall be products as produced by the following manufacturers, or equal:

1. Dow Corning Corporation, Midland, Michigan 48686.

2. Electrical Products Division / 3M, St. Paul, Minnesota 55144

2.02 MATERIALS

A. Provide firestopping materials of commercially manufactured products complying with the following minimum requirements and as listed in Underwriters Laboratories, Inc. -Building Materials Directory.

1. ASTM E84 or UL 723 with a flame spread of 25 or less; smoke development rating of 50 or less; fuel contribution of 50 or less.

2. Non-toxic and non-corrosive during each stage of application and during fire conditions.

3. Penetrations: ASTM E814 or UL 1479 with 2 hour ratings or as shown on Drawings.

4. Joints: UL 2079 2-hour rating or as shown on Drawings.

5. Non-combustible when tested in accordance with ASTM E136.

6. Materials shall impede the passage of smoke and gases.

B. Firestopping materials / constructions shall constitute one or more of the following products, and shall be compatible with the material to which it is applied.

1. Dow Corning:
    a. Fire Stop Foam (2-part silicone elastomer).
    b. Fire Stop Sealant (1-part silicone elastomer).
2. 3M
    a. CP-25 Caulk.
    b. 303 Putty.
    c. FS-195 Wrap / Strip.
    d. CS-195 Composite Strip.
    e. 7900 Series Penetration Sealing Systems.
3. Damming Materials: Products compatible with the above materials as certified by the manufacturer.

B. Firestopping materials shall be asbestos-free and capable of maintaining an effective barrier against flame, smoke, and gasses in compliance with the requirements of ASTM E814 and UL 1479.

C. On insulated pipe, the fire-rating classification must not require removal of the insulation.

D. The rating of the firestops shall be in no case less than the rating of the time-rated floor or wall assembly.

2.03 MIXING

A. Mix silicon components in accordance with manufacturer's instructions.

PART 3 -- EXECUTION

3.01 PREPARATION

A. Clean surfaces to in be in contact with firestoping materials of dirt, grease, oil, loose materials, rust, or other substances that may affect proper fitting or the required fire resistance.

B. Exposed seals: Use masking tape to protect adjacent finished substrate.

3.02 INSTALLATION

A. Install firestopping materials in strict accordance with UL through- penetrations systems requirements and manufacturer's instructions.

B. Seal all holes or voids made by penetrations to ensure an effective smoke barrier.

C. Unless protected from possible loading or traffic, install firestopping materials in floors having void openings of four (4) inches or more to support the same floor load requirements.

3.03 MIXING

A. Mix and prepare materials in compliance with the manufacturer's directions.

B. Store materials in tightly covered containers. Maintain containers used in storage, mixing, and application of firestopping in a clean condition, free of foreign materials and residue.

C. Mix materials to produce a uniform density and as required for application of the materials.

3.04 INSPECTION

A. Examine the substrates to receive firestopping and the conditions under which the work is to be performed and notify the ENGINEER in writing of any conditions detrimental to the proper and timely completion of the work and performance of the firestopping. Do not proceed with the work until unsatisfactory conditions have been corrected in a manner acceptable to the material manufacturer and ENGINEER.

B. Commencement of firestopping work shall be interpreted as proof of acceptability of the substrates, by the applicator and the applicator's acceptance of responsibility for any failure of bond between installation of firestopping and substrate in any particular area.

C. Do not apply materials over incompatible steel primers, dirt, rust, grease, moisture or other conditions unacceptable according to the manufacturer's instructions.

3.05 FIELD QUALITY CONTROL

A. Examine sealed penetration areas to ensure proper installation before concealing or enclosing areas.

B. Keep areas of work accessible until inspection by applicable code authorities.

C. Inspection of through-penetration firestopping shall be performed in accordance with ASTM E 2174, “Standard Practice for On-Site Inspection of Installed Fire Stops” or other recognized standard.

D. Perform under this section patching and repairing of firestopping caused by cutting or penetrating of existing firestop systems already installed by other trades.

3.06 ADJUSTMENT AND CLEANING

A. Upon completion of work, clean spattered surfaces. Remove spattered materials by methods of washing and scraping, using care not to scratch or otherwise damage finish surfaces. Clean with manufactures recommended solution.

B. Protect work of other trades, whether to be coated or not, against damage by the work. Correct damage by cleaning, repairing or replacing and recoating. Leave all work in undamaged condition.

C. Take precautions to ensure that workmen and work areas are adequately protected from fire hazards and health hazards resulting from handling, mixing and application of firestopping.

- END OF SECTION -

SECTION 07510

BUILT-UP BITUMINOUS ROOFING

PART 1 – GENERAL

1.01 THE REQUIREMENT

A. The Contractor shall furnish and install 20-year guaranteed built-up roofing systems and all appurtenant work, complete, and shall coordinate all of the work hereunder with the related work specified in other Sections, all in accordance with the requirements of the Contract Documents.

1.02 RELATED WORK SPECIFIED ELSEWHERE

A. Section 06100 - Rough Carpentry

B. Section 07600 - Flashing and Roofing Accessories

1.03 REFERENCE SPECIFICATIONS, CODES, AND STANDARDS

A. Federal Specifications

1. SS-A-701B — Asphalt, Petroleum (Primer, Roofing, and Weatherproofing).
2. SS-C-153C — Cement, Bituminous, Plastic.

B. Commercial Standards

1. ASTM D 41 — Specification for Asphalt Primer Used in Roofing, Dampproofing, and Waterproofing.
2. ASTM D 226 — Specification for Asphalt-Saturated Organic Felt Used in Roofing and Waterproofing.
3. ASTM D 249 — Specification for Asphalt Roll Roofing (Organic Felt) Surfaced with Mineral Granules.
4. ASTM D 250 — Specification for Asphalt-Saturated Asbestos Felt Used in Roofing and Waterproofing.
5. ASTM D 312 — Specification for Asphalt Used in Roofing.
6. ASTM D 1668 — Specification for Glass Fabrics (Woven and Treated) for Roofing and Waterproofing.
7. ASTM D 1863 — Specification for Mineral Aggregate Used on Built-up Roofs.

8.	ASTM D 1866	Test Method for Translucency of Mineral Aggregate Used on Built-Up Roofs.
9.	ASTM D 2178	Specification for Asphalt Glass Felt Used in Roofing and Waterproofing.
10.	ASTM D 2626	Specification for Asphalt-Saturated and Coated Organic Felt Base Sheet Used in Roofing.
11.	FM	Factory Mutual.
12.	U/L	Underwriters Laboratories, Inc.
13.	FS HH I 1972/GEN	Insulation Board, Thermal, Faced, Polyurethane or Polyisocyanurat

C. Trade Standards

1.	NRCA	National Roofing Contractors Association.

D. Manufacturer's Standards

1. In addition to the standards listed above, the roofing products and their installation shall be in accordance with the manufacturer's published recommendations and specifications.

1.04 SUBMITTALS

A. Submittals shall be in accordance with the requirements of Section 01300 entitled "Submittals".

B. Plan layouts of the proposed roofing (minimum scale shall be 1/8 inch = 1 foot) shall be submitted. The layout shall identify the complete scope of work, details of parapet flashings, equipment support area details, pipe and other roofing penetration details as required for a complete installation. The Contractor shall coordinate all dimensions associated with roof-mounted equipment and identify them on the roofing layout.

C. The manufacturer's specifications, literature, and published installation instructions for each major roofing element, product or system shall be submitted to the Engineer. Shop drawings showing sizes, shapes, thickness, types of materials, finishes, fabrication details, anchors, connections, expansion joints and installation instructions shall be provided at large scale on full size drawings. Provide samples of each product and color samples of cap sheet.

D. Florida Product Approval for use in the High Velocity Hurricane Zone.

E. Roofing shall be applied by a roofing contractor, approved by the Contractor, through the roofing manufacturer, in writing, with a copy of such approval submitted to the Engineer.

F. A certification from the manufacturer that the proposed roofing flashing and accessories are covered by the manufacturer's 20 year system warranty.

G. After installation of the roofing, the Contractor shall furnish to the Engineer a signed affidavit that the roof complies with the requirements of these Specifications and the manufacturer's recommendations for the class and type of roof specified.

H. The Contractor shall furnish the Engineer with duplicate signed copies of the Roof Guarantee as specified in Section 01300 entitled "Submittals". A sample copy of the guarantee, on the form that will be used for the actual guarantee, shall be submitted with the shop drawings, for review.

1.05 ENVIRONMENTAL REQUIREMENTS

A. Do not apply roofing membrane during inclement weather.

B. Do not apply roofing membrane to damp or frozen deck surfaces.

C. Do not expose materials vulnerable to water or sun damage in quantities greater than can be weatherproofed during the same day.

D. At lower air temperatures, to assure sound adhesion, care must be exercised to provide asphalt, at the point of application, at the asphalt's equiviscous temperature (EVT) plus 20 degrees Fahrenheit or at 400 degrees Fahrenheit, which ever is higher.

1.06 PRODUCT DELIVERY, STORAGE, AND HANDLING

A. Manufactured materials shall be delivered in original, unbroken packages, containers, or bundles bearing the name of the manufacturer.

B. All materials shall be carefully stored in a manner that will prevent damage of the products and in an area that is protected from the elements.

1.07 QUALITY ASSURANCE

A. The Contractor shall pay the cost of all test cutting, testing, and repairs. If deviations from written and accepted manufacturer's specifications are found, the Contractor, at its own expense, shall make all corrections necessary to meet the requirements of the Contract Documents, the roofing manufacturer recommendations, and the requirements of the Engineer.

B. The Contractor shall provide a minimum of three site visit inspections by an official manufacturer's representative on all roofing and flashing. Inspections are to be made at the beginning of the job and a minimum of once more while the roofing and/or flashing work is in progress to ensure workmanship is in accordance with the manufacturer's specifications.

C. The Contractor is cautioned that the products specified in these specifications may require the purchase of a minimum quantity from the manufacturer. The minimum purchase quantities may exceed the quantities defined in the Contract Documents. The City or the Engineer will not consider requests for substitutions of specified products unless equal in physical and performance characteristics and accompanied with appropriate credits. The responsibility of providing quantities required shall remain with the Contractor.

1.08 TESTING

A. The Contractor shall retain the services of a testing company to perform testing of the built-up bitumen roofing installed under this Contract.

B. The testing program performed by the testing company will include an infrared imaging test (performed at night) of the roofing membrane and insulation to detect leaks in the system. The test will be conducted in accordance with ASTM C 1153 by a Level III inspector certified by the American Society of Nondestructive Testing, Inc.

C. The roofing system will not be accepted by the City should the testing company detect any leaks in the system. If moisture is detected in the insulation of the substrate, repairs shall be performed by the Contractor at no additional costs to the City. Repairs shall be acceptable to the roofing manufacturer to satisfy the specified guarantee requirements. After repairs are performed, the roofing shall be re-tested by the testing company. The Contractor shall be responsible for the re-testing costs.

D. If the re-tests detect further moisture in the system, then the entire roofing system shall be removed and replaced by the Contractor at its expense.

1.09 GUARANTEE

A. A manufacturer's "No-Dollar-Limit" Guarantee for a period of 20 years is required for all new roofing applications under this Contract. The Contractor shall engage the services of a roofing contractor approved by the manufacturer to install the roofing system subject to the guarantee requirements specified herein. The roofing contractor shall provide the manufacturer with all necessary documentation to ensure the provision of the guarantee. The sources of bitumen shall be acceptable to the roofing manufacturer.

B. All roofing accessories, including flashing, fasteners, roof vents, curb details and other miscellaneous metals and accessories required for the installation shall be supplied by the roofing manufacturer or from other sources acceptable to the manufacturer selected for the installation so that the system guarantee will include all edges, penetrations and other details of the installation.

C. The system guarantee shall promise that for the period of the guarantee, the manufacturer will pay for repairs to stop leaks resulting from natural deterioration of the membranes or poor workmanship in applying the roofing materials or failure of the system to perform as roofing and providing a waterproof, watertight system.

1.10 SERVICES OF MANUFACTURER'S REPRESENTATIVE

A. Inspection and testing will be performed by a Professional Engineering firm or manufacturer’s representative approved by the Engineer.

B. Correct defects and irregularities reported.

1.11 MANUFACTURERS

A. The built-up roofing system shall be as manufactured by Johns Manville, The Garland Company, Tremco Roofing or equal.

PART 2 – PRODUCTS

2.01 ROOFING SYSTEM

A. The roofing system shall be a five ply mineral surfaced fiberglass built up roof over the specified rigid insulation. The system shall be 5GIC by Johns Manville or equal.

2.02 ROOF INSULATION

A. The roof insulation shall consist of rigid roof insulation boards with a minimum total thickness as identified on the drawings, but no less than 3 inches. The boards shall be comprised of a closed cell Polyisocyanurate foam core bonded to fiberglass reinforced facers. The minimum R-value of insulation, when tested in accordance with ASTM C1289, shall be 5.7 (hr-ft2-F)/BTU per inch of thickness. ENRGY 3 by Johns Manville meets the requirements of these Specifications.

B. At locations where tapered roofing is indicated on the Drawings, custom factory-fabricated tapered panels shall be provided over the specified layered roof insulation. The tapered insulation shall be tapered ENRGY 3 by Johns Manville, or equal, over the two layers of specified insulation.

2.03 ASPHALT

A. Asphalt shall meet the requirements of ASTM D 312, Type III. The sources shall be approved by the roofing manufacturer for the purpose of the guarantee.

2.04 ROOF FELTS

A. Roof felts shall be approved by the manufacturer for a 20-year no dollar limit roofing guarantee. Roof felts shall comply with ASTM D 2178, Type VI. Roof felts shall be type G-1 coated ply sheets as classified by Underwriters Laboratories. Glas Ply Premier by Johns Manville meets the requirements of this Section.

2.05 CAP SHEET

A. The cap sheet shall be a mineral surfaced, asphalt coated, fiberglass cap sheet for use in hot applied built-up roofing systems. The cap sheet shall be classified as a Type G-2 Coated Cap sheet by Underwriter's Laboratories, and shall meet the requirements of ASTM D 3909. GlasKap by Johns Manville meets the requirements of this section.

2.06 ROOFING ACCESSORIES

A. Roofing Accessories are specified in Section 07600 entitled "Flashing and Roofing Accessories".

PART 3 – EXECUTION

3.01 SHIPPING, HANDLING AND STORAGE

A. Deliver roofing materials to the job site in manufacturer's original unopened packing with seals intact. Store materials off the ground and under cover. Store roof goods on end. Handle materials to avoid damage or contamination. Protect building and adjacent areas from bitumen spillage and repair or replace damage at no additional cost to the City.

3.02 JOB CONDITIONS

A. Surfaces to which roofing is to be applied shall be smooth, even, sound, thoroughly clean and dry and free of defects which would adversely affect application of this work. Surfaces which do not meet the tolerances imposed within the sections governing their installation or which contain defects shall be repaired or replaced prior to installation of this work. Application of the roofing will be considered acceptance of the roof deck and approval by the Contractor as an acceptable base for roofing.

B. Coordinate with sheet metal, plumbing, electrical, HVAC and mechanical subcontractors to insure all roofing penetrations are in place prior to commencement of work.

C. Proceed with the roofing and associated work only when existing and forecasted weather conditions will permit the work to be performed as scheduled.

D. Prior to commencement of installation of the roofing, a pre-roofing conference is to be held by the Contractor. The Contractor, Roofing Contractor, Engineer, City's representative and the Roofing Manufacturer Representative shall be present to discuss any and all details, procedures and schedules.

3.03 GENERAL ROOFING INSTALLATION

A. Fabricate and install the built-up roofing system described herein in accordance with the roofing manufacturer's requirements.

B. Install insulation board to roofing in accordance with manufacturer recommendations for the appropriate roof deck. All seams shall be taped. Bends and covers shall be cut to fit snug.

C. Cant strips and tapered edge strips shall be provided at all intersections of roof surfaces with vertical walls, parapets, curbs, and accessories which do not have built-in cants, and shall be miter cut at corners. Cant strips and tapered edge strips shall be firmly attached in place prior to roof application.

D. Heat and apply asphalt to the roofing surface at temperatures recommended by the roofing manufacturer using apparatus capable of providing controlled temperatures. Asphalt which has been burned shall be discarded. Apply asphalt evenly, leaving no bare spots at a rate of 20 pounds per 100 square feet. Lap piles 4-inches at edge and 6-inches at ends. Embed cap sheet and lapped edges and ends in full hot application as steep asphalt. Nail through laps and along center of cap sheet; stagger nails. Broom in each ply to complete embedment. Solid mop heated bitumen under and between felts. Provide complete uniform coating. Felt shall not touch felt. Lay felts parallel to long dimension of

roof. Broom or press felts into heated bitumen providing tight, smooth lamination without wrinkles, buckles, kinks, fishmounts, pockets, or busters.

E. Flashing and all other connections of roofing with other work shall be completed before the application of the finishing surface. Bed all metal base flashings, gravel stops and similar items in roofing cement or bitumen after all felts are in place. Base flashings and gravel stops shall be stripped with two piles of roofing felt over the metal and embedded in roofing cement.

F. Coordinate work with sheet metal and the work of other trades. Finish areas as rapidly as practicable after completion of the other work. Incomplete roofing shall be protected from dampness by a light coat of asphalt when final coating is delayed.

3.04 ROOFING

A. Install a complete 20-year guaranteed roof fully complying with the specifications and recommendations of the roofing manufacturer.

B. At all edges and similar locations where seepage of bitumen is possible, the bitumen shall be applied to within 4-inches of such edge or location and this 4-inches is to be coated with a heavy layer of roof cement or asphalt, into which the felt is to be embedded.

3.05 SHEET METAL

A. Coordinate flashing and trim work with the installation of roofing, waterproofing, piping, existing building, and other adjoining and substrate work.

3.06 PROTECTION AND CLEANING

A. The Contractor shall protect the work of other trades. Work damaged by an operation under this section shall be repaired or replaced at no expense to the City. All soiled adjoining surfaces shall be carefully cleaned. All debris and surplus material resulting from work under this section shall be removed from the premises.

- END OF SECTION -

SECTION 07600

FLASHING AND ROOFING ACCESSORIES

PART 1 – GENERAL

1.01 THE REQUIREMENT

A. The Contractor shall furnish and install roofing sheet metal work and related items necessary for a complete installation, as indicated on the Drawings and specified herein, including, but not limited to the following: base flashings; pitch pans, scuppers, and other sheet metal work in conjunction with roof drainage; pipe and stack flashings, and similar items where furnished by equipment suppliers; flashings for ducts, exhaust piping, equipment piping, conduit, etc., penetrating roofing that may be required.

1.02 SUBMITTALS

A. Submit shop drawings and samples for review in accordance with Section 01300 entitled "Submittals". Provide sizes, shapes, thicknesses and types of materials, finishes fabrication details, anchors, connections and expansion joints in relation to adjacent work.

B. Submit a 12-inch square sample of wall flashing, angle clamping bar and other metal work specified. Deliver samples to a field location as directed by the Engineer.

1.03 APPLICABLE STANDARDS

A. Except as otherwise shown or specified, comply with applicable manual by (SMACNA) Sheet Metal and A/C Contractors National Association.

B. Except as otherwise shown or specified, comply with the recommendations and instructions of the manufacturer of the sheet metal being installed.

C. All materials and installation shall conform to or exceed the requirement of all local codes.

1.04 GUARANTEE

A. The roofing guarantee specified in Section entitled "Built-Up Bituminous Roofing" shall cover flashings and accessories specified in this section. The flashing and edge details shall be as required by the roofing manufacturer to satisfy conditions of the guarantee. The details shown on the Drawings are intended to provide minimum standards required for the guarantee.

B. All roofing accessories, including flashing, fasteners, roof vents, curb details and other miscellaneous metals and accessories required for the installation shall be supplied by the roofing manufacturer or from other sources acceptable to the manufacturer selected for the installation so that the system guarantee will include all edges, penetrations and other details of the installation.

PART 2 – PRODUCTS

2.01 FLASHING

A. Flashing shall be 0.040-inch aluminum, minimum. The system shall be Presto Lock Facia System by Johns Manville, or equal.

B. Coping system shall be Presto Lock coping System by Johns Manville, or equal.

2.02 CANT STRIPS

A. Cant Strips shall be Fes-Cant Plus Cant Strip by Johns Manville or equal. Trips shall be a high density, laminated board made of high strength fibers and expanded peslites.

2.03 ROOF VENTS

A. Roof vents shall be provided for all roofing applications. One vent per 1000 square feet of applications shall be provided. One vent per 1000 square feet of roofing area shall be provided. The vents roofing area shall be provided. The vents shall be FP-10 One Way Roof Vents by Johns Manville or equal.

2.04 PLASTIC CEMENT

A. Plastic cement shall conform to ASTM D 2822 and shall be supplied by the roofing manufacturer.

2.05 FASTENERS

A. Nails, bolts, and nuts, screws, washers, etc., shall be stainless steel and shall be supplied by the roofing manufacturer.

2.06 ANCHORS

A. Anchors for fastening items to concrete shall be stainless steel machine screws or bolts and Rawl plug inserts of Phillips Red Head concrete anchors of the size and type noted or required.

2.07 BITUMINOUS PLASTIC CEMENT

A. Bituminous plastic cement shall conform to FS SS-C-153.

2.08 ASPHALTIC MATERIAL

A. Asphalt primers shall conform to FS S-A-701. Coating asphalt shall have brushing consistency conforming to FS SS-R-451.

2.09 GUTTERS AND DOWNSPOUTS

A. Material: Minimum 0.050 inch thick aluminum.

B. Design: Manufacture gutters tapered and notched to provide telescoping joint. Design gutters and downspouts to accommodate expected thermal movement.

C. Supports and Fasteners: Provide manufacturers' standard straps, brackets and fasteners, spaced at maximum 60-inches on center or as recommended by the manufacturer. Finish of supports, brackets and fasteners shall match gutter and downspout.

D. Accessories: Provide end caps, flashing, trim, and other items required for a complete installation.

E. Finish: Baked on Kynar, with 20 year warranty.

F. Color: Color for the downspout shall be selected by the Engineer from the Supplier's standard color chart.

2.10 PARAPET COPING

A. Coping cover plates, anchor clips, splice plates and accessories shall be Presto Lock Coping System by Johns Manville or equal.

PART 3 – EXECUTION

3.01 SHIPPING, HANDLING AND STORAGE

A. Store materials off the ground to avoid damage. Protect from bitumen spillage and repair or replace damage at no additional cost to the City.

3.02 JOB CONDITIONS

A. Coordination: Coordinate with the roofing system, sheet metal, plumbing, electrical, HVAC and mechanical subcontractors to insure that all items are in place prior to commencement of work.

B. Climatic Conditions: Proceed with the roofing and associated work only when existing and forecasted weather conditions will permit the work to be performed as scheduled.

3.03 SHEET METAL INSTALLATION

A. General: Coordinate metal flashing and trim work with the installation of roofing, waterproofing, piping, existing building, and other adjoining and substrate work. Surfaces to be coated shall be smooth and clean. The installer must examine the substrate and the conditions under which the metal flashing will be installed, and notify the Contractor in writing of any unsatisfactory conditions. Do not proceed with installation until unsatisfactory conditions have been corrected in a manner acceptable to the installer. Flanges or gravel stops, vent and other flashings, shall be bedded in hot asphalt, set on top of the roofing plies and reinforced with felt strips as specified. Work shall be water tight, with lines, arises and angles sharp and true. Surfaces shall be free from waves and buckles.

B. Fabrication: Fabricate and install work described herein in accordance with the applicable standard described and illustrated in the National Association, Inc. publication "Architectural Sheet Metal Manual".

C. Flashings: Base and all other flashings shall be watertight and of a bondable type.

D. Accuracy: Fabricate and install work with lines and corners of exposed units true and accurate. Form exposed faces flat and free from buckles, excessive waves and avoidable tool marks, considering the temper and reflectivity of the metal. Provide uniform, neat seams with minimum exposure of solder welds, and sealant. Except as otherwise shown, fold back the sheet metal to form a hem on the concealed side of exposed edges.

E. Fasteners: Conceal fasteners and expansion provisions wherever possible in exposed work, and locate so as to minimize the possibility of leakage. Cover and seal work as required for a tight installation. Fasten sheet metal items as indicated or required to provide rigid, secure installation free of warp. Fastenings shall be made in such a manner as not to impair the watertight integrity of the installation. Exposed face nailing will not be permitted.

F. Laps: For embedment of metal flanges in roofing or composition flashing or stripping, extend flanges for a minimum of 4-inch embedment. Lap seams of sheet metal in direction of flow. Single lock flat seams, heliarc weld or double-lock and mallet flat. Lap seams occurring in members sloping 45 degrees or greater shall be lapped 4-inch minimum and be bedded in flashing cement. Provide loose-locked expansion joints a maximum of 20 feet and a minimum of 8 feet from corners. On vertical surfaces, lap 2 piece flashings a minimum of 3 inches.

G. Protection: Separate dissimilar metals from each other by painting each metal surface in the area of contact with a heavy application of bituminous coating, or by other permanent separation as recommended by the manufacturers of the dissimilar metals. The flashing subcontractor shall advise the Contractor of required procedures for protection of the completed flashing and trim. Furnish such advice for period of installation of other work, and also for the remainder of the construction period.

3.04 COORDINATION

A. Coordinate flashing work with the work of other trades. Adjacent work shall be kept clean and shall not be injured or defaced in any way.

3.05 PROTECTION AND CLEANING

A. The Contractor shall protect the work of other trades. Work damaged by an operation under this section shall be repaired or replaced at no expense to the City. All soiled adjoining surfaces shall be carefully cleaned.

B. All debris and surplus material resulting from work under this section shall be removed from the premises.

- END OF SECTION -

SECTION 07920

SEALANTS AND CAULKING

PART 1 – GENERAL

1.01 THE REQUIREMENT

A. The Contractor shall provide sealant and caulking work required for a complete installation as is indicated on the Drawings and specified herein. The required applications of sealants and caulking include, but are not necessarily limited to, the following general locations:

1. Masonry joints, exterior and interior.
2. Joints at penetrations of walls, decks by piping, doors, windows, louvers and other services and equipment.
3. Joints between items of equipment and other construction.
4. Joints in concrete.

1.02 SUBMITTALS

A. Submit shop drawings and color samples of sealant for review in accordance with the Section entitled "Submittals".

B. Submit a two year guarantee on sealant type caulking work against joint failure. Joint failure is defined as leaks of air or water; evidence of loss of cohesion; fading of sealant material; migration of sealant; evidence of loss of adhesion between sealant and joint edge.

1.03 ACCEPTABLE MANUFACTURERS

A. The following list of manufacturer products are acceptable for this Section, subject to conformance with the specified requirements: Tremco, Thiokol, Dymoric or equal.

PART 2 – PRODUCTS

2.01 MATERIALS

A. Primer: Where required by sealant manufacturer, the primer shall be a compound designed to insure the adhesion of sealant. Material shall be provided by the sealant manufacturer and shall be selected for compatibility with substrate.

B. Sealant

1. Type 1: Multi-component, non-sag, low-modulus polyurethane rubber sealant meeting ASTM C-920, Type M, Grade NS, Class 25, use NT, M, A, and O. Capable of withstanding 50% in extension or compression such as Sikaflex-2C NS/SL, Sika Corporation, or approved equal.

2. Type 2: Single component polyurethane sealant meeting ASTM C-920, Type S, Grade NS, Class 25, Use NT, M, A, and O. Capable of withstanding 25% in extension or compression such as Sikaflex 1A by Sika Corporation or approved equal.

3. Type 3: Single component, low-modulus moisture curing silicone meeting ASTM C 920, Type S, Grade NS, Class 25, Use NT, M, G, and A. Capable of withstanding 50% extension and compression. Pecora 890 by Pecora Corporation, or approved equal.

4. Type 4: Single component, mildew resistant, moisture-curing silicone meeting ASTM C-920, Type S, Grade NS, Class 25, Use NT, M, G, and A. Pecora 898 by Pecora Corporation, or approved equal.

5. Type 5: Single component, acrylic latex meeting ASTM C-834. AC-20+ Silicone by Pecora Corporation, or approved equal.

6. Type 6: High grade butyl sealant meeting Federal Specification TT-S-00-1657. BC-158 by Pecora Corporation or approved equal.

7. Type 7: Multi-component chemical resistant polysulfide sealant conforming to ASTM C-920, Type M, Grade NS, Class 25 such as Sonolastic Two Part by BASF Construction Chemicals, or approved equal.

8. Type 8: Non-sag, Multi Component, traffic grade polyurethane sealant meeting ASTM C920, Type 19, Grate NS, Class 25, use T, M, A, and O. DynaTread by Pecora Corporation or approved equal.

C. Joint Backing shall be closed cell foam. Material shall be nonreactive with caulking materials and non-oily. Minimum density shall be 3.24 pcf. Use no asphalt or bitumen-impregnated fiber with sealants.

D. Joint cleaner shall be as recommended by sealant or caulking compound manufacturer.

E. Joint Primer shall be as recommended by sealant manufacturer.

F. Bond Breaker tape shall be either polyethylene or plastic as recommended by the sealant manufacturer.

G. Color: Where manufacturer’s standard colors do not closely match materials being sealed, provide a custom color.

PART 3 – EXECUTION

3.01 GENERAL

A. Comply with sealant manufacturer's printed instructions except where more stringent requirements are shown or specified and except where manufacturer's technical representative directs otherwise.

3.02 SHIPPING, HANDLING AND STORAGE

A. Store and handle materials so as to prevent the inclusion of foreign matter or the damage of materials by water or breakage. Procure and store in original containers until ready for use. Material showing evidence of damage will be rejected.

B. Store and handle materials so as to prevent the inclusion of foreign matter or the damage of materials by water or breakage. Procure and store in original containers until ready for use. Material showing evidence of damage shall be rejected.

3.03 INSTALLATION

A. Employ only proven installation techniques, which will insure that sealants will be deposited in uniform, continuous ribbons without gaps or air pockets, with complete "wetting" of the joint bond surface equally on opposite sides. Except as otherwise indicated, the Contractor shall fill the sealant rabbet to a concave surface, slightly below adjoining surfaces. Where horizontal joints are between a horizontal surface and a vertical surface, fill joint to form a slight cove, so that joint will not trap moisture and dirt.

B. Install sealants to depths as specified, or if not, as recommended by the sealant manufacturer and as follows:

1. Moving Joints: For normal moving joints sealed with elastomeric sealants but not subject to traffic, fill joints to a depth equal to 50% of joint width, but not more than 1/2-inch deep or less than 1/4-inch deep.

2. Sealed Joints: For joints sealed with non-elastomeric sealants and caulking compounds, fill joints to a depth in the range of 75% to 125% of joint width.

3. Thresholds: Set thresholds in full bed of caulking compound; remove excess materials.

3.04 SCHEDULE

Schedule of Sealants

Application	Sealant	Color
Vertical and horizontal joints bordered on both sides by concrete, masonry, precast concrete, EIFS, or other porous building material.	Type 2	To closely match adjacent surfaces or mortar and as selected by the City.
Vertical and horizontal joints bordered on both sides by painted metals, anodized aluminum, mill finished aluminum, PVC, glass or other non-porous building material.	Type 3	To closely match adjacent surfaces and as selected by the City.
Masonry expansion and control joints less than 1¼" wide.	Type 2	To closely match adjacent surfaces and as selected by the City.
Masonry expansion and control joints equal or greater than 1¼ inches wide and not to exceed 2”.	Type 1	To closely match adjacent surfaces and as selected by the City.

Application	Sealant	Color
Interior – wood trim and finish joints.	Type 5	Color to be selected by City
Sanitary areas, joints in ceramic tile, around plumbing fixtures, countertops, and back splashes. See Note 1.	Type 4	To closely match adjacent surfaces and as selected by the City.
Perimeter sealing of doors, windows, louvers, piping, ducts, and electrical conduit. See Note 2.	Type 2 OR Type 3	To closely match adjacent surfaces and as selected by the City.
Below thresholds.	Type 6	Manufacturer's standard
Submerged in liquids. See Note 4.	Type 1	Manufacturer's standard
Submerged in liquids with high concentration of chlorine (> 2 ppm).	Type 7	Manufacturer's standard
Horizontal Joints exposed to vehicular or pedestrian traffic.	Type 8	To closely match adjacent surfaces.
Other joints indicated on the drawings or customarily sealed but not listed.	Type recommended by manufacturer	To closely match adjacent surfaces and as selected by the City.

Note 1: Sealant for Laboratory Countertop shall be as recommended by countertop manufacturer.

Note 2: Provide UL approved sealants for penetrations thru fire-rated walls and as specified in Section 07270.

Note 3: Sealants which will come in contact with potable water shall meet the requirements of NSF 61.

Note 4: Where sealant will be immersed in liquid chemicals verify compatibility prior to installation of sealant.

3.05 PROTECTION OF ADJOINING SURFACES

A. Prime or seal the joint surfaces wherever shown or recommended by the sealant manufacturer. Do not allow primer/sealer to spill or migrate onto adjoining surfaces.

3.06 SEALANT BACKER ROD

A. Install sealant backer rod for liquid elastomeric sealants, except where shown to be omitted or recommended to be omitted by sealant manufacturer for the application shown.

3.07 BOND BREAKER

A. Install bond breaker tape wherever shown and wherever required by manufacturer's recommendations to insure that elastomeric sealants will perform properly.

3.08 SPILLAGE

A. Sealants or compounds shall not overflow or spill onto adjoining surfaces, or to migrate into the voids of adjoining surfaces. Masking tape or other precautionary devices shall be used to prevent staining of adjoining surfaces.

3.09 CURING

A. Sealants and caulking compounds shall be cured in compliance with manufacturer's instructions and recommendations, to obtain high early bond strength, internal cohesive strength, and surface durability.

3.10 CLEANING

A. Excess and spillage of compounds shall be promptly removed as the work progresses. Adjoining surfaces shall be cleaned by whatever means may be necessary to eliminate evidence of spillage. Do not damage the adjoining surfaces or finishes.

- END OF SECTION -

DIVISION 8 – DOORS AND WINDOWS

SECTION 08110

STEEL DOORS AND FRAMES

PART 1 – GENERAL

1.01 THE REQUIREMENT

A. The Contractor shall furnish and install steel doors and frames as specified herein and as required for a complete installation.

1.02 MANUFACTURERS

A. The steel doors and frames shall be as manufactured by Curries, Ceco, Amweld (Black Mountain Door), or approved equal.

1.03 RELATED WORK SPECIFIED ELSEWHERE

A. Section 08710 – Finish Hardware

B. Section 09900 – Painting

1.04 REFERENCES

A. Florida Building Code

B.	UL 10B	Fire Tests of Door Assemblies
C.	ASTM A366	Specification for Steel, Sheet, Carbon, Cold-Rolled, Commercial Quality.
D.	NFPA 80	Standard for Fire Doors and Windows
E.	NFPA 101	Life Safety Code
F.	U.L.	Underwriter's Laboratories
G.	WHI	Warnock Hersey International, Division of Inchcape Testing Services
H.	ANSI/DHI A115	Series Specifications for Steel Door and Frame Preparation for Hardware
I.	ANSI/SDI 100	Recommended Specifications: Standard Steel Doors and Frames
J.	ASTM A153	Standard Specification for Zinc Coating (Hot-Dip) on Iron and Steel Hardware
K.	ASTM A366/A 366M	Standard Specification for Steel, Sheet, Carbon, Cold-Rolled Commercial Quality

L. ASTM A525 — Standard Specification for General Requirements for Steel Sheet, Zinc-Coated (Galvanized) by the Hot-Dip Process

M. ASTM E152 — Standard Methods of Fire Tests of Door Assemblies

1.05 SUBMITTALS

A. The Contractor shall submit complete shop drawings to the Engineer for review in accordance with Section 01300 entitled “Submittals”. Shop drawings shall indicate dimensions, elevations, construction details, assembly methods, hardware reinforcement and locations, gauges, finish, wall conditions and building location.

B. The submittal shall include the following:

1. Product cut sheets for frames, anchors, door panels and all finish hardware.

2. A complete door schedule indicating the masonry openings versus the proposed doors, doorframes and the associated door hardware. Prior to the submittal, all door openings shall be field-verified by the Contractor.

3. A complete hardware schedule conforming to Section 08710 entitled "Finish Hardware", in compliance with product approval.

4. Installation details, edge distances, material, size, and spacing of anchorage.

5. Locking arrangement.

6. Sealants.

7. Florida Product Approval for use in the High Velocity Hurricane Zone.

C. The Engineer will review and return the submittals to the Contractor. The Contractor shall then submit the accepted package to the Building Departments having jurisdiction over the work for approval. No fabrication or installation shall begin until the Building Department approval is obtained by the Contractor. All permit fees shall be paid for by the Contractor and included in the bid price. The City will not assume responsibility for any cost or schedule impacts due to the approval process of the Building Department. It is the Contractor’s responsibility to customize the submittals based on the Building Department’s published submittal processes.

1.06 PRODUCT APPROVAL NOTICES

A. A prototype of all products supplied under this section shall have a Product Approval Notice. A copy of the notices with all drawings shall be submitted for review. The notice shall indicate that the following tests were conducted on the prototype for small missile impact and large missile impact:

1. Impact Test – Florida Building Code Test Protocols TAS 201, Impact Test Procedure (Large and Small Missile).

2. Uniform Static Pressure Test - Florida Building Code Test Protocols TAS 202, Criteria for Testing Impact and Non-Impact Resistant Building Envelope Components using Uniform Static Air Pressure.

3. Cyclic Wind Pressure Test - Florida Building Code Test Protocols TAS 203. Criteria for testing products subject to Cyclic Wind Pressure Loading.

1.07 QUALITY ASSURANCE

A. Comply with ANSI/SDI 100.

B. Locations where fire-rated door and frame assemblies are required, provide assemblies which comply with NFPA 80 and have been tested and labeled in accordance with ASTM E152 by agency acceptable to governing authorities.

C. Provide certificate or label for fire-rated doors which exceed sizes tested from a independent testing and inspection agency. Certificate or label shall indicate that door and frame assembly conforms to the requirements of the design.

D. Provide stairwell doors which have temperature rise rating of 450 degrees F maximum in 30 minutes of fire exposure.

1.08 DELIVERY, STORAGE AND HANDLING

A. The Contractor shall deliver, store, and handle doors and frames in a manner to prevent damage and deformation. Store on pallets at the job site and undercover to form weather tight enclosure. Spacers shall be provided between doors and frames to prevent metal-to-metal contact. Replace items damaged during delivery, storage, or handling.

PART 2 – PRODUCTS

2.01 STEEL DOORS (INDICATED AS HM – HOLLOW METAL ON DRAWINGS)

A. The Contractor shall provide doors and frames from the same Manufacturer. All doors shall be of flush steel construction and 1-3/4 inch thick. Flush doors shall be constructed of two outer layers of ASTM A366 steel over steel stiffeners and filled with core material as follows:

1. Non Fire-Rated Doors: Fabricate exterior, vestibule and other doors indicated to be insulated in the schedule with foam in place insulation.

2. Fire-Rated Doors: Mineral Fiber Core sufficient to obtain a 250 degree Fahrenheit temperature rating.

B. Both lock and hinge rail edge of the door shall be welded, filled and ground smooth the full height of the door. Lock rail shall be one-piece full height 12-gauge pressed channel. Hinge rail shall be one-piece full height 12-gauge pressed channel, formed and tapped for hinges. Top and bottom of door shall have 12-gauge steel closure channels.

C. Minimum gauges for exterior face sheets of door shall be as follows:

1. Exterior Door: SDI-100, Grade III, extra heavy-duty, Model 4, seamless, 16 gauge for doors less than four feet wide and 14 gauge for doors greater than four feet wide.

2. Interior Door: SDI 100, Grade II, heavy-duty, Model 3, seamless, 18 gauge for doors less than four feet wide and 16 gauge for doors greater than four feet wide.

3. Interior Fire Rated Door: SDI-100, Grade III, extra heavy-duty, Model 4, seamless, 16 gauge for doors less than four feet wide and 14 gauge for doors greater than four feet wide.

D. Comply with ANSI/DHI A115 series specifications for door and frame hardware preparation. Prepare door and frame using final hardware schedule and templates from hardware supplier.

2.02 STEEL DOOR FRAMES

A. Steel doorframes shall be fabricated of 16-gauge cold rolled steel in accordance with ASTM A366. After fabrication frames shall be primed with light gray rust inhibitive primer. Paint color finish shall be selected by the Engineer at the time of the shop drawing submittal.

B. Standard floor knee shall be provided for anchorage to floor.

C. Three sided frames shall have angle spreaders secured to bottom of frame for rigidity during shipment.

D. Frame corners shall be internally reinforced, welded and ground smooth. Adequate reinforcement shall be provided for all hardware, drilled and tapped for field application. Dust clogging of tapped holes by mortar or plaster. Reinforcement shall also be provided for surface applied hardware for which drilling and tapping is done in the field. After fabrication, frame shall be degraded and then prime coated.

E. Punch single leaf frames to receive three silencers on lock jamb. Punch double leaf frames to receive one silencer at each leaf in head members.

2.03 ANCHORS

A. Jamb anchors shall be 12-gauge galvanized flat “T” anchors to suit frame size with legs not less than 2”x10”. Set anchors at every three masonry courses, a minimum of three per jamb at doors. Jamb anchors shall be in accordance with product approval.

B. For cast in place concrete or existing door openings, anchor frame jambs with 3/8” minimum counter-sunk bolts into expansion shield or inserts, with crush-proof sleeves. Provide a minimum of two per jamb. Anchors shall be in accordance with product approval.

C. Floor anchors at doors shall be minimum 16-gauge galvanized sheet steel at each jamb. Clip type anchors with two holes to receive fasteners shall be welded to bottom jambs. Floor anchors shall be in accordance with product approval.

2.04 FINISHES

A. Doors and frames shall be shop galvanized in accordance with Section 05035 entitled "Galvanizing" and field painted per Section 09900 entitled "Painting".

PART 3 – EXECUTION

3.01 FRAME INSTALLATION

A. Frames shall be installed plumb, level, and true to line, rigidly secured in openings. Frames shall be installed in strict accordance with the tested prototype assembly details.

B. Frames in new masonry walls shall be set prior to beginning masonry work. Brace frames until permanent anchors are set. Frames shall be filled with masonry grout as masonry work progresses. Anchors shall be provided in accordance with SDI standards.

C. Frames in existing masonry walls shall be installed using countersunk bolts and expansion shields.

3.02 DOOR INSTALLATION

A. Doors shall be installed plumb, level and true to line. Hardware shall be applied and adjusted to achieve quiet and smooth operation. Installation shall be in accordance with the manufacturer's recommendations.

B. Doors shall fit snugly and close without forcing or binding. Door clearances shall not exceed 1/8 inch at jambs and heads and meeting stiles at pairs of doors. Clearances between bottom of door and finished floor material or threshold shall not exceed 1/4 inch. Frames shall be manufactured and machined to within 1/32 inch for all dimensions.

3.03 PROTECTION

A. The Contractor shall protect installation from damage and touch up scratched areas with same paint used for shop coats. Damaged work shall be repaired or replaced.

3.04 DOOR SCHEDULE

A. Door schedules indicating the door marks, type of door, the approximate building wall openings and the calculated design wind pressures are shown on the Drawings.

- END OF SECTION -

SECTION 08710

FINISH HARDWARE

PART 1 – GENERAL

1.01 THE REQUIREMENT

A. The Contractor shall furnish and install items known commercially as finish or door hardware that are required for swing, sliding, and folding doors, except special types of unique hardware specified in the same sections as the doors and door frames on which they are to be installed.

B. This Section includes the following:

1. Hinges.
2. Key control systems.
3. Lock cylinders and keys.
4. Lock and latch sets.
5. Bolts.
6. Exit devices.
7. Closers.
8. Overhead holders.
9. Miscellaneous door control devices.
10. Door trim units.
11. Protection plates.
12. Weatherstripping for exterior doors.
13. Sound stripping for doors.
14. Automatic drop seals (door bottoms).
15. Astragals or meeting seals on pairs of doors.
16. Thresholds.

1.02 SUBMITTALS

A. General: Submit the following in accordance with Section 01300 entitled "Submittals":

1. Product data including manufacturer's technical product data for each item of door hardware, installation instructions, maintenance of operating parts and finish, and other information necessary to show compliance with requirements.

2. Final hardware schedule coordinated with doors, frames, and related work to ensure proper size, thickness, hand, function, and finish of door hardware.

   a. Final Hardware Schedule Content: Based on hardware indicated, organize schedule into "hardware sets" indicating complete designations of every item required for each door or opening. Include the following information:

      1) Type, style, function, size, and finish of each hardware item.

      2) Name and manufacturer of each item.

      3) Fastenings and other pertinent information.

      4) Location of each hardware set cross referenced to indications on Drawings, both on floor plans and in door and frame schedule.

      5) Explanation of all abbreviations, symbols, and codes contained in schedule.

      6) Door and frame sizes and materials.

      7) Keying information.

   b. Submittal Sequence: Submit final schedule at earliest possible date, particularly where acceptance of hardware schedule must precede fabrication of other work that is critical in the Project construction schedule. Include with schedule the product data, samples, shop drawings of other work affected by door hardware, and other information essential to the coordinated review of schedule.

   c. Keying Schedule: Submit separate detailed schedule indicating clearly how the City's final instructions on keying of locks has been fulfilled.

3. If requested by architect, submit samples of each type of exposed hardware unit in finish indicated and tagged with full description for coordination with schedule. Submit samples prior to submission of final hardware schedule.

   a. Samples will be returned to the supplier. Units that are acceptable and remain undamaged through submittal, review, and field comparison process may, after final check of operation, be incorporated in the Work, within limitations of keying coordination requirements.

4. Templates for doors, frames, and other work specified to be factory prepared for the installation of door hardware. Check shop drawings of other work to confirm that adequate provisions are made for locating and installing door hardware to comply with indicated requirements.

5. Florida Product Approval Data.

1.03 QUALITY ASSURANCE

A. Single Source Responsibility: Obtain each type of hardware (latch and lock sets, hinges, closers, etc.) from a single manufacturer. All door locks shall be keyed to a keying schedule developed by the City and manufacturer.

B. Supplier Qualifications: A recognized architectural door hardware supplier, with warehousing facilities in the Project's vicinity, that has a record of successful in-service performance for supplying door hardware similar in quantity, type, and quality to that indicated for this Project and that employs an experienced architectural hardware consultant (AHC) who is available to City, Architect, and Contractor, at reasonable times during the course of the Work, for consultation.

1. Require supplier to meet with City to finalize keying requirements and to obtain final instructions in writing.

2. Supplier shall be an authorized factory distributor of all specified products.

C. Fire-Rated Openings: Provide door hardware for fire-rated openings that complies with NFPA Standard No. 80 and requirements of authorities having jurisdiction. Provide only items of door hardware that are listed and are identical to products tested by UL, Warnock Hersey, FM, or other testing and inspecting organization acceptable to authorities having jurisdiction for use on types and sizes of doors indicated in compliance with requirements of fire-rated door and door frame labels.

1.04 PRODUCT HANDLING

A. Tag each item or package separately with identification related to final hardware schedule, and include basic installation instructions with each item or package.

B. Packaging of door hardware is responsibility of supplier. As material is received by hardware supplier from various manufacturers, sort and repackage in containers clearly marked with appropriate hardware set number to match set numbers of approved hardware schedule. Two or more identical sets may be packed in same container.

C. Inventory door hardware jointly with representatives of hardware supplier and hardware installer until each is satisfied that count is correct.

D. Deliver individually packaged door hardware items promptly to place of installation (shop or Project site).

E. Provide secure lock-up for door hardware delivered to the Project, but not yet installed. Control handling and installation of hardware items that are not immediately replaceable so that completion of the Work will not be delayed by hardware losses both before and after installation.

1.05 MAINTENANCE

A. Maintenance Tools and Instructions: Furnish a complete set of specialized tools and maintenance instructions as needed for City’s continued adjustment, maintenance, and removal and replacement of door hardware.

PART 2 – PRODUCTS

2.01 MANUFACTURERS

A. Manufacturers: Subject to compliance with requirements, provide products by one of the following:

1. Butts and Hinges:
   a. Hager Hinge Co.
   b. McKinney Products Co.
   c. Stanley Hardware, Div. Stanley Works.
2. Cylinders and Locks:
   a. Sargent Manufacturing Company.
   b. Schlage Lock, Div. Ingersoll-Rand Door Hardware Group.
3. Exit/Panic Devices:
   a. Sargent Manufacturing Company.
   b. Von Duprin, Div. Ingersoll-Rand Door Hardware Group.
4. Overhead Closers:
   a. LCN, Div. Ingersoll-Rand Door Hardware Group.
   b. Sargent Manufacturing Company.
5. Bolts:
   a. H.B. Ives, A Harrow Company.
   b. Quality Hardware Mfg. Co., Inc.
   c. Rockwood Mfg. Co.
6. Door Trim Units:
   a. H.B. Ives, A Harrow Company.
   b. Quality Hardware Mfg. Co., Inc.
   c. Rockwood Mfg. Co.
7. Kick, Mop, and Armor Plates:
   a. Rockwood Mfg. Co.
   b. H.B. Ives, A Harrow Company.

c. Quality Hardware Mfg Co., Inc.

8. Thresholds, Door Stripping and Seals, Automatic Drop Seals, Astragals:

a. National Guard Products, Inc.

b. Pemko Manufacturing Co., Inc.

c. Reese Enterprises, Inc.

2.02 SCHEDULED HARDWARE

A. Requirements for design, grade, function, finish, size, and other distinctive qualities of each type of finish hardware are indicated in the “Hardware Schedule” at the end of this Section. Products are identified by using hardware designation numbers of the following:

1. Manufacturer’s Product Designations: The product designation and name of one manufacturer are listed for each hardware type required for the purpose of establishing minimum requirements. Provide either the product designated or, where more than one manufacturer is specified under the Article “Manufacturers” in Part 2 for each hardware type, the comparable product of one of the other manufacturers that complies with requirements.

2. ANSI/BHMA designations used elsewhere in this Section or in schedules to describe hardware items or to define quality or function are derived from the following standards. Provide products complying with these standards and requirements specified elsewhere in this Section.

a. Butts and Hinges: ANSI/BHMA A156.1.

b. Bored and Preassembled Locks and Latches: ANSI/BHMA A156.2.

c. Exit Devices: ANSI/BHMA A156.3.

d. Door Controls - Closers: ANSI/BHMA A156.4.

e. Auxiliary Locks and Associated Products: ANSI/BHMA A156.5.

f. Architectural Door Trim: ANSI/BHMA A156.6.

g. Template Hinge Dimensions: ANSI/BHMA A156.7.

h. Door Controls - Overhead Holders: ANSI/BHMA A156.8.

i. Interconnected Locks and Latches: ANSI/BHMA A156.12.

j. Mortise Locks and Latches: ANSI/BHMA A156.13.

k. Sliding and Folding Door Hardware: ANSI/BHMA A156.14.

l. Closer Holder Release Devises: ANSI/BHMA A156.15.

m. Auxiliary Hardware: ANSI/BHMA A156.16.

n. Self-Closing Hinges and Pivots: ANSI/BHMA A156.17.

o. Materials and Finishes: ANSI/B BHMA A156.18.

2.03 MATERIALS AND FABRICATION

A. Manufacturer's Name Plate: Do not use manufacturers' products that have manufacturer's name or trade name displayed in a visible location (omit removable nameplates) except in conjunction with required fire-rated labels and as otherwise acceptable to Architect.

1. Manufacturer's identification will be permitted on rim of lock cylinders only.

B. Base Metals: Produce hardware units of basic metal and forming method indicated using manufacturer's standard metal alloy, composition, temper, and hardness, but in no case of lesser (commercially recognized) quality than specified for applicable hardware units for finish designations indicated.

C. Fasteners: Provide hardware manufactured to conform to published templates, generally prepared for machine screw installation. Do not provide hardware that has been prepared for self-tapping sheet metal screws, except as specifically indicated.

D. Furnish screws for installation with each hardware item. Provide Phillips flat-head screws except as otherwise indicated. Finish exposed (exposed under any condition) screws to match hardware finish or, if exposed in surfaces of other work, to match finish of this other work as closely as possible including "prepared for paint" surfaces to receive painted finish.

E. Provide concealed fasteners for hardware units that are exposed when door is closed except to the extent no standard units of type specified are available with concealed fasteners. Do not use thru-bolts for installation where bolt head or nut on opposite face is exposed in other work unless their use is the only means of reinforcing the work adequately to fasten the hardware securely. Where thru-bolts are used as a means of reinforcing the work, provide sleeves for each thru-bolt or use hex screw fasteners.

2.04 HINGES, BUTTS, AND PIVOTS

A. Templates: Except for hinges and pivots to be installed entirely (both leaves) into wood doors and frames, provide only template-produced units.

B. Screws: Provide Phillips flat-head screws complying with the following requirements:

1. For metal doors and frames install machine screws into drilled and tapped holes.

2. Finish screw heads to match surface of hinges or pivots.

C. Hinge Pins: Except as otherwise indicated, provide hinge pins as follows:

1. Out-Swing Exterior Doors: Nonremovable pins.

2. Interior Doors: Nonrising pins.

3. Tips: Flat button and matching plug, finished to match leaves, except where hospital tip (HT) is indicated.

D. Number of Hinges: Provide number of hinges indicated but not less than 3 hinges per door leaf for doors 90 inches or less in height and one additional hinge for each 30 inches of additional height.

2.05 LOCK CYLINDERS AND KEYING

A. Review the keying system with the City and provide the type required (master, grandmaster or great-grandmaster), either new or integrated with City's existing system.

B. Equip locks with manufacturer's special 6-pin tumbler cylinder with construction masterkey feature that permits voiding of construction keys without cylinder removal.

C. Metals: Construct lock cylinder parts from brass or bronze, stainless steel, or nickel silver.

D. Comply with City's instructions for masterkeying and, except as otherwise indicated, provide individual change key for each lock that is not designated to be keyed alike with a group of related locks.

E. Key Material: Provide keys of nickel silver only.

F. Key Quantity: Furnish 2 change keys for each lock, 5 master keys for each master system, and 5 grand masterkeys for each grandmaster system.

1. Deliver keys to City.

2.06 EXIT DEVICE

A. Strikes: Provide manufacturer's standard strike for each device, finished to match hardware set, unless otherwise indicated.

B. Lock Throw: Provide 3/4-inch minimum throw of latch on pairs of doors. Comply with UL requirements for throw of bolts and latch bolts on rated fire openings.

C. Flush Bolt Heads: Minimum of 1/2-inch-diameter rods of brass, bronze, or stainless steel with minimum 12-inch-long rod for doors up to 7'-0" in height. Provide longer rods as necessary for doors exceeding 7'-0" in height.

D. ANSI/BHMA: A156.3 Grade 1.

E. Exterior trim: Lever trim.

F. Provide accessories as required to meet Florida Product Approval for doors being supplied.

2.07 CLOSERS AND DOOR CONTROL DEVICES

A. All closers shall be constructed with rack and pinion with compression springs. The Closing speed, latching speed and backcheck shall be controlled by key operated valves. The delay action feature shall be a separate key operated valve. The closer body shall

be manufactured of high performance cast aluminum silicon alloy. All door closers shall be suitable for standard, top jamb, track, corner bracket and parallel arm applications when provided with proper brackets and arms. The closer should be adjustable to meet the range of sizes required for opening and closing forces.

B. Access-Free Manual Closers: Where manual closers are indicated for doors required to be accessible to the physically handicapped, provide adjustable units complying with ANSI A117.1 provisions for door opening force and delayed action closing.

2.08 DOOR TRIM UNITS

A. Fasteners: Provide manufacturer's standard exposed fasteners for door trim units consisting of either machine screws or self-tapping screws.

2.09 WEATHERSTRIPPING AND SEALS

A. General: Provide continuous weatherstripping on exterior doors and smoke, light, or sound seals on interior doors where indicated or scheduled. Provide noncorrosive fasteners for exterior applications and elsewhere as indicated.

2.10 THRESHOLDS

A. General: Except as otherwise indicated, provide standard metal threshold unit of type, size, and profile as shown or scheduled.

2.11 HARDWARE FINISHES

A. The designations used in schedules and elsewhere to indicate hardware finishes are the industry-recognized standard commercial finishes.

1. Stainless steel, US32D unless otherwise noted.

2. Closers shall have a USP finish unless otherwise noted.

PART 3 – EXECUTION

3.01 INSTALLATION

A. Mount hardware units at heights indicated in following applicable publications, except as specifically indicated or required to comply with governing regulations:

1. "Recommended Locations for Builders Hardware for Standard Steel Doors and Frames" by the Door and Hardware Institute.

B. Install each hardware item in compliance with the manufacturer's instructions and recommendations. Where cutting and fitting is required to install hardware onto or into surfaces that are later to be painted or finished in another way, coordinate removal, storage, and reinstallation or application of surface protection with finishing work specified in the Division 9 Sections. Do not install surface-mounted items until finishes have been completed on the substrates involved.

C. Set units level, plumb, and true to line and location. Adjust and reinforce the attachment substrate as necessary for proper installation and operation.

D. Drill and countersink units that are not factory prepared for anchorage fasteners. Space fasteners and anchors in accordance with industry standards.

E. Set thresholds for exterior doors in full bed of butyl-rubber or polyisobutylene mastic sealant.

F. Weatherstripping and Seals: Comply with manufacturer's instructions and recommendations to the extent installation requirements are not otherwise indicated.

3.02 ADJUSTING, CLEANING, AND DEMONSTRATING

A. Adjust and check each operating item of hardware and each door to ensure proper operation or function of every unit. Replace units that cannot be adjusted to operate freely and smoothly or as intended for the application made.

1. Where door hardware is installed more than one month prior to acceptance or occupancy of a space or area, return to the installation during the week prior to acceptance or occupancy and make final check and adjustment of all hardware items in such space or area. Clean operating items as necessary to restore proper function and finish of hardware and doors. Adjust door control devices to compensate for final operation of heating and ventilating equipment.

B. Clean adjacent surfaces soiled by hardware installation.

C. Instruct City's personnel in the proper adjustment and maintenance of door hardware and hardware finishes.

D. Six-Month Adjustment: Approximately six months after the date of Substantial Completion, the Installer, accompanied by representatives of the manufacturers of latchsets and locksets and of door control devices, and of other major hardware suppliers, shall return to the Project to perform the following work:

1. Examine and re-adjust each item of door hardware as necessary to restore function of doors and hardware to comply with specified requirements.

2. Consult with and instruct City's personnel in recommended additions to the maintenance procedures.

3.03 HARDWARE SCHEDULE

A. General: Provide hardware for each door to comply with requirements of this Section, hardware set numbers indicated in the door schedule on the Drawings, and in the following schedule of hardware sets.

<u>Hardware Set No. 1 – Single Leaf Exit Door</u>

3 EA[1]	Hinge	McKinney	T4A3386	4.5 x 4.5 NRP	32 D
1 EA	Exit Device	Sargent	HC8813ETJ		32 D

1 EA	Closer	Dorma	P640 STA TB		AL
1 EA	Threshold	Pemko	2005AS		AL
1 EA	Jamb Seal	Pemko	S88D		AL
1 EA	Lock	Sargent	8215 LNJ		32 D

[1]Use 4 Nos. for doors greater than 7'-0" high

Hardware Set No. 2 – Double Leaf Exit Door

6 EA[1]	Hinge	McKinney	T4A3386	4.5 x 4.5 NRP	32 D
1 EA	Exit Device	Sargent	HC8813 ETJ		32 D
2 EA	Stops	Rockwood	460		26 D
1 EA	Threshold	Pemko	2005 AS		AL
1 EA	Jamb Seal	Pemko	303 AS		AL
2 EA	Kickplate	Quality	48		SS
1 EA	Surface Bolts	Ives	360-12	Top and Bottom Inactive Leaf	F2C

[1]Use 8 Nos. for doors greater than 7'-0" high

- END OF SECTION -

DIVISION 9 – FINISHES

SECTION 09900

PAINTING

PART 1 – GENERAL

1.01 THE REQUIREMENT

A. The Contractor shall furnish all labor, tools, materials, supervision and equipment necessary to do all the work specified herein and as required for a complete installation, including surface preparation, priming and painting of Contractor furnished equipment, materials, and structures.

B. Section includes:

1. Paint Materials
2. Shop Painting
3. Field Painting
    a. Surface Preparation
    b. Piping and Equipment Identification
    c. Schedule of Colors
    d. Work in Confined Spaces
    e. OSHA Safety Colors

1.02 GENERAL INFORMATION AND DESCRIPTION

A. The term "paint," as used herein, includes emulsions, enamels, paints, stains, varnishes, sealers, cement filler, cement epoxy fillers and other coatings, whether used as prime, intermediate, or finish coats.

B. All paint for concrete and metal surfaces shall be especially adapted for use in and around water and wastewater treatment facilities and shall be applied in conformance with the manufacturer's published specifications.

C. All paint for final coats shall be fume resistant, compounded with pigments suitable for exposure to sewage gases, especially to hydrogen sulfide and to carbon dioxide. Pigments shall be materials which do not tend to darken, discolor, or fade due to the action of sewage gases. If a paint manufacturer proposes use of paint which is not designated "fume resistant" in its literature, it shall furnish full information concerning the pigments used in this paint.

D. Provide primers and intermediate coats produced by same manufacturer as finish coat. Use only thinners approved by paint manufacturer, and only within manufacturer’s recommended limits.

E. Coatings used in conjunction with potable water supply systems shall have U.S. Environmental Protection Agency (EPA) and FDA approval for use with potable water and shall not impart a taste or odor to the water.

F. All building, facilities, structures, and appurtenances, as indicated on the Drawings and as specified herein, shall be painted with not less then one shop coat and two field coats, or one prime coat and two finish coats of the appropriate paint. Items to be painted include, but are not limited to, exterior and interior concrete, structural steel, miscellaneous metals, steel and aluminum doors and frames, concrete block, ductwork, sluice gates, operators, pipe fittings, valves, mechanical equipment, motors, conduit, and all other work which is obviously required to be painted unless otherwise specified.

G. Baked on enamel finishes and items with standard shop finishes such as graphic panels, electrical equipment, toilet partitions, lockers, instrumentation, etc., shall not be field painted unless the finish is damaged during shipment or installation. Aluminum, stainless steel, fiberglass and bronze work shall not be painted unless color coding and marking is required or otherwise specified. A list of surfaces not to be coated is included in Article 1.09 of this Section.

H. Ensure compatibility of total paint system for each substrate. Test shop primed equipment delivered to the site for compatibility with final paint system. Provide an acceptable barrier coat or totally remove shop applied paint system when incompatible with system specified, and repaint with specified paint system.

I. The Contractor shall obtain all permits, licenses and inspections and shall comply with all laws, codes, ordinances, rules and regulations promulgated by authorities having jurisdiction which may bear on the work. This compliance will include Federal Public Law 91-596 more commonly known as the "Occupational Safety and Health Act of 1970".

1.03 REFERENCE SPECIFICATION, CODES AND STANDARDS

A. Without limiting the generality of these specifications the Work shall conform to the applicable requirements of the following documents:

1. SSPC - The Society for Protective Coatings Standards

a.	SSPC-Vis 1	Pictorial Surface Preparation Standards for Painting Steel Structures
b.	SSPC-SP2	Hand Tool Cleaning
c.	SSPC-SP3	Power Tool Cleaning
d.	SSPC-SP5	(NACE No. White Metal Blast Cleaning
e.	SSPC-SP6	(NACE No. Commercial Blast Cleaning
f.	SSPC-SP10	(NACE No. Near-White Metal Blast
g.	SSPC-SP13	(NACE No. 6) Surface Preparation of Concrete

2. NACE - National Association of Corrosion Engineers

3. ASTM D1737 - Test Method for Elongation of Attached Organic Coatings with Cylindrical Mandrel Apparatus

4. ASTM B117 - Method of Salt Spray (Fog) Testing

5. ASTM D4060 - Test Method for Abrasion Resistance of Organic Coating by the Taber Abraser

6. ASTM D3359 - Method for Measuring Adhesion by Tape Test

1.04 MANUFACTURERS

A. All painting materials shall be as manufactured by Tnemec, Carboline, Sherwin Williams, or equal.

1.05 SUBMITTALS

A. The Contractor shall submit paint manufacturer's data sheets, application instructions, and samples of each finish and color to the Engineer for review, before any work is started in accordance with Section 01300 entitled, "Submittals."

B. Submitted samples of each finish and color shall be prepared in a step-down format so that the area of each sample indicates the appearance of the various coats. For example, where a three-coat system is specified, the sample shall be divided into three areas indicating one coat only, two coats and all three coats. The Engineer will provide written authorization constituting a standard, as to color and finish only, for each coating system.

C. The Contractor shall prepare a complete schedule of surfaces to be coated and shall identify the surface preparation and paint system proposed for use. The Paint Schedule shall be in conformance with Article 3.03 of this Section. The schedule shall contain the name of the paint manufacturer, and the name, address and telephone number of the manufacturer's representative that will inspect the Work. The schedule shall be submitted to the Engineer for review as soon as possible following the Notice to Proceed so that the schedule may be used to identify colors and to specify shop painting systems on order for fabricated equipment.

D. Name and detailed qualifications of the protective coating applicator or subcontractor. Qualifications shall include, but not be limited to, five (5) project references which show that the painting applicator or subcontractor has previous successful experience with the specified or comparable coating systems, a list of installations that are currently in service and documentation that applicator or subcontractor is currently a qualified applicator of the proposed coatings by the manufacturer. Include the name, address and telephone number of the owner of each installation for which the coating applicator provided the coating.

1.06 SERVICES OF MANUFACTURER'S REPRESENTATIVE

A. The Contractor shall purchase paint from an acceptable manufacturer. The manufacturer shall assign a representative to inspect the application of his product both in the shop and field. The Contractor, through the manufacturer's representative, shall submit his report to the Engineer at the completion of his Work identifying the products used and verifying

that said products were properly applied and that the paint systems were proper for the exposure and service.

B. Services shall also include, but not be limited to, inspecting prior coatings of paint, determination of best means of surface preparation, inspection of complete work, and re-inspection of painted work to be performed six months after the job is completed.

1.07 MANUFACTURER'S INSTRUCTIONS

A. The manufacturer's published instructions for use as a guide in specifying and applying the manufacturers proposed paint shall be submitted to the Engineer. Paint shall not be delivered to the job before acceptance of the manufacturer's instructions is given by the Engineer.

B. A manufacturer's paint will not be considered for use unless that manufacturer's published instructions meets the following requirements:

1. The instructions must have been written and published by the manufacturer for the purpose and with the intent of giving complete instruction for the use and application of the proposed paint in the locality and for the conditions for which the paint is specified or shown to be applied under this Contract.

2. All limitations, precautions, and requirements that may adversely affect the paint; that may cause unsatisfactory results after the painting application; or that may cause the paint not to serve the purpose for which it was intended; that is, to protect the covered material from corrosion, shall be clearly and completely stated in the instructions. These limitations and requirements shall, if they exist, include, but not be limited to the following:

a. Methods of application

b. Number of coats

c. Thickness of each coat

d. Total thickness

e. Drying time of each coat, including primer

f. Primer required to be used

g. Primers not permitted

h. Use of a primer

i. Thinner and use of thinner

j. Temperature and relative humidity limitations during application and after application

k. Time allowed between coats

l. Protection from sun

m. Physical properties of paint including solids content and ingredient analysis

n. Surface preparation

o. Touch up requirements and limitations

C. Concrete surfaces specified by the paint manufacturer to be acid etched shall be etched in accordance with the manufacturer's instructions. The surface shall then be thoroughly scrubbed with clean water, rinsed, and allowed to dry. The surface shall be tested with a moisture meter to determine when dry before coating. The surface shall also be tested for pH to determine the acid has been properly neutralized.

1.08 QUALITY ASSURANCE

A. The Contractor shall give the Engineer a minimum of three days advance notice of the start of any field surface preparation work of coating application work.

B. All such Work shall be performed only in the presence of the Engineer, unless the Engineer has specifically allowed the performance of such Work in his absence.

C. Review by the Engineer, or the waiver of review of any particular portion of the Work, shall not relieve the Contractor of his responsibility to perform the Work in accordance with these Specifications.

D. The Contractor shall provide references of the coating applicator or subcontractor per article 1.05, D.

1.09 SAFETY AND HEALTH REQUIREMENTS

A. In accordance with requirements of OSHA Safety and Health Standards for Construction (29CFR1926) and the applicable requirements of regulatory agencies having jurisdiction, as well as manufacturer's printed instructions, appropriate technical bulletins, manuals, and material safety data sheets, the Contractor shall provide and require use of personnel protective and safety equipment for persons working in or about the project site.

B. Respirators shall be worn by persons engaged or assisting in spray painting. The Contractor shall provide ventilating equipment and all necessary safety equipment for the protection of the workmen and the work.

C. All paint shall comply with all requirements of the Air Pollution Regulatory Acts concerning the application and formulation of paints and coatings for an area in which the paints are applied. Specifically, paints shall be reformulated as required to meet the local, State and Federal requirements.

1.10 SURFACES NOT TO BE COATED

A. The following items shall not be coated unless otherwise noted:

1. Encased piping or conduit.

2. Stainless steel work.

3. Galvanized checkered plate.
4. Aluminum handrails, walkways, windows, louvers, grating and checkered plate.
5. Flexible couplings, lubricated bearing surfaces and insulation.
6. Packing glands and other adjustable parts of mechanical equipment.
7. Finish hardware.
8. Steel encased in concrete or masonry
9. Plastic switch plates and receptacle plates.
10. Signs and nameplates.
11. Any code-required labels, such as Underwriters' Laboratories and Factory Mutual, or any equipment identification, performance rating, name or nomenclature plates.
12. Any moving parts of operating units, mechanical and electrical parts, such as valve and damper operators, linkages, sensing devices, motor and fan shafts, unless otherwise indicated.

1.11 QUALITY WORKMANSHIP

A. The Contractor shall be responsible for the cleanliness of his painting operations and shall use covers and masking tape to protect work whenever such covering is necessary, or if so requested by the City. Any unwanted paint shall be carefully removed without damage to any finished paint or surface. If damage occurs, the entire surface, adjacent to and including the damaged area, shall be repainted without visible lapmarks and without additional cost to the City.

B. Painting found defective shall be scraped or sandblasted off and repainted as the City may direct. Before final acceptance of the work, damaged surfaces of paint shall be cleaned and repainted as directed by the City.

1.12 ADDITIONAL PAINT

A. At the end of the project, the Contractor shall turn over to the City a one gallon can (single component material) or small kit (multi component material – minimum of one gallon yield) of each type and color of paint, primer, thinner or other coating used in the field painting. The material shall be delivered in unopened, labeled cans as it comes from the factory. The manufacturer's literature describing the materials and giving directions for their use shall be furnished in three bound copies. A type-written inventory list shall be furnished at the time of delivery.

1.13 SHIPPING, HANDLING AND STORAGE

A. All painting materials shall be brought to the job site in the original sealed labeled containers of the paint manufacturer and shall be subject to review by the Engineer. Where thinning is necessary, only the product of the manufacturer furnishing the paint shall be used. All such thinning shall be done strictly in accordance with the manufacturer's instructions, and with the full knowledge of the Engineer.

B. Materials and their storage shall be in full compliance with the requirements of pertinent codes and fire regulations. Receptacles shall be placed outside buildings for paint gates and containers. Paint waste shall not be disposed of in plumbing fixtures, process drains or other plant systems or process units.

PART 2 – PRODUCTS

2.01 MATERIALS

A. Table 09900-1 depicts the coatings referenced in Article 3.03 of this Section entitled, "Paint Schedule".

TABLE 09900-1
PRODUCT LISTING

Ref. No.	Description	Manufacturer's Reference		
		Tnemec	Carboline	Sherwin-Williams
101	Waterborne Polyamine Epoxy	151-1051 ElastoGrip FC	Sanitile 120	Loxon Conditioner
102	Water Based Block Filler	1254 Epoxoblock WB	Sanitile 100	Corobond 300
103	Modified Polyamidoamine Epoxy	135 – Color	Carboguard 890 – Color	Macropoxy 646
104	Polyamidoamine Epoxy Primer	N69 – 1211	Carboguard 890 – 0500	Macropoxy 646
105	Polyamidoamine Epoxy	N69 – Color	Carboguard 890 – Color	Macropoxy 646
107	Waterborne Acrylic Epoxy	113-Color	Sanitile 255 – Color	Hi-Bild WB Catalyzed Epoxy
110	Aliphatic Acrylic Polyurethane	1095 – Color	Carbothane 133HB – Color	Acrolon Ultra
111	Modified Waterborne Acrylate	156 - Envirocrete (Smooth Texture)	Flexxide Elastomer	Loxon XP
114	Acrylic Concrete Primer	6 Tneme-Cryl	Sanitile 120	Loxon Conditioner
115	Aromatic Urethane / Epoxy Zinc Rich	90-97 Tneme-Zinc	Carbozinc 859	Corothane I Galvapac
116	Water repellent	668 Chemprobe Deck A Pell 40	Carbocrete Sealer WB	H&C SL-40
118	Epoxy Modified Cementitious Mortar	218 MortarClad	Carboguard 510 SG	Corobond 300
119	Cycloaliphatic Amine Epoxy	104 H.S. Epoxy	Carboguard 893 (Non-immersion) Phenoline 385 (Immersion)	Tank Clad HS

Ref. No.	Description	Manufacturer's Reference		
		Tnemec	Carboline	Sherwin-Williams
131	Modified Polyamine Epoxy Primer	201 Epoxoprime	Carboguard 1340	Corobond 100
132	Fiber Reinforced Polyamine Epoxy	270 Stranlok	Sanitile 755	Cor-Cote HCR Clear with 1 oz. glass mat
133	Polyamine Novolac Epoxy	282 Tneme-Glaze	Sanitile 949	Cor-Cote HCR FF
137	Silicate Blend	629 CT Densifyer	Carbocrete Sealer WB	H&C Clear Liquid Hardener & Densifyer
138	Aromatic Urethane / Novolac Epoxy Primer	1 Omnithane	Phenoline 311	Corothane I Galvapak 1K
139	Modified Polyamine Epoxy / Phenalkamine Epoxy	435 Perma-Glaze	Carboguard 690	Cor-Cote SC Coating

PART 3 – EXECUTION

3.01 SURFACE PREPARATION

A. General

1. Surfaces to be painted shall be clean and dry, and free of dust, rust, scale and all foreign matter. No solvent cleaning, power or hand tool cleaning shall be permitted unless acceptable to the Engineer or specified herein.

2. Threaded portions of valve and gate stems, machined surfaces which are limited for sliding contact, surfaces which are to be assembled against gaskets, surfaces or shafting on which sprockets are to fit, or which are intended to fit into bearings, machined surfaces of bronze trim on slide gates and similar surfaces shall be masked off to protect them from the sandblasting of adjacent surfaces. Cadmium-plated or galvanized items shall not be sandblasted unless hereinafter specified, except that cadmium-plated, zinc-plated, or sherardized fasteners used in assembly of equipment to the sandblasted shall be sandblasted in the same manner as the unprotected metal. All installed equipment, mechanical drives, and adjacent painted equipment shall be protected from sandblasting. Protection shall prevent any sand or dust from entering the mechanical drive units or equipment where damage could be caused.

3. Hardware accessories, machined surfaces, plates, lighting fixtures, and similar items in place prior to cleaning and painting, and not intended to be painted, shall be protected or removed during painting operations and repositioned upon completion of painting operations.

4. Examine surfaces to be coated to determine that surfaces are suitable for specified surface preparation and painting. Report to Engineer surfaces found to be unsuitable

in writing. Do not start surface preparation until unsuitable surfaces have been corrected. Starting surface preparation precludes subsequent claim that such surfaces were unsuitable for the specified surface preparation or painting.

5. Surface preparation shall be in accordance with specifications and manufacturer's recommendations. Provide additional surface preparation, and fill coats where manufacturer recommends additional surface preparation, in addition to requirements of specification.

6. Touch-up shop or field applied coatings damaged by surface preparation or any other activity, with the same shop or field applied coating; even to the extent of applying an entire coat when required to correct damage prior to application of the next coating. Touch up coats are in addition to the specified applied systems, and not considered a field coat.

7. Protect motors and other equipment during blasting operation to ensure blasting material is not blown into motors or other equipment. Inspect motors and other equipment after blasting operations and certify that no damage occurred, or where damage occurred, the proper remedial action was taken

8. Sand from sandblasting shall be thoroughly removed, using a vacuum cleaner if necessary. No surface which has been sandblasted shall be painted until inspected by the Engineer.

B. Metal Surfaces

1. Except as otherwise provided, all preparation of metal surfaces shall be in accordance with Specifications SP-1 through SP-10 of the Society for Protective Coatings (SSPC). Where the Society for Protective Coatings Specifications are referred to in these Contract Documents, the corresponding Pictorial Surfaces Preparation Standard shall be used to define the minimum final surface conditions to be supplied. Grease and oil shall be removed and the surface prepared by hand tool cleaning, power tool cleaning or blast cleaning in accordance with the appropriate Specification SP-1 through SP-30.

2. Perform blast cleaning operations for metal when following conditions exist:

   a. Moisture is not present on the surface.

   b. Relative humidity is below 80%.

   c. Ambient and surface temperatures are 5°F or greater than the dew point temperature.

   d. Painting or drying of paint is not being performed in the area.

   e. Equipment is in good operating condition.

   f. Proper ventilation, illumination, and other safety procedures and equipment are being provided and followed.

3. Weld flux, weld spatter and excessive rust scale shall be removed by power tool cleaning as per SSPC-SP-3.

4. All ferrous metal surfaces not required to be galvanized shall be cleaned of all oil grease, dirt, rust and tight and loose mill scale by blasting in accordance with the following: SSPC SP 5 White Metal Blast Cleaning and comply with the visual standard NACE No. 1, for shop prepared and shop primed metal to be submerged or in a corrosive environment, SSPC-SP10 Near White Metal Blast Cleaning, and comply with the visual standard NACE No. 2 for field prepared metal to be submerged or in a corrosive environment, SSPC-SP6 and comply with the visual standard NACE No. 3 for metal in all other locations. Pickling, complying with SSPC SP 8, may be substituted for Near White Blast in areas as determined by the Engineer. Priming shall follow sandblasting before any evidence of corrosion occurs, before nightfall and before any moisture is on the surface.

5. Field surface preparation of small, isolated areas such as field welds, repair of scratches, abrasions or other marks to the shop prime or finish shall be cleaned by power tools in accordance with SSPC SP 3, or in difficult and otherwise inaccessible areas by hand cleaning in accordance with SSPC SP 2 and spot primed.

6. All coated surfaces shall be cleaned prior to application of successive coats. All non-ferrous metals not to be coated shall be cleaned. This cleaning shall be done in accordance with SSPC SP 1, Solvent Cleaning.

7. All shop coated surfaces shall be protected from damage and corrosion before and after installation by treating damaged areas immediately upon detection. Abraded or corroded spots on shop coated surfaces shall be prepared in accordance with SSPC SP 2, Hand Tool Cleaning and then touched up with the same materials as the shop coat.

8. All shop coated surfaces which are faded, discolored, or which require more than minor touch up, in the opinion of the Engineer, shall be repainted. Cut edges of galvanized sheets, electrical conduit, and metal pipe sleeves, not to be finish painted, shall be cleaned in accordance with SSPC SP 1, Solvent Cleaning and primed with zinc dust zinc oxide metal primer.

C. Concrete Surfaces

1. Concrete surfaces are to be cured for at least 28 days prior to surface preparation, unless coatings are recommended for application over green concrete surfaces.

2. Test concrete for moisture content, pH and salts using test method recommended by the paint manufacturer. Do not begin surface preparation, or painting until moisture content is acceptable to manufacturer.

3. Non-submerged concrete and masonry surfaces to be painted shall be prepared by removing efflorescence, chalk, dust, dirt, grease, oil, form coating, tar and by roughening to remove glaze. All surfaces shall be repaired prior to commencement of the coating operation.

4. Concrete immersion surfaces that are to be coated shall be prepared in accordance to SSPC-SP13/NACE No. 6 to remove all laitance, curing compounds, hardeners, sealers, and other contaminants, and to provide a minimum surface profile. Refer to manufacturer's recommendation for specific coating being applied and adhere to ICRI Concrete Surface Preparation Profiles (CSP 1-10) when reviewing concrete surface

preparation. Areas of concrete which contain bug holes or voids shall be filled with the manufacturer's approved filler material.

D. Masonry

1. Cure for a minimum of 28 days prior to surface preparation or paint application.

2. Clean masonry surfaces free from all dust, dirt, oil, grease, loose mortar, chalky deposits, efflorescence, and other foreign materials.

3. Test masonry for moisture content. Use test method recommended by paint manufacturer. Do not begin painting until moisture content is acceptable to manufacturer.

E. Wood

1. Clean wood surfaces free of all foreign matter, with cracks and nail holes and other defects properly filled and smoothed. Remove sap and resin by scraping and wipe clean with rags dampened with mineral spirits.

2. Saturate end grain, cut wood, knots, and pitch pockets with an appropriate sealer before priming.

3. Prime and backprime wood trim before setting in place.

4. After prime coat has dried, fill nailholes, cracks, open joints, and other small holes with approved spackling putty. Lightly sand wood trim prior to applying second coat of paint.

F. Exposed Pipe, Valves and Pumps

1. Bituminous coated pipe shall not be used in exposed locations. Pipe which shall be exposed after project completion shall be primed in accordance with the requirements herein. Any bituminous coated ferrous pipe which is inadvertently installed in exposed locations shall be sandblasted to SSPC SP 5 White Metal before priming and painting.

2. After installation and prior to finish painting, all exterior, exposed flanged joints shall have the gap between adjoining flanges and gaps between the pipe wall and threaded-on flanges sealed with a single component Thiokol caulking to prevent rust stains.

G. Gypsum Drywall

1. Sand joint compound with sandpaper to provide a smooth flat surface. Avoid sanding of adjacent drywall paper.

2. Remove dust, dirt, and other contaminants.

H. PVC Pipe Surfaces

1. All pipe surfaces shall be cleaned and lightly sanded before painting.

I. Existing Painted Surfaces

1. Totally remove existing paint when: surface is to be submerged in a severe environment, paint is less than 75% intact, brittle, eroded or has underfilm rusting.

2. Surfaces which are greater than 75% intact require removal of failed paints and then spot primed. Spot priming is in addition to coats specified.

3. Remove surface contamination such as oil, grease, loose paint, mill scale, dirt, foreign matter, rust, mold, mildew, mortar, efflorescence, and sealers.

4. Clean and dull glossy surfaces prior to painting in accordance with the manufacturer's recommendations.

5. Check existing paints for compatibility with new paint system. If incompatible, totally remove existing paint system or apply a barrier coat recommended by the paint manufacturer. Remove existing paints of undetermined origin. Prepare a test patch of approximately 3 square feet over existing paint. Allow test patch to dry thoroughly and test for adhesion. If proper adhesion is not achieved remove existing paint and repaint.

3.02 SHOP PAINTING

A. All fabricated steel work and equipment shall receive at the factory at least one shop coat of prime paint compatible with the paint system required by these Specifications. The Contractor shall coordinate all shop priming to ensure compatibility with paint system specified. Surface preparation prior to shop painting shall be as specified herein. Finish coats may be applied in the shop if acceptable to the Engineer. All shop painted items shall be properly packaged and stored until they are incorporated in the Work. Any painted surfaces that are damaged during handling, transporting, storage or installation shall be cleaned, scraped, and patched before field painting begins so that Work shall be equal to the original painting received at the shop. Equipment or steel Work that is to be assembled on the site shall likewise receive a minimum of one shop coat of paint at the factory. Surfaces of exposed members that will be inaccessible after erection shall be prepared and painted before erection.

B. The Contractor shall specify the shop paints to be applied when ordering equipment in order to assure compatibility of shop paints with field paints. The paints and surface preparation used for shop coating shall be identified on shop drawings submitted to the Engineer for review. Shop paint shop drawings will not be reviewed until the final project paint system has been submitted by the Contractor and reviewed by the Engineer.

C. Shop finish coats may be the standard finish as ordinarily applied by the manufacturer if it can be demonstrated to the Engineer that the paint system is equal to and compatible with the paint system specified. However, all pumps, motors and other equipment shall receive at least one field applied finish coat after installation.

3.03 PAINT SCHEDULE

A. The Contractor shall adhere to this paint schedule, providing those paints named or equal. DFT shall mean the minimum dry film thickness per application measured in mils. Products are referenced by numbers listed in table 09900-1 in Article 2.01 of this Section

entitled "Product Listing." The paint schedule identifies the minimum DFT required per coat. If the Contractor does not achieve the specified DFT range in a single coat, he shall provide additional coats as necessary at no additional cost to the City.

B. Metal Surfaces, Atmospheric (Exterior) Exposure

1. Metal surfaces exposed to the atmosphere that do not come into contact with corrosive atmosphere including the following types of surfaces shall be painted as described below:

   a. Pumps, motors, process equipment, machinery, etc.

   b. Above ground piping, valves and pipe supports.

   c. Miscellaneous steel shapes, angles, etc.

   d. Exposed surfaces of conduit, ductwork, etc.

   e. Exposed non-factory painted surfaces of electric panels, air conditioning units, etc.

Ferrous Metal

Application	No.	Description	DFT
First -1 coat	104	Polyamidoamine Epoxy Primer	3.0 - 5.0
Second - 1 coat (*)	105	Polyamidoamine Epoxy	2.0 - 3.0
Finish - 1 coat	110	Aliphatic Acrylic Urethane	3.0 - 4.0
		Min. Total	10.0 Mils

(*) Broadcast 50 mesh silica sand while still wet over entire digester cover area.

Non-Ferrous Metal

Application	No.	Description	DFT
First - 1 coat	105	Polyamidoamine Epoxy	2.0 - 3.0
Second - 1 coat	110	Aliphatic Acrylic Urethane	3.0 - 4.0
		Min. Total	6.0 Mils

Galvanized

Application	No.	Description	DFT
Spot Repair	115	Aromatic Urethane / Epoxy Zinc-Rich (spot)	2.5 - 3.5
First - 1 coat	105	Polyamidoamine Epoxy	2.0 - 3.0
Second - 1 coat	110	Aliphatic Acrylic Urethane	3.0 - 4.0
		Min. Total	6.0 Mils

C. Metal Surfaces, Submerged Exposure

1. Metal surfaces that are submerged shall be painted as described below:

Application	No.	Description	DFT
Stripe coat	119	Cycloaliphatic Amine Epoxy	3.0 – 5.0
First – 1 coat	119	Cycloaliphatic Amine Epoxy	4.0 – 6.0
Finish - 1 coat	119	Cycloaliphatic Amine Epoxy	4.0 – 6.0
		Min. Total (excluding stripe coat)	10.0 Mils

D. Metal Surfaces, Interior Exposure

1. Interior metal surfaces (nonsubmerged) that do not come in contact with corrosive atmosphere including the following types of surfaces shall be painted as follows:

   a. Pumps, motors, process equipment, machinery, etc.

   b. Piping, valves and supports.

   c. Miscellaneous steel shapes, angles, rails, etc.

   d. Exposed surfaces of conduit, ductwork, etc.

Application	No.	Description	DFT
First - 1 coat	104	Polyamidoamine Epoxy Primer	3.0 - 5.0
Finish - 1 coat	105	Polyamidoamine Epoxy	4.0 - 6.0
		Min. Total	9.0 Mils

E. Ductile Iron Pipe, Exterior or Interior Exposure

1. Ductile iron pipe exterior or interior exposure shall receive the following types of paint:

Application	No.	Description	DFT
First - 1 coat	105	Polyamidoamine Epoxy	6.0 - 10.0
Finish - 1 coat	110	Aliphatic Acrylic Polyurethane	3.0 - 5.0
		Min. Total	12.0 Mils

F. PVC Pipes, Exterior or Interior Exposure

1. PVC pipes, valves, and accessories, shall receive the following types of paint:

Application	No.	Description	DFT
First - 1 coat	105	Polyamidoamine Epoxy	2.0 - 3.0
Finish - 1 coat	110	Aliphatic Acrylic Polyurethane	3.0 - 4.0
		Min. Total	6.0 Mils

G. New Concrete, Masonry and Stucco, Exterior Exposure

1. The exterior above grade concrete, masonry, and stucco surfaces of all new structures shall receive the following:

Surface preparation: Surface shall be clean and dry without efflorescence, chalk, dust, dirt, grease, oil, form coating, and tar. Allow concrete to cure for 28 days.

Application	No.	Description	DFT
Block Filler (*)	102	Water Based Epoxy Block Filler	100-150 SF/Gal
Primer (**)	114	Acrylic Concrete Primer	300-400 SF/Gal
First - 1 coat	111	Modified Waterborne Acrylate	4.0 - 6.0
Finish - 1 coat	111	Modified Waterborne Acrylate	4.0 - 6.0
		Min. Total	10.0 Mils

(*) Block filler only to be used on new CMU
(**) Concrete primer for non-CMU applications

H. New Concrete and Masonry Surfaces, Interior Exposure

1. Interior exposed masonry and concrete wall and ceiling surfaces, including beam and column surfaces of all new non-water retaining structures shall be painted as follows:

Surface preparation: Surface shall be clean and dry without efflorescence, chalk, dust, dirt, grease, oil, form coating, and tar. Allow concrete to cure for 28 days.

Application	No.	Description	DFT
Block Filler (*)	102	Water Based Epoxy Block Filler	100-150 SF/Gal
Primer (**)	114	Acrylic Concrete Primer	300-400 SF/Gal
First - 1 coat	105	Polyamidoamine Epoxy	4.0 - 6.0
Finish - 1 coat	105	Polyamidoamine Epoxy	4.0 - 6.0
		Min. Total	10.0 Mils

**Block Filler shall only be used on new masonry.*

*** Concrete primer for non-CMU applications*

I. Existing or New Concrete Surfaces, Submerged Exposure:

1. Existing or new concrete surfaces submerged in stormwater, including but not limited to the following types of surfaces, shall be painted as described below:

   a. Interior of wet wells

   b. Interior of intake structures

   c. Interior of effluent boxes

Application	No.	Description	DFT
First - 1 coat	117	Epoxy, coal tar, thinned	6.0 - 8.0
Finish - 1 coat	117	Epoxy, coal tar, (Hi-Build)	14.0 – 20.0
		Min. Total	20.0 Mils

J. Concrete Surfaces, Buried Exposure:

1. The exterior surfaces of cast-in-place concrete walls and precast concrete structures from the top of the footing up to six inches below finished grade shall be painted as follows:

Application	No.	Description	DFT
First - 1 coat	117	Epoxy, coal tar, thinned	6.0 - 8.0
Finish - 1 coat	117	Epoxy, coal tar, thinned	14.0 – 20.0
		Min. Total	20.0 Mils

K. Concrete Floor Surfaces of Electrical Rooms

1. Concrete floor surfaces of electrical rooms shall be painted as follows:

Application	No.	Description	DFT
First - 1 Coat	137	Silicate Blend	300 SF/Gal
Finish - 1 coat	137	Silicate Blend	350 SFT/Gal

3.04 PAINTING

A. Application: All paint shall be applied by experienced painters with brushes or other applicators acceptable to the Engineer.

1. Paint shall be applied without runs, sags, thin spots, or unacceptable marks. Paints shall be applied at the rate specified by the manufacturer to achieve the minimum dry mil thickness required. Additional coats of paint shall be applied, if necessary, to obtain thickness specified.

2. Paint shall be applied with spraying equipment only on those surfaces approved by the Engineer. If the material has thickened or must be diluted for application by spray gun, each coat shall be built up to the same film thickness achieved with undiluted brushed on material. Where thinning is necessary, only the products of the particular

manufacturer furnishing the paint shall be used; and all such thinning shall be done in strict accordance with the manufacturer's instructions, as well as with the full knowledge of the Engineer.

3. Surfaces not accessible to brushes or rollers may be painted by spray by dauber or sheepskins and paint mitt. If any of these methods is to be used, it shall be done in strict accordance with the manufacturer's instructions, as well as with the full knowledge of the Engineer.

B. Drying Time:A minimum of twenty four hours drying time shall elapse between applications of any two coats of paint on a particular surface unless shorter time periods are a requirement of the manufacturer or specified herein. Longer drying times shall be required for abnormal conditions as defined by the manufacturer.

C. Weather Restrictions:No painting whatsoever shall be accomplished in rainy or excessively damp weather when the relative humidity exceeds 85 percent, or when the general air temperature cannot be maintained at 50 degrees Fahrenheit or above throughout the entire drying period. No paint shall be applied when it is expected that the relative humidity will exceed 85 percent or that the air temperature will drop below 50 degrees Fahrenheit within 18 hours after the application of the paint.

1. Dew or moisture condensation should be anticipated; and if such conditions are prevalent, painting shall be delayed until midmorning to be certain the surfaces are dry. The day's painting shall be completed well in advance of the probable time of day when condensation will occur.

D. Inspection of Surfaces

1. Surface preparation and every field coat of priming and finishing paint shall be inspected by the Engineer or his authorized representative before the succeeding coat is applied. The Contractor shall follow a system of tinting successive paint coats so that no two coats for a given surface are exactly the same color. Areas to receive black protective coatings shall in such cases be tick marked with white or actually gauged as to thickness when finished.

2. Before application of the prime coat and each succeeding coat, any defects or deficiencies in the prime coat or succeeding coat shall be corrected by the Contractor before application of any subsequent coating.

3. Samples of surface preparation and of painting systems shall be furnished by the Contractor to be used as a standard throughout the job, unless omitted by the Engineer.

4. When any appreciable time has elapsed between coatings, previously coated areas shall be carefully inspected by the Engineer, and where, in his opinion, surfaces are damaged or contaminated, they shall be cleaned and recoated at the Contractor's expense. Recoating times of manufacturer's printed instructions shall be adhered to.

5. Coating thickness shall be verified by the use of a dry film thickness digital gauge. Gauge shall be Elcometer 456 or equal and shall be properly calibrated. Coating thickness on non-metal surfaces shall be verified by the use of an ultrasonic gauge. Ultrasonic gauge shall be Positector 200 or equal. Gauges shall include the entire

range of coating thicknesses required in this section.

6. The Contractor shall provide free of charge to the Engineer two new digital dry film gauges and two wet film gauges to be used to inspect coating by Engineer and Contractor. One gauge may be used by Contractor and returned each day to the Engineer. Engineer will return gauges to Contractor at completion of job.

7. Coatings shall pass a holiday detector test.

8. Determination of Film Thickness: Randomly selected areas, each of at least 107.5 contiguous square feet, totaling at least 5% of the entire control area shall be tested. Within this area, at least 5 squares, each of 7.75 square inches, shall be randomly selected. Three readings shall be taken in each square, from which the mean film thickness shall be calculated. No more than 20 percent of the mean film thickness measurements shall be below the specified thickness. No single measurement shall be below 80 percent of the specified film thickness. Total dry film thickness greater than twice the specified film thickness shall not be acceptable. Areas where the measured dry film thickness exceeds twice that specified shall be completely redone unless otherwise approved by the Engineer. When measured dry film thickness is less than that specified additional coats shall be applied as required.

9. Holiday Testing: Holiday test painted ferrous metal surfaces which will be submerged in water or other liquids, or surfaces which are enclosed in a vapor space in such structures. Mark areas which contain holidays. Repair or repaint in accordance with paint manufacturer's printed instructions and retest.

   a. Dry Film Thickness Exceeding 20 Mils: For surfaces having a total dry film thickness exceeding 20 mils: Pulse-type holiday detector such as Tinker & Rasor Model AP-W, D.E. Stearns Co. Model 14/20, shall be used. The unit shall be adjusted to operate at the voltage required to cause a spark jump across an air gap equal to twice the specified coating thickness.

   b. Dry Film Thickness of 20 Mils or Less: For surfaces having a total dry film thickness of 20 mils or less: Tinker & Rasor Model M1 non-destructive type holiday detector, K-D Bird Dog, shall be used. The unit shall operate at less than 75-volts. For thicknesses between 10 and 20 mils, a non-sudsing type wetting agent, such as Kodak Photo-Flow, shall be added to the water prior to wetting the detector sponge.

E. Special Areas

1. All surfaces which are to be installed against concrete, masonry etc., and will not be accessible for field priming and/or painting shall be back primed and painted as specified herein, before erection. Anchor bolts shall be painted before the erection of equipment and then the accessible surfaces repainted when the equipment is painted.

F. Special attention shall be given to insure that edges, corners, crevices, welds and rivets receive a film thickness equivalent to that of the adjacent painted surfaces.

G. Safety

1. Respirators shall be worn by persons engaged or assisting in spray painting. The Contractor shall provide ventilating equipment and all necessary safety equipment for the protection of the workmen and the Work.

H. Quality Workmanship

1. The Contractor shall be responsible for the cleanliness of his painting operations and shall use covers and masking tape to protect the Work whenever such covering is necessary, or if so requested by the City. Any unwanted paint shall be carefully removed without damage to any finished paint or surface. If damage does occur, the entire surface, adjacent to and including the damaged area, shall be repainted without visible lap marks and without additional cost to the City.

I. Painting found defective shall be scraped or sandblasted off and repainted as the Engineer may direct. Before final acceptance of the Work, damaged surfaces of paint shall be cleaned and repainted as directed by the Engineer.

J. Any pipe scheduled to be painted and having received a coating of a tar or asphalt compound shall be painted with two coats or "Intertol Tar Stop", "Tnemec Tar Bar" or equal before successive coats are applied in accordance with the paint schedule.

3.05 SCHEDULE OF COLORS

A. All colors shall be as designated by the Engineer at the shop drawing review. The Contractor shall submit color samples including custom color choices as required to the Engineer as specified in Article 1.05 of this Section. The Contractor shall submit suitable samples of all colors and finishes for the surfaces to be painted, or on portable surfaces when required by the Engineer. The Engineer shall decide upon the choice of colors and other finishes when alternates exist. No variation shall be made in colors without the acceptance from the City. Color names and/or numbers shall be identified according to the appropriate color chart issued by the manufacturer of the particular product in question.

B. All above ground water main piping shall be painted white with blue longitudinal striping.

C. All underground water main piping shall have continuous 4” blue longitudinal stripe.

D. All above ground force main piping shall be painted green.

3.06 COLOR CODING AND LETTERING OF PIPING

A. Pipe color coding and lettering are specified in the Section entitled “Piping and Equipment Identification Systems.”

3.07 OSHA SAFETY COLORS

A. Items listed in ANSI Z53.1-1971, Section 2.1 shall be painted ANSI Red. In general, these items shall include fire protection equipment and apparatus; wall mounted breathing apparatus, danger signs and locations; and stop bars, buttons or switches. In addition all

hose valves and riser pipes, fire protection piping and sprinkler systems, and electrical stop switches shall be painted ANSI Red.

B. Items listed in ANSI Z53.1-1971, Section 2.3 shall be painted ANSI Yellow. Yellow shall be the basic color for designating caution and for marking physical hazards such as striking against, stumbling, falling, tripping, and "caught in between". In addition, an 8-inch wide strip on the top and bottom tread of stairways shall be coated.

3.08 WORK IN CONFINED SPACES

A. The Contractor shall provide and maintain safe working conditions for all employees. Fresh air shall be supplied continuously to confined spaces through the combined use of existing openings, forced draft fans, or by direct air supply to individual workers. Paint fumes shall be exhausted to the outside from the lowest level in the contained space.

B. Electrical fan motors shall be explosion proof if in contact with fumes. No smoking or open fires will be permitted in, or near, confined spaces where painting is being done.

3.09 CLEANING

A. The buildings and all other Work area shall be at all times kept free from accumulation of waste material and rubbish caused by the Work. At the completion of the painting, all tools, equipment, scaffolding, surplus materials, and all rubbish around the inside the buildings shall be removed and the Work left broom clean unless otherwise specified.

- END OF SECTION -

DIVISION 10 – SPECIALTIES

SECTION 10400

IDENTIFYING DEVICES

PART 1 – GENERAL

1.01 THE REQUIREMENT

A. The CONTRACTOR shall furnish and install all labor, materials, equipment and appliances required for the complete execution of the Work as specified herein.

B. Principal items of work include:

1. Aluminum outdoor signs

2. Self-adhesive safety labels

1.02 SUBMITTALS

A. In accordance with the procedures and requirements set forth in Section entitled "Submittals," submit the following:

1. Color and finish samples for all nameplates, and signs.

2. Shop drawings shall include, but not be limited to:

a. Complete details for all signs giving sizes and styles of lettering and colors.

b. Complete schedules for signs giving location, message, letter, size, color, and method of attachment.

c. Details of fabrication and attachment of all items.

1.03 DELIVERY, STORAGE AND HANDLING

A. Deliver all materials in unopened, unbroken and undamaged original packaging bearing the manufacturer's label and identification for installation.

B. Handle all materials with care to prevent defacement of any nature.

1.04 ACCEPTABLE MANUFACTURERS

A. Subject to compliance with the Specifications, provide aluminum sign products from one of the following manufacturers or equal:

1. Andco Industries Corporation

2. Interface Architectural Signage Incorporated

3. Environmental Sign Systems

4. Lab Safety Supply

PART 2 – PRODUCTS

2.01 ALUMINUM SIGNS

A. Signs shall be fabricated from aluminum and suitable for outdoor use.

B. All safety signs shall comply with the most recent versions of ANSI Z535.2 – *Environmental and Facility Safety Signs* and 29 CFR 1910.145 – *Specification for Accident Prevention Signs and Tags*.

2.02 ACCESSORIES

A. Mounting Hardware: Stainless steel fasteners, aluminum hardware.

2.03 AMERICANS WITH DISABILITIES ACT COMPLIANCE

A. All exterior room name signs, interior room name signs, storage signs, temporary signs, emergency escape signs, capacity signs, exit route signs, and toilet room handicapped signs shall comply with the American With Disabilities Act, including but not limited to the character proportion, height, finish, contrast, mounting height and location, symbols Braille, pictograms and raised characters.

2.04 EMERGENCY ESCAPE SIGN

A. CONTRACTOR shall provide and install signs 1½ inches high minimum or as required by the American With Disabilities Act x length as required reading "EMERGENCY ESCAPE". Locate next to all door openings to the stairways. Exact locations shall be located on site as directed by the ENGINEER.

B. Material shall be 1/8 inch clear matte acrylic stock with sub-surface printed red ground and while Helvetica Medium copy. Sign shall have 3/8 inch radius corners.

C. Mounting shall be with non-removable head screws using shields where mounted on masonry or concrete surfaces. Mount adjacent to doors.

2.05 EXIT ROUTE SIGNS

A. CONTRACTOR shall provide and install exit route signs consisting of 10 inch x 12 inch minimum or as required by the Americans With Disabilities Act. Use Black anodic architectural aluminum channel frame with metal clips reinforced mitered corners.

B. The frame shall have a clear matte Plexiglas face and 1/8 inch tempered hardboard back with four tamperproof screws fastened through hardboard back to wall. Allow for the installation of hard card message between face and back.

C. Install adjacent to all exit doors as directed on the site by the ENGINEER.

2.06 FIRE EXTINGUISHER SIGNS

A. CONTRACTOR shall provide and install signs on exterior side of rooms having fire extinguishers in the room. Sign shall have white raised letters chemically fused to 1/8 inch red acrylic plastic background. Signs shall be 1-1/2 inches high x length required reading "FIRE EXTINGUISHER INSIDE". Doors with these signs shall remain unlocked at all times the facility is occupied including nighttime uses.

B. CONTRACTOR shall provide and install fire extinguisher signs wall mounted above all fire extinguishers, no less than 1 foot away in distance. The signs shall be two-sided, red and white, acrylic clad ABS 18 inches high x 4 inches wide.

2.07 SIGN SCHEDULE

A. In addition to the signs previously specified, the CONTRACTOR shall provide and install signs according to the sign schedule summarized in Table 10400-1. The CONTRACTOR shall provide the signs and labels as listed by Lab Safety Supply product number, or equal. CONTRACTOR shall prepare submittals of all custom signs for ENGINEER's review.

B. CONTRACTOR shall provide additional signage in addition to signage indicated on Schedule as required to meet all regulatory and building department requirements.

Sign Wording or *Type of Sign*	**Minimum Size (inches) H x W**	**Type**	**Quantity**	**Locations**
DANGER CONFINED SPACE ENTER BY PERMIT ONLY (Spanish and English Language)	14 x 10	Aluminum Sign	1	Top of wet well
STORMWATER PUMP STATION	14 x 10	Aluminum Sign	2	Exterior Door
DANGER HIGH VOLTAGE (Spanish and English Language	14 x 10	Aluminum Sign	2	Interior wall, Electrical Rooms
DANGER THIS EQUIPMENT STARTS AUTOMATICALLY (Spanish and English Language)	14 x 10	Aluminum Sign	1	Interior wall, Generator Room
CAUTION HEARING PROTECTION REQUIRED (Spanish and English Language)	14 x 10	Aluminum Sign	1	Interior wall, Generator Room
EXIT	As Required by Code		2	Interior side of all Exterior Doors

PART 3 – EXECUTION

3.01 INSTALLATION

A. All materials specified herein shall be installed in compliance with the approved manufacturer's printed specifications. Mounting devices, bolts, screws, nuts and the like shall be of high strength aluminum or stainless steel. The final location of each sign shall be as determined by the ENGINEER. Installation shall comply with the applicable handicap accessibility requirements and heights.

3.02 ADJUSTMENT AND CLEANING

A. After completion of project, remove all protective devices, touch up as necessary and clean all exposed surfaces with a mild solution of detergent and warm water. Leave all surfaces in a neat and clean condition.

- END OF SECTION -

SECTION 10522

FIRE EXTINGUISHERS

PART 1 – GENERAL

1.01 THE REQUIREMENT

A. Furnish and install fire extinguishers where shown on the Drawings and/or as specified herein.

1.02 REFERENCE SPECIFICATIONS, CODES, AND STANDARDS

A. Without limiting the generality of these Specifications, the Work shall conform to the applicable requirements of the following documents:

1. NFPA 10 - Portable Fire Extinguishers

1.03 SUBMITTALS

A. In accordance with the procedures and requirements set forth in Section 01300, Submittals, submit the following:

1. Complete detail and installation drawings for Fire Extinguisher Cabinets.

2. Manufacturer's data sheets and verification of U.L. ratings.

PART 2 – PRODUCTS

2.01 ACCEPTABLE MANUFACTURERS

A. Subject to compliance with the Specifications provide products from one of the following manufacturers:

1. Kidde Fire Extinguisher Company

2. Ansul Fire Protection

3. Potter - Roemer

4. J. L. Industries

2.02 MATERIALS

A. Dry Chemical (DC) Fire Extinguishers

1. Provide where indicated on Drawings or as specified herein, 10 lb. capacity, hand portable, with heavy duty steel wall mount, tri-class dry chemical type, with Underwriters' Laboratories rating of 4-A: 60 BC.

2. Provide DC Fire Extinguisher for Electrical Building. Location to be determined in field by City and Engineer.

B. Carbon Dioxide (CO_2) Fire Extinguishers

1. Provide where indicated on Drawings, 10 lb. capacity, portable carbon dioxide type with heavy duty steel wall mounts, having Underwriters' Laboratories rating of 10-BC.

PART 3 – EXECUTION

3.01 INSTALLATION

A. Fire extinguishers shall be installed where directed by the Engineer.

B. Wall mounts for extinguishers shall be securely mounted to masonry with lag bolts and shields.

C. Fire extinguishers shall be installed so that the top of the fire extinguisher is not more than 5 feet above the floor.

- END OF SECTION -

DIVISION 11 – EQUIPMENT

SECTION 11000

EQUIPMENT GENERAL PROVISIONS

PART 1 – GENERAL

1.01 THE REQUIREMENT

A. The Contractor shall furnish, install, test, and place in acceptable operation all mechanical equipment and all necessary accessories as specified herein, as shown on the Drawings, and as required for a complete and operable system.

B. The mechanical equipment shall be provided complete with all accessories, special tools, spare parts, mountings, and other appurtenances as specified, and as may be required for a complete and operating installation.

C. It is the intent of these Specifications that the Contractor shall provide the City complete and operational equipment/systems. To this end, it is the responsibility of the Contractor to coordinate all interfaces with related mechanical, structural, electrical, instrumentation and control work and to provide necessary ancillary items such as controls, wiring, etc., to make each piece of equipment operational as intended by the Specifications.

D. The complete installation shall be free from excessive vibration, cavitation, noise, and oil or water leaks.

E. The requirements of this section shall apply to equipment furnished under Divisions 11, 13, 14, and 15.

1.02 REFERENCE SPECIFICATIONS, CODES, AND STANDARDS

A. All equipment, materials, and installations shall conform to the requirements of the most recent editions with latest revisions, supplements, and amendments of the specifications, codes, and standards listed in the Section entitled “Reference Standards.”

1.03 PERFORMANCE AFFIDAVITS

A. When required in the individual equipment Specifications, the Contractor shall submit manufacturer's Performance Affidavits for equipment to be furnished.

B. By these affidavits, each manufacturer must certify to the Contractor and the City, jointly, that each manufacturer has examined the Contract Documents and that the equipment, apparatus, or process the manufacturer offers to furnish will meet in every way the performance requirements set forth or implied in the Contract Documents.

C. The Contractor must transmit to the Engineer three (3) original copies of the affidavit given by the manufacturer or supplier along with the initial Shop Drawing submittals.

D. The Performance Affidavit must be signed by an officer of the Basic Corporation, partnership, or company manufacturing the equipment and witnessed by a notary public.

E. The Performance Affidavit shall have the following format:

Addressed to: (Contractor) and City of Fort Lauderdale

Reference: Stormwater Master Plan Modeling and Design Implementation

Project Name

Text: (Manufacturer's Name) has examined the Contract Documents and hereby state that the (Product) meets in every way the performance requirements set forth or implied in Section_____ of the Contract Documents.

Signature: Corporate Officers shall be Vice President, or higher. (Unless statement authorizing signature is attached.)

1.04 SHOP DRAWINGS

A. Shop Drawings shall be submitted to the Engineer for all equipment in accordance with the Section entitled “Submittals” and shall also include the following information:

1. Performance characteristics and descriptive data.

2. Detailed equipment dimensional drawings and setting plans.

3. General lifting, erection, installation, and adjustment instructions, and recommendations.

4. Complete information regarding location, type, size, and length of all field welds in accordance with "Standard Welding Symbols" AWS A2.0 of the American Welding Society. Special conditions shall be fully explained by notes and details.

5. The total uncrated weight of the equipment plus the approximate weight of shipped materials. Support locations and loads that will be transmitted to bases and foundations. Exact size, placement, and embedment requirements of all anchor bolts.

6. Details on materials of construction of all components including applicable ASTM designations.

7. Information on bearing types and bearing life.

8. Gear box design and performance criteria and AGMA service factor.

9. Piping schematics.

10. Motor data sheet indicating motor horsepower; enclosure type; voltage; insulation class; temperature rise and results of dielectric tests; service-rating; rotational speed; motor speed-torque relationship; efficiency and power factor at 1/2, 3/4 and full load; slip at full load; running, full load, and locked rotor current values; and safe running time-current curves. Refer to Specification D.

11. Equipment and motor protective device details. Connection diagrams for motor and all protective devices.

12. Equipment shop coating systems, interior and exterior.

13. Panel layout drawings, schematic wiring diagrams, and component product data sheets for control panels. Refer to Division 16 and Division 17.

14. A list of spare parts and special tools to be provided.

15. Any additional information required to show conformance with the equipment specifications.

16. Warranty documentation including statement of duration of warranty period and contact phone numbers and addresses for warranty issues.

B. SHOP DRAWINGS ON ITEMS REQUIRING PERFORMANCE AFFIDAVITS WILL NOT BE REVIEWED UNTIL ACCEPTABLE PERFORMANCE AFFIDAVITS ARE RECEIVED.

1.05 OPERATION AND MAINTENANCE INSTRUCTION/MANUALS

A. Operation and Maintenance (O&M) manuals shall be submitted in accordance with the Section entitled “Submittals.”

1.06 GENERAL INFORMATION AND DESCRIPTION

A. All parts of the equipment furnished shall, be designed and constructed for the maximum stresses occurring during fabrication, transportation, installation, testing, and all conditions of operation. All materials shall be new, and both quality and materials shall be entirely suitable for the service to which the units are to be subjected and shall conform to all applicable sections of these Specifications.

B. All parts of duplicate equipment shall be interchangeable without modification. Manufacturer's design shall accommodate all the requirements of these Specifications.

C. Equipment and appurtenances shall be designed in conformity with ASTM, ASME, AIEE, NEMA, and other generally accepted applicable standards.

D. All bearings and moving parts shall be adequately protected by bushings or other approved means against wear, and provision shall be made for accessible lubrication by extending lubrication lines and fittings to approximately 30 inches above finished floor elevation.

E. Details shall be designed for appearance as well as utility. Protruding members, joints, corners, gear covers, etc., shall be finished in appearance. All exposed welds on machinery shall be ground smooth and the corners of structural shapes shall be rounded or chamfered.

F. Machinery parts shall conform within allowable tolerances to the dimensions shown on the working drawings.

G. All machinery and equipment shall be safeguarded in accordance with the safety codes of the USA and the State in which the project is located.

H. All rotating shafts, couplings, or other moving pieces of equipment shall be provided with suitable protective guards of sheet metal or wire mesh, neatly and rigidly supported. Guards shall be removable as required to provide access for repairs.

I. All equipment greater than 100 pounds shall have lifting lugs, eyebolts, etc., for ease of lifting, without damage or undue stress exerted on its components.

J. All manufactured items provided under this Section shall be new, of current manufacture, and shall be the products of reputable manufacturers specializing in the manufacture of such products.

1.07 EQUIPMENT WARRANTIES

A. Warranty requirements may be added to or modified in the individual equipment specifications.

B. The equipment furnished under this Contract shall be guaranteed to be free from defects in quality, design and/or materials for a period of one (1) year unless otherwise specified in the individual equipment specifications. The period of such warranties shall start on the date the particular equipment is placed in use by the City with corresponding start-up certification provided by the manufacturer's technical representative as specified herein, provided that the equipment demonstrates satisfactory performance during the thirty day operational period after the equipment startup. If the equipment does not perform satisfactorily during the thirty-day operational period, the start of the warranty period will be delayed until the equipment demonstrates proper operation. The Equipment Supplier shall repair or replace without charge to the City any part of equipment which is defective or showing undue wear within the guarantee period, or replace the equipment with new equipment if the mechanical performance is unsatisfactory; furnishing all parts, materials, labor, etc., necessary to return the equipment to its specified performance level. Repairs made during the warranty period shall include any required re-balancing.

C. The Contractor shall provide an equipment warranty logbook prepared specifically for this project and submit two (2) copies of the document to the Engineer prior to final payment. The equipment warranty logbook shall include a summary listing of all equipment warranties provided, date received, and start date and end date of warranty period. A copy of each equipment warranty and equipment start-up certification shall also be provided in the document.

D. The Equipment Supplier shall guarantee to the City that all equipment offered under these specifications, or that any process resulting from the use of such equipment in the manner stated is not the subject of patent litigation, and that the equipment supplier has not knowingly offered equipment, the installation or use of which is likely to result in a patent controversy, in which the City as user is likely to be made the defendant.

E. Where patent infringements are likely to occur, each Equipment Supplier shall submit, as a part of their bid, license arrangements between the Equipment Supplier, or the manufacturer of the equipment offered, and the patent City or the controller of the patent,

which will permit the use in the specified manner of such mechanical equipment as the equipment supplier may be bidding.

F. Each Equipment Supplier, by submitting their bid, agrees to hold and save the City and Engineer or its officers, agents, servants, and employees harmless from liability of any nature or kind, including cost and expenses for, or on account of, any patented or unpatented invention, process, article, or appliance manufactured or used in the performance of the work under this contract, including the use of the same by the City.

PART 2 – PRODUCTS

2.01 ACCEPTABLE MANUFACTURERS

A. The materials covered by these Specifications are intended to be equipment of proven reliability, and as manufactured by reputable manufacturers having experience in the production of such equipment. The Contractor shall, upon request of the Engineer, furnish the names of not less than five successful installations of the manufacturer's equipment of the same size and model of that offered under this contract. The equipment furnished shall be designed, constructed, and installed in accordance with the industry accepted practices and shall operate satisfactorily when installed as shown on the Drawings and operated per manufacturer's recommendations.

2.02 ANCHORS AND SUPPORTS

A. The Contractor shall furnish, install, and protect all necessary guides, bearing plates, anchor and attachment bolts, and all other appurtenances required for the installation of the devices included in the equipment specified. Working Drawings for installation shall be furnished by the equipment manufacturer, and suitable templates shall be used by the Contractor when required in the detailed equipment Specifications.

B. Anchor bolts and fasteners shall be furnished in accordance with the Section entitled “Metal Fastening,” and with the individual equipment Specifications. All anchor bolts shall be a minimum of 1/2-inch diameter. All anchor bolts, handrail bolts, washers, clips, clamps, and fasteners of any type shall be constructed of 316 stainless steel, unless otherwise specified in the individual equipment Specifications.

C. The Contractor shall provide all concrete pads or pedestals required for equipment furnished. All concrete equipment pads shall be a minimum of 6 inches high, unless otherwise shown on the Drawings and shall be doweled.

D. Pipe sleeves or other means of adjusting anchor bolts shall be provided where indicated or required. Equipment shall be leveled by first using sitting nuts on the anchor bolts, and then filling the space between the equipment base and concrete pedestal with non-shrink grout, unless alternate methods are recommended by the manufacturer and are acceptable to the Engineer (such as shim leveling pumps, or chemical grout). Non-shrink grout shall be as specified in the Section entitled “Grout.”

2.03 STRUCTURAL STEEL

A. Structural steel used for fabricating equipment shall conform to the requirements of Division 5, Metals.

B. All materials shall conform to applicable provisions of the AISC Specifications for the design and fabrication of structural steel, and to pertinent ASTM Standard Specifications.

2.04 DISSIMILAR METALS

A. All dissimilar metals shall be properly isolated to the satisfaction of the Engineer.

2.05 GALVANIZING

A. Where required by the equipment specifications, galvanizing shall be performed in accordance with Division 5, Metals.

2.06 STANDARDIZATION OF GREASE FITTINGS

A. The grease fittings on all mechanical equipment shall be such that they can be serviced with a single type of grease gun. Fittings shall be “ZERK” type or dimensionally equal.

2.07 ELECTRICAL REQUIREMENTS

A. All electrical equipment and appurtenances, including but not limited to motors, panels, conduit and wiring, etc., specified in the equipment specifications shall comply with the applicable requirements of the Division 16 specifications and the latest National Electric Code.

B. Motors shall conform to the applicable requirements of Division 16.

C. In the individual equipment specifications, specified motor horsepower is intended to be the minimum size motor to be provided. If a larger motor is required to meet the specified operating conditions and performance requirements, the Contractor shall furnish the larger sized motor and shall upgrade the electrical service (conduit, wires, starters, etc.) at no additional cost to the City.

D. Where variable frequency drives (VFDs) are specified, the Contractor shall be responsible for coordinating between equipment supplier and VFD supplier to ensure a complete and operational system. VFDs shall be furnished under Division 16.

E. Motor starters and controls shall be furnished and installed under Division 16 and Division 17 unless otherwise specified in the individual pump specifications.

2.08 ACCESSORIES, SPARE PARTS, AND SPECIAL TOOLS

A. Spare parts for equipment shall be furnished where indicated in the equipment Specifications or where recommended by the equipment manufacturer.

B. Spare parts shall be identical and interchangeable with original parts.

C. The spare parts shall be packed in containers suitable for long term storage, bearing labels clearly designating the contents and the pieces of equipment for which they are intended.

D. Painting requirements for spare parts shall be identical to those for original, installed parts. Where no painting or protective coating is specified, suitable provisions shall be made to protect against corrosion.

E. Spare parts shall be delivered at the same time as the equipment to which they pertain. Spare parts shall be stored separately in a locked area, maintained by the Contractor, and shall be turned over to the City in a group prior to substantial completion. All of these materials shall be properly packed, labeled, and stored where directed by the City and Engineer.

F. The Contractor shall furnish all special tools necessary to operate, disassemble, service, repair, and adjust the equipment in accordance with the manufacturers operation and maintenance manual.

G. The Contractor shall furnish a one year supply of all recommended lubricating oils and greases. The manufacturer shall submit a list of at least four manufacturer's standard lubricants which may be used interchangeably for each type of lubricant required. All of these materials shall be properly packed, labeled and stored where directed by the Engineer.

2.09 EQUIPMENT IDENTIFICATION

A. All mechanical equipment shall be provided with a substantial stainless steel nameplate, mechanically fastened with stainless steel hardware in a conspicuous place, and clearly inscribed with the manufacturer's name, year of manufacture, serial number, and principal rating data.

B. All equipment provided under Divisions 11 through 15 including motorized and manual gates and valves (aboveground and buried) shall also be identified as to the equipment name and equipment tag number by a suitable laminated plastic or stainless steel nameplate mechanically fastened with stainless steel hardware. Equipment names and equipment tag numbers shall match the names provided for the equipment as identified on the Drawings and in the Specifications, subject to Engineer review and acceptance. Equipment names and tag numbers not currently identified in the Drawings and Specifications shall be provided to the Contractor prior to the fabrication of the nameplates. Coordinate name and number with same on remotely located controls, control panel, and other related equipment. For buried valve applications, the valve name and number shall be included in the bronze disc embedded in the valve’s concrete collar as identified on the Drawings.

C. Nameplates shall not be painted over.

PART 3 – EXECUTION

3.01 SHOP TESTING

A. All equipment shall be tested in the shop of the manufacturer in a manner which shall conclusively prove that its characteristics comply fully with the requirements of the Contract Documents and that it will operate in the manner specified or implied.

B. No equipment shall be shipped to the project until the Engineer has been furnished a certified copy of test results and has notified the Contractor, in writing, that the results of such tests are acceptable.

C. Five (5) certified copies of the manufacturer's actual test data and interpreted results thereof shall be forwarded to the Engineer for review.

D. If required by the individual equipment Specifications, arrangements shall be made for the City/Engineer to witness performance tests in the manufacturer's shop. The Engineer shall be notified a minimum of 10 working days before shop testing commences.

E. Shop testing of electric motors shall be in accordance with applicable requirements of Division 16.

3.02 STORAGE OF EQUIPMENT AND MATERIALS

A. The Contractor shall store their equipment and materials at the job site in strict accordance with the manufacturer's recommendations and as directed by the City or Engineer, and in conformity to applicable statutes, ordinances, regulations, and rulings of the public authority having jurisdiction. Equipment and materials shall not be delivered to the site prior to 90 days in advance of the scheduled installation. Partial payment requests will not be processed for materials delivered prior to 90 days before installation or for materials that are not properly stored unless otherwise approved.

B. Material or equipment stored on the job site is stored at the Contractor's risk. Any damage sustained of whatever nature shall be repaired to the Engineer's satisfaction at no expense to the City. Stored electrical equipment is to be protected from the elements and shall have space heaters energized.

C. The Contractor shall not store unnecessary materials or equipment on the job site and shall take care to prevent any structure from being loaded with a weight which will endanger its security or the safety of persons.

D. The Contractor shall observe all regulatory signs for loadings on structures, fire safety, and smoking areas.

E. The Contractor shall not store materials or encroach upon private property without the written consent of the owner of such private property.

3.03 MANUFACTURER’S FIELD SERVICES

A. The Contractor shall arrange for a qualified Technical Representative from each manufacturer or supplier of equipment who is regularly involved in the inspection, installation, start-up, troubleshooting, testing, maintenance, and operation of the specified equipment. Qualification of the Technical Representative shall be appropriate to the type of equipment furnished and subject to the approval of the Engineer and the City. Where equipment furnished has significant process complexity, furnish the services of engineering personnel knowledgeable in the process involved and the function of the equipment. When necessary, the Contractor shall schedule multiple Technical Representatives to be present at the same time for the purpose of coordinating the operation of multiple pieces of related equipment.

B. For each site visit, the Technical Representative shall submit jointly to the City, the Engineer, and the Contractor a complete signed report of the results of their inspection, operation, adjustments, and testing. The report shall include detailed descriptions of the points inspected, tests and adjustments made, quantitative results obtained if such are specified.

C. The manufacturer's Technical Representative shall provide the following services.

1. Installation: The Technical Representative shall inspect the installed equipment to verify that installation is in accordance with the manufacturer’s requirements. Where required by individual equipment specifications, the Technical Representative shall also supervise the installation of the equipment.

2. Testing: After installation of the equipment has been completed and the equipment is presumably ready for operation, but before it is operated by others, the Technical Representative shall inspect, operate, test, and adjust the equipment as required to prove that the equipment is in proper condition for satisfactory operation under the conditions specified. Unless otherwise noted in the signed site visit report, the report shall constitute a certification that the equipment conforms to the requirements of the Contract and is ready for startup and that nothing in the installation will render the manufacturer's warranty null and void. The report shall include date of final acceptance field test, as well as a listing of all persons present during tests.

3. Startup: The Technical Representative shall start up the equipment for actual service with the help of the Contractor. In the event that equipment or installation problems are experienced, the Contractor and the representative shall provide the necessary services until the equipment is operating satisfactorily and performing according to the specifications at no additional cost to the City. Unless otherwise noted in the signed site visit report, the report shall constitute a certification that the equipment conforms to the requirements of the Contract and is ready for permanent operation and that nothing in the installation will render the manufacturer's warranty null and void.

4. Training: The Technical Representative shall instruct the City’s operating personnel in correct operation and maintenance procedures. The instruction shall demonstrate start-up, operation, control, adjustment, trouble-shooting, servicing, maintenance, and shutdown of each item of equipment. Such instruction shall be scheduled at a time arranged with the City at least 2 weeks in advance of the training and shall be provided while the respective Technical Representative's equipment is fully operational. The Contractor shall have submitted, and had accepted, the O&M Manuals prior to commencement of training. Training shall be provided to four separate shifts of the City’s personnel between the hours of 6:00 A.M. and 6:00 P.M. as necessary. The Contractor shall provide professional video recordings of all training sessions. Completed, labeled recordings shall be provided to the City for each type of training session.

5. Services after Startup: Where required by the individual equipment specifications, the Technical Representative shall return to the project site thirty (30) days after the start-up date to review the equipment performance, correct any equipment problems, and conduct operation and maintenance classes as required by the City.

This follow-up trip is required in addition to the specified services of Technical Representative prior to and during equipment startup. At this time, if there are no equipment problems, each manufacturer shall certify to the City in writing that their equipment is fully operational and capable of meeting operating requirements. If the equipment is operating incorrectly, the Technical Representative will make no certification to the City until the problems are corrected and the equipment demonstrates a successful thirty (30) days operating period.

D. Services of the Technical Representative will require a minimum of two (2) site visits, one for installation and testing and one for startup and training, and will be for the minimum number of days recommended by the manufacturer and approved by the Engineer but will not be less than the number of days specified in individual equipment sections.

E. The Contract amount shall include the cost of furnishing the Technical Representative for the minimum number of days specified, and any additional time required to achieve successful installation and operation. The times specified for services by the Technical Representative in the equipment Specifications are exclusive of travel time to and from the facility and shall not be construed as to relieve the manufacturer of any additional visits to provide sufficient service to place the equipment in satisfactory operation.

F. The Contractor shall notify the Engineer at least 14 days in advance of each equipment test or City training session.

G. The Technical Representative shall sign in and out at the office of the Engineer's Resident Project Representative on each day the Technical Representative is at the project.

3.04 INSTALLATION

A. The Contractor shall obtain written installation manuals from the equipment manufacturer prior to installation. Equipment shall be installed strictly in accordance with recommendations of the manufacturer. A copy of all installation instructions shall be furnished the Engineer's field representative one week prior to installation.

B. The Contractor shall have on hand sufficient personnel, proper construction equipment, and machinery of ample capacity to facilitate the work and to handle all emergencies normally encountered in work of this character. To minimize field erection problems, mechanical units shall be factory-assembled insofar as practical.

C. Equipment shall be erected in a neat and professional quality manner on the foundations at the locations and elevations shown on the Drawings.

D. All equipment sections and loose items shall be match-marked prior to shipping.

E. For equipment such as pumping units, which require field alignment and connections, the Contractor shall provide the services of the manufacturer's qualified mechanic, millwright, or machinist, to align the pump and motor prior to making piping connections or anchoring the pump base. Alignment shall be as specified herein.

F. The Contractor shall furnish oil and grease for initial operation and testing. The manufacturer and grades of oil and grease shall be in accordance with the recommendations of the equipment manufacturer.

3.05 ALIGNMENT

A. Set equipment to dimensions shown on drawings. Dimensions shall be accurate to +/- 1/16 inch unless otherwise noted on the drawings. Wedges shall not be used for leveling, aligning, or supporting equipment.

B. General Equipment Leveling: Non-rotating equipment shall be set level to +/- 1/16 inch per 10-foot length (.005 inch per foot) unless otherwise noted on the drawings. Shims shall be used unless equipment is furnished with leveling feet. Set shims flush with equipment baseplate edges. When grouting is required, equipment shall be shimmed to allow a minimum of one-inch grout thickness. Grout shall cover shims at least 3 inches. Final level check shall be held for inspection and approval by Engineer before proceeding.

C. Grouting

1. Fill anchor bolt holes or sleeves with grout, after bolt alignment is proven, and prior to placing grout under equipment bases.

2. Surface Preparation. Roughen surface by chipping, removing laitance, and unsound concrete. Clean area of all foreign material such as oil, grease, and scale. Saturate area with water at least 4 hours prior to grouting, removing excess water ponds.

3. Application. Place grout after the equipment base has been set and its alignment and level have been approved. Form around the base, mix grout, and place in accordance with the grout manufacturers published instructions. Eliminate all air or water pockets beneath the base using a drag chain or rope.

4. Finishing. Point the edges of the grout to form a smooth 45-degree slope.

5. After grout has cured (not before 3 days after placement) paint exposed surfaces of grout with shellac.

6. Level Verification. After grout has cured, and immediately prior to drive alignment, recheck equipment for level and plumb. Re-level and square as necessary. Hold final checks for inspection and approval by Engineer.

D. Inspect for and remove all machining burrs or thread pulls in female holes on mating surfaces of mounting frame and machine feet.

E. Inspect and clean equipment mounting base pads, feet, and frames to remove all grease, rust, paint and dirt.

F. Assembled equipment shafts shall be set level to .0015 inches per foot of shaft length (+/- .0005 inches) up to a maximum of 0.015 inches for any length shaft unless the manufacturer's requirements are more stringent or unless otherwise noted in the equipment specifications. Use the machined surfaces on which the equipment sets for the base/mounting frame leveling plane. Use the machined shaft surface for equipment leveling plane.

G. Sprocket and Sheave Alignment. Check shaft mounted components for face runout and eccentricity (outside diameter) runout by magnetically mounting a dial indicator on a stationary base and indicating over 360 degrees on a continuous machined surface at the outside diameter of the component. Maximum allowable total indicated face runout and eccentricity for sprockets and sheaves will be per ANSI Standard B29.1-1975.

H. Belt tensioning. Set drive belt tension to manufacturer's specification for the belt type. Recheck alignment after drive tensioning.

I. Thermal/Mechanical Growth. Thermal/mechanical growth corrections for driver and driven machines will be used in vertical and horizontal alignment where applicable. The equipment manufacturer will determine thermal/mechanical growth applicability for any machine and provide the correction offsets to be used.

J. Rotating Shaft Alignment

1. Fixtures will be set up on the driver and driven machine, machines shaft surfaces. Machined coupling hubs may be used only if there is no clearance to mount fixtures directly on the shafts.

2. Primary alignment method for direct drive machines is when coupled. Uncoupled alignment will be used only when approved by the Engineer.

3. Account for possible coupling flex by always rotating coupled machines in the same direction during alignment.

4. Uncoupled machines must be connected so that both shafts turn together without relative motion during alignment.

5. Indicator bar sag will be measured and included for each reverse indicator alignment setup.

6. Reverse Dial Indicator. The final maximum allowable misalignment: vertical and horizontal from the desired targets of .000 inches (for a non-thermal growth machine) or from the given target readings (for a thermal growth machine) must meet BOTH of the following conditions simultaneously: 1/2 the final total indicator reading at each indicator will be no more than shown in the table below AND the final remaining correction at each machine foot be no more than .001 inches of required movement.

Machine Speed (RPM)	**Total Misalignment* (inches)**
Up to 1800	.002
1800 and greater	.001

**1/2 indicator reading*

3.06 FIELD TESTING

A. All equipment shall be set, aligned and assembled in conformance with the manufacturer's drawings and instructions. Provide all necessary calibrated instruments to execute performance tests. Submit report certified by the pump manufacturer's representative.

B. Preliminary Field Tests, Yellow Tag

1. As soon as conditions permit, after the equipment has been secured in its permanent position, the Contractor shall:

   a. Verify that the equipment is free from defects.

   b. Check for alignment as specified herein.

   c. Check for direction of rotation.

   d. Check motor for no load current draw.

2. The Contractor shall flush all bearings, gear housings, etc., in accordance with the manufacturer's recommendations, to remove any foreign matter accumulated during shipment, storage or erection. Lubricants shall be added as required by the manufacturer's instructions.

3. When the Contractor has demonstrated to the Engineer that the equipment is ready for operation, a yellow tag will be issued. The tag will be signed by the Engineer, or the Engineer's assigned representative and attached to the equipment. The tag shall not be removed.

4. Preliminary field tests, yellow tag, must be completed before equipment is subjected to final field tests, blue tag.

C. Final Field Tests, Blue Tag

1. Upon completion of the above, and at a time approved by the Engineer, the equipment will be tested by operating it as a unit with all related piping, ducting, electrical and controls, and other ancillary facilities.

2. The equipment will be placed in continuous operation as prescribed or required and witnessed by the Engineer or the Engineer's assigned representative and the City or the City's assigned representative.

3. The tests shall prove that the equipment and appurtenances are properly installed, meet their operating cycles and are free from defects such as overheating, overloading, and undue vibration and noise. Operating field tests shall consist of the following:

   a. Check equipment for excessive vibration and noise as specified herein.

   b. Check motor current draw under load conditions. The rated motor nameplate current shall not be exceeded.

c. Recheck alignment with dial indicators where applicable, after unit has run under load for a minimum of 24 hours.

D. In addition to the above described field tests, any other tests specifically required by the Section entitled “Pumps-General,” the individual equipment Specifications, or by the manufacturer shall be performed.

E. Until final field tests are acceptable to the Engineer, the Contractor shall make all necessary changes, readjustments and replacements at no additional cost to the City.

F. Upon acceptance of the field tests, a blue tag will be issued. The tag will be signed by the Engineer and attached to the unit. The tag shall not be removed and no further construction work will be performed on the unit, except as required during start-up operations and directed by the Engineer.

G. Defects which cannot be corrected by installation adjustments will be sufficient grounds for rejection of any equipment.

H. All costs in connection with field testing of equipment such as lubricants, temporary instruments, labor, equipment, etc., shall be borne by the Contractor. Power, fuel, chemicals, water, etc. normally consumed by specific equipment shall be supplied by the City unless otherwise specified in the individual equipment specifications.

I. The Contractor shall be fully responsible for the proper operation of equipment during tests and instruction periods and shall neither have nor make any claim for damage which may occur to equipment prior to the time when the City formally takes over the operation thereof.

J. Field testing of electric motors shall be in accordance with Division 16, Electrical.

3.07 VIBRATION TESTING

A. Unless specified otherwise in the detailed equipment specifications, each pump, blower, compressor, motor and/or similar item of stationary rotating equipment having a rated power in excess of 40HP shall be tested after installation for acceptable vibration levels.

B. Vibration testing shall be performed by an experienced factory-trained and authorized third-party analysis expert (not a sales representative) retained by the Contractor and approved by the Engineer. Each unit or pump system shall be tested separately without duplicate equipment running. All field testing shall be done in the presence of the Engineer. The Engineer shall be furnished with four (4) certified copies of vibration test data for each test performed.

C. For systems with variable speed drives, tests shall be conducted at various speeds between maximum and minimum. Testing shall also be conducted at dynamically varying fixed speeds from minimum to maximum using a sinusoidal speed setpoint signal generator. For systems with two-speed drives, tests shall be conducted at both speeds. For systems with constant-speed drive, tests shall be conducted under various loading conditions as determined by the Engineer.

D. All field vibration tests shall be performed with the equipment operating on the product for which it is intended, or a substitute acceptable to the Engineer.

E. The term displacement, as used herein, shall mean total peak-to-peak movement of vibrating equipment, in mils; velocity or speed of the vibration cycle, measured in G's. Displacement and velocity shall be measured by suitable equipment equal to IRD Mechanalysis, Bentley, Nevada.

E. Frequency of vibration, in cycles per minute (cpm), shall be determined when vibration exceeds specified levels or as otherwise necessary. Vibration shall be measured on the bearing housing, unless other locations are deemed necessary by the vibration analysis expert and Engineer.

F. For all equipment tested, vibration shall be checked in the radial and axial directions. Unless otherwise specified elsewhere, axial vibration shall not exceed 0.1 in/sec; and radial vibration shall not exceed 0.2 in/sec. For pumps radial vibration shall not exceed that permitted by the Hydraulic Institute Standards except that, at vibration frequencies in excess of 8,000 cpm, the velocity shall not exceed 0.2 in/sec.

G. Copies of test results shall be submitted to the Engineer for review. Should the vibration field test results exceed shop test results, the manufacturer’s recommendations, or the limits specified herein, the Contractor shall correct the deficiencies within thirty (30) days. After corrections have been completed, the vibration testing shall be re-run and the results re-submitted to the Engineer for review.

H. Noise or vibration in any rotating equipment which the Engineer determines to be excessive or damaging and falls outside of the acceptable limits for that particular piece of equipment, shall be cause for rejection.

3.08 FAILURE OF EQUIPMENT TO PERFORM

A. Any defects in the equipment or failure to meet the guarantees or performance requirements of the Specifications shall be promptly corrected by the Contractor by replacements or otherwise.

B. If the Contractor fails to make these corrections, or if the improved equipment shall fail again to meet the guarantees or specified requirements, the City, notwithstanding they having made partial payment for work and materials which have entered into the manufacture of said equipment, may reject said equipment and order the Contractor to remove it from the premises at the Contractor's expense.

C. The Contractor shall then obtain specified equipment to meet the contract requirements or upon mutual agreement with the City, adjust the contract price to reflect not supplying the specific equipment item.

D. In case the City rejects said equipment, then the Contractor hereby agrees to repay to the City all sums of money paid to the Contractor for said rejected equipment on progress certificates or otherwise on account of the lump sum prices herein specified.

E. Upon receipt of said sums of money, the City will execute and deliver to the Contractor a bill of sale of all their rights, title, and interest in and to said rejected equipment; provided,

however, that said equipment shall not be removed from the premises until the City obtains from other sources other equipment to take the place of that rejected.

F. Said bill of sale shall not abrogate City's right to recover damages for delays, losses, or other conditions arising out of the basic contract.

3.09 PAINTING

A. All surface preparation, shop painting, field repairs, finish painting, and other pertinent detailed painting specifications shall conform to the Section entitled "Painting."

B. All shop coatings shall be compatible with proposed field coatings.

C. All inaccessible surfaces of the equipment, which normally require painting, shall be finished painted by the manufacturer. The equipment and motor shall be painted with a high quality epoxy polyamide semi-gloss coating specifically resistant to chemical, solvent, moisture, and acid environmental conditions, unless otherwise specified.

D. Gears, bearing surfaces, and other unpainted surfaces shall be protected prior to shipment by a heavy covering of rust-preventive compound sprayed or hand applied which shall be maintained until the equipment is placed in operation. This coating shall be easily removable by a solvent.

3.10 WELDING

A. The Equipment Manufacturer's shop welding procedures, welders, and welding operators shall be qualified and certified in accordance with the requirement of AWS D1.1 "Structural Welding Code - Steel" or AWS D1.2 "Structural Welding Code - Aluminum" of the American Welding Society, as applicable.

B. The Contractor's welding procedures, welders, and welding operators shall be qualified and certified in accordance with the requirements of AWS D1.1 "Structural Welding Code - Steel" or AWS D1.2 "Structural Welding Code - Aluminum" of the American Welding Society, as applicable.

C. The Contractor shall perform all field welding in conformance with the information shown on the Equipment Manufacturer's drawings regarding location, type, size, and length of all welds in accordance with "Standard Welding Symbols" AWS A2.0 of the American Welding Society, and special conditions, as shown by notes and details.

- END OF SECTION -

SECTION 11100

PUMPS, GENERAL

PART 1 – GENERAL

1.01 THE REQUIREMENT

A. The Contractor shall furnish and install all tools, supplies, materials, equipment and labor necessary for the installation, testing, and placing into operation of all pumps and pumping appurtenances, complete and operable, all in accordance with the requirements of the Contract Documents.

B. All pumping equipment shall be provided in accordance with the requirements of the Section entitled "Equipment General Provisions."

C. The provisions of this Section shall apply to all pumps and pumping equipment specified, except where otherwise specified in the Contract Documents.

D. The Contractor, through a single Supplier, shall have unit responsibility for the furnishing and functional operation of a given type of complete pump systems including the pumps, drives, drive motors, speed control equipment (where variable speed drives are required) and accessories. The designated single Supplier, however, need not manufacture more than one part of the unit (pump, or motor and drive), but shall coordinate the design, assembly, testing, and erection of the unit(s) as specified herein.

E. The pumps shall be provided complete with all accessories, shims, sheaves, couplings, and other appurtenances as specified, and as may be required for a complete and operating installation.

F. The Supplier shall include, in its bid, time, labor, materials and tools required for installation assistance, testing, and start-up with the Contractor.

1.02 RELATED WORK SPECIFIED ELSEWHERE

A. Section 01300 – Submittals

B. Section 05500 – Metal Fabrications

C. Section 09900 – Painting

D. Section 11000 – Equipment General Provisions

E. Section 15000 – Basic Mechanical Requirements

F. Section 16000 – Basic Electrical Requirements

G. Section 16480 – Low Voltage Electric Motors

1.03 REFERENCE SPECIFICATIONS, CODES AND STANDARDS

A. All equipment, materials, and installations shall conform to the requirements of the most recent editions with the latest revisions, supplements, and amendments of the specifications, codes and standards listed herein.

B. Codes: The Building Code, as referenced herein, shall be the Florida Building Code (FBC).

C. Commercial Standards: Pumping system equipment, installation and testing shall be in accordance with the following applicable codes and standards:

1. Hydraulic Institute

a. ANSI//HI 3.1-3.5 Rotary Pumps for Nomenclature, Definitions, Application and Operation

b. ANSI/HI 3.6 Rotary Pump Test

c. ANSI/HI 9.6.1 Rotodynamic Pumps – Guideline for NPSH Margin

d. ANSI/HI 9.6.2 Rotodynamic Pumps for Assessment of Applied Nozzle Loads

e. ANSI/HI 9.6.3 Rotodynamic Pumps – Guideline for Operating Regions

f. ANSI/HI 9.6.4 Rotodynamic Pumps for Vibration Measurements and Allowable Values

g. ANSI/HI 9.6.5 Rotodynamic Pumps Guideline for Condition Monitoring

h. ANSI/HI 9.6.6 Rotodynamic Pumps for Pump Piping

i. ANSI/HI 9.6.8 Rotodynamic Pumps -Guideline for Dynamics of Pumping Machinery

j. ANSI/HI 9.8 Rotodynamic Pumps for Pump Intake Design

k. ANSI/HI 11.6 Rotodynamic Submersible Pumps for Hydraulic Performance, Hydrostatic Pressure, Mechanical and Electrical Tests

l. ANSI/HI 12.1-12.6 Rotodynamic Slurry Pump for Nomenclature, Definitions, Applications and Operation

m. ANSI/HI 14.1-14.2 Rotodynamic Pumps for Nomenclature and Definitions

n. ANSI/HI 14.3 Rotodynamic Pumps for Design and Application

o. ANSI/HI 14.6 Rotodynamic Pumps for Hydraulic Performance Acceptance Tests

2. American Society of Mechanical Engineers

    a. ANSI/ASME B73.1 Specifications for Horizontal End Suction Centrifugal Pumps for Chemical Process

3. American Petroleum Institute

    a. ANSI/API Standard 610 Centrifugal Pumps for Petroleum, Petrochemical and Natural Gas Industries

4. American Water Works Association

    a. ANSI/AWWA E103 Standard for Horizontal and Vertical Line-Shaft Pumps

5. American Society for Testing and Materials

    a. A36 Specification for Structural Steel

    b. A48 Specification for Gray Iron Castings

    c. A53 Specification for Pipe, Steel, Black and Hot-Dipped, Zinc-Coated, Welded and Seamless

    d. A148 Specification for Steel Castings, High Strength, for Structural Purposes

    e. A193 Specification for Alloy Steel and Stainless Steel Bolting Materials for High Temperature Service

    f. A276 Specification for Stainless Steel Hot/Cold-Finished Bars

    g. A322 Specification for Steel Bars, Alloy, Standard Grades

    h. A514 Specification for High Yield Strength, Quenched and Tempered alloy Steel Plate, Suitable for Welding

    i. A532 Specification for Abrasion-Resistant Cast Irons

    j. A536 Specification for Ductile Iron Castings

    k. A565 Specification for Martensitic Stainless Steel Bars

    l. A582 Specification for Free-Machining Stainless and Heat-Resisting Steel Bar, Hot-Rolled and Cold-Rolled

    m. A743 Specification for Castings, Iron-Chromium, Iron-Chromium-Nickel and Nickel-Base, Corrosion-Resistant for General Application

    n. B148 Specification for Aluminum-Bronze Sand Castings

    o. B584 Specification for Copper Alloy Sand Castings for General Application

6. American National Standards Institute

   a. B16.1 Standard for Cast Iron Pipe Flanges and Flanged Fittings

   b. B16.5 Standard for Pipe Flanges and Flanged Fittings

7. ANSI/NFPA 70 National Electric Code

8. Society of Automotive Engineers SAE J404 Chemical Compositions of SAE Alloy Steels

9. Standard, ISO 1940 – Mechanical Vibration – Balance quality requirements for rotors in a constant rigid state

1.04 CONTRACTOR SUBMITTALS

A. Shop Drawings: Shop drawings of all pumps shall include the following information in addition to the requirements of the Sections entitled “Submittals” and “Equipment General Provisions”:

1. Pump name, identification number and specification number.

2. Performance characteristics and descriptive data, including but not limited to pump performance curves at rated speed and reduced speeds (if reduced speeds are specified). Curves shall indicate flow, head, impeller diameter, efficiency, brake horsepower, and NPSH required. Curves shall identify minimum continuous stable flow (minimum flow to avoid suction recirculation), preferred operating region (POR) and allowable operating region (AOR) per the latest version of ANSI/HI 9.6.3. Performance curves submitted shall be for the entire pump assembly, including efficiency corrections and losses. Pump performance curves shall be submitted both in the form of performance data cut sheets and in tabular format. Tabular data shall include the following:

   a. Flow

   b. Pump Head

   c. NPSH required

   d. Pump Efficiency

   e. A minimum of 10 data points shall define rotodynamic pump performance curves listed above. Performance curve data points shall include the following:

      1) best efficiency point

      2) all specified operating points

      3) preferred operating range minimum and maximum

4) allowable operating range minimum and maximum

5) shutoff condition

6) runout

7) The remainder of the points shall be distributed evenly to clearly define the shape of each of the curves.

8) Each data point shall be reported to a minimum of three (3) significant figures.

9) The curve data shall align with the HI acceptance grade (1B, 2B, 1U, etc.) as specified in the individual pump specification and shall explicitly state the applicable tolerance band, as defined by the Hydraulic Institute Standards, associated with each value.

3. Minimum submergence requirements shall be provided for vertically suspended pumps and submersible pumps.

4. Detailed dimensional drawings and setting plans including but not limited to:

a. General cutaway sections

b. Materials

c. Dimension of shaft projections

d. Shaft and keyway dimensions

e. Shaft diameter

f. Shaft-impeller connection details

g. Dimension between bearings

h. General dimensions of pump

i. Suction head bolt orientation

j. Anchor bolt locations

k. Forces.

l. Assembly views

m. Provide weight of entire pump assembly, including motor and base weight of individual major subassemblies. Indicate the weight of each component, and

total static and dynamic loads imparted by the equipment to the supporting structure.

n. Impeller

o. Drawings shall identify each component by tag number to which the catalog data and detail sheets pertain

5. Details of shaft sealing system.

6. Electrical data including control and wiring diagrams.

7. Pump drive and motor data in accordance with Division 16 Electrical, of these documents. Complete motor data shall include but not be limited to size, make, type, and characteristics along with wiring diagrams. Where pump and motor speeds are to be regulated by variable speed drives, the Contractor shall coordinate, furnish and exchange all necessary requirements with the respective equipment manufacturers to ensure compatibility and shall submit pump, motor and variable speed drive shop drawings together as a complete system.

8. Information on bearing types and bearing life

9. Gear box design and performance criteria and AGMA service factor

10. Equipment protective device details and connection diagrams

11. Information on pump appurtenances including couplings, shaft guards, v-belt drive systems, etc.

12. Submersible pump submittals shall also include:

    a. Product data sheets for power and control cables, length of cables, and cable support system.

    b. Details on pump guide rail system and mounting requirements

    c. Minimum allowable pump submergence

    d. Details on submersible pump's retrieval system

13. Shipment, delivery, handling, and storage instructions

14. Installation instructions

15. Any additional information required to demonstrate compliance with the specifications.

B. Certification: The Contractor shall obtain written certification from the pump manufacturer, stating that the equipment will efficiently and thoroughly perform the required functions in accordance with these Specifications and as indicated on the Drawings, Contractor shall have unit responsibility for coordination of all equipment, including motors, variable speed drives, controls, and services required for proper installation and operation of the

completely assembled and installed pumps. The Contractor shall submit all such certificates to the Engineer.

C. O & M Manuals: Prior to start-up the Contractor shall furnish complete operations and maintenance manuals in accordance with the Sections entitled “Submittals” and “Equipment General Provisions.”

D. Spare Parts: The Contractor shall obtain from the pump manufacturer a set of the specified herein spare parts of all items of each pump, motor, and drive, subject to wear, such as seals, packing, gaskets, nuts, bolts, washers, wear rings, etc., as well as a set of spare bearings. It shall furnish all these parts suitably packaged and labeled with the part number, manufacturer’s description, and the associated equipment number described above for tools. Required spare parts shall be as specified in individual section of the specification. If not listed there, then spare parts shall conform to the standards of the proposed supplier.

E. Maintenance: Printed instructions relating to proper maintenance, including lubrication, and parts lists indicating the various parts by name, number, and diagram where necessary, shall be furnished in duplicate with each unit or set of identical units in each pumping station. A recommended spare parts list shall be included. Complete lubrication instructions and lubricant schedule, including manufacturer’s recommended lubricant. All lubricants shall be food grade, NSF 61 approved. Schedule shall include frequency of lubricant application, type of lubricant, and instructions regarding lubricant application.

F. Field Procedures: Instructions for field procedures for erection, adjustments, inspection, and testing shall be provided with the shop drawings.

1.05 QUALITY ASSURANCE

A. Performance Curves: All centrifugal pumps shall have a continuously rising curve. In no case shall the required horsepower at any point on the performance curve exceed the rated horsepower of the motor or drive. Safety factors will not be considered in determining compliance with this requirement.

B. Testing: Contractor shall be responsible for the coordination of factory and field tests as required in Part 3 of this section.

1.06 MANUFACTURER'S SERVICE REPRESENTATIVE

A. Unless otherwise referenced in the individual equipment specification section, as a minimum the services of the manufacturer's representative shall be provided for a period as stated in the following schedule:

Installation Trip (days)	Operation Trip Days*	Guaranteed Period Trip (days)
2	2	1

B. Any additional time required to achieve successful installation and operation shall be at the expense of the Contractor.

1.07 CLEANUP

A. After completion of the installation and testing, the Contractor shall remove all debris from the site, clean all the pumping equipment and controls, and hand over its work in perfect operating condition.

1.08 GUARANTEES, WARRANTIES

A. After completion, the Contractor shall furnish to the City the manufacturer's written guarantees that the pumping equipment will operate with the published efficiencies, heads, and flow ranges and meet these Specifications. The Contractor shall also furnish the manufacturer's warranties as published in its literature and as specified.

PART 2 – PRODUCTS

2.01 GENERAL

A. Wherever it is specified that a single Supplier shall be responsible for the compatible and successful operation of the various components of any pumping equipment, it shall be understood to mean that the Contractor shall furnish and install only such pumping equipment as the designated single Supplier will certify is suitable for use with its equipment and with the further understanding that this in no way constitutes a waiver of any specified requirements.

B. All combinations of manufactured equipment which are provided under these Specifications shall be entirely compatible, and the Contractor shall be responsible for the compatible and successful operation of the various components of the units conforming to specified requirements. All necessary mountings and appurtenances shall be included.

C. Where two or more units of the same type and/or size of pumping equipment are required, such units shall all be produced by the same manufacturer.

2.02 MATERIALS

A. All materials employed in the pumping equipment shall be suitable for the intended application; material not specifically called for shall be high-grade, standard commercial quality, free from all defects and imperfection that might affect the serviceability of the product for the purpose for which it is intended, and shall conform to the following requirements unless otherwise specified in individual pumping equipment Specifications:

1. Cast iron pump casings and bowls shall be of close-grained gray cast iron, conforming to ASTM A48, or equal.

2. Bronze pump impellers shall conform to ASTM B584, “G Bronze” or ASTM B148 for Aluminum Bronze.

3. Stainless steel pump shafts shall be of ASTM A-743 CF-8M. Miscellaneous stainless steel parts shall be of Type 316.

4. All anchor bolts, nuts and washers shall be Type 316 stainless steel, unless otherwise specified in individual pumping equipment Specifications.

2.03 PUMP APPURTENANCES

A. Nameplates: In addition to the requirements of the Section entitled "Equipment General Provisions," nameplate data for each pump shall include manufacturer's name, year of manufacture, model number, serial number, the rating in gallons per minute, rated total dynamice head, speed in rotations per minute, and efficiency at the primary design point.

B. Solenoid Valves: Where required, the pump manufacturer shall furnish and install solenoid valves on the water or oil lubrication lines. Solenoid valve electrical rating shall be compatible with the motor control voltage and shall be furnished complete with all necessary conduit and wiring installation from control panel to solenoid.

C. Pressure Gages: The Contractor shall furnish and install pressure gauges on the suction and discharge of each pump, except wet-pit submersible pumps and vertical turbine pumps. The Contractor shall furnish and install pressure gauges on the discharge piping of each wet pit submersible pump and vertical turbine pump in the locations shown on the Drawing or as directed by the Engineer Pressure gages shall be located in a representative location, where not subject to unbalanced flow conditions, shock or vibrations, in order to achieve true and accurate readings. Pressure gages shall be furnished under Division 17, Instrumentation, of these documents.

D. Variable Speed Drives: Variable speed drives, drive motors, speed control equipment, and accessories shall be furnished in accordance with Division 16, Electrical, of these documents.

2.04 PUMP REQUIREMENTS - GENERAL

A. Flanges: Suction and discharge flanges shall conform to ASME B16.1 or B16.5 dimensions.

B. Handholes: For pumps in raw sewage service and as required by individual pump specifications, handholes shall be provided on the pump suction nozzle and the pump volute and shall be shaped to follow the contours of the casing or adjoining piping to avoid any obstructions in the water passage.

C. Mechanical Seals: Mechanical seal designs shall be selected for highest reliability and for rugged service. Mechanical seals shall be provided where required by the Specifications. Unless the pump manufacturer recommends better seal for a specific application, mechanical seals shall be furnished as specified in individual pumping equipment sections.

D. For all seal arrangements, seals must be flushed by the pumped fluid or externally supplied liquid as indicated by individual pumping equipment specifications or as required by manufacturer, in order to maintain reliable seal performance.

E. All drivers and shafting shall comply with the requirements of the Part 2 – Products.

F. Drive shaft assemblies shall be sized such that critical speed conforms to the following requirements:

1. For constant speed pumps, operating speed shall not be more than 75 percent of critical speed, nor within the range of 44 percent to 56 percent of critical speed for horizontal shafts.

2. For variable speed pumps, full speed shall not be more than 44 percent of critical speed for horizontal shafts or 75 percent of critical speed for vertical shafts.

G. All shafting shall be dynamically balanced in accordance with the recommendations of the shafting manufacturer.

H. Drive shaft dimensions and, where applicable, the location of steady bearing supports are shown approximately to scale on the drawings. Exact dimensions and support arrangements will depend on the motor and pump which the Contractor proposed to install. The Contractor shall submit complete shop drawings and Specifications to the Engineer for review of the drive shaft arrangement proposed.

I. The drive shaft manufacturer shall furnish to the Contractor complete installation instructions for the equipment furnished. The Contractor shall install the drive shaft assemblies per the manufacturer's instructions. The shafts shall be installed with a minimum of one degree offset and a maximum of five degrees offset at each universal joint.

J. The Contractor shall furnish and install a heavy-duty shaft guard for all drive shafting which is less than seven feet above floor or platform level in accordance with the provisions of Paragraph 1910.210 of OSHA Rules and Regulations. Provision shall be made in the guard as necessary for lubrication and inspection access of the joints and bearings without the necessity of removing the entire guard assembly.

K. The minimum ABMA L10 bearing life for all pump, motor and drive bearings shall be 60,000 hours unless otherwise stated in the individual pump specification sections.

PART 3 – EXECUTION

3.01 INSTALLATION

A. General: Pumping equipment shall be installed in accordance with the manufacturer's recommendations, industry accepted practices, acceptable procedures submitted with the shop drawings and as indicated on the Drawings, unless otherwise accepted by the Engineer.

B. Alignment: Equipment shall be field tested to verify proper alignment, operation as specified, and freedom from binding, scraping, vibration, shaft runout, or other defects. Pump drive shafts shall be measured just prior to assembly to ensure correct alignment without forcing. Equipment shall be secure in position and neat in appearance.

C. Lubricants: The installation work shall include furnishing the necessary oil and grease for initial operation.

D. Connections: All motors shall be connected to the conduit system by means of a short section (18-inch minimum) of weatherproof flexible conduit, unless otherwise indicated. For connections for No. 6 AWG and smaller wire size, the Contractor shall furnish flexible conduit with an acceptable grounding conductor inside the flexible section. For connections of No. 4 AWG or larger wire size, the Contractor shall install a grounding conduction in the conduit and terminate at the motor control center with an acceptable grounding clamp.

E. Drains: All gland seals, air valves, and drains shall be piped to the nearest floor sink or drain with galvanized steel pipe or copper tube, properly supported with brackets.

3.02 TESTING

A. Factory Testing: The Contractor shall be responsible for the coordination of the following tests of each pump, variable speed drive, and motor. Pump tests shall utilize the actual motors and pump-motor bases and couplings to be furnished with the pumping equipment. Where required as indicated by the individual pump specification sections, variable speed pumps shall be tested with the actual variable speed controllers supplied for the project. Use of the pump manufacturers standard test motors and test stand is not acceptable.

1. General: Tests shall be performed in accordance with the Standards of the Hydraulic Institute, Inc. Tests shall be performed on the actual assembled unit, including pump, motor, coupling and base as a minimum. Prototype and mathematical model tests will not be acceptable. Pump shop tests shall be made by the manufacturer and certified curves shall be submitted prior to witness tests. The shop tests shall consist of standard IEEE tests of motors, operation of the pumps and motors installed on the actual pump and motor bases to be furnished for proper balance of equipment and all other requirements as specified under this section. Pumps motors and drives shall be factory witness tested, as defined herein. All electronic transducers, meters, gauges, and test instruments shall be calibrated within 90 days prior to the scheduled test and certified calibration data shall be provided. Differential pressure type flow meters, such as venturi meters are preferred and shall have been calibrated, and their accuracy certified within the past 12 months. In case of failure of any unit to meet the test requirements, the manufacturer shall make such alterations as are necessary, and the tests shall be repeated without additional cost to the City until the equipment test is passed.

2. Factory Witnessed Tests: All pumps and motors, 150 horsepower and larger, shall be factory tested as complete, assembled units, as specified above, and witnessed by a representative of the Engineer and City. The Contractor shall give the Engineer and City a minimum of two weeks notification prior to the test.

3. Certified Test Data: Factory test results shall be submitted to the Engineer in accordance with the Section entitled “Submittals.” No equipment shall be shipped until the test data is acceptable to the Engineer. Acceptance tolerances shall be in accordance with ANSI/HI 14.6 grade 1U for the design point and grade 3B for other points unless otherwise stated in the individual equipment specification sections. Tests shall include those listed below. The applicable best standard for submersible sump and non-clog pumps shall be ANSI / HI 11.6 Submersible Pump Test.

4. Hydrostatic Tests: Hydrostatic tests should be carried out in accordance with ANSI/ Hydraulic Institute Standard 14.6 at 130 percent of the rated pressure. Rated pressure shall be the maximum operating suction pressure plus the pump differential pressure at the design point. Pumps with plastic casings shall be tested at 110% of the rated pressure.

5. Hydraulic Performance Test: Test shall be at rated full speed with a minimum of 5 readings between shutoff head and 25-percent above design capacity including the specified operating conditions of head and capacity, recorded on data sheets as defined by the Hydraulic Institute, signed, dated, and certified. Certified pump tests shall be conducted through the specified range of flow vs./head/capacity/efficiency curves plotted at pump design speed prior to connection to variable speed drive control systems (where provided). During each test, the pump shall be run at each head/capacity condition as specified in the pump schedule for sufficient time to accurately determine and record capacity, head, pump speed, drawn horsepower, pump efficiency and motor efficiency. Where the pump application requires variable speed, the above tests shall be repeated at 90 percent, 80 percent and 65 percent of full speed. A minimum of 5 readings are required at each test speed.

6. NPSH Tests: Where required by the individual equipment specification sections, NPSH tests shall be conducted to demonstrate satisfactory operation with the specified available NPSH.

B. Field Tests: All pumping units shall be field tested after installation, in accordance with the Contract Documents, to demonstrate satisfactory operation, without causing excessive noise, vibration, cavitation, and overheating of the bearings. The field testing shall be performed in the presence of an experienced field representative of the manufacturer of each major item of equipment, who shall supervise the following tasks and shall certify in writing that the equipment and controls have been properly installed, aligned, lubricated, adjusted, and readied for operation:

1. Start-up: Start-up, check, and operate the equipment over the entire speed range. The vibration shall be within the amplitude limits recommended in the Hydraulic Institute Standards and it shall be recorded at a minimum of four pumping conditions defined by the Engineer.

2. Performance: Pump performance shall be documented by obtaining concurrent readings, showing motor voltage, amperage, pump suction head, and pump discharge head, for at least four pumping conditions at each pump rpm. Each power lead to the motor shall be checked for proper current balance. Flow shall be measured to the extent possible by permanently installed instrumentation or drawdown measurement.

3 Bearing Temperatures: Bearing temperatures shall be determined by a contact-type thermometer. A running time of at least 20 minutes shall be maintained for this test, unless liquid volume available is insufficient for a complete test.

4. Natural-Frequency: Natural frequency testing of each installed vertical turbine pump assembly using the “bump test” method.

5. Vibration: Operate the equipment over the entire speed range. The vibration shall be within the limits of ANSI/HI 9.6.4 for field testing and it shall be recorded at a minimum of 4 steady state speed and pumping conditions as defined by the City's representative as well as under actual variable pressure, flow and speed pumping conditions.

6. Certification: The field testing shall be witnessed by the City or its representative. The Contractor shall submit to the Engineer a written notification of all pump field tests a minimum of one week prior to testing. In the event any of the pumping equipment fails to meet the above test requirements, it shall be modified and retested in accordance with the requirements of these Specifications. The Contractor shall then certify in writing that the equipment has been satisfactorily tested, and that all final adjustments thereto have been made. Certification shall include date of final acceptance test, as well as a listing of all persons present during tests, and resulting test data. The costs of all Work performed in this Paragraph by factory-trained representatives shall be borne by the Contractor.

7. Acceptance: In the event of failure of any pump to meet any of the above requirements or efficiencies, the Contractor shall make all necessary modifications, repairs, or replacements to conform to the requirements of the Contract Documents and the pump shall be re-tested at no additional compensation, until found satisfactory.

3.03 PROTECTIVE COATING

A. Painting shall be in accordance with the Sections entitled "Equipment General Provisions" and "Painting."

- END OF SECTION -

SECTION 11105

SUBMERSIBLE AXIAL FLOW PUMP, PROPELLER AND MIXED FLOW

PART 1 – GENERAL

1.01 THE REQUIREMENT

A. Provide all labor, materials, equipment, motors, anchorage systems, and incidentals necessary for the installation, testing, and placing into operation submersible axial flow pumps at the locations shown on the Drawings and as specified herein. All pumps shall be supplied by the same manufacturer.

B. Equipment shall be provided in accordance with the requirements of the section entitled "Equipment General Provisions" and the section entitled "Pumps – General".

C. The Manufacturer shall have unit responsibility for coordinating the proper pump mounting system with the Contractor to ensure stable pump operation. The Contractor shall install, anchor, test, and align the equipment such that vibration levels are within the Manufacturer's recommended tolerances. The Contractor shall provide all supports, stiffeners, etc that may be required to provide systems that operate reliably and within vibration limits specified by the Manufacturer.

1.02 COORDINATION

A. To assure unity of responsibility, the motor and pump provided as part of this Contract shall be furnished and coordinated by the pump manufacturer. The Contractor shall assume full responsibility for the coordination, factory testing, satisfactory installation and operation of the pumping systems, including pumps, motors, and electrical controls as specified.

B. Pump motor starters shall be furnished per Division 16. Pump control panels shall be furnished per Division 17. Contractor shall facilitate coordination between the pump manufacturer, Division 16 Supplier and Division 17 Supplier to ensure specified pump functionality and full compatibility with the electrical and control equipment furnished under this contract.

1.03 RELATED WORK SPECIFIED ELSEWHERE

A. Section 11000 – Equipment General Provisions

B. Section 11100 – Pumps General

C. Section 16480 – Low Voltage Electric Motors

1.04 SUBMITTALS

A. Performance Affidavit: A performance affidavit shall be submitted with the Shop Drawings in accordance with, or in addition to the submittal requirements specified in the section

entitled “Submittals”; and the section entitled “Equipment General Provisions”.

B. Shop Drawings: Shop drawings shall be furnished as specified in in the sections entitled “Submittals” and “Pumps, General”. Pump Curves shall be submitted at minimum, intermediate and maximum operating speed if variable speed control is specified.

C. O&M Manuals: Prior to start-up the Contractor shall furnish complete operations and maintenance manuals in accordance with the section entitled “Submittals”; and the section entitled “Equipment General Provisions”.

D. Factory Test Reports and Field Test Reports: Factory test reports and Field Test Reports shall be submitted in accordance with the section entitled “Pumps, General”.

E. Pipe Layout Drawings: Contractor shall submit pipe layout drawings and schedule with the pump shop drawings.

F. Grout: Contractor shall submit manufacturer’s information on type of grout to be used.

1.05 WARRANTY AND GUARANTEE

A. Warranty and Guarantee shall be as specified in the section entitled “Equipment General Provisions”.

PART 2 – PRODUCTS

2.01 ACCEPTABLE MANUFACTURERS

A. Submersible axial flow pumps (propeller) shall be Xylem Flygt PL 7000 Series, Grundfos KPL Series, or equal.

B. Submersible axial flow pumps (mixed flow) shall be Xylem Flygt LL 3000 Series, Grundfos KWM Series, or equal.

C. Pump manufacturer shall have submersible pumps of comparable design and comparable capacity in successful operation for a minimum of ten years.

2.02 GENERAL DESCRIPTION

A. Identification

Location	River Oaks Outfall Station	River Oaks Inlet Station
Equipment Number	P-1001 P-1002 P-1003 P-1004	P-1001 P-1002
Quantity	4	2

B. Operating Conditions

Location	River Oaks Outfall Station	River Oaks Inlet Station
Duty	Intermittent	Intermittent
Drive	Constant Speed	Constant Speed
Ambient environment	Outdoors	Outdoors
Ambient temperature, degrees F	40 to 100	40 to 100
Ambient relative humidity, percent	0 to 100	0 to 100
Fluid service	Stormwater, screened	Stormwater, screened
Fluid temperature, degrees F	70 to 85	70 to 85
Minimum available NPSH, ft	39	22
Maximum size of spheres to pass, in. diameter	2	2

C. Performance Requirements

Pump Station Location	River Oaks Outfall Station	River Oaks Outfall Station	River Oaks Inlet Station
Equipment Number	P-1001 P-1002	P-1003 P-1004	P-2001 P-2002
Pump Type	Mixed Flow	Propeller	Propeller
Primary Design Point	6400 gpm @ 15 feet TDH	22,000 gpm @ 15 feet TDH	4,300 gpm @ 11.5 feet TDH
Hydraulic Performance Acceptance Grade	2B	2B	2B
Minimum Overall Efficiency at Primary Design Point, %	60	70	75

Secondary Design Point	8,000 to 8,900 gpm @ 8 feet TDH	25,000 to 28,000 gpm @ 9 feet TDH	5,100 gpm @ 5 feet TDH
Minimum Overall Efficiency at Secondary Design Point, %	45	60	50
Maximum NPSH required, ft	20	30	20
Maximum pump speed, rpm	700	705	1155
Nominal motor size, hp	45	135	25

D. Pump Dimensions:

Pump Station Location	River Oaks Outfall Station	River Oaks Outfall Station	River Oaks Inlet Station
Equipment Number	P-1001 P-1002	P-1003 P-1004	P-2001 P-2002
Nominal Impeller (Propeller) Diameter (mm)	400	570	273
Nominal Column Diameter (inches)	36	40	15 3/4
Column Length (inches)	As required	As required	As required
Nominal Discharge Flange Diameter (inches)	30	36	16

Pump dimensions may vary by manufacturer. The Contractor is responsible for adjusting piping and providing necessary reducers and fittings to install the pumps furnished in the piping arrangement shown on the Drawings. Contractor shall submit pipe layout drawings and schedule with shop drawings for pumps. All adjustments to piping and any required adjustments to the structure shall be included in the Contractor's bid price.

2.03 MATERIALS

A. Pump Design - The discharge column shall be permanently installed in the wet well and removable from the top slab by unbolting or supported from the sump floor as

recommended by the manufacturer. The pump shall be automatically and firmly connected to the discharge column when lowered down the discharge column. The connection shall prohibit rotational movement of the pump/motor within the discharge column. The pump shall be easily removed from the discharge column for inspection or service without the need to enter the wet well. The pumps shall not require the use of any bolts, nuts, or fasteners to the discharge column. The pump manufacturer shall provide stiffening and guiding webs at the pump support seat to ensure concentric positioning of the pump within the discharge column. The pump assembly shall be designed to be set into an opening in the top slab or floor of the pump station and be grouted and bolted to that top slab or sump floor which shall support the entire weight of the pump and discharge column assembly. The pump and column assembly shall be designed with sufficient mechanical stiffness such that vibration levels are within the manufacturer's tolerances.

B. Pump casing shall be made of close grained cast iron conforming to ASTM A48, Class 35B and shall provide smooth unobstructed passages large enough to pass solids of the specified size. All exposed nuts and bolts shall be Type 316 stainless steel.

C. Impellers (Propellers): Impellers (Propellers) shall be stainless steel and shall be statically, hydraulically, and dynamically balanced.

   a. Propellers for propeller pumps shall be 3 or 4 vane axial flow design, cast of ASTM A-743 CF8M stainless steel. Propeller blades shall be self-cleaning. A replaceable wear ring/inlet cone shall be installed in the pump housing to provide sealing between the pump housing and propeller.

   b. Impellers for mixed flow pumps shall be of a multi-vaned, double shrouded, non-clogging design. A wear ring system shall be used to provide sealing between the volute and suction inlet of the impeller. Wear rings shall be heat shrunk fitted onto the suction inlet of the impeller.

D. Pump Shaft: Pump and motor shaft shall be a solid, continuous shaft of Type 431 or Type 410 stainless steel, minimum, and shall be completely isolated from the pumped liquid. Shaft size shall be as recommended by the pump manufacturer, suitable for the specified operating conditions.

E. Sealing System: Each pump shall be provided with a tandem mechanical shaft seal system consisting of two independent seal assemblies. Seals shall operate in a lubricant reservoir which is easily accessible from the exterior of the unit. Seals shall not rely upon pumped media for lubrication. Complete manufacturer information for seals shall be submitted in accordance with the section entitled "Submittals". Seal lubricant shall be non-hazardous.

F. Pump Column: Pump column/enclosing tubes shall be Type 316 stainless steel with a minimum wall thickness of 0.375 inches and shall be fabricated by the pump manufacturer or supplier. Column/tube sections shall be flanged at each end with machined faces to ensure alignment. The pump manufacturer shall provide Type 316 stainless steel intermediate column supports and hardware as required or as shown on the drawings.

G. Formed Suction Inlet: Where shown on the drawings, the Contractor shall provide a formed suction inlet for each pump. The formed suction inlet shall be designed by the

pump manufacturer and shall be Type 316 stainless steel. The formed suction inlet shall be designed to support all static and dynamic loads of the pump, motor, discharge head, and column assembly for operation with vibration within the Manufacturer's tolerances. The formed suction inlet shall be designed to be mounted to the concrete surface of the sump floor. All mounting hardware including supports, braces, and anchor bolts shall be designed and provided by the pump manufacturers and shall be Type 316 stainless steel.

H. Discharge Head: Discharge head shall be Type 316 stainless steel and shall be fabricated by the pump manufacturer as part of the column assembly guide tube. Discharge heads shall be as shown on the Drawings and shall have an ANSI Standard flat faced 125-pound flange at the discharge connection. A stainless steel cover with rubber gasket shall be provided that bolts to the top of the discharge head. The discharge head shall be provided with sufficient stiffeners and reinforcement as required to withstand thrust and resist movement. The discharge head shall be provided with lifting bolts and eye lugs for installation and maintenance. When suspended from the top slab or where shown on the drawings, sole plates shall be provided for mounting on a concrete surface that the pump assembly shall be inserted into and fastened to so that the pump assembly may be removed later for service or replacement. Sole plates shall be Type 316SS and shall be designed to support all static and dynamic loads of the pump, motor, discharge head, and column assembly. All mounting hardware for base plates (including anchor bolts) shall be designed and provided by the pump manufacturer and shall be Type 316 stainless steel. Sole plates shall be drilled and tapped to match discharge head.

I. Installation of the pumps shall be performed after the sole plate is located and laser leveled to within 0.001 inch from corner to corner in both directions, grouted and cured for a minimum of seven days. The pump manufacturer or its authorized service representative shall provide an inspection report for review and approval to the Engineer prior to setting the remainder of the equipment.

J. Bearings shall be oil or grease lubricated with provisions for the addition or draining of lubricant. The bearings shall be designed for continuous heavy duty loads and for both axial and radial thrust loads. Bearings shall have a minimum ABMA L-10 life of 50,000 hours under worst possible operating conditions.

K. Bearing housing shall be constructed of cast iron, ASTM A48, Class 30 designed to provide a fully enclosed bearing housing.

2.04 ELECTRICAL REQUIREMENTS

A. Cables

1. Pump shall be furnished with integrally mounted flexible power and control cables for connection to the local disconnect switch, terminal junction box, or control panel, as shown on the Drawings. Pump manufacturer shall be responsible for reviewing the electrical drawings as necessary to determine the required cable length. All pumps for the same pumping application shall be provided with the same length of cable. No splices shall be allowed unless specifically indicated on the Drawings. Cable length shall be verified with the Engineer.

2. Cables shall be suitable for submersible pump application. The outer jacket shall be oil resistant chlorinated polyethylene rubber. Conductors shall be copper and shall be insulated with ethylene-propylene rubber (EPR). Filler and conductor separator materials shall be of non-wicking vulcanized rubber.

3. Cables shall be rated 600 volts and 90°C (194°F) with a 40°C (104°F) ambient and shall be sized according to NEC and ICEA or IEC standards.

B. Cable Entry

1. The pump manufacturer shall provide a cable protection and suspension system for all installations within the tube. Cable installation shall prevent contact with any surfaces which may abrade outer jacket of the cable.

2. The cable entry water seal design shall ensure a watertight and submersible seal at the pump without specific torque requirements. The cable entry shall be comprised of cylindrical elastomer grommets, flanked by stainless steel washers all having a close tolerance fit against the cable outside diameter and the entry inside diameter. The grommets shall be compressed by the entry body containing a strain relief function. The cable entry junction chamber and motor shall be separated by a stator lead sealing gland or terminal board, which shall isolate gaining access through the pump top. The junction chamber containing the terminal board shall be sealed from the motor by an elastomer compression seal O-ring. Connection between the cable conductors and stator leads shall be made with threaded compressed type binding post permanently affixed to the terminal board and be leak proof. Each pump shall be equipped with separate terminal board that totally isolates the incoming power supply from the pump motor. Alternate cable entry system shall be approved by Engineer.

3. As an acceptable alternate pump cable entry seal, cable leads shall enter at the top of the motor and shall allow the cable-to-motor connection to be accomplished in the field without soldering. All power and control lead wires shall be double sealed as they enter the motor in such a manner that cable-wicking will not occur. This sealing system shall consist of a rubber grommet followed by epoxy that is high in adhesive qualities and has a low coefficient of expansion. Each conductor shall have a small section of insulation removed to establish a window area of bare wire and each wire shall be untwisted and surrounded by epoxy potting material. A cable strain relief mechanism shall be an integral part of the sealing system. The cable sealing system shall be capable of withstanding a cable assembly pull test as required by Underwriters Laboratories. Power and control leads shall be terminated on a sealed terminal board.

C. Motor Requirements

Pump Station Location	River Oaks Outfall Station	River Oaks Outfall Station	River Oaks Inlet Station

Equipment Number	P-1001 P-1002	P-1003 P-1004	P-1001 P-1002
Rating	460V, 3ph, 60 Hz	460V, 3ph, 60 Hz	460V, 3ph, 60 Hz
Insulation	Class H	Class H	Class H
Temperature	Class B	Class B	Class B
Inverter Duty	No	No	No
Service Factor	1.15	1.15	1.15
Leak Detection Switches	Yes	Yes	Yes
Motor Winding Temperature Switches	Yes	Yes	Yes

D. The pump motor shall be a squirrel-cage induction type, housed in an air-filled watertight chamber. The stator winding and stator leads shall be moisture resistant. The use of bolts, pins, or other fastening devices requiring penetration of the stator housing shall not be allowed.

E. The motor shall be guaranteed for continuous submersible duty, capable of sustaining a minimum of fifteen (15) full voltage starts per hour without overheating.

F. The motor shall be provided with pre-lubricated radial and thrust bearings which are designed to carry the entire load which may be imposed upon it under all operating conditions.

G. All motors shall be of nationally known manufacture, shall be housed in enclosures specifically designed for submersible pump application.

H. Three thermal switches shall be embedded in the stator windings, one per phase, all wired in series. The temperature switches shall be normally closed and shall open upon a high stator temperature condition.

I. A float switch-type leakage sensor or moisture instrusion switch shall be installed in the oil-seal chamber or motor housing for leak detection. The resistance across the float switch shall change when the liquid in the oil-seal chamber rises beyond the level prescribed by the pump manufacturer. Float switch and thermal switches shall be wired in series inside the pump. Moisture intrusion switches shall be moisture absorbing, expansion type that open when moisture infiltrates the pump motor cavity, preventing the pump from operating and providing an alarm.

J. The motor shall be cooled by the flow of the pumped medium along the stator housing during operation. A water jacket or external cooling system shall not be accepted.

K. Motor horsepower shall be sufficient so that the pump is non-overloading throughout its entire performance curve.

L. In addition to the requirements prescribed above, the following shall be provided for all four (4) pumps at the River Oaks Outfall Pump Station.

1. One PT100 RTD for monitoring lower bearing temperature.

2. One PT100 RTD for monitoring stator temperature.

2.05 PUMP MONITORING AND CONTROL

A. Furnish pump monitoring relay with each pump for pump over-temperature and leakage monitoring. Operating principle shall be current sensing. Relay shall be capable of detecting pump leakage and over-temperature conditions independently, using a single pair of sensor wires.

B. Furnish relay with a pair of Form C relay contacts, each rated 5A at 250VAC. One relay contact shall operate upon an over-temperature condition. The other shall operate upon detection of a leak. LED Indicating lights for over-temperature and for leakage shall illuminate in response to the corresponding fault.

C. After detection of a fault, relay shall remain in the tripped condition until manually reset by the operator. Manual reset shall be via remote input contact closure.

D. Relay shall be suitable for operating on a 120VAC, 60hz power supply. If accommodations for 24VAC, 60 Hz power supply are required, they shall be provided by Contractor and included in bid price.

E. Pump monitoring system shall be Mini CAS II or MAS 711 as manufactured by Flygt, or IO112 / SM113 as manufactured by Grundfos or equal.

F. Pump vendor shall furnish pump starter vendor with monitoring relay for installation inside pump starter. Pump starters shall be furnished under Division 16.

2.06 FACTORY COATINGS

A. Unless specified as stainless steel, all interior and exterior surfaces of pump columns and discharge elbows and the exterior of the pump/motor assembly shall be painted in accordance with the requirements of the section entitled “Painting”.

2.07 SPARE PARTS

A. Spare parts shall be provided in accordance with the section entitled “Equipment General Provisions”.

B. The following spare parts shall be furnished for each pump:

1. One (1) impeller/propeller (trimmed as required to meet duty conditions)

2. One (1) set of wear rings

3. One (1) complete set of upper and lower mechanical seals or cartridge seals

PART 3 – EXECUTION

3.01 MANUFACTURER'S FIELD SERVICES

A. The services of a qualified manufacturer's technical representative shall be provided in accordance with Section 11000, Equipment General Provisions. **For each pump station**, field services shall include the following site visits:

Service	**Number of Trips per Pump Station**	**Number of Days per Trip**
Installation and Testing	1	1
Startup and Training	1	2

- END OF SECTION -

SECTION 11420

MECHANICAL SCREENS

PART 1 - GENERAL

1.01 DESCRIPTION

A. Provide, install, test, and place into satisfactory operation mechanically cleaned bar screens with all appurtenances required for a complete installation as indicated and in compliance with Contract Documents.

1.02 REFERENCES

A. American Society for Testing and Materials International (ASTM):

1. A193: Standard Specification for Alloy-Steel and Stainless Steel Bolting Materials for High Temperature or High Pressure Service and Other Special Purpose Applications.

2. A276: Standard Specification for Stainless Steel Bars and Shapes.

3. A351: Standard Specification for Castings, Austenitic, for Pressure-Containing Parts.

4. A666: Standard Specification for Annealed or Cold-Worked Austenitic Stainless Steel Sheet, Strip, Plate, and Flat Bar.

B. Related Work Specified Elsewhere

1. Division 1 – General Requirements

2. Division 11 – Equipment

3. Division 16 – Electrical

1.03 SUBMITTALS

A. Submit the following shop drawings in accordance with Section 01300:

1. Manufacturer's Performance Affidavit in accordance with Section 11000.

2. Certified shop and erection drawings. Contractor shall submit electronic files of the proposed equipment in the capacity, size, and arrangement as indicated and specified.

3. Drawings showing materials of construction, thicknesses, operating and maintenance envelope and assembly weight.

4. Calculations of maximum headloss and velocity at peak flow for clean screens and 30% blinded screen conditions to verify screens can handle peak flows. Structural calculations of screen design strength to handle the maximum head differential

across the screens (maximum water level upstream and no water downstream) to verify screens can handle full blinded conditions. Calculations shall be signed and sealed by a Professional Engineer.

5. Complete motor nameplate data as defined by NEMA.

6. Gear reducer data including service factor, efficiency, torque rating and materials.

7. Shop drawing data for accessory items.

8. Certified setting plans, with tolerances, for anchor bolts.

9. Manufacturer's literature as needed to supplement certified data.

10. Operating and maintenance instructions and parts lists.

11. List of recommended spare parts other than those specified.

12. Shop and field inspection reports.

13. Equipment shop test results.

14. Qualifications of field service engineer.

15. Recommendations for short and long-term storage.

16. Shop and field testing procedures, set up and equipment to be used.

17. Special tools.

18. Schematic control and power wiring diagrams including interconnecting and internal wiring diagrams

19. Control panel drawings

20. Manufacturer’s product data, specifications and color charts for shop painting.

21. Provide listing of reference installations with contact names and telephone numbers.

22. Equipment weight and lifting points for installation and removal purposes.

23. Provide a listing of the materials recommended for each service specified and indicated.

1.04 WARRANTY:

A. Warranty and Guarantee shall be as specified in Section 11000 with the exception that the warranty period shall be for two (2) years.

1.05 QUALITY ASSURANCE:

A. Comply with the requirements specified in Section 01600.

B. Equipment specified shall be the product of one manufacturer.

C. The Contractor shall obtain the mechanical screens, controls and appurtenances from the screen manufacturer, as a complete and integrated package to ensure proper coordination and compatibility and operation of the system.

D. Equipment specified shall be manufacturer's standard cataloged product and modified to provide compliance with the Drawings, Specifications and the service conditions specified and indicated.

E. Welding: In accordance with latest applicable American Welding Society Code and Canadian Standards Association Welding Procedure Specifications, or equivalent.

F. Shop tests as specified.

G. Services of Manufacturer's Technical Representative as stated in Section 11000 and as specified herein.

H. Manufacturer of specified equipment shall have a minimum of ten (10) operating installations with equipment of the size specified and in the same service as specified operating for not less than five (5) years.

I. If equipment proposed is heavier or taller, different width, or discharge arrangement than specified and indicated; provide all structural, architectural, mechanical, electrical and plumbing revisions at no additional cost to the City.

J. Electrical Equipment Labeling Requirements:

1. Control panel shall be fabricated in a Underwriters Laboratories (UL) listed panel shop and control panel shall bear the UL Label. Provide fabrication in compliance with all applicable ASTM standards or equivalent international standards.

K. The equipment manufacturer's shop welds, welding procedures, welders and welding operators shall be qualified and certified in accordance with the requirements of the latest edition of ANSI/AWS D1.6 "Structural Welding Code - Steel" published by the American Welding Society or equivalent standard.

L. Bolts, nuts and washers shall be AISI 304 stainless steel furnished in accordance with ASTM A193 unless otherwise specified.

PART 2 - PRODUCTS

2.01 MANUFACTURERS

A. The mechanically cleaned bar screens shall be Duperon Corporation; FlexRake® Model, Heavy Duty Mechanical Bar Screen or equal.

2.02 SYSTEM DESCRIPTION

A. The mechanical screens shall be designed for operation in a rectangular channel for removal of screenings from stormwater and discharge the screenings onto a concrete deck. The screen, drives and controls shall be as described in this Section.

B. Screen shall be a mechanically cleaned bar screen with link system design. The bar screen shall have a head sprocket only, with no sprockets, bearings, idlers, or similar drive components under water to trap the chain. Equipment featuring reciprocating rake arms or lower bearings/sprockets/tracks below the water is not acceptable. The design shall be such to ensure that all maintenance can be accomplished at the operating floor level or above. No part of the drive system including sprockets shall be located below the water surface at maximum design flow.

C. Mechanical Screen performance requirements and operating data are indicated as follows:

Equipment ID Number	**SCR-1001 and SCR-1002**
Number of Units	2
Channel width at screen	10.5 feet
Channel invert at screen, elevation (2)	(-) 8.50 NAVD
Top of channel elevation (2)	6.00 NAVD
Discharge height above operating floor, minimum	7 feet
Angle of Installation, degrees from horizontal	30
Maximum flow rate through channel (peak flow)	100 MGD
Maximum upstream water elevation	3.00 NAVD
Minimum flow rate through channel	9 MGD
Minimum upstream water elevation	(-) 4.00 NAVD
Maximum head differential across the screen (1)	1 foot
Bar Spacing (clear space), maximum	2 inches
Rake Travel Speed, Minimum (at drive operating speed of 0.5 rpm)	28 inches/minute
Rake Spacing, Maximum	63 inches

(1) All structural components shall be designed to withstand, without damage or permanent distortion, the maximum head differential specified (full screen blinding).

(2) Contractor shall field verify elevation.

(3) Each screen shall be designed for maximum flow conditions.

D. Screening equipment shall be designed to run continuously, without operator supervision. Screen cleaning system shall be front cleaning and front return design, to prevent the potential of “carry-over” of screenings material.

E. Debris collected on the bars shall be lifted above deck level by multiple link-mounted scrapers and debris blades. The screenings shall be discharged to a chute connected to the head frame. The chute shall discharge via gravity to the concrete deck located on the downstream side of the screen. The screen shall consist essentially of the frame, screen field, dead plate, rake assembly (link system, scrapers, debris blades, drive unit, bearing),

gearbox, screen drive, local controls and appurtenances specified or otherwise required for a complete and properly operating installation.

F. Service: storm water

2.03 SYSTEM COMPONENTS

A. Frame:

1. Framework of screen shall be constructed of Type 316 stainless steel bent plate with minimum of 3/16” cross section. Horizontal members shall be stainless steel bent plate or stainless-steel pipe. The side frames shall be connected to the support frames. The support frames shall be securely anchored to the operating floor. A Type 316 stainless steel channel bottom plate shall be an integral part of the bar screen assembly to fully engage scrapers in the bar screen at the base of the unit and assure that the raking mechanism reaches the bottom of the screen to prevent debris accumulation. The minimum bottom plate thickness shall be 3/16". No braces, gussets or stiffeners shall be inside the Screen Frame that will allow for screenings to collect.

2. All parts shall be designed and manufactured to handle the forces that may be exerted on the screen during fabrication, shipping, erection, and proper operation according to the Operation and Maintenance Manual. All components shall be so designed that jamming at any point will not result in structural failure but will cause the drive motor to stall. All components, including the gear reducer, shall be designed to withstand, without damage or permanent distortion, the full stalling torque of the drive motor.

3. Frame width and height shall be customized to fit the specified channel dimensions, discharge height, and hydraulic force requirements.

4. The unit shall be supported and anchored on the operating floor and rest on the bottom of the channel. Additional “mid-level” supports shall be provided within the screen channel, as required. Field welding of stainless-steel supports is prohibited.

5. Bolts and nuts shall be of Type 316 stainless steel. Anchor bolts shall be a minimum 1/2" diameter Type 316 stainless steel adhesive type furnished by the Contractor. Anti-galling compound shall be used to assemble all stainless-steel nuts, bolts and fasteners.

6. Link slide assembly shall be provided per manufacturer standard design and shall be constructed of UV Stable UHMW PE rollers and Type 316 stainless steel supports and components.

7. Screen shall not have enclosure or covers.

B. Screenfield and Deadplate:

1. Screen bars shall be constructed of Type 316 stainless steel and be rectangular shaped with minimum dimensions of 0.375-inch x 2.0 inch welded to horizontal support members as a part of the bar screen assembly.

2. The screen field shall be accurately constructed to give a clear opening of 2 inches between the bars. There shall be no space wider than the opening between the bars which would permit passage of larger solids through the screen.

3. Dead plate of Type 316 stainless steel plate (minimum thickness is 3/16") shall be flat and true; span the entire width of the unit; transition from bar screen and extend to the discharge point. The back side of the dead plate shall be constructed to guarantee a maximum gap between rake bar and dead plate, leading to the discharge chute without interruption

C. Screen Cleaning:

1. The equipment shall have multiple scrapers on the bar screen at one time cleaning continuously from bottom to top, the entire width of the bar screen. Units which have single raking arms or that require cycle times shall not be allowed.

2. Manufacturer's equipment shall have a head sprocket only, with no sprockets, bearings, idlers, or similar drive components under water to trap the chain. Equipment featuring reciprocating rake arms or lower bearings/sprockets/tracks below the water is not acceptable.

3. The link system shall be stainless steel castings and have a minimum ultimate strength of 60,000 lbs with a minimum cross section of 1-1/2 inches and weighing a minimum of 4.5 lbs each. Links and pins shall be constructed of Type 316 stainless steel material. Retaining rings shall be constructed of Type 316 stainless steel. Link system shall have a 1,000-pound lifting capacity.

4. Scrapers / rakes shall be a minimum of 0.75 inches thick UV Stable UHMW-PE and shall penetrate the bar screen a minimum of 1.00 inches.

5. A Type 316 stainless steel and UV Stable UHMW-PE debris blade assembly, which does not require a separate drive, shall be installed to assist in removing debris from the scraper on the mechanically cleaned bar screen unit as recommended by the manufacturer.

6. Return guide/Closeouts shall be Type 316 stainless steel and shall assure proper alignment of scrapers as they enter the bar screen and assure that there is no space wider than the clear opening between bars to prevent passage of larger solids than allowed through the screen.

7. Screenings transported to the top of the screen shall be discharged positively by means of a scraper mechanism to the discharge chute. Cleaning mechanisms that utilize shock absorbers, springs, or other dampening or hydraulic actuators are unacceptable.

8. A discharge chute shall be provided for each screen to divert screenings discharged from the screen to the concrete deck. The discharge chute shall be constructed of

Type 316 stainless steel with a minimum thickness of 11 Gauge (0.12”). The discharge chute shall be bolted to the dead plate.

D. Drive Mechanism:

1. Each mechanically cleaned bar screen unit shall operate independently and shall have its own drive unit and components. The drive unit shall be located at the top of the mechanically cleaned bar screen.

2. The drive mechanism for the rakes shall incorporate a solid shaft constructed of Type 316 stainless steel. The drive output shaft rotation shall be constant and in one direction in order to reduce maintenance and increase product life.

3. Drive sprockets and end castings shall be Type 316 stainless steel.

E. Bearings shall be greased ball bearing type, non-self-aligning, sealed and lubricated and shall be designed for continuous heavy duty loads and for both axial and radial thrust loads. Bearings shall have a minimum ABMA L-10 life of 100,000 hours under worst possible operating conditions

F. Speed Reducer: Speed reducers shall be double reduction, cycloidal style and shall comply with all applicable AGMA standards. Speed reducers shall be fully enclosed in a weatherproof casing. Reducers shall have ball or roller bearings throughout with all moving parts immersed in oil. Shafts shall be of high strength alloy steel ground to required tolerances. All ball or roller bearings shall have a minimum ABMA L-10 life of 100,000 hours. At least one bearing on each shaft shall be of the combined radial and thrust type.

G. Motors:

1. Each screen shall be direct connected to an AC motor. The screen motors shall comply with the requirements of section 16480 – Low Voltage Electric Motors.

2. Screen motors shall be capable of meeting all loads over the entire operating speed range without exceeding the name plate horsepower rating of the motor. Motors shall be 1/4-HP, 1800-RPM, 3-Phase, 60-Hertz, 460 Volt AC, inverter duty rated. Motor enclosures shall be TEFC, washdown rated. Insulation shall be Class H, with Class B temperature rise. Furnish with motor winding temperature switches and space heaters.

H. Coatings:

1. All non-stainless bar screen components shall be coated in strict accordance with Division 9 and manufacturer’s requirements.

2. Surface Preparation shall be done in accordance with SSPC-SP-10 Near White. The three-part coating system shall be manufactured by Tnemec or equal as follows: Prime Coat Series 90-97 Tneme Zinc at 2.5-3.5 mils DFT, Intermediate Coat Series 27 F.C. Typoxy at 3.0-5.0 mils DFT, and Top Coat Series 1075U Endura-Shield II at 2.0-3.0 mils DFT. Standard color is 11SF Safety Blue. Material shall meet all state and federal VOC and other regulatory requirements.

2.04 ELECTRICAL AND CONTROL REQUIREMENTS

A. All rigid conduit and fittings furnished by the equipment manufacturer shall be rigid aluminum, copper free. Flexible conduit, where used, shall be liquid tight, PVC coated, flexible metal conduit. Termination fittings for flexible conduit shall be 316 stainless steel. All mounting hardware shall be stainless steel.

B. Each mechanically cleaned bar screen shall be provided with a local control station (LCS) for installation at the equipment. Each LCS shall include the following features:

1. Cast aluminum construction with NEMA 4X rating suitable for outdoor installation.

2. Momentary START/STOP pushbuttons, “jog reverse” hand switch and a maintained-type mushroom-head emergency stop button.

C. Screen vendor shall furnish a local control panel (LCP) for controlling both screens. LCP shall contain the following features:

1. Enclosure shall be NEMA 12 with ANSI 61 gray finish. LCP shall be supplied with a flange mounted disconnect switch, main circuit breaker and thermostat controlled exhaust fan/louver package for heat dissipation. Power supply to panel shall be 480VAC, three phase, 60Hz AC.

2. A variable frequency drive (VFD) shall be provided in the screen control panel for control of the screen belt drive system. VFD shall be an Allen Bradley PowerFlex 40 by Rockwell Automation or equivalent by Schneider Electric, ABB or Engineer approved equal.

3. Design of the control panel shall be with 120VAC components with source from control power transformer within control panel. Provide NEMA rated components, with the exception of terminal strips.

4. Provide the following front panel devices, at a minimum: Local / Off / Remote selector switch, Local Manual / Auto selector switch, Start and Stop pushbuttons and panel mounted VFD keypad/display (display will indicate elapsed time run). All indicating lamps shall be LED with push-to-test design. Refer to Contract Drawings for lamp colors.

a. Front panel monitoring indications shall include, at a minimum:

(1) Control power on;

(2) Screen Running;

(3) VFD fault;

(4) Emergency stop button and indication;

(5) VFD Speed (indication on the VFD display);

(6) Channel Low Level.

b. These devices, with the exception of the VFD keypad/display, may be incorporated into a small panel-mounted operator interface terminal (OIT), at the discretion of the vendor.

5. Discrete Inputs (dry contact):

   a. Remote Start (from PLC-SS12)

   b. Remote Stop (from PLC-SS12)

   c. Channel Low (Float Switch by Div. 17)

   d. Channel High (Float Switch by Div. 17)

6. Discrete Outputs:

   a. Running (to PLC-SS12)

   b. VFD Fault (to PLC-SS12)

   c. In Remote (to PLC-SS12)

   d. E-stop (to PLC-SS12)

7. Analog Outputs (4-20mA)

   a. VFD Speed Control (from PLC-SS12)

8. Analog Input (4-20mA)

   a. VFD Speed (to PLC-SS12)

9. All accessories and appurtenances required for a complete and operational system shall be provided.

10. System shall be factory assembled and tested prior to shipment.

2.05 SCREEN CONTROL OPERATIONS

A. When the Local/Off/Remote selector switch on the LCP is in the Local position, the screen shall be controlled locally in two modes:

   1. Local Auto Mode: with the LCP Local Manual/Auto selector switch in the Auto mode, the VFD keypad can select the unit to control in a local auto mode.

   2. Local Manual mode: with the LCP Manual/Auto selector switch in the manual mode, the LCS controls the VFD locally at a pre-set speed.

B. When the Local/Off/Remote selector switch on the LCP is in the Off position, the screen shall not run.

C. When the Local/Off/Remote selector switch on the LCP is in the Remote position, the screen shall be controlled by the PLC-SS12. The City's SCADA HMI screen shall have an

On/Off/Auto (OOA) software selector switch which enables the screens to operate as follows:

a. When the OOA selector switch is in the off position, the screen shall not run.

b. When the OOA selector switch is in the On position, the screen can be started and stopped from the SCADA HMI Screen or local touchscreen on the LCP and will run the screen continuously in the forward direction at the pre-set speed.

c. When the OOA selector switch is in the Auto position, PLC-SS12 shall control the screens according to the automatic operation described below.

D. Automatic Operation:

1. When a water depth of 2-ft (adjustable parameter) is detected within the screen channel by the existing PLC-SS12 via the ultrasonic level detector, the screen shall operate continuously at an adjustable high preset speed, as set in the screen's VFD.

2. When a high channel level (adjustable) is detected from the level signal, the screen shall automatically ramp down to a low preset speed (adjustable parameter), as set in the VFD. The screen shall continue to run at low speed until the high level has subsided and at this time the screen shall resume its high-speed operation.

3. When a water depth of less than 2-ft (adjustable parameter) is detected within the screen channel by the existing PLC-SS12 via the ultrasonic level detector, the screen shall be stopped.

4. A secondary means of operating the screens shall be with the use of cycle timer. Screen run time (adjustable parameter) is normally followed by a wait time (adjustable parameter).

2.06 INSTALLATION HARDWARE:

A. The Contractor shall provide such mounting hardware as necessary for installation of the screen equipment. This shall include, but not be necessarily limited to: adhesive anchors of Type 316 stainless steel; nuts and bolts; conduit and wiring as required by the service.

2.07 SPARE PARTS

A. The following spare parts shall be supplied with the delivery of the screens:

1. One (1) Drive Clevis Pin

2. Four (4) Link Clevis Pins

3. Ten (10) Snap/Retaining Rings and Tool

4. Four (4) Scraper Nuts

5. Four (4) Scraper Bolts

6. One (1) Snap Ring Tool

7. One (1) “Never Seez” Lubricant (3 oz. Tube) or equal

8. Two-year supply of all recommended lubricants

PART 3 - EXECUTION

3.01 MANUFACTURER’S FIELD SERVICES

A. The services of a qualified manufacturer’s technical representative shall be provided in accordance with Section 11000. Field services shall include the following site visits:

One (1) trip of one (1) day for installation and testing

One (1) trip of one (1) day for startup and training

3.02 INSTALLATION:

A. Equipment shall be installed in strict conformance with the manufacturer’s installation instructions.

B. Equipment shall be erected in a neat and workmanlike manner on the foundations at the locations and elevations shown on the Drawings.

C. All equipment sections and loose items shall be match-marked prior to shipping.

D. After alignment is correct, grout using high grade non-shrink grout.

E. The Contractor shall furnish oil and grease for initial operation and testing. The manufacturer and grades of oil and grease shall be in accordance with the recommendations of the equipment manufacturer.

F. Field welding of stainless steel is prohibited.

3.03 STORAGE AND HANDLING OF EQUIPMENT AND MATERIALS:

A. Storage and handling of equipment and materials shall be as specified in Section 01600 and Section 11000.

3.04 FIELD TESTING:

A. Field testing shall be conducted as specified in Sections 01660, 11000 and with the following additional requirements.

B. Final acceptance tests shall demonstrate the following:

1. The screens have been properly installed and are in proper alignment.

2. The screens meet the specified operating conditions.

C. Make all adjustments necessary to place equipment in specified working order at time of above tests.

3.05 FIELD TOUCH-UP PAINTING:

A. After installation and accepted testing by the Engineer, apply touch-up paint to all scratched, abraded and damaged shop painted surfaces. Coating type and color shall match shop painting.

- END OF SECTION -

DIVISION 12 – FURNISHINGS (NOT USED)

DIVISION 13 – SPECIAL CONSTRUCTION (NOT USED)

SECTION 15000

BASIC MECHANICAL REQUIREMENTS

PART 1 -- GENERAL

1.01 THE REQUIREMENT

A. The CONTRACTOR shall furnish and install to the required line and grade, all piping together with all fittings and appurtenances, required for a complete installation. All piping located outside the face of structures or building foundations and all piping embedded in concrete within a structure or foundation shall be considered exterior piping.

B. The CONTRACTOR shall furnish and install fittings, couplings, connections, sleeves, adapters, harness rods and closure pieces as required to connect pipelines of dissimilar materials and/or sizes herein included under this Section and other concurrent Contracts for a complete installation.

C. The CONTRACTOR shall furnish all labor, materials, equipment, tools, and services required for the furnishing, installation and testing of all piping as shown on the Drawings, specified in this Section and required for the Work. Piping shall be furnished and installed of the material, sizes, classes, and at the locations shown on the Drawings and/or designated in this Section. Piping shall include all fittings, adapter pieces, couplings, closure pieces, harnessing rods, hardware, bolts, gaskets, wall sleeves, wall pipes, hangers, supports, and other associated appurtenances for required connections to equipment, valves, or structures for a complete installation.

D. Piping assemblies under 4-inch size shall be generally supported on walls and ceilings, unless otherwise shown on the Drawings or ordered by the ENGINEER, being kept clear of openings and positioned above "headroom" space. Where practical, such piping shall be run in neat clusters, plumb and level along walls, and parallel to overhead beams.

E. The CONTRACTOR shall provide taps on piping where required or shown on the Drawings. Where pipe or fitting wall thicknesses are insufficient to provide the required number of threads, a boss or pipe saddle shall be installed.

F. The work shall include, but not be limited to, the following:

1. Connections to existing pipelines.

2. Test excavations necessary to locate or verify existing pipe and appurtenances.

3. Installation of all new pipe and materials required for a complete installation.

4. Cleaning, testing and disinfecting as required.

1.02 RELATED WORK SPECIFIED ELSEWHERE

A. Division 1 – General Requirements

B. Division 2 – Sitework

C. Division 5 – Metals

D. Division 9 – Finishes

E. Division 11 – Equipment

F. Division 16 – Electrical

1.03 MATERIAL CERTIFICATION AND SHOP DRAWINGS

A. The CONTRACTOR shall furnish to the CITY (through the ENGINEER) a Material Certification stating that the pipe materials and specials furnished under this Section conform to all applicable provisions of the corresponding Specifications. Specifically, the Certification shall state compliance with the applicable standards (ASTM, AWWA, etc.) for fabrication and testing.

B. Shop Drawings for major piping (2 inches in diameter and greater) shall be prepared and submitted in accordance with the Section entitled “Submittals.” In addition to the requirements of the Section entitled “Submittals,” the CONTRACTOR shall submit laying schedules and detailed Drawings in plan and profile for all piping as specified and shown on the Drawings.

C. Shop Drawings shall include, but not be limited to, complete piping layout, pipe material, sizes, class, locations, necessary dimensions, elevations, supports, hanger details, pipe joints, and the details of fittings including methods of joint restraint. No fabrication or installation shall begin until Shop Drawings are approved by the ENGINEER.

PART 2 -- PRODUCTS

2.01 GENERAL

A. All specials and every length of pipe shall be marked with the manufacturer's name or trademark, size, class, and the date of manufacture. Special care in handling shall be exercised during delivery, distribution, and storage of pipe to avoid damage and unnecessary stresses. Damaged pipe will be rejected and shall be replaced at the CONTRACTOR's expense. Pipe and specials stored prior to use shall be stored in such a manner as to keep the interior free from dirt and foreign matter.

B. Testing of pipe before installation shall be as described in the corresponding ASTM or AWWA Specifications and in the applicable standard specifications listed in the following sections. Testing after the pipe is installed shall be as specified in the Section entitled “Pipeline Testing and Disinfection”.

C. All buried exterior piping shall have restrained joints for thrust protection unless otherwise specified or shown on the drawings. All exposed exterior piping shall have flanged joints, unless otherwise specified or shown on the drawings.

D. The CONTRACTOR shall verify existing above ground and buried piping tie-in connections before fabricating new piping assemblies. The CONTRACTOR shall verify size, type, and location of all existing buried piping and appurtenances by excavating test pits as required of all buried connections and crossings which may affect the CONTRACTOR's work prior to ordering pipe and fittings to determine sufficient information for ordering materials. The CONTRACTOR shall take whatever measurements that are required to complete the work as shown or specified.

E. Before setting wall sleeves, pipes, castings and pipes to be cast in place, the CONTRACTOR shall check the Drawings and equipment manufacturer's drawings which may have a direct bearing on the pipe locations.

F. Piping shall be attached to pumps, valves, equipment, etc., in accordance with the respective manufacturers' recommendations. This includes the use of flexible connectors as required.

G. All changes in directions or elevations shall be made with fittings, unless otherwise shown.

2.02 WALL PIPES

A. Where wall sleeves or wall pipes occur in walls that are continuously wet on one or both sides, they shall have water stop flanges at the center of the casting or as shown on the Drawings. Ends of wall pipes shall be flange, mechanical joint, plain end, or bell as shown on the Drawings, or as required for connection to the piping. Wall pipes shall be of the same material as the piping that they are connected to. If welded waterstop flanges are employed, welds shall be 360 degree continuous on both sides of flange. Unless otherwise shown on the Drawings, waterstop flanges shall conform to the minimum dimensions shown below:

Pipe Size	Waterstop Flange Diameter	Waterstop Flange Thickness
4 inch - 12 inch	OD + 3.10 inch	0.50 inch
14 inch - 24 inch	OD + 4.15 inch	0.75 inch
30 inch - 36 inch	OD + 4.50 inch	1.00 inch
42 inch - 48 inch	OD + 5.00 inch	1.25 inch
54 inch	OD + 5.90 inch	1.50 inch

2.03 SLEEVES

A. Unless shown otherwise, all piping passing through walls and floors shall be installed in sleeves or wall castings accurately located before concrete is poured, or placed in position during construction of masonry walls. Sleeves passing through floors shall extend from the bottom of the floor to a point 3 inches above the finished floor, unless shown otherwise. Water stop flanges are required on all sleeves located in floors or walls which are continually wet or under hydrostatic pressure on one or both sides of the floor or wall.

B. Sleeves shall be cast iron, black steel pipe, or fabricated steel in accordance with details shown on the Drawings. If not shown on the Drawings, the CONTRACTOR shall submit to

the ENGINEER the details of sleeves the CONTRACTOR proposes to install; and no fabrication or installation thereof shall take place until the ENGINEER's approval is obtained. Steel sleeves shall be fabricated of structural steel plate in accordance with the standards and procedures of AISC and AWS. Steel sleeve surfaces shall receive a commercial sandblast cleaning and then be shop painted in accordance with Section 09900 – Painting.

C. When shown on the Drawings or otherwise required, the annular space between the installed piping and sleeve shall be completely sealed against a maximum hydrostatic pressure of 20 psig. Seals shall be mechanically interlocked, solid rubber links, trade name "Link-Seal", as manufactured by the Thunderline Corp., Wayne, Michigan, or equal. Rubber link, seal-type, size, and installation thereof, shall be in strict accordance with the manufacturer's recommendations. For non-fire rated walls and floors, pressure plate shall be glass reinforced nylon plastic with EPDM rubber seal and 304 stainless steel bolts and nuts. For fire rated walls and floors, two independent seals shall be provided consisting of low carbon steel, zinc galvanized pressure plates, silicon rubber seals and low carbon steel, zinc galvanized bolts and nuts.

D. Cast iron mechanical joint adapter sleeves shall be Clow # 1429, as manufactured by the Clow Corp., or equal. Mechanical joint adapter sleeves shall be provided with suitable gasket, follower ring, and bolts to effect a proper seal. In general, sleeves installed in walls, floors, or roofs against one side of which will develop a hydrostatic pressure, or through which leakage of liquid will occur, shall be so sealed. If welded waterstop flanges are employed, welds shall be 360 degree continuous on both sides of flange.

2.04 SOLID SLEEVE COUPLINGS

A. Solid sleeve couplings shall be used to connect buried service piping where shown on the Drawings. Solid sleeves shall be ductile iron, long body and shall conform to the requirements of ANSI A21.10 (AWWA C110). Unless otherwise shown or specified, solid sleeve couplings shall be Style A11760 as manufactured by American Cast Iron Pipe Co., or equal.

2.05 FLEXIBLE COUPLINGS

A. Flexible couplings shall be as manufactured by the Red Valve Company or equal and shall consist of a molded reinforced fabric of cotton and natural rubber. Galvanized steel retaining rings shall be furnished. End connections shall match ANSI 125 pound flanges with a minimum pressure rating of 140 psi.

2.06 SLEEVE TYPE COUPLINGS

A. Sleeve type, flexible couplings shall be furnished and installed where shown on the Drawings or otherwise required to resist internal operating pressures. In addition to that specified herein, harnessed, sleeve type flexible couplings shall be provided on all exposed pipe 3 inches and larger in diameter that spans any expansion joint in a building or structure.

B. Materials shall be of high strength steel and couplings shall be rated for the same pressures as the connecting piping.

C. Gaskets shall be rubber. Bolts and nuts shall be alloy steel, corrosion-resistant and prime coated.

D. Couplings shall be shop primed with a premium quality primer compatible with the painting system specified in Section 09900 - Painting. Field painting of wetted area shall be done prior to installation.

E. Harnessing

1. Harness couplings to adjacent flanges as shown, specified or otherwise required to restrain all pressure piping.

2. Dimensions, sizes, spacing and materials for lugs, tie rods, washers, and nuts shall conform to the standards for the pipe size, and design pressure specified.

3. No less than two (2) bolts shall be furnished for each coupling.

4. Tie bolts, nuts and washers shall be ASTM A 193, Grade B7 steel or better and as a minimum shall be hot dip galvanized.

5. Harness rods shall have lengths less than 10 feet between adjacent flanged joints on fittings and as a minimum shall be hot dip galvanized.

F. Couplings shall be as manufactured by Dresser Industries, Style 38, or equal as required and shown on the Drawings. All couplings shall be provided without interior pipe stop.

2.07 FLANGED ADAPTERS

A. Flanged adapters shall be furnished as required and as shown on the Drawings.

B. All flanged adapters, 12 inches in diameter and smaller, except as shown on the Drawings or directed by the ENGINEER, shall be locking type flanged adapters.

C. Pressure and service shall be the same as connected piping.

D. Materials shall be cast iron for pipes up to 12 inch diameter and high strength steel for pipes larger than 12 inch diameter.

E. Flanged adapters shall be shop primed with a premium quality primer compatible with the paint system specified in Section 09900 – Painting. Field painting of wetted area shall be done prior to installation.

F. Bolts and nuts shall be alloy steel, corrosion-resistant and prime coated.

G. Where identified on the Drawings, flanged coupling adapters shall be harnessed by tying the adapter to the nearest pipe joint flange using threaded rods and rod tabs. The threaded rods, rod tabs, nuts, bolts and washers shall be as shown on the Drawings and as a minimum shall be hot dip galvanized.

H. Flanged adapters shall be as manufactured by Dresser Industries, Style 127 or 128, Smith Blair Corporation, or equal.

2.08 MECHANICAL COUPLINGS (SPLIT TYPE – GROOVED PIPE)

A. Mechanical couplings (split type-grooved pipe) shall be furnished as specified or shown on the Drawings.

B. Materials shall be of ductile iron and couplings shall be rated for 150 psi or higher.

C. Gaskets shall be rubber of the type recommended by the manufacturer for the specified service. Bolts and nuts shall be heat treated carbon steel track bolts and shall be plated.

D. The exterior service of couplings shall be painted in accordance with Section 09900 - Painting.

E. Couplings shall be as manufactured by Victaulic Company of America, Style 31 for ductile iron pipe, Style 77 for IPS steel pipe, or equal, unless otherwise specified.

2.09 UNIONS

A. For ductile iron, carbon steel, and grey cast iron pipes assembled with threaded joints and malleable iron fittings, unions shall conform to ANSI B16.39.

B. For copper piping, unions shall have ground joints and conform to ANSI B16.18.

C. For PVC and CPVC piping, unions shall be socket weld type with Viton O-ring.

2.10 THERMOPLASTIC TUBING AND FITTINGS

A. Thermoplastic tubing shall be manufactured from polyallomor tubing. Tubing shall be protected from ultraviolet radiation degradation with a black coating or integral color conforming to ASTM D-1248, Type 1, Class C, Category 3. Fittings and connectors used with thermoplastic tubing shall be the flareless tube type constructed of brass conforming to SAE CA377, SAE CA360 or equal. Brass sleeves shall be used.

B. Assembly of the thermoplastic tubing shall consist of pushing the tubing into the fitting and hand tightening the nut with final tightening with a wrench. Care shall be taken not to overtighten the nut. Plastic tube racks and bend holders shall be provided for holding the tubing in position. Needle valves used with thermoplastic tubing shall be the globe type constructed with a brass body, stem and seat and Buna-N "O"-ring seals. Installation shall be in accordance with the manufacturer's recommendations. Thermoplastic tubing, shall be the Impolene (polyallomor) system and needle valves, fittings and connectors shall be the Poly-Flo with 261 UB Universal Nut and Sleeve system as manufactured by Imperial Eastman, or equal.

PART 3 -- EXECUTION

3.01 INSTALLATION

A. All piping shall be installed by skilled workers and in accordance with the best standard practice for piping installation as shown on the Drawings, specified or recommended by the pipe manufacturer. Proper tools and appliances for the safe and convenient handling and installing of the pipe and fittings shall be used. Great care shall be taken to prevent any pipe coating from being damaged on the inside or outside of the pipe and fittings. All pieces shall be carefully examined for defects, and no piece shall be installed which is known to be cracked, damaged, or otherwise defective. If any defective pieces should be discovered after having been installed, it shall be removed and replaced with a sound one in a satisfactory manner by the CONTRACTOR and at their own expense. Pipe and fittings shall be thoroughly cleaned before they are installed and shall be kept clean until they are accepted in the complete work. All piping connections to equipment shall be provided with unions or coupling flanges located so that piping may be readily dismantled from the equipment. At certain applications, Dresser, Victaulic, or equal, couplings may also be used. All piping shall be installed in such a manner that it will be free to expand and contract without injury to itself or to structures and equipment to which it is connected. All piping shall be erected to accurate lines and grades with no abrupt changes in line or grade and shall be supported and braced against movement, temporary, or permanent. All exposed piping shall be installed with vertical and horizontal angles properly related to adjoining surfaces or pipes to give the appearance of good quality. Unless otherwise shown or approved, provided a minimum headroom clearance under all piping of 7 feet 6 inches.

B. Unless otherwise shown or specified, all waste and vent piping shall pitch uniformly at a 1/4-inch per foot grade and accessible cleanouts shall be furnished and installed as shown and as required by local building codes. Installed length of waste and vent piping shall be determined from field measurements in lieu of the Drawings.

C. All excavation shall be made in such a manner and to such widths as will provide ample room for properly installing the pipe and permit thorough compaction of backfill around the pipe. The minimum trench widths shall be in strict accordance with the "Trench Width Excavation Limits" as shown on the Drawings. All excavation and trenching shall be done in strict accordance with these specifications and all applicable parts of the OSHA Regulations, 29CFR 1926, Subpart P.

D. All excavation required by this contract shall be unclassified. No additional payment will be made for rock excavation required for the installation of pipe or structures shown on the drawings.

E. Enlargements of the trench shall be made as needed to give ample space for operations at pipe joints. The width of the trench shall be limited to the maximum dimensions shown on the Drawings, except where a wider trench is needed for the installation of and work within sheeting and bracing. Except where otherwise specified, excavation slopes shall be flat enough to avoid slides which will cause disturbance of the subgrade, damage to adjacent areas, or endanger the lives or safety of persons in the vicinity.

F. Hand excavation shall be employed wherever, in the opinion of the ENGINEER, it is necessary for the protection of existing utilities, poles, trees, pavements, or obstructions.

G. No greater length of trench in any location shall be left open, in advance of pipe laying, than shall be authorized or directed by the ENGINEER and, in general, such length shall be limited to approximately 100 feet. The CONTRACTOR shall excavate the trenches to the full depth, width and grade indicated on the Drawings including the relevant requirements for bedding. The trench bottoms shall then be examined by the ENGINEER as to the condition and bearing value before any pipe is laid or bedding is placed.

H. No pressure testing shall be performed until the pipe has been properly backfilled in place. All pipe passing through walls and/or floors shall be provided with wall pipes or sleeves in accordance with the specifications and the details shown on the Drawings. All wall pipes shall be of ductile iron and shall have a water stop located in the center of the wall. Each wall pipe shall be of the same class, thickness, and interior coating as the piping to which it is joined. All buried wall pipes shall have a coal tar outside coating on exposed surfaces.

I. Joint deflection shall not exceed 75 percent of the manufacturers recommended deflection. Excavation and backfilling shall conform to the requirements of Division 2, and as specified herein. Maximum trench widths shall conform to the Trench Width Excavation Limits shown on the Drawings. All exposed, submerged, and buried piping shall be adequately supported and braced by means of hangers, concrete piers, pipe supports, or otherwise as may be required by the location.

J. Following proper preparation of the trench subgrade, pipe and fittings shall be carefully lowered into the trench so as to prevent dirt and other foreign substances from gaining entrance into the pipe and fittings. Proper facilities shall be provided for lowering sections of pipe into trenches. Under no circumstances shall any of the materials be dropped or dumped into the trench.

K. Water shall be kept out of the trench until jointing and backfilling are completed. When work is not in progress, open ends of pipe, fittings, and valves shall be securely closed so that no water, earth, or other substance will enter the pipes, fitting, or valves. Pipe ends left for future connections shall be valved, plugged, or capped, and anchored as required.

L. All piping shall be installed in such a manner that it will be free to expand and/or contract without injury to itself or to structures and equipment to which it is connected. All piping shall be erected to accurate lines and grades with no abrupt changes in line or grade and shall be supported and braced against movement, temporary, or permanent. All exposed piping shall be installed with vertical and horizontal angles properly related to adjoining surfaces or pipes to give the appearance of good quality. Pipes crossing within a vertical distance of less than or equal to one (1) foot shall be encased and supported with concrete at the point of crossing to prevent damage to the adjacent pipes as shown on the Drawings.

M. The full length of each section of pipe shall rest solidly upon the bed of the trench, with recesses excavated to accommodate bells, couplings, joints, and fittings. Before joints are made, each pipe shall be well bedded on a solid foundation; and no pipe shall be brought into position until the preceding length has been thoroughly bedded and secured in place. Pipe that has the grade or joint disturbed after laying shall be taken up and relaid by the CONTRACTOR at their own expense. Pipe shall not be laid in water or when trench conditions are unsuitable for work.

N. Proper and suitable tools and appliances for the safe convenient handling and laying of pipe shall be used and shall in general agree with manufacturer's recommendations.

O. At the close of each work day the end of the pipeline shall be tightly sealed with a cap or plug so that no water, dirt, or other foreign substance may enter the pipeline, and this plug shall be kept in place until pipe laying is resumed.

P. During the laying of pipe, each pipe manufacturer shall provide their own supervisor to instruct the CONTRACTOR's pipe laying personnel in the correct procedure to be followed.

Q. Ordinarily only full lengths of pipe (as furnished by the pipe manufacturer) shall be used exceptions: closure pieces at maintenance holes and areas where joint deflection is required.

R. For gravity sewer installations, the CONTRACTOR shall use a laser device to maintain the trench and pipe alignment. The laser device shall be re-checked for correct elevation and pipe alignment prior to pipe installation if the device is left in the pipe overnight. Corrected invert elevations at each maintenance hole and any adjustments will be coordinated and approved by the ENGINEER.

S. All piping shall have type "a" bedding as shown on the drawings, unless otherwise specified herein or indicated on the drawings.

3.02 REINFORCED CONCRETE PIPE, CONCRETE CULVERT, AND DRAIN PIPE

A. The laying of reinforced concrete pipe shall conform to the applicable sections of the Concrete Pipe Handbook as published by the American Concrete Pipe Association.

3.03 DUCTILE IRON PIPE

A. Ductile iron pipe (DIP) shall be installed in accordance with the requirements of the Ductile Iron Pipe Handbook published by the Ductile Iron Pipe Research Association, and AWWA C600.

B. Where it is necessary to cut ductile iron pipe in the field, such cuts shall be made carefully in a neat professional manner using approved methods to produce a clean square cut. The outside of the cut end shall be conditioned for use by filing or grinding a small taper, at an angle of approximately 30 degrees.

C. UNLESS OTHERWISE APPROVED BY THE ENGINEER, FIELD WELDING OF DUCTILE IRON WILL NOT BE PERMITTED.

3.04 PVC/CPVC AND HDPE PIPE

A. Polyvinyl chloride (PVC), chlorinated polyvinyl chloride (CPVC) and High Density Polyethylene (HDPE) pipe shall be laid and joints assembled according to the respective manufacturer's recommendation. PVC pipe installation shall comply with applicable sections of the Uni-Bell PVC Pipe Association Recommended Standard Specifications.

B. Plastic piping shall not be installed when the temperature is less than 60 degrees F except as otherwise recommended by the manufacturer and approved by the ENGINEER.

3.05 CARBON AND STAINLESS STEEL PIPE

A. Installation of steel pipe shall be by skilled workers and shall conform to the applicable sections of AWWA Manual M-11. Joints for steel piping shall be either screwed, welded, or flanged as shown on the Drawings or as specified.

B. Welding in the field shall be performed only when requested on the shop drawings and permitted by the ENGINEER for carbon steel pipe. No welding of stainless steel pipe shall be allowed in the field. All field welds shall be radiographically inspected.

C. Installation of the steel casing pipe shall be by skilled workers and in accordance with the best standard practice for steel pipe installation. Joints for steel casing pipe shall be butt welded.

1. The boring equipment to be used for installing the jacked casing shall be of such size and capacity to allow the boring to proceed in a safe and expeditious manner. The installation of the casing and boring of the hole shall be done simultaneously to avoid cave-ins or settlement and for safety of traffic above.

2. The CONTRACTOR shall check the vertical and horizontal alignment of the casing by survey instrument at least once during each four feet of advance, or as directed by the ENGINEER. Pits shall be well sheeted and braced as necessary for safe and adequate access for workers, inspectors and materials and shall be of a size suitable to equipment and material handling requirements.

3. Under no conditions shall jetting or wet boring of encasement under pavement be allowed.

4. After installation of the carrier pipe, each end of the casing pipe shall be made watertight with a brick masonry bulkhead. In addition, a Class B concrete cradle shall be provided from each end of the bulkhead to the first pipe joint outside of the bulkhead.

3.06 COPPER PIPE

A. Installation of copper pipe shall be by skilled workers in accordance with the manufacturer's recommendations. Use teflon tape at all fittings unless otherwise required for intended service. Install unions at the connections to each piece of equipment to allow removal of equipment without dismantling connecting piping.

B. Wall sleeves shall be provided for all piping passing through exterior walls and shall be of the same material as the piping to which it is joined. All wall sleeves shall be provided with an acceptable waterstop.

C. The CONTRACTOR shall provide hot and cold water mains with branches and risers complete from point indicated on the Drawings running to all fixtures and other outlets indicated. Mains and branches shall be run generally as shown on the Drawings. The

CONTRACTOR shall provide all interior water piping, branches, and risers as shown on the Drawing and shall make connections to all plumbing fixtures, hose bibs, wall hydrants, and other points requiring water under this and other Divisions of the Specifications.

D. All water mains and branches shall be pitched at least one (1) inch in twenty-five (25) feet toward fixtures. The piping installation shall be arranged so that the entire system can be drained through fixture supply connections.

E. Unions shall be installed at the connections to each piece of equipment to allow for removal of equipment without dismantling connecting piping.

F. Joints 1-1/4 inches and larger shall be made with silver solder. For joints less than 1-1/4 inches and all valves (regardless of size) use 95/5 solder. Soldered joints shall be prepared with a non-corrosive paste flux in accordance with manufacturer's instructions. All joints shall be thoroughly cleaned with emery cloth and reamed out before assembly. Acid core solder will not be permitted.

3.07 JOINTS IN PIPING

A. Restrained joints shall be provided on all pipe joints as specified herein and shown on the Drawings. Restrained joints shall be made up similar to that for push-on joints.

B. Push-on joints include a single rubber gasket which fits into the bell end of the pipe. The gasket shall be wiped clean, flexed and then placed in the socket. Any bulges in the gasket which might interfere with the entry of the plain end of the pipe shall be removed. A thin film of lubricant shall be applied to the gasket surface which will come into contact with the spigot end of the pipe. The lubricant shall be furnished by the pipe manufacturer. The plain end of the pipe, which is tapered for ease of assembly, shall be wiped clean and a thick film of lubricant applied to the outside. The pipe shall be aligned and carefully entered into the socket until it just makes contact with the gasket. The joint assembly shall be completed by entering the pipe past the gasket until it makes contact with the bottom of the socket. The pipe shall be pulled "home" with an approved jack assembly as recommended by the pipe manufacturer. If assembly is not accomplished by reasonable force, the plain end shall be removed and the condition corrected.

C. Flanged joints shall be brought to exact alignment and all gaskets and bolts or studs inserted in their proper places. Bolts or studs shall be uniformly tightened around the joints. Where stud bolts are used, the bolts shall be uniformly centered in the connections and equal pressure applied to each nut on the stud. Pipes in all lines subject to temperature changes shall be cut short and cold sprung into place to compensate for expansion when hot.

D. Mechanical joints shall be made up with gaskets, glands and bolts. When a joint is to be made up, the bell or socket and plain end shall be cleaned and washed with a solution of mild soap in water; the gland and gasket shall be slid onto the plain end and the end then entered into the socket until it is fully "home" on the centering ring. The gasket shall then be painted with soapy water and slid into position, followed by the gland. All bolts shall be inserted and made up hand tight and then tightened alternately to bring the gland into position evenly. Excessive tightening of the bolts shall be avoided. All nuts shall be pulled up using a torque wrench which will not permit unequal stresses in the bolts. Torque shall

not exceed the recommendations of the manufacturer of the pipe and bolts for the various sizes. Care shall be taken to assure that the pipe remains fully "home" while the joint is being made. Joints shall conform to the applicable AWWA Specifications.

E. Threaded and/or screwed joints shall have long tapered full depth threads to be made with the appropriate paste or jointing compound, depending on the type of fluid to be processed through the pipe. All pipe up to, and including 1-1/2-inches, shall be reamed to remove burr and stood on end and well pounded to remove scale and dirt. Wrenches on valves and fittings shall be applied directly over the joint being tightened. Not more than three pipe threads shall be exposed at each connection. Pipe, in all lines subject to temperature changes shall be cut short and cold sprung into place to compensate for expansion when hot. Joints in all piping used for chlorine gas lines shall be made up with a glycerine and litharge cement. Joints in plastic piping (PVC/CPVC) shall be laid and joints made with compounds recommended by the manufacturer. Installation shall conform to the requirements of ASTM D2774 and ASTM D2855. Unions required adjacent to valves and equipment.

F. Soldered joints shall have the burrs removed and both the outside of pipe and the inside of fittings shall be thoroughly cleaned by proper tools recommended for that purpose. Flux shall be applied to both pipe and inside of fittings and the pipe placed into fittings and rotated to ensure equal distribution of flux. Joints shall be heated and solder applied until it shows uniformly around the end of joints between fitting and pipe. All joints shall be allowed to self-cool to prevent the chilling of solder. Combination flux and solder paste manufactured by a reputable manufacturer is acceptable. Unions required adjacent to valves and equipment.

G. Welded joints shall be made by competent operators in a first class professional quality manner, in complete accordance with ANSI B31.1 and AWWA C206. Welding electrodes shall conform to ASTM A233, and welding rod shall conform to ASTM A251. Only skilled welders capable of meeting the qualification tests for the type of welding which they are performing shall be employed. Tests, if so required, shall be made at the expense of the CONTRACTOR, if so ordered by the ENGINEER. Unions shall be required adjacent to valves and equipment.

H. Copper joints shall be thoroughly cleaned and the end of pipes uniformly flared by a suitable tool to the bevels of the fittings used. Wrenches shall be applied to the bodies of fittings where the joint is being made and in no case to a joint previously made. Dimensions of tubing and copper piping shall be in complete accordance with the fittings used. No flare joints shall be made on piping not suited for flare joints. Installations for propane gas shall be in accordance with NFPA 54 and/or 58.

I. Solvent or adhesive welded joints in plastic piping shall be accomplished in strict accordance with the pipe manufacturer's recommendations, including necessary field cuttings, sanding of pipe ends, joint support during setting period, etc. Care shall be taken that no droppings or deposits of adhesive or material remain inside the assembled piping. Solvent or adhesive material shall be compatible with the pipe itself, being a product approved by the pipe manufacturer. Unions are required adjacent to valves and equipment. Sleeve-type expansion joints shall be supplied in exposed piping to permit 1 inch minimum of expansion per 100 feet of pipe length.

J. Dielectric unions shall be installed wherever dissimilar metals are connected except for bronze or brass valves in ferrous piping. Unions shall be provided downstream of each valve with screwed connections. The CONTRACTOR shall provide screwed or flanged unions at each piece of equipment, where shown, and where necessary to install or dismantle piping.

K. Eccentric reducers shall be installed where air or water pockets would otherwise occur in mains because of a reduction in pipe size.

L. Joints in polypropylene and polyvinylidelene fluoride pipe shall be butt fusion weld. All butt welding shall follow the requirements of ASTM D-2657 and the manufacturer's recommendations.

3.08 PAINTING AND COLOR CODING SYSTEM

A. All exposed piping specified shall be color coded in accordance with the CITY's standard color designation system for pipe recognition and in accordance with the Section entitled “Piping and Equipment Identification Systems.” In the absence of a standard color designation system, the ENGINEER will establish a standard color designation for each piping service category from color charts submitted by the CONTRACTOR in compliance with the Section entitled “Painting.”

B. All piping specified in this Section shall be painted in accordance with the Section entitled “Painting,” except as follows:

1. Copper pipe.

2. Stainless steel pipe. Flanges and supports or hangers shall be painted.

- END OF SECTION -

SECTION 15006

DUCTILE IRON PIPE

PART 1 – GENERAL

1.01 THE REQUIREMENT

A. The Contractor shall furnish and install ductile iron pipe and all appurtenant Work, complete in place, all in accordance with the requirements of the Contract Documents.

1.02 RELATED WORK SPECIFIED ELSEWHERE

A. All applicable sections of the Contract Documents

1.03 REFERENCED SPECIFICATIONS, CODES, AND STANDARDS

A. Commercial Standards:

AWWA C104	Cement Mortar Lining for Ductile Iron Pipe and Fittings For Water.
AWWA C110	Ductile-iron and Gray-Iron Fittings.
AWWA C111	Rubber-Gasket Joints for Ductile-Iron Pressure Pipe and Fittings.
AWWA C150	Thickness design of ductile iron pipe.
AWWA C151	Ductile-iron Pipe, Centrifugally Cast, For Water.
AWWA C600	Installation of Ductile-Iron Water Mains and Their Appurtenances.

1.04 SUBMITTALS

A. Shop Drawings: The Contractor shall submit Shop Drawings of pipe and fittings in accordance with the requirements set forth in the Sections entitled “Basic Mechanical Requirements” and “Submittals.”

B. Contractor shall submit certification that all materials coming in contact with potable water comply with the requirements of NSF 61.

PART 2 – PRODUCTS

2.01 GENERAL

A. Pipe shall be centrifugally cast in metal molds or sand lined molds in accordance with AWWA C151 of grade 60-42-10 ductile iron. The above standard covers ductile iron pipe with nominal pipe sizes from three inches up to and including sixty-four inches in diameter. Working pressure shall be as specified herein.

B. Wall Thickness

1. Buried Pipe:

   a. 30 inch diameter and greater shall be Pressure Class 300.

   b. 24 inch diameter and smaller shall be Pressure Class 350.

2. Flanged Pipe: Pipe wall thickness of threaded pipe for a flanged pipe end shall be minimum special thickness Class 53 from 4-inch to 54-inch and/or minimum Pressure Class 350 for 60-inch to 64-inch diameter pipe in accordance with AWWA C115.

3. Grooved Pipe: Grooved coupling pipe shall be special thickness Class 54, or greater if required by pipe manufacturer. Pipe groove dimensions shall be for rigid joints unless otherwise indicated on the drawings.

C. Joints

1. Ductile iron pipe above grade shall be flanged.

2. All pipe and fittings below grade shall be restrained joint type.

3. Mechanical and push-on type joints shall be in accordance with AWWA C111.

4. Flanges for flanged pipe shall be in accordance with AWWA C115, shall be ductile iron, shall be rated at 250 psi maximum working pressure, and shall be similar to flange Class 125 per ASME B16.1. Where shown on the Drawings, pipe and fittings shall be furnished with flanges similar to flange Class 250 per ASME B16.1. Fittings shall be provided with flanges having a bolt circle and bolt pattern the same as the adjacent pipe and/or mechanical devices. Joint materials shall be ANSI sized and approved and shall consist of hot dip galvanized carbon steel bolts and nuts and full faced gaskets, unless otherwise specified.

5. No raised face flanges shall be used. The raised faces shall be milled flat.

6. Flange gaskets shall be full face Toruseal gaskets by American Cast Iron Pipe Co., or FLANGE-TYTE gaskets by U.S. Pipe, or equal. Gaskets shall be nominal 1/8” thick SBR rubber.

D. Restrained Joints

1. All ductile iron pipe and fittings below grade shall be restrained joint.

2. Manufactured Proprietary Restrained Joint Piping: Restrained joint pipe shall be as specified in the City of Fort Lauderdale Department of Sustainable Development Engineering Division Shop Drawing Submittals and Approved Utility Product List provided in Appendix B.

3. Restrained Mechanical Joint Fittings: All mechanical joint fittings, valves and appurtenances shall be restrained as described herein. Restrained joint fittings shall be mechanical joint fittings with restraint assemblies such as Stargrip by Star Pipe

Systems, Mega Lug by EBAA Iron, ONE LOK by Sigma, or approved equal. Manufacturers and model numbers shall be as specified in the City of Fort Lauderdale Department of Sustainable Development Engineering Division Shop Drawing Submittals and Approved Utility Product List provided in Appendix B. Use of this restraining system shall be approved by the Engineer for each application.

E. Fittings

1. General: Fittings shall be manufactured in accordance with AWWA C110 or the manufacturer's standard. Fittings shall be as specified in the City of Fort Lauderdale Department of Sustainable Development Engineering Division Shop Drawing Submittals and Approved Utility Product List provided in Appendix B.

2. Pressure Rating: 350 psi minimum working pressure for 4- to 24-inch fittings and 250 psi minimum working pressure for 30- to 64-inch fittings.

3. Materials: Fittings shall be ductile iron.

4. Joints - General: Fittings shall be either flanged, mechanical joint or manufactured proprietary restrained joint type as indicated on the Drawings and specified herein.

5. Flanged Joint Fittings: Above ground fittings shall be flanged.

6. Manufacturer Proprietary Restrained Joint Fittings: Unless otherwise indicated on the Drawings or specified herein, all below ground fittings 30 inches in diameter and greater shall be manufacturer proprietary restrained joint type.

7. Mechanical Joint Fittings: Underground ductile iron fittings 24 inches in diameter and less shall be mechanical joint type fittings.

F. Pipe Lining and Coating General: Pipe linings and coatings shall be as follows:

1. Buried Service: The piping manufacturer's standard asphaltic coating shall be applied prior to shipment to the exterior wall of buried pipe and fittings in accordance with AWWA C151.

2. Above Ground Piping and Exposed Piping within Underground Vaults: A coating of rust inhibitive primer, compatible with the coating system specified in the Section entitled "Painting," shall be applied to the pipe exterior prior to shipment for piping that is above ground and exposed piping within vaults. Primer for pipe used for potable water main applications shall be compliant with NSF Standard 61.

3. Cement-Mortar Lining: Pipe and fittings for potable water service shall be cement-lined and seal-coated in accordance with AWWA C104, Cement-Mortar Lining for Ductile-Iron Pipe and Fittings for Water.

4. Protecto 401 Ceramic Epoxy Lining: The interior of all ductile iron pipe and fittings for wastewater services shall be lined with an epoxy lining. The epoxy lining shall be Protecto 401 Ceramic Epoxy as manufactured by the Protecto Division of Vulcan Painters, Inc, or equal. All pipe and fittings shall be lined with a minimum dry film thickness of 40 mils, except for the gasket groove and spigot end up to six inches

back from the end of the spigot which shall be lined with ten mils of the material. All ductile iron pipe and fittings shall be checked for dry film thickness in accordance with the SSPC-PA2. Each pipe joint and fitting shall be marked with the date of application of the lining system and with its numerical sequence of application on that date. The pipe supplier shall furnish a certificate stating that lining applicator has complied with all specification requirements relative to the material, its application and inspection. Surface preparation, number of coats, application of the lining material and field touch-up shall be in strict accordance with the lining material manufacturer's recommendations. During the installation of the pipe, the lining material manufacturer shall provide the services of a field engineer to instruct and demonstrate to the Contractor's personnel, the procedure for the field touch-up of lining where field cuts and taps were required. Holiday inspection shall be conducted using test equipment described in American Water Works Association Standard, AWWA C210, Section 5.3.3.1. In accordance with coating manufacturer's recommendation, holiday testing may be conducted any time after the coating has reached sufficient cure.

5. Polyethylene Encasement: All ductile iron pipe, fittings and valves installed underground shall be encased with polyethylene film in accordance with ANSI Standard A21.5, Method A or B at the Contractor’s option. Encasement shall terminate 3-inches to 6-inches above ground where pipe is exposed.

PART 3 – EXECUTION

3.01 INSTALLATION

A. The Contractor shall perform all earthwork including excavation, backfill, bedding, compaction, sheeting, shoring and bracing, dewatering and grading in accordance with Division 2 - Sitework.

B. Unless otherwise directed, ductile iron pipe shall be laid with the bell ends facing upstream in the normal direction of flow and in the direction of laying.

C. Thrust restrained and mechanical joints shall be made in accordance with the manufacturer's standards except as otherwise specified herein. Joints between mechanical joint pipe and/or fittings shall be made in accordance with AWWA C600, except that deflection at joints shall not exceed one-half of the manufacturer's recommended allowable deflection, or one-half of the allowable deflection specified in AWWA C600, whichever is the lesser amount.

D. Before laying thrust restrained and mechanical joint pipe and fittings, all lumps, blisters and excess bituminous coating shall be removed from the bell and spigot ends. The outside of each spigot and the inside of each bell shall be wire brushed, and wiped clean and dry. The entire gasket groove area shall be free of bumps or any foreign matter which might displace the gasket. The cleaned spigot and gasket shall not be allowed to touch the trench walls or trench bottom at any time. Vegetable soap lubricant shall be applied in accordance with the pipe manufacturer's recommendations, to aid in making the joint. The Contractor shall exercise caution to prevent damage to the gasket or the adherence of grease or particles of sand or dirt. Deflections shall only be made after the joint has been assembled.

E. Prior to making up flanged joints in ductile iron pipe and fittings, the back of each flange under the bolt heads and the face of each flange shall have all lumps, blisters and excess bituminous coating removed and shall be wire brushed and wiped clean and dry. Flange faces shall be kept clean and dry when making up the joint, and the Contractor shall exercise caution to prevent damage to the gasket or the adherence of grease or particles of sand or dirt. Bolts and nuts shall be tightened by opposites in order to keep flange faces square with each other, and to ensure that bolt stresses are evenly distributed.

F. Bolts and nuts in thrust restrained, mechanical and flanged joints shall be tightened in accordance with the recommendations of the pipe manufacturer for a leak-free joint. The mechanics shall exercise caution to prevent overstress. Torque wrenches shall be used until, in the opinion of the Engineer, the mechanics have become accustomed to the proper amount of pressure to apply on standard wrenches.

G. Cutting of the ductile iron pipe for inserting valves, fittings, etc., shall be done by the Contractor in a neat and professional manner without damage to the pipe, the lining, or the coating. Pipe 16 inches and larger in diameter shall be cut with a mechanical pipe saw. After cutting the pipe, the plain end shall be beveled with a heavy file or grinder to remove all sharp edges.

H. Areas of loose or damaged lining associated with field cutting shall be repaired or replaced as recommended by the pipe manufacturer and required by the Engineer. Repair methods shall be as recommended by the manufacturer and shall be submitted to the Engineer for review.

I. Any work within the pipe shall be performed with care to prevent damage to the lining. No cable, lifting arms or other devices shall be inserted into the pipe. All lifting, pulling or pushing mechanisms shall be applied to the exterior of the pipe barrel.

J. Homing the pipe shall be accomplished by the use of a hydraulic or mechanical pulling device, unless otherwise accepted by the Engineer. No pipe shall be driven or struck in order to seat it home.

K. Cleaning: Cleaning methods shall be acceptable to the Engineer, and must be sufficient to remove silt, rocks, or other debris which may have entered the pipeline during its installation and shall also follow the requirements of the Section entitled "Pipeline Testing and Disinfection."

- END OF SECTION -

SECTION 15008

PVC NON-PRESSURE PIPE

PART 1 – GENERAL

1.01 THE REQUIREMENT

A. The Contractor shall furnish and install all 6- to 15-inch underground PVC non-pressure pipe where shown on the drawings, complete in place, all in accordance with the requirements of the Contract Documents.

1.02 RELATED WORK SPECIFIED ELSEWHERE

All applicable sections of the Contract Documents

1.03 REFERENCE SPECIFICATIONS, CODES, AND STANDARDS

A. Commercial Standards:

ASTM D 1784	Specification for Rigid Poly (Vinyl Chloride) (PVC) Compounds and Chlorinated Poly (Vinyl Chloride) (CPVC) Compounds.
ASTM D 2241	Specification for Poly (Vinyl Chloride) (PVC) Pressure-Rated Pipe (SDR-Series).
ASTM D 2321	Recommended Practice for Underground Installation of Flexible Thermoplastic Sewer Pipe.
ASTM D 3034	Specification for Type PSM Poly (Vinyl Chloride) (PVC) Sewer Pipe and Fittings.

1.04 SUBMITTALS

A. Samples: The Contractor shall submit to the City for review, samples of all the materials proposed for use on the Work. The samples shall be clearly marked to show the manufacturer's name and product identification and shall be submitted along with the manufacturer's technical data and application instructions. All sample submittals shall conform to the requirements for "Samples" in Section 01300, "Submittals".

B. Shop Drawings: The Contractor shall submit shop drawings and laying diagrams of all Pipe, joints, bends, special fittings, and piping appurtenances in accordance with Section 01300, "Submittals".

C. Certificates: The Contractor shall provide manufacturer's certificates for all materials indicating conformance to the Contract Documents.

1.05 QUALITY ASSURANCE

A. Testing: All materials testing will be based upon applicable ASTM Test Methods and AWWA Standards referenced herein for the materials specified.

B. Certificates: Manufacturer's notarized certificates of compliance shall be furnished by the Contractor.

C. The pipe shall be subjected to the specified hydrostatic strength tests, flexure tests, and crushing tests. The crushing tests shall be made on samples taken from the center of full-length sections of pipe.

1.06 CLEANUP

A. In addition to the requirements of Section 01700, "Project Closeout", the Contractor, upon completion of backfilling and grading over trenches shall remove all excess materials and equipment from the site.

PART 2 – PRODUCTS

2.01 GENERAL

A. All PVC pipe shall be continuously and permanently marked with the manufacturer's name, pipe size, and pressure rating in psi.

B. The Contractor shall also require the manufacturer to mark the date of extrusion on the pipe. This dating shall be done in conjunction with records to be held by the manufacturer for two years, covering quality control tests, raw material batch number, and other information deemed necessary by the manufacturer.

2.02 PIPE

A. All PVC pipe shall be joined by compression joints unless otherwise shown or specified in the Piping Schedule, and shall conform to the following requirements:

1. Polyvinylchloride pipe (PVC) shall conform to the requirements of ASTM D 3034, Class SDR 35. Material for PVC pipe shall conform to the requirements of ASTM D 1784 for Class 12454-B or 12454-C as defined therein.

2. Flexible rubber rings for compression type joints for PVC pipe and fittings shall conform to the requirements of ASTM D 1869.

2.03 FITTINGS

A. All fittings for PVC pipe shall conform to the requirements of ASTM D 2241. The ring groove and gasket ring shall be compatible with PVC pipe ends. The flanged fittings shall be compatible with cast-iron or ductile iron pipe fittings.

B. The strength class of the fittings shall be not less than the strength class of any adjoining pipe.

2.04 BEDDING MATERIAL

A. Unless otherwise specified or shown, all material used for pipe bedding shall conform to the requirements for "Embedment materials" as specified in ASTM D 2321.

PART 3 – EXECUTION

3.01 GENERAL

A. All laying, jointing, testing for defects and for leakage shall be performed in the presence of the City, and shall be subject to his approval before acceptance. All material found during the progress to have defects will be rejected and the Contractor shall promptly remove such defective materials from the site of the Work.

B. Installation shall conform to the requirements of ASTM D 2321 and to the supplementary requirements or modifications specified herein. Wherever the provisions of this Section and the requirements of ASTM D 2321 are in conflict, the more stringent provision shall apply.

3.02 TRENCHING AND BACKFILL

A. Trench excavation and backfill shall conform to the requirements of the Section entitled "Excavation and Backfill for Utilities", and as specified herein.

B. Unless otherwise specified or shown, the maximum width of trenches shall be as specified in said ASTM D 2321.

3.03 LAYING PIPE

A. The pipe shall be installed in accordance with the requirements of ASTM D 2321 and as specified herein and shown and the sections shall be closely jointed to form a smooth flow line. Immediately before placing each section of pipe in final position for joining, the bedding for the pipe shall be checked for firmness and uniformity of surface.

B. Proper implements, tools, and facilities as recommended by the pipe manufacturer's standard printed installation instructions shall be provided and used by the Contractor for safe and efficient execution of the Work. All pipe, fittings, valves, and accessories shall be carefully lowered into the trench by means of backhoe, ropes, or other suitable equipment in such a manner as to prevent damage to pipe and fittings. Under no circumstances shall pipe or accessories be dropped or dumped into the trench.

C. Cutting and machining of the pipe shall be accomplished in accordance with the pipe manufacturer's standard procedures for this operation. Pipe shall not be cut with a cold chisel, standard iron pipe cutter, nor any other method that may fracture the pipe or will produce ragged, uneven edges.

D. The pipe and accessories shall be inspected for defects prior to lowering into the trench. Any defective, damaged or unsound pipe shall be repaired or replaced. All foreign matter

or dirt shall be removed from the interior of the pipe before lowering into position in the trench. Pipe shall be kept clean during and after laying. All openings in the pipeline shall be closed with water tight expandable type sewer plugs or PVC test plugs at the end of each day's operation or whenever the pipe openings are left unattended. The use of burlap, wood, or other similar temporary plugs will not be permitted.

E. Adequate protection and maintenance of all underground and surface utility structures, drains, sewers, and other obstructions encountered in the progress of the Work shall be furnished by the Contractor.

F. Where the grade or alignment of the pipe is obstructed by existing utility structures such as conduits, ducts, pipes, branch connections to main sewers, or main drains, the obstruction shall be permanently supported, relocated, removed, or reconstructed by the Contractor in cooperation with owners of such utility structures.

3.04 HANDLING

A. Handling of the PVC pipe shall be done with care to ensure that the pipe is not damaged in any manner during storage, transit, loading, unloading, and installation.

B. Pipe shall be inspected both prior to and after installation in the ditch and all defective lengths shall be rejected and immediately removed from the working area.

3.05 FIELD JOINTING

A. Each pipe compression type joint shall be joined with a lock-in rubber ring and a ring groove that is designed to resist displacement during pipe insertion.

B. The ring and the ring seat inside the bell shall be wiped clean before the gasket is inserted. At this time a thin film of lubricant shall be applied to the exposed surface of the ring and to the outside of the clean pipe end. Lubricant other than that furnished with the pipe shall not be used. The end of the pipe shall be then forced into the ring to complete the joint.

C. The pipe shall not be deflected either vertically or horizontally in excess of the printed recommendations of the manufacturer of the coupling.

D. When pipe laying is not in progress, the open ends of the pipe shall be closed to prevent trench water from entering pipe. Adequate backfill shall be deposited on pipe to prevent floating of pipe. Any pipe which has floated shall be removed from the trench, cleaned, and relaid in an acceptable manner. No pipe shall be laid when, in the opinion of the City, the trench conditions or weather are unsuitable for such Work.

3.06 INSTALLATION OF BENDS, TEES, AND REDUCERS

A. Cast-iron and PVC fittings shall be installed Utilizing standard installation procedures. Fittings shall be lowered into trench by means of rope, cable, chain, or other acceptable means without damage to the fittings. Cable, rope, or other devices used for lowering fitting into trench, shall be attached around exterior of fitting for handling. Under no circumstances shall the cable, rope or other device be attached through the fitting's interior

for handling. Fittings shall be carefully connected to pipe or other facility, and joint shall be checked to insure a sound and proper joint.

3.07 PIPE-TO-PIPE CONNECTIONS

A. Pipe-to-pipe connections shall be made by using flexible banded, sheer reinforced couplings or adapter couplings, each with compression joints, in compliance with ASTM C 425.

3.08 PIPE-TO-PIPE MANHOLE CONNECTIONS

A. When a sound pipe stub-out exists at a manhole to which connection is to be made, a pipe-to-pipe connection shall be made as described above. If a stub-out is not present or is faulty, an opening shall be cut in the manhole wall and the connection made. The connection shall consist of a pipe stub-out with elastomeric waterstop grouted into the opening with non-shrink grout. A flexible band coupling, as shown on the details for new manholes, shall join the pipe stub-out to the replacement pipe. The invert or floor inside the manhole shall be cut and reshaped as necessary.

3.09 GRAVITY SEWER SERVICE LATERALS

A. Lateral sewers shall be installed in accordance with all the applicable requirement for pipe installation. Branch fittings shall be installed in the main line sewer as it is constructed, in the locations and configuration of the original laterals or as designated by the City.

B. The existing laterals shall be hand excavated to a joint, saw cut, clean and square and the appropriate adapter installed to connect the replacement laterals. Care shall be taken to maintain the slopes of the existing laterals. The laterals shall be removed and replaced from the main line to a point along the existing lateral as determined by the City to be in acceptable condition.

C. The Contractor shall not excavate trenches for laterals on both sides of the street at the same time unless written permission has been secured in advance to close the street.

3.10 TESTING

A. Field testing of gravity sewer pipe shall conform to the requirements of Section 15995, "Pipeline Testing and Disinfection".

- END OF SECTION -

SECTION 15009

PVC PRESSURE PIPE

PART 1 – GENERAL

1.01 THE REQUIREMENT

A. This section includes materials, installation, and testing of polyvinyl chloride (PVC) pipe and fittings for use in process piping having a maximum operating pressure of 150 psi at a maximum operating temperature of 100 degrees F and a maximum operating pressure of 100 psi at a temperature of 120 degrees F.

1.02 RELATED WORK SPECIFIED ELSEWHERE

A. Section 01300 – Submittals

B. Section 01600 – Materials and Equipment

C. Section 15000 – Basic Mechanical Requirements

1.03 SUBMITTALS

A. Submit shop drawings in accordance with the General Conditions.

B. Submit materials list.

C. Submit manufacturer's recommended method of installing buried pipe. Show alignments and offsets for "snaking" buried pipe.

PART 2 – MATERIALS

2.01 PIPE

A. Pipe shall be Schedule 80, Type 1, Grade 1 (Class 12454B), conforming to ASTM D 1784, except as noted below.

2.02 NIPPLES

A. Short nipples shall be the same as the PVC pipe.

2.03 FITTINGS

A. Fittings shall be Schedule 80 and shall conform to ASTM D 2464 for threaded fittings and ASTM D 2467 for socket-type fittings.

2.04 FLANGES

A. PVC flanges shall be made of the same material as the pipe. Flanges shall match the dimensions of ANSI B16.5, Class 150, steel flanges. Flanges shall be flat face.

B. Flanges shall be Van Stone style unless otherwise noted.

2.05 UNIONS

A. Union shall have socket-type ends, EPDM o-rings, and shall be Schedule 80. Material shall be Type 1, Grade 1 PVC, per ASTM D 1784, Class 12454B.

2.06 JOINTS

A. Pipe and fittings joints shall be socket welded except where threaded and flanged joints are required to connect to unions, valves, and equipment.

B. Solvent cement for socket joints shall comply with ASTM D 2564 and be NSF listed for potable water.

C. Manufacturer shall provide written conformance of solvent cement with intended chemical application.

2.07 BOLTING AND NUTS FOR FLANGES

A. Bolts and nuts for interior flanges shall be carbon steel conforming to ASTM A 307, Grade B.

B. Bolts and nuts for buried flanges and flanges located outdoors above ground or in vaults and structures shall be Type 316 stainless steel conforming to ASTM A 193, Grade B8M for bolts, and ASTM A 194, Grade 8M for nuts. Bolts and nuts larger than 1-1/8 inch shall be steel, ASTM A 307, Grade B, with cadmium plating, ASTM A 165, Type NS.

C. Provide washers for each nut. Washers shall be of the same material as the nut.

PART 3 – EXECUTION

3.01 GENERAL

A. Do not install PVC pipe when the temperature is below 40 degrees F or above 90 degrees F. Store loose pipes on racks with a minimum support spacing of 3 feet. Provide shade for pipe stored outdoors or installed outdoors until the pipe is filled with water.

B. Store fittings indoors in their original cartons.

C. Store solvent cement indoors or, if outdoors, shade from direct sunlight exposure. Do not use solvent cements which have exceeded the shelf life marked on the storage container.

D. Before installation, check pipe and fittings for cuts, scratches, gouges, buckling, kinking, or splitting on pipe ends. Remove any pipe section containing defects by cutting out the damaged section as a complete cylinder.

3.02 INSTALLATION

A. Do not drag PVC pipe over the ground, drop it onto the ground, or drop objects on it. Cut pipe ends square and remove all burrs, chips, and fillings before joining pipe or fittings. Bevel solvent welded pipe ends as recommended by the pipe manufacturer.

3.03 SOLVENT WELDED JOINTS

A. Prior to solvent welding, remove fittings and couplings from their cartons and expose them to the air for at least one hour to the same temperature conditions as the pipe.

B. Wipe away loose dirt and moisture from the ID and OD of the pipe end and the ID of the fitting before applying solvent cement. Do not apply solvent cement to wet surfaces.

C. Make up solvent welded joints per ASTM D 2855.

D. Allow at least eight hours of drying time before moving solvent welded joints or subjecting the joints to any internal or external loads or pressures.

3.04 FLANGED JOINTS

A. Lubricate bolt threads with MRO solution 1000 Food Grade Antiseize, or equal before installation.

B. Tighten bolts on PVC flanges by tightening the nuts diametrically opposite each other using a torque wrench. Complete tightening shall be accomplished in stages and the final torque values shall be as shown in the following table:

Pipe Size (inches)	Final Torque (foot-pounds)
1/2 to 1-1/2	10 to 15
2 to 4	20 to 30
5 to 8	30 to 40
10	60 to 70

3.05 THREADED JOINTS

A. Cut threaded ends on PVC to the dimensions of ANSI B2.1. Ends shall be square cut. Follow the pipe manufacturer's recommendations regarding pipe holddown methods, saw cutting blade size, and saw cutting speed.

B. Pipe or tubing cutters shall be specifically designed for use on PVC pipe. Use cutters manufactured by Reed Manufacturing Company, Ridge Tool Company, or equal.

C. If a holddown vise is used when the pipe is cut, insert a rubber sheet between the vise jaws and the pipe to protect from scratching the pipe.

D. Thread cutting dies shall be clean and sharp and shall not be used to cut materials other than plastic.

E. Apply Teflon thread compound or Teflon tape lubricant to threads before screwing on the fitting. Teflon tape shall be of type A-A-58092 or MIL-T-27730A manufactured by Threadmaster or equal. Use White tape for all chemical applications and Pink tape for all water applications.

3.06 INSTALLING UNIONS

A. Provide unions on exposed piping 3 inches and smaller as follows:

1. Provide a union at every change in direction (horizontal and vertical).

2. Provide a union 6 to 12 inches downstream of valves.

3. Provide a union every 40 feet in straight piping runs.

4. Near threaded connections to mechanical or piping equipment.

5. Where shown on the Drawings.

3.07 INSTALLING BURIED PIPE

A. Trench bottom shall be continuous, smooth, and free of rocks. See the details on the Drawings for trench dimensions, pipe bedding, and backfill.

B. After the pipe has been solvent welded and the joints have set, snake the pipe in the trench per the pipe manufacturer's recommendations in order to allow for thermal expansion and contraction of the pipe.

C. Do not backfill the pipe trench until the solvent welded joints have set. Support the pipe uniformly and continuously over its entire length on firm, stable soil. Do not use blocking to change pipe grade or to support pipe in the trench.

D. Install buried PVC pipe in accordance with ASTM D 2774 and the pipe manufacturer's recommendations. Backfill materials in the zone between the trench bottom and to a point 8 inches above the top of the pipe shall be imported fill per the Section entitled "Excavation and Backfill for Utilities." Compact by means of vibratory equipment or by flooding. Apply backfill in layers having a maximum thickness of 8 inches. If water flooding is used, do not add successive layers unless the previous layer is compacted to 90 percent relative compaction.

3.08 INSTALLING ABOVEGROUND PIPE

A. Install pipe on pipe hangers and supports as detailed on the Drawings and as specified in the Section entitled "Pipe Supports." Install pipe without springing, forcing, or stressing the pipe or the adjacent valves and equipment to which the pipe is connected.

3.09 PAINTING AND COATING

A. Coat piping in accordance with requirements of the Section entitled “Painting.”

3.10 HYDROSTATIC TESTING

A. Perform hydrostatic testing for leakage in accordance with requirements set forth in the Section entitled “Pipeline Testing and Disinfection.”

- END OF SECTION -

SECTION 15020

PIPE SUPPORTS

PART 1 – GENERAL

1.01 THE REQUIREMENT

A. The Contractor shall provide all tools, supplies, materials, equipment, and all labor necessary for the furnishing, construction, and installation of all pipe supports, hangers, guides, and anchors shown, specified, or required for a complete and operable piping system, in accordance with the requirements of the Contract Documents.

1.02 RELATED WORK SPECIFIED ELSEWHERE

A. Section 11000 – Equipment General Provisions

B. Section 15000 – Basic Mechanical Requirements

C. Section 15095 – Valves, General

1.03 REFERENCE SPECIFICATIONS, CODES, AND STANDARDS

A. Commercial Standards

1. ASME B31.1 — Power Piping
2. ASTM A123 — Standard Specifications for Zinc (Hot-Dip Galvanized) Coatings on Iron and Steel Products

1.04 SUBMITTALS

A. Shop Drawings: The Contractor shall furnish complete shop drawings of all pipe supports, hangers, anchors, and guides, as well as calculations for special supports and anchors, in accordance with the Section entitled “Submittals.”

PART 2 – PRODUCTS

2.01 GENERAL REQUIREMENTS

A. As a minimum, supports shall be provided where identified on the Drawings. The Contractor shall note that all pipe support locations are not shown on the Drawings and shall follow the Specifications herein in locating supports. Where deviations and modifications are required, they shall be made subject to review by the Engineer. A detailed layout of pipe supports for each building shall be submitted to the Engineer for review.

B. All supports and parts required for the installation of the piping systems shall conform to requirements of the ASME B31.1 and MSS Standard practice SP-58 and SP-69, except

as modified and supplemented by the requirements set forth herein. All piping shall be supported in such a manner to fulfill the intent of this Specification.

C. Unless otherwise indicated on the Contract Drawings, all piping shall be rigidly supported from the building structure by approved hangers, inserts, or supports. No piping shall be supported from other piping or from metal stairs, ladders, and walkways unless specifically permitted by the Engineer.

D. Unless otherwise indicated on the Contract Drawings, piping supports shall consist of concrete piers or fabricated steel supports as specified below. Materials and quality shall be in full compliance with Division 3, Concrete, and Division 5, Metals, of these Specifications.

E. Supporting appurtenances shall be arranged to prevent undue stress on equipment to which piping is connected. Supporting appurtenances shall provide the desired pitch as specified or required for proper drainage of the piping. The pipe suspension shall prevent excessive stress, excessive variation in supporting force, and possible resonance with imposed vibration while the system is in operation. All valves and valve operators shall be rigidly supported independently of the piping. Vertical runs of pipe shall be supported independently of the connected horizontal runs. All vertical pipes shall be supported at each floor or at intervals of at least 10 feet by approved pipe collars, clamps, brackets or wall rests. Supporting appurtenances, when used with copper piping, shall be copper, bronze or bronze plated. All piping shall be supported independently of the equipment to which it is connected. All in line devices (flow meters, etc.) shall be removable without the need for temporary supports for adjacent and connecting piping.

F. In general, the type of pipe supports to be used shall be as follows unless otherwise shown on the Drawings:

Centerline of Pipe above Floor	Type of Pipe	Type of Support
0 - 3 ft.	Metal	Concrete Pier
0 - 3 ft.	Plastic	Metal Framing System
3 - 6 ft.	All	Saddles or Brackets
>6 ft.	All	Hangers

G. Wall bracket supports shall be used where shown for pipe to be installed adjacent to a wall. Where it is not feasible to install hanger supports, adjustable pipe saddle supports may be used upon review and acceptance by the Engineer.

H. For all couplings, supports shall be placed on each side and as close to the coupling as possible. Supports shall be of the guide type which prevent axial movement resulting in pipe deflection or misalignment.

I. Structural steel members can be used to support pipe.

J. Stainless steel piping installed in tanks, channels or conduits shall be supported by hangers, hanger rods, hardware and inserts fabricated of Type 316 stainless steel.

K. Where a specific pipe support is called for on the Drawings, this support shall be used as and where indicated for the specific application. In general, spacing of supports shall be as specified herein unless specifically modified by the Engineer.

L. All support, saddles, bearing plates, and hangers, shall support by direct contact the pipe a minimum of 120 degrees around, except as specified herein.

M. Where continuous concrete inserts are used, the maximum concentrated load on the end two (2) inches of inserts, with laying lengths of eight (8) inches or longer, shall not be more than 50 percent of the maximum recommended loading of the channel. All pipe supports shall be positioned such that they will not interfere with the use of hoisting equipment, where provided.

N. Pipes subject to thermal expansion shall be installed perfectly aligned and concentrically guided. These piping (process air, hot water, etc.) support systems shall be roller supports as specified herein and shall be submitted to the Engineer for review. The submittal shall show location of anchors, concentric pipe guides and expansion joints (single or double).

2.02 PIPE ROLLER SUPPORTS

A. The Contractor shall furnish and install self-lubricating roller supports as shown on the Contract Drawings and as specified herein. Roller supports shall be Grinnell Figure No. 271 or equal. Assemblies shall include all directly connected or welded anchorage hardware.

B. Roller supports shall meet the loading requirements of the design and conforming to the details on the Drawings. The rollers shall have support section fabricated of the same material as is the pipe to be supported, a 300 series stainless steel slide plate, and a carbon steel base to which the Teflon is applied. The support plates at roller supports shall be stitch welded to stainless steel pipe at all roller support locations.

C. The roller supports shall be installed in the exact locations shown or indicated on the Contract Drawings, at required elevations, true to orientation and level, assuring that the correct half of each roller is in its proper position. The Contractor shall store the rollers to protect them from mechanical damage prior to installation, and shall protect the same during and after installation from contamination and damage due to placing of concrete and other materials. The Contractor shall clean the operation surfaces of rollers thoroughly before final assembly.

2.03 PIPE SUPPORT SPACING

A. The distance between supports for each size of pipe shall not exceed those listed in the attached schedule. However, if the pipe size to be supported is not listed in the schedule, the next smaller nominal pipe size spacing shall be used. In all cases, there shall be a minimum of one support per laying length of pipe on uninterrupted horizontal runs. This support shall be placed within one (1) foot of the joint. If the pipe manufacturer recommends a smaller spacing interval than specified herein, then the manufacturer's spacing shall be used.

B. The distance between supports shall not exceed that listed in the following schedule unless otherwise noted:

Nominal Pipe Size (in.)	Metallic Piping (ft.)	Plastic and Copper Piping (ft.)
1/2	5	3
3/4 to 1-1/2	6	3
2 to 3	6	4
4	10	5
6 and larger	10	6

2.04 SADDLES

A. Pipe saddles shall be used to cradle horizontal piping when being supported from below except where expansion of pipe requires rollers. All saddles shall be capable of being adjusted after installation.

2.05 BASE ELBOWS, TEES AND CONCRETE PEDESTALS

A. Base elbows, tees and concrete pedestals shall be provided at the locations shown on the Drawings and as specified. All vertical runs of pipe shall be supported on a base elbow and/or concrete pedestal. After completion of curing of the concrete pedestal, the piping shall be adjusted to the proper grade.

2.06 PIPE HANGERS AND HANGER RODS

A. Where pipe hangers are used, they shall be of the clevis or friction clamp type except where there is longitudinal movement due to temperature changes. Where longitudinal movement occurs, the adjustable yoke roller type hanger shall be used. See the hanger schedule below for location/type of hangers to be used. Pipe hangers shall be capable of supporting the pipe in all conditions of operation. They shall allow free expansion and contraction of the piping, and prevent excessive stress resulting from transferred weight being induced into the pipe or connected equipment.

B. Hangers shall be designed so that they cannot become disengaged by movements of the supported pipe. Lock nuts shall be used on all hangers. All piping systems shall be supported by means of hangers having an individual means of vertical adjustment for leveling of lines after piping is in place.

C. Spacing and arrangements shall conform to the requirements of Section 6, Chapter 1 of ASME B31.1. Spacing indicated shall be the maximum spacing.

PIPE HANGER SCHEDULE

Piping System	Hanger Type	Grinnell or Equal	Materials of Construction
All	Clevis Friction	Figure 260	Hot-Dip Galvanized

D. Hanger rods shall be subject to tensile loading only. At hanger locations where lateral or axial movement is anticipated, suitable linkage shall be provided to permit swing. Stainless steel hangers required in the pipe hanger schedule shall be supported by hanger

rods, hardware and inserts fabricated of Type 316 stainless steel. All other rods, hardware and inserts shall be fabricated of hot-dip galvanized steel.

E. All concrete inserts and/or expansion bolts shall be capable of supporting the maximum working load of the rod, which is attached to it.

F. Sheet metal insulation protector saddle shall be used for all hot water piping, refrigerant piping, etc. Saddle shall be Grinnell Figure 167, or equal.

G. A neoprene isolation pad shall be provided between galvanized clevis and stainless steel piping.

2.07 HARNESSED PIPE SUPPORTS

A. Pipe harness straps shall be provided on concrete pedestal supports where shown on the Drawings and required by these Specifications.

B. Harness straps shall be 1/4-inch-thick, 316 stainless steel and attached to the concrete pedestal supports by stainless steel anchors.

C. Strap width shall be in accordance with the Table below:

Pipe Diameter	Strap Width
4 inches and below	2 inches
6 inches and above	3 inches

2.08 METAL FRAMING SYSTEMS

A. A metal framing system as manufactured by Unistrut, Globe-Strut or equal may be used for supporting the piping system. The metal framing system shall be designed and installed according to manufacturer's recommended procedure and shall be capable of supporting the piping system as specified herein.

B. Channels, inserts and closure strips shall be cold formed mild steel conforming to ASTM A1011 unless otherwise noted on the Drawings.

C. Fittings shall be Hot Rolled Steel conforming to ASTM A307 or ASTM A1011 and fasteners shall conform to ASTM A307 unless otherwise noted on the Drawings. All pieces shall be hot-dip galvanized after fabrication, unless otherwise noted on the Drawings.

2.09 PIPE SUPPORTS FOR PLASTIC PIPE

A. All pipe supports that will be used with plastic pipe shall be provided with a bearing plate where the width of hanger is less one-half (1/2) of the supported pipe's diameter. The bearing plate must provide bearing 180 degrees around and shall have a minimum laying length of 1/2 the pipe diameter or three (3) inches minimum. The bearing plates shall be rigid, corrosion resistant and not subject to long term plastic flow properties. To assure one hundred (100) percent bearing, the pipe shall be seated on a filler. This material shall be compatible for use with the pipe. Clamps to be used with plastic pipe shall be fitted snug and shall not exert clamp pressure on the pipe.

2.10 THRUST RESTRAINT

A. Pipe anchors shall be spaced to divide pipe into sections. Anchors shall be located at valves, changes in direction of piping, and major branch connections. Anchors shall be of a type recommended by the pipe manufacturer and reviewed by the Engineer.

B. On all piping, where sleeve type couplings and flanged adapters are located near fittings or valves, tie rods shall span across the coupling as specified herein to restrain movements of the pipe along its axial direction. Such restraints can be deleted if both ends of the pipe are anchored in a concrete structure with no fitting or valve occurring within the span length, in the suction piping to a pump where the coupling is between the pump and valve, or when the water pressure measured at the crown of the pipe is less than five (5) feet.

C. All sleeve type couplings shall be harnessed except where noted. The harnessing shall be as shown on the drawings or as specified herein. Harnesses for steel pipe shall be in accordance with AWWA Manual M11 for the pipe size and pressure, working or test whichever is greater.

D. Harnesses for ductile iron pipe shall be tie rods spanning between adjacent flanges. Friction clamps shall not be permitted. The size and number of tie rods shall be the same as for steel pipe for the same pressure and pipe size.

E. Where the distance between adjacent flanges is in excess of ten (10) feet or where a harness cannot be used, the pipe supports adjacent to the coupling shall restrain the piping preventing any linear or angular movement resulting in the pipe separating from the coupling or misalignment in the joint.

F. Where expansion joints are used, control units shall be provided. All tie rods and control units shall be installed in accordance with the manufacturer's recommended procedures.

G. Tie rods and associated hardware shall be Type 316 stainless steel.

H. In general, all valves and fittings shall be restrained in an approved manner such that the unbalanced force developed at them shall be supported independent of the piping system.

2.11 MANUFACTURED SUPPORTS

A. Where not specifically shown or detailed, designs, generally accepted as exemplifying good engineering practice, using stock or production parts, shall be utilized wherever possible. Such parts shall be locally available, new, of best commercial quality, designed and rated for the intended purpose.

B. Support products shall be supplied by the following manufacturers:

1. Basic Engineers, Pittsburgh, PA;

2. Bergen-Paterson Corp., Boston, MA;

3. Elcen Metal Products Company, Franklin Park, IL;

4. ITT-Grinnell Corp., Warren, OH;

5. NPS Industries, Inc., Secaucus, NJ.

6. Or equal

2.12 COATING

A. Unless otherwise shown or specified, all fabricated pipe supports, other than stainless steel or non-ferrous supports, shall be blast-cleaned after fabrication and hot-dip galvanized in accordance with ASTM A123.

B. Other than the supports mentioned in Paragraph 2.12A, all supports shall receive protective coatings in accordance with the requirements of the Section entitled “Painting.”

PART 3 -- EXECUTION

3.01 INSTALLATION

A. All pipe supports, hangers, brackets, anchors, guides, and inserts shall be fabricated and installed in accordance with the manufacturer's printed instructions and ASME B31.1. All concrete inserts for pipe hangers and supports shall be coordinated with the formwork.

B. Pipe supports and hangers shall be positioned in such a way as to produce an orderly, neat piping system. All hanger rods shall be vertical, without offsets. Hangers shall be adjusted to line up groups of pipes at the proper grade for drainage and venting, as close to ceilings or roofs as possible, without interference with other Work.

C. The distance between supports for each size of pipe shall not exceed those listed in the attached schedule. However, if the pipe size to be supported is not listed in the schedule, the next smaller nominal pipe size spacing shall be used. In all cases, there shall be a minimum of one support per laying length of pipe on uninterrupted horizontal runs. This support shall be placed within one foot of the joint. If the pipe manufacturer recommends a smaller spacing interval than specified herein, then the manufacturer's spacing shall be used.

D. Each section of the pipeline shall be laid out and all connections made while the pipe is held in temporary supports. After completion of connections, the pipe may be clamped in position. When piping is correctly installed, a clamp or pipe connection may be loose or removed without displacement of the pipeline.

3.02 FABRICATION

A. Pipe hangers and supports shall be fabricated and installed by experienced welders and fitters, using the best welding procedures available. Fabricated supports shall be neat in appearance without sharp corners, burrs, and edges.

- END OF SECTION -

SECTION 15030

PIPING AND EQUIPMENT IDENTIFICATION SYSTEMS

PART 1 – GENERAL

1.01 THE REQUIREMENT

A. The Contractor shall furnish and install all components of the system for identification of piping and equipment as specified hereinafter. The system shall include the application of color coding to all new and altered plant piping. The Contractor shall paint the equipment and piping of all Contracts in the colors herein specified, and in accordance with the requirements of the Section entitled “Painting.”

B. In addition to the identification systems specified herein the Engineer may order the Contractor to furnish and install additional identification legends and arrows at no additional cost to the City. Such additional signs may be requested near completion of the work and shall be limited to no more than five (5) signs for each type specified herein. The lettering and color combinations for additional signs shall conform to the requirements specified herein.

1.02 SUBMITTALS

A. The Contractor shall submit shop drawings and manufacturer’s product literature in accordance with the Sections entitled “Submittals” and “Materials and Equipment.” In addition, the Contractor shall submit with the shop drawings a schedule of the colors and designations proposed for each service.

B. A minimum of four (4) color charts with cross-references to the colors and services listed herein shall be included with the Submittal. The City shall select the final color for each service during shop drawing review.

PART 2 – PRODUCTS

2.01 PIPING BANDS AND STRIPES

A. All new and altered piping shall receive identification bands. Such bands shall be 6 inches wide, neatly made by masking, and spaced at intervals of 30 inches on centers regardless of the diameter of the pipe being painted.

B. The Contractor may use approved precut and prefinished metal bands on piping, in lieu of the masked and painted bands, where approved by the Engineer. Banding colors shall be as indicated in Article 2.03 of this Section.

C. Buried potable water piping shall be identified by continuous blue stripes in accordance with FDEP 62-555.

2.02 PIPING IDENTIFICATION LETTERING AND ARROWS

A. The Contractor shall apply identification lettering in the form of plain upper-case block lettering giving the name of the pipe contents and arrows indicating the direction of flow of liquids to all types and sections of piping.

B. All lettering and arrows shall be of the vinyl, self-adhesive tape type or the plastic snap-on/strap-on type with self-gripping fasteners. Pipe-marking devices (i.e., tape or snap-on/strap-on type) shall be suitable for a 5 to 8-year outdoor life without discoloration. Pipe marking devices shall be as manufactured by Lab Safety Supply, or equal.

C. Identification lettering and arrows shall be placed as directed by the Engineer but shall generally be located every ten feet and shall be properly inclined to the pipe axis to facilitate easy reading. Lettering shall also appear directly adjacent to each side of any wall or slab the pipeline passes through, with a minimum of two titles on each pipe in one structure. Identification lettering shall be located midway between color coding bands where possible.

D. Lettering, background and arrow colors shall be the manufacturer's standard colors unless otherwise directed by the Engineer.

E. All lettering and arrows shall have an overall height in inches in accordance with Table 15030-1.

Table 15030-1
Height of Pipe Lettering

Diameter of Pipe or Pipe Covering	Height of Lettering
3/4 to 1 1/4 inches	1/2 inch
1 1/2 to 2 inches	3/4 inches
2 1/2 to 6 inches	1 1/4 inches
8 to 10 inches	2 1/2 inches
Over 10 inches	3 1/2 inches

F. The manufacturer's instructions shall be followed in respect to storage, surface preparation and application.

G. For piping less than ¾ inch diameter, the Contractor shall furnish and attach corrosion resistant color tags with the required lettering.

H. Pipe lettering for each service type shall be as indicated in Article 2.03 of this Section.

2.03 PIPING AND EQUIPMENT IDENTIFICATION SCHEDULE

A. Pipe lettering, pipe base color and band color shall match existing services. The Contractor shall provide the colors selected by the City from the painting manufacturer's color charts during shop drawing review.

PART 3 – EXECUTION

(NOT USED)

- END OF SECTION -

SECTION 15095

VALVES, GENERAL

PART 1 – GENERAL

1.01 THE REQUIREMENT

A. The Contractor shall furnish and install, complete with all assemblies and accessories, all valves shown on the Drawings and specified herein including all fittings, appurtenances and transition pieces required for a complete and operable installation.

B. All valves shall be constructed of first quality materials which have strength, wearing, and corrosion resistance characteristics entirely suitable for the types of service for which the individual valves are designated. Except where noted otherwise, valves designated for water service shall conform to pertinent sections of the latest revision of AWWA C500 Specifications. Cast iron valve bodies and parts shall meet the requirements of the latest revision of ASTM Designation A-126, "Standard Specifications for Gray Iron Castings for Valves, Flanges, and Pipe Fittings, Class B."

C. All valve body castings shall be clean, sound, and without defects of any kind. No plugging, welding, or repairing of defects will be allowed.

D. Valves shall have flanged ends for exposed service and mechanical joint ends for buried service, unless otherwise shown on the Drawings or specified herein. Flanged ends shall be flat-faced, 125 lb. American Standard unless otherwise shown or specified in accordance with ANSI B16.1. All bolt heads and nuts shall be hexagonal of American Standard size. The Contractor shall be responsible for coordinating connecting piping. Valves with screwed ends shall be made tight with Teflon tape. Unions are required at all screwed joint valves.

E. Valve Labeling: A label shall be provided on all shut-off valves exclusive of hose bibbs. The label shall be of 1/16-inch plastic or stainless steel, minimum 2 inches by 4 inches in size, and shall be permanently attached to the valve or on the wall adjacent to the valve or as indicated by the Engineer.

F. Provide required spare parts, special tools and one-year supply of lubricants for all valves.

1.02 RELATED WORK SPECIFIED ELSEWHERE

A. Section 01300 – Submittals

B. Section 01600 – Materials and Equipment

C. Section 09900 – Painting

D. Section 15000 – Basic Mechanical Requirements

E. Section 15100 – Valve Operators

1.03 SUBMITTALS

A. The Contractor shall furnish to the City, through the Engineer, a Performance Affidavit where required in individual valve specifications, utilizing the format specified in the Section entitled “Equipment General Provisions.” Performance tests shall be conducted in accordance with the latest revision of AWWA C500 and affidavits shall conform to the requirements of the Specifications

B. Shop Drawings conforming to the requirements of the Section entitled “Submittals,” are required for all valves, and accessories. Submittals shall include all layout dimensions, size and materials of construction for all components, information on support and anchoring where necessary, pneumatic and hydraulic characteristics and complete descriptive information to demonstrate full compliance with the Documents. Shop Drawings for electrically operated/controlled valves shall include all details, notes, and diagrams which clearly identify required coordination with the electrical power supply and remote status and alarm indicating devices. Electrical control schematic diagrams shall be submitted with the Shop Drawings for all electrical controls. Diagrams shall be drawn using a ladder-type format in accordance with JIC standards. Shop Drawings for pneumatically operated/controlled valves shall include all details, notes, and diagrams which clearly identify required coordination with the compressed air (service air) system and electrical controls.

C. Operation and maintenance manuals and installation instructions shall be submitted for all valves and accessories in accordance with the Specifications. The manufacturer(s) shall delete all information which does not apply to the equipment being furnished.

D. Spare parts list.

E. Special tools list.

1.04 CONTRACTOR'S RESPONSIBILITIES

A. The Contractor shall provide the services of a qualified representative of the manufacturer(s) of the equipment to check out and certify the installation(s), to supervise the initial operation, and to instruct the City's operating personnel in proper operation and maintenance procedures. Services of the qualified representative will require a minimum of two (2) site visits, one for installation and testing and one for startup and training, and will be for the minimum number of days recommended by the manufacturer and approved by the Engineer, but will not be less than the number of days specified in individual equipment sections.

B. Any additional time required to achieve successful installation and operation shall be at the expense of the Contractor. The manufacturer's representative shall sign in and out at the office of the Engineer's Resident Project Representative on each day the manufacturer’s representative is at the project.

C. A written report covering the representative's findings and installation approval shall be mailed directly to the Engineer covering all inspection and outlining in detail any deficiencies notes.

D. The times specified are exclusive of travel time to and from the facility and shall not be construed as to relieve the manufacturer of any additional visits to provide sufficient service to place the equipment in satisfactory operation.

PART 2 -- PRODUCTS

2.01 FLOW INDICATORS

A. Flow indicators shall be the Akron ball-type as manufactured by Brooks Instrument Co., Fischer and Porter, or equal, and shall have bronze bodies, glass dome, and plastic ball.

2.02 CORPORATION STOPS

A. Corporation stops shall be of bronze with tapered male iron pipe threads on inlets and outlets. Terminal outlets shall have screwed bronze hex head dust plugs or caps. Unions shall be used on all corporation stop outlets with connecting piping. Corporation stops shall have a minimum working pressure rating of 250 psi and shall be as manufactured by Mueller Co., Hays Mfg. Div. of Zurn Industries, or equal.

2.03 FLOOR BOXES

A. Floor boxes shall be provided for all nut operated or floor accessed valves. Floor boxes shall be of the adjustable, sliding type, cast iron, suitable to withstand heavy traffic, as manufactured by James B. Clow & Sons, Kennedy Valve Mfg. Co., or equal. The covers shall be marked with appropriate designations of piping contents (i.e.: water, sewer) and bases shall be the round type. All nut operated valves in this Section shall be clearly identified by stainless steel or laminated plastic identification tags. The tags shall be permanently affixed to the inside of the floor boxes, under grating, etc. and shall bear the embossed letters which clearly identify each valve by its appropriate designation.

B. Two (2) valve operating wrenches shall be supplied in 4 foot lengths with tee handles for each size nut supplied. Valve wrenches shall be Model No. F-2520 as manufactured by James B. Clow & Sons, Kennedy Valve Mfg. Co., Figure No. 122, or equal.

2.04 VALVE BOXES

A. The Contractor shall furnish and install valve boxes as shown on the Drawings and specified herein.

B. All valve boxes shall be placed so as not to transmit shock or stress to the valve and shall be centered and plumb over the operating nut of the valve. The ground in the trench upon which the valve boxes rest shall be thoroughly compacted to prevent settlement. The boxes shall be fitted together securely and set so that the cover is flush with the finished grade of the adjacent surface. A concrete pad as detailed on the Drawings shall be provided around the valve box, sloped outwards.

C. All valve boxes shall be 2-piece cast iron, sliding type, 5-1/4-inch shaft, with heavy duty traffic weight collar and the lid marked with the appropriate carrier product (i.e.: WATER). Boxes shall be as manufactured by James B. Clow & Sons, Kennedy Valve Mfg. Co., Charlotte Pipe and Foundry Company, or equal.

PART 3 -- EXECUTION

3.01 INSTALLATION

A. Except where noted otherwise herein, all valves shall be installing and tested in accordance with the latest revision of AWWA C500. Before installation, all valves shall be lubricated, manually opened and closed to check their operation and the interior of the valves shall be thoroughly cleaned. Valves shall be placed in the positions shown on the Drawings. Joints shall be made as directed under the Piping Specifications. The valves shall be so located that they are easily accessible for operating purposes and shall bear no stresses due to loads from the adjacent pipe. The Contractor shall be responsible for coordinating connecting piping.

B. All valves shall be tested at the operating pressures at which the particular line will be used. Any leakage or "sweating" of joints shall be stopped, and all joints shall be tight. All motor operated and cylinder operated valves shall be tested for control operation as directed by the Engineer.

C. Provide valves in quantity, size, and type with all required accessories as shown on the Drawings.

D. Install all valves and appurtenances in accordance with manufacturer's instructions. Install suitable corporation stops at all points shown or required where air binding of pipe lines might occur. Install all valves so that operating handwheels or wrenches may be conveniently turned from operating floor but without interfering with access, and as approved by Engineer. Unless otherwise approved, install all valves plumb and level. Valves shall be installed free from distortion and strain caused by misaligned piping, equipment or other causes.

E. Valve boxes shall be set plumb and centered with the bodies directly over the valves so that traffic loads are not transmitted to the valve. Earth fill shall be carefully tamped around each valve box to a distance of 4 feet on all sides of the box, or to the undisturbed trench face, if less than 4 feet.

3.02 SHOP AND FIELD TESTING

A. Shop and field testing of valves shall be as follows:

1. Certified factory testing shall be provided for all components of the valve and operator system. Valves and operators shall be shop tested in accordance with the requirements in the latest revision of AWWA C500, including performance tests,
leakage test, hydrostatic tests, and proof-of-design tests. The manufacturer through the Contractor shall submit certified copies of the reports covering the test for acceptance by the Engineer.

2. Shop testing shall be provided for the operators consisting of a complete functional check of each unit. Any deficiencies found in shop testing shall be corrected prior to shipment. The system supplier through the Contractor shall submit written

certification that shop tests for the electrical/pneumatic system and all controls were successfully conducted and that these components provide the functions specified and required for proper operation of the valve operator system.

3. The Contractor shall conduct field tests to check and adjust system components, and to test and adjust operation of the overall system. Preliminary field tests shall be conducted prior to start-up with final field tests conducted during start-up. The factory service representative shall assist the Contractor during all field testing and prepare a written report describing test methods, and changes made during the testing, and summarizing test results. The service representative shall certify proper operation of the valve operator system upon successful completion of the final acceptance field testing.

4. Preliminary and final field tests shall be conducted at a time approved by the Engineer. The Engineer shall witness all field testing.

5. All costs in connection with field testing of equipment such as energy, light, lubricants, water, instruments, labor, equipment, temporary facilities for test purposes, etc. shall be borne by the Contractor. The Contractor shall be fully responsible for the proper operation of equipment during tests and instruction periods and shall neither have nor make any claim for damage which may occur to equipment prior to the time when the City formally takes over the operation thereof.

6. Preliminary field tests shall be conducted prior to start-up and shall include a functional check of the entire valve operator system and all system components. Preliminary field tests shall demonstrate that the valve operator system performs according to specifications and that all equipment, valves, controls, alarms, interlocks, etc., function properly. The preliminary field test report must be approved by the Engineer prior to conducting final field acceptance tests. Based on results of preliminary field tests, the Contractor shall make any adjustments required to settings, etc., to achieve the required valve closing time and operation specified or otherwise directed by the Engineer.

7. Final field acceptance tests shall be conducted simultaneously with the start-up and field testing of the pumps, air compressors, process air blowers, etc. Field tests shall be conducted for the full range of operating modes and conditions specified and as directed by the Engineer. Each of the valves shall be tested at minimum, maximum, and normal head/flow conditions, and under all specified conditions of opening and closing. Performance of pneumatic valves and compressed air system under normal operating conditions and during simulated power failures shall be checked.

8. Field testing shall include optimization of opening and closing times of the valves. The Contractor shall provide the means for accurate measurement of pipeline pressures as directed by the Engineer. Valve opening and closing times shall be adjusted based on process requirements to optimize operation of the valves. Final valve opening and closing times as determined by field tests shall be approved by the Engineer prior to final acceptance of the system.

- END OF SECTION -

SECTION 15100

VALVE OPERATORS

PART 1 – GENERAL

1.01 THE REQUIREMENT

A. Equipment shall be provided in accordance with the requirements of the Sections entitled "Equipment General Provisions" and "Basic Mechanical Requirements."

B. Valve operators shall be designed to unseat, open or close, and seat the valve under the most adverse operating condition to which the valves will be subjected.

C. Operator mounting arrangements shall be as indicated on the Drawings or as directed by the manufacturer and/or Engineer.

D. The valve operators shall be the full and undivided responsibility of the valve manufacturer in order to ensure complete coordination of the components and to provide unit responsibility.

1.02 SUBMITTALS

A. The following items shall be submitted with the Shop Drawings in accordance with, or in addition to the submittal requirements specified in the Sections entitled "Submittals" and "Equipment General Provisions":

1. Certification that the force required to operate all valves is as specified herein.

1.03 WARRANTY AND GUARANTEE

A. Warranty and Guarantee shall be as specified in the Section entitled "Equipment General Provisions" with the exception that the warranty period shall be, as a minimum, for two (2) years from the date of shipment.

PART 2 – PRODUCTS

2.01 GENERAL

A. Manual operator type shall be as specified herein and as shown on the Drawings.

B. Quarter turn valves 6 inches and greater in size shall have geared operators. Gate valves 14 inches and greater in size shall have geared operators.

C. Operators/actuators shall be furnished with conservatively sized extension bonnets, extension stems, or torque tubes, and all required appurtenances required for a complete installation. Operators furnished with extension bonnets shall include stainless steel extension stems, or stainless-steel torque tubes.

2.02 MANUAL OPERATORS

A. Unless otherwise specified or shown on the Drawings, manual operator type shall be as follows:

1. Buried valves shall be equipped with nut operators, extended stems, and valve boxes.

2. Exposed valves up to 4 inches shall be lever operated (except gate valves).

3. Exposed valves 6 inches and larger shall be handwheel operated.

4. Exposed gate valves shall be handwheel operated.

5. Valves with centerline of operator located more than 6-feet above the floor or platform from which it is to be operated shall have a chainwheel operator unless otherwise indicated on the Drawings.

B. Manual operators shall be rigidly attached to the valve body unless otherwise specified or shown on the Drawings.

C. All operators shall turn counter-clockwise to open and shall have the open direction clearly and permanently marked.

D. Valve operators shall be designed so that the force required to operate the handwheel, lever, or chain (including breakaway torque requirements) does not exceed 80 pounds applied at the extremity of handwheel or chainwheel operator. Design pressures for sizing of valve operators shall be the piping test pressure for the piping in which the valve is to be installed.

E. Handwheels for valves operators shall not be less than 12 inches in diameter. The maximum diameter of any handwheel shall not exceed 24 inches.

F. Nut operators shall have standard 2-inch square AWWA operating nuts designed in accordance with AWWA C504-94.

G. Geared manual operators shall be of the worm gear, traveling nut or scotch yolk type except manual operators for butterfly valves 18-inch in diameter or larger which shall be worm gear, unless otherwise indicated in the individual valve specification. Gear operators shall be of the worm gear or bevel gear type. Gear box designs incorporating end of travel stops in the housing shall be equipped with AWWA input stops. Each gearbox shall require a minimum of 10 turns for 90-degree rotation or full valve stem travel and shall be equipped with a mechanical valve position indicator.

H. Manual operators on below grade (and vault installed) valves shall be permanently lubricated and watertight under an external water pressure of 10 psi.

PART 3 – EXECUTION

3.01 INSTALLATION

A. All valve actuators shall be installed in accordance with the manufacturer's published recommendations and the applicable specification sections for valves, and motor controls.

B. Valve actuators shall be factory coated in accordance with the manufacturer's standard paint system.

3.03 SHOP TESTING

A. Shop testing shall be in accordance with the Section entitled "Equipment General Provisions".

3.04 FIELD TESTS

A. Field testing shall be in accordance with the Section entitled "Equipment General Provisions" and with the following additional requirements:

1. Valve actuators shall be field-tested together with the associated valves.

2. Test all valves at the operating pressures at which the particular line will be used.

- END OF SECTION -

SECTION 15104

BALL VALVES

PART 1 – GENERAL

1.01 THE REQUIREMENT

A. The Contractor shall furnish and install ball valves, complete and operable, as shown and specified herein, including epoxy coating, appurtenances, operators, and accessories, all in accordance with the requirements of the Contract Documents.

1.02 RELATED WORK SPECIFIED ELSEWHERE

A. Section 15095 – Valves, General

1.03 SUBMITTALS

A. Shop Drawings: Submit shop drawings in accordance with the Section entitled "Submittals." The shop drawings shall include the following:

1. Manufacturer's standard literature.
2. Dimension drawings for all valves to be supplied.
3. Valve manufacture's recommended instructions for joining the valves and piping.

B. Operation and Maintenance Manuals: Submit operation and maintenance manuals in accordance with the Section entitled "Submittals."

PART 2 – PRODUCTS

2.01 PLASTIC BALL VALVES

A. Plastic ball valves shall be used at all PVC pipe installations where required and be made of polyvinyl chloride (PVC) or chlorinated polyvinyl chloride (CPVC) as recommended by the Supplier for any specific applications. PVC shall be Class 12454-B or better, conforming to resin specification ASTM D1784. CPVC shall be Class 23447-B or better, conforming to resin specification ASTM D1784. All valves shall have manual operators, unless otherwise specified or shown.

B. All plastic ball valves shall have socket true union ends or flanged ends to ANSI B 16.5, class 150, for easy removal. The balls shall have full size ports and PTFE seats and shall be polished free of any imperfections. PTFE seats shall have elastomeric backing cushion of the same material as the valve seals. All body seals, union O-ring seals, and stem seals shall be Viton or equal. The valves shall be suitable for a maximum working non-shock pressure of 230 psi at 73 degrees F for sizes ½ inch through 2 inches and 150 psi at 73 degrees F for sizes 2½ inch through 6 inch. The handle shall incorporate a tool for adjustment of the seat carrier.

C. Manufacturers: ASAHI-America, IPEX, Plast-o-Matic or equal.

2.02 STAINLESS STEEL BALL VALVES

A. Ball valves for use with stainless steel piping systems, including instrument isolation, air lines, and moisture drains shall be end entry type with Type 316 stainless steel body and trim, Teflon seats and seals and flanged or threaded connections as indicated. Valve body shall be either two- or three-piece design, no internal ring for the ball shall be acceptable. Valves shall be Class 150.

B. Valves shall be supplied with stainless steel manual lever or "T" handle. Valves used as moisture drain valves shall be installed at low points of the line and piped to drain.

C. Manufacturers: Jamesbury Corporation, Jenkins Bros, Lunkenheimer Flow Control, Wm. Powell Company, Worcester Controls or equal.

PART 3 – EXECUTION

3.01 GENERAL

A. All valves shall be installed in accordance with provisions of the Section entitled "Valves, General." Care shall be taken that all valves in plastic lines are well supported on each end of the valve.

B. All valve exteriors shall be painted as specified in the Section entitled “Painting.”

- END OF SECTION -

SECTION 15114

MISCELLANEOUS VALVES AND APPURTENANCES

PART 1 – GENERAL

1.01 THE REQUIREMENT

A. The Contractor shall furnish and install miscellaneous valves as shown and as specified herein, complete and operable including accessories and, where designated, operators, all in accordance with the requirements of the Contract Documents.

1.02 RELATED WORK SPECIFIED ELSEWHERE

A. Section 15095 – Valves, General

PART 2 – PRODUCTS

2.01 GATE VALVES (SMALLER THAN 3 INCHES)

A. Gate valves, smaller than 3 inches, for general purpose use shall be heavy duty type for industrial service, with screwed or soldered ends to suit piping. The bodies shall have screwed tops or union bonnets, of bronze to ASTM B 62, with bronze stems, solid wedges, metal handwheels, and Teflon-impregnated or other acceptable packing. Buried valves shall have non-rising stems. Exposed valves (above ground) shall have rising stems. All valves shall have a minimum pressure rating of 125 psi.

B. Manufacturers:

1. Crane Company
2. Milwaukee Valve Company
3. Wm. Powell Company
4. Or Equal.

2.02 SERVICE SADDLES

A. Service pipe saddle shall fit to the maximum O.D. of the saddle's range, and extend a minimum of 160 degrees around the pipe. When the saddle is used on pipe to the minimum pipe size of the range, the saddle shall extend 180 degrees around the pipe. Straps shall have ends chamfered and be provided with Class 2 fit, National Coarse Threads. Saddle casting shall be ductile iron, double strap and shall have asphaltic coating. Straps shall be stainless steel. Valve gaskets shall be self-sealing, neoprene.

2.03 SEWAGE AIR-VACUUM, AIR-RELEASE VALVES AND COMBINATION VALVES

A. Air-Vacuum Valves: Air and vacuum valves shall be capable of venting large quantities of air while pipelines are being filled and allowing air to re-enter while pipelines are being

drained. They shall be of size indicated, with flanged or screwed ends to match piping. Bodies shall be of high-strength cast iron. The float, seat, and all moving parts shall be constructed of Type 316 stainless steel. Seat washers and gaskets shall be of a material insuring water tightness with a minimum of maintenance. Valves shall be designed for minimum 150-psi water-working pressure, unless otherwise indicated.

B. Air-Release Valves: Air-release valves shall vent accumulating air while system is in service and under pressure and be of the size indicated and shall meet the same general requirements as indicated for air and vacuum valves except that the vacuum feature will not be required. Valves shall be designed for a minimum water-working pressure of 150 psi, unless otherwise indicated.

C. Combination Vacuum Breaker-Air-Release Valves: Combination valves shall function by exhausting small pockets of air accumulated in systems under pressure and re-admitting large quantities of air to relieve a vacuum. Valves shall meet the same general construction requirements as indicated for air-vacuum valves. Valves shall be designed for a minimum working pressure of 150 psi, unless otherwise indicated.

D. Plastic Air-Release Valves: Plastic air-release valves shall be constructed of PVC with EPDM seals and contain no metallic parts. Valves shall have a minimum water-working pressure of 150 psi (at 68^0F).

E. Valve ends shall be 125 lb. ANSI B16.1 flange or 125 lb. ANSI B2.1 threaded fittings depending on locations shown on the Drawings.

F. Manufacturers:

1. APCO (Valve and Primer Corporation), Series 440 SCAV and 400 SARV

2. Crispin (Multiplex Manufacturing Company)

3. Golden-Anderson

4. IPEX (plastic valves only)

5. Val-Matic (Valve and Manufacturing Corporation)

6. Or Equal.

2.04 TAPPING VALVE AND SLEEVE

A. The tapping valves shall conform to the applicable requirements of ANSI/AWWA C500. Valves shall be installed as shown on the Drawings and shall be designed for 150 psi working pressure. Valve body shall be cast iron ASTM A126, Class B or ductile iron ASTM A395 or A536. Valves shall have a bronze trim, double disc, a non-rising stem and parallel or inclined seats. Stem seals shall be neoprene O-rings. The valve shall open counterclockwise and have enclosed bevel gears, track rollers and scrapers and a standard bypass valve. The inlet shall be ANSI sized to match the tapping sleeve. The outlet shall be a mechanical joint connection. The valves shall be as manufactured by Mueller, American, or equal.

B. The Contractor shall verify the material and diameter of the existing lines to be tapped prior to ordering the sleeve. The tapping sleeves for prestressed concrete cylinder pipe shall be in accordance with AWWA M9. The sleeves shall have a separate gland which permits installation of the sleeve prior to cutting of the prestressed wires. The gland shall have an AWWA C213 fusion epoxy coated waterway, and a broad gasket set in a retaining groove of a pressure plate gusseted to eliminate flexing. The gland shall be equipped with load bearing setscrews to protect the cylinder. Grout under the saddle shall be required whether the saddle is epoxy coated or not. The grout shall provide uniform bearing transfer between the rough mortar coating and the saddle. Sleeves shall be furnished with grouting seals and grout horns to facilitate filling the space between the sleeve and the pipe. Tapping sleeve straps, bolts and nuts shall be stainless steel or hot-dip galvanized after fabrication in accordance with ASTM A123 and ASTM A385. All internal threads shall be tapped or re-tapped after galvanizing. The tapping sleeve shall be a Price Brothers Company Tapping Sleeve for prestressed concrete cylinder pipe, or equal.

2.05 CORPORATION STOPS

A. Corporation stops shall be provided with all service saddle connections. Corporation stops shall be O-ring sealed, balance pressure, plug type valves having a full open unobstructed flow way. Corporation stops shall have threaded inlet and outlet connections unless otherwise indicated and shall be suitable for buried service where required. Corporation stops shall be manufactured of brass alloys containing less than 0.25 percent lead.

B. Manufacturers:

1. Ford Meter Box Company

2. James Jones Company

3. Mueller Company

4. Or Equal.

2.06 TAPPING SADDLES

A. Tapping saddles shall fit to the maximum O.D. of the saddle's range, and extend a minimum of 160 degrees around the pipe. When the saddle is used on pipe to the minimum pipe size of the range, the saddle shall extend 180 degrees around the pipe. Straps shall have ends chamfered and be provided with Class 2 fit, National Coarse Threads. Saddle casting shall be ductile iron, double strap and shall have asphaltic coating. Straps shall be stainless steel. Valve gaskets shall be self-sealing, neoprene except for chlorine lines which shall be Viton.

B. Tapping services and line stopping services shall be provided by the following service providers, or equal:

1. Rangeline (http://www.rangeline.com)

2. International Flow Technologies (http://www.hottap.com/index.html)

3. T.D. Williamson, Inc. (http://www.tdwilliamson.com/)

2.07 SOLENOID VALVES

A. Solenoid valves shall be of the size, type, and class shown and shall be designed for not less than 150 psi water-working pressure. Valves for water, air, or gas service shall have forged brass body with female NPT threaded connections, suitable for installation in any position, stainless steel trim and spring, Teflon or other resilient seals with material best suited for the temperature and fluid handled. Solenoid valves in corrosive environment (subject to wastewater and/or chemical areas) shall have stainless steel bodies. For chemicals and all corrosive fluids, solenoid valves with Teflon bodies and springs or other suitable materials shall be used. General purpose enclosures for indoors shall be NEMA type 2. For explosion proof, corrosive, special purpose, or outdoor locations NEMA type 4X, 7, 8, 9, 9E, 9F, or 9G enclosures shall be used, as applicable. All coil ratings shall be for continuous duty. For electrical characteristics see the Electrical Drawings and Specifications.

B. Solenoid valve shall be Automatic Switch Co., Circle Seal Control Inc., Hex Valve, or Equal.

2.08 SMALL PRESSURE REDUCING VALVES (AIR AND WATER)

A. Small air and water pressure reducing valves shall be of the spring-loaded diaphragm type with a minimum pressure rating of 250 psi, with bronze body, nickel alloy or stainless steel seat, and threaded ends. Each valve shall be furnished with built-in or separate strainer and union ends.

B. The supplier shall be Mueller Company or equal.

PART 3 – EXECUTION

3.01 INSTALLATION

A. All valves shall be installed in accordance with the manufacturer's printed recommendations.

B. All valves shall have piped outlets to the nearest acceptable drain, firmly supported, and installed in such a way as to avoid splashing and wetting of floors.

- END OF SECTION -

SECTION 15202

FLAP GATES

PART 1 – GENERAL

1.01 THE REQUIREMENT

A. The Contractor shall furnish and install heavy duty flap gates, complete and operable, as shown and specified herein, including coating, appurtenances, and accessories, all in accordance with the requirements of the Contract Documents.

1.02 RELATED WORK SPECIFIED ELSEWHERE

A. Section 15095 – Valves, General

1.03 SUBMITTALS

A. Shop Drawings: Submit shop drawings in accordance with the Section entitled "Submittals." The shop drawings shall include the following:

1. Manufacturer's standard literature
2. Dimension drawings for all valves to be supplied
3. Manufacturer's recommended instructions for joining the valves and piping
4. Factory test report for hydrostatic testing

B. Operation and Maintenance Manuals: Submit operation and maintenance manuals in accordance with the Section entitled "Submittals."

PART 2 – PRODUCTS

2.01 FLAP GATES

A. Body shall be Grade 300 High Density Polyethylene. All non-HDPE parts shall be Type 316 stainless steel. All flap gates above 24 inches in diameter shall be reinforced. All valves shall be hydrostatically tested at the factory prior to shipment.

B. Flap gates shall have flanged ends similar to Class 125 per ASME B16.1 for mounting at pipe ends. Angled extension tubes shall be provided where shown on the Drawings. All flap gates provided for pump discharges shall include an air bleed connection at the top of the gate.

C. All mounting hardware required for flap gate installation shall be provided by the manufacturer.

D. Manufacturers: Ross Valve Series 70HFV or equal.

PART 3 – EXECUTION

3.01 GENERAL

A. All valves shall be installed in accordance with provisions of the Section entitled "Valves, General." Care shall be taken that all valves in plastic lines are well supported on each end of the valve.

B. All valve exteriors shall be painted as specified in the Section entitled “Painting.”

- END OF SECTION -

SECTION 15500

BASIC HVAC REQUIREMENTS

PART 1 – GENERAL

1.01 THE REQUIREMENT

A. The Contractor shall furnish all labor, equipment and material for the complete installation of the heating, ventilation, air conditioning, piping, etc. as indicated on the drawings and specified herein.

B. Air conditioning systems shall be furnished and installed to operate as a system. The Contractor shall coordinate all requirements between manufacturers to insure unit responsibility and compatibility of the systems.

1.02 SUBMITTALS

A. The Contractor shall submit shop drawings on all equipment, accessories and appurtenances and all fabrication work or other mechanical and air conditioning work required, all in accordance with the requirements of Section 01300, Submittals.

B. Data to be submitted shall include but not be limited to:

1. Catalog data consisting of specifications, illustrations and a parts schedule that identifies the materials to be used for the various parts and accessories. The illustrations shall be in sufficient detail to serve as a guide for assembly and disassembly.

2. Complete assembly, and installation drawings with clearly marked dimensions. This information shall be in sufficient detail to serve as a guide for assembly and disassembly and for ordering parts.

3. Weight of all component parts and assembled weight.

4. Electrical characteristics, wiring, diagrams, etc.

5. Sample data sheet of equipment nameplate(s) including information contained thereon.

6. Insulation materials, coating, jackets, detail density, thermal conductivity and thickness of all insulation materials to be furnished.

7. Details of special fasteners and accessories.

8. Type of adhesives, binders, joint cement, mastics.

9. Proposed insulation procedures and installation methods.

10. Spare parts list

11. Special tools list

C. The Contractor shall obtain from the manufacturer and submit to the engineer copies of the results of all certified shop tests.

D. The Contractor shall obtain from the manufacturer and submit to the engineer copies of certified letters of compliance in accordance with the Specifications.

1.03 OPERATION AND MAINTENANCE MANUALS

A. The Contractor shall submit operation and maintenance manual in accordance with the procedures and requirements set forth in the General Conditions and Division 1.

B. Operation and Maintenance Manuals shall be submitted for all equipment.

1.04 MANUFACTURER'S INSTRUCTIONS

A. Installation of all equipment shall be in accordance with manufacturer's data.

B. All changes from the installation procedures in manufacturers' data shall be submitted for approval in accordance with the requirements for shop drawings.

C. Keep all manufacturers' data provided in a secure manner at the job site at all times. Catalog and index this data for convenient reference.

D. Manufacturers' data shall be available for the information of the Owner, Engineer, and the use of other trades.

E. Turn over all data to the Owner through the Owner's representative at completion of the Work and final testing.

F. Furnish Owner indexed and bound in loose leaf binders, three (3) complete sets of Operating and Maintenance Instructions and pertinent manufacturers' literature and information on all of the apparatus and equipment under this Division of the Specifications.

G. Submit all instruction books and manuals in accordance with Division 1.

1.05 CODES, PERMITS AND STANDARDS

A. The Contractor shall obtain and pay for all permits and shall comply with all laws and codes that apply to the Work.

B. The Contractor shall be responsible for all added expense due to his choice of equipment, materials or construction methods.

C. All work and materials shall be in full accordance with the latest State rules and regulations or publications including those of the State Fire Marshall, and all local codes. Nothing in

the Plans and/or Specifications shall be construed to permit work not conforming to the above codes, rules and regulations.

D. All equipment, materials and installations shall conform to the requirements of the most recent edition with latest revisions, supplements and amendments of the following, as applicable:

Air Conditioning and Refrigeration Institute (ARI)

Air Diffusion Council (ADC)

Air Moving and Conditioning Association (AMCA)

American Society of Heating, Refrigerating and Air Conditioning Engineers, Inc. (ASHRAE)

American National Standards Institute (ANSI)

American Society for Testing and Materials (ASTM)

American Society of Mechanical Engineers (ASME)

Factory Mutual (FM)

National Electric Code (NEC)

NFPA 90A - Air Conditioning and Ventilation Systems

Occupational Safety and Health Standards (OSHA)

Sheet Metal & Air Conditioning Contractors National Association (SMACNA)

Florida Building Code – 2016 edition

Florida Mechanical Code – 2016 edition

Florida Plumbing Code – 2016 edition

State and local codes, ordinances and statutes

Underwriters Laboratories (UL)

Others as designated in the specifications.

1.06 QUALITY ASSURANCE

A. All material and equipment shall be the latest design, new, undeteriorated, and the first quality standard product of manufacturers regularly engaged in the production of such material and equipment.

B. When two or more units of the same class of material or equipment are required, they shall be products of a single manufacturer.

C. All work shall be performed in a neat and workmanlike manner by workers skilled in their respective trades, and all materials and equipment shall be installed as recommended by the manufacturers and in accordance with specified codes and standards.

D. Touch up and/or repaint to match original finishes all factory finished or painted equipment and materials which are scratched or marred during shipment or installation.

1.07 IDENTIFICATION MARKERS

A. Provide manufacturer's standard laminated plastic, color coded duct markers. Conform to the following color codes:

Yellow/Green:	Supply air
Blue:	Exhaust, outside, return and mixed air
Nomenclature:	Include the following: Direction of air flow. Duct service (supply, return, exhaust, etc.)

1.08 GASKETS AND CONNECTORS

A. Provide new gaskets wherever gasketed mating equipment items or pipe connections have been dismantled. Gaskets shall be in accordance with manufacturer's recommendations.

B. Replace all assembly bolts, studs, nuts and fasteners of any kind which are bent, flattened, corroded or have their threads, heads or slots damaged.

C. Furnish all bolts, studs, nuts and fasteners for make-up of all connections to equipment and replace any of these items damaged in storage, shipment or moving.

PART 2 – PRODUCTS

2.01 GENERAL

A. Each item of equipment shall be furnished and installed complete with all supports, mounting frames, duct work, piping, louvers, panels, grilles, electric drive units and controls, mechanical equipment, electrical work, insulation and appurtenances ready for operation.

B. All equipment and appurtenances shall be anchored or connected to supporting members as specified or as indicated on the Plans.

C. All mechanisms or parts shall be amply proportioned for the stresses which may occur during operation or for any other stresses which may occur during fabrication and erection. Individual parts furnished which are alike in all units shall be alike in workmanship, design, and materials and shall be interchangeable. All equipment shall be of the manufacturer's top line, industrial/commercial grade.

D. The Contractor shall ascertain that all chassis, shafts, and openings are correctly located, otherwise he shall cut all new openings required at his own expense. Cutting of new openings shall be coordinated with other trades. Proposed new cutting shall be submitted to the Engineer for review and acceptance prior to cutting.

E. The Plans shall be taken as diagrammatic. The Contractor shall check the Structural Plans and sections for detail dimensions and clearances. Sizes of ducts and their locations are indicated, but not every offset, fitting, or structural obstruction is shown.

F. Alignment of ducts may be varied where necessary to account for slight architectural changes or to avoid conflict with the Work of other trades without additional expense to the Owner.

G. All supports required for the proper installation of the equipment, but not forming an integral part of the building structure, shall be provided, unless specifically noted otherwise. Equipment shall be supported on spring-type vibration isolators.

PART 3 – EXECUTION

(NOT USED)

- END OF SECTION -

SECTION 15553

HVAC COPPER AND BRASS PIPE

PART 1 – GENERAL

1.01 SECTION INCLUDES

A. The Contractor shall provide copper and brass pipe and fittings as indicated. This section includes all copper and brass pipe and fittings, including all insulation, painting and related work as shown on the Contract Drawings, specified in the Specifications or required for a complete installation.

1.02 RELATED SPECIFICATIONS

A. Section 15000 – Basic Mechanical Requirements

1.03 PAYMENT

A. Payment will be made as provided for in the Specifications.

B. No direct payment will be made for painting, insulation and testing pipelines or for gaskets, bolts, nuts and other appurtenances and material required to erect the lines; the costs thereof shall be included in the prices bid for the pipe.

1.04 REFERENCES

A. ASTM B16 – Free-Cutting Brass Rod, Bar and Shapes for Use in Screw Machines.

B. ASTM B32 – Solder Metal.

C. ASTM B42 – Seamless Copper Pipe, Standard Sizes.

D. ASTM B43 – Seamless Red Brass Pipe, Standard Sizes.

E. ASTM B61 – Steam or Valve Bronze Castings.

F. ASTM B62 – Composition Bronze or Ounce Metal Castings.

G. ASTM B88 – Seamless Copper Water Tube.

H. ASTM B124 – Copper and Copper Alloy Forging Rod, Bar and Shapes.

I. ASTM B251 – Wrought Seamless Copper and Copper-Alloy Tube.

J. ASTM B280 – Seamless Copper Tube for Air Conditioning and Refrigeration Field Service.

K. ASTM B302 – Threadless Copper Pipe.

L. ASME B1.20.1 – Screw Threads – Pipe Threads, General Purpose (Inch).

M. ASME B16.15 – Cast Bronze Threaded Fittings, Classes 125 and 250 (Includes Revisions Service).

N. ASME B16.18 – Cast Copper Alloy Solder Joint Pressure Fittings (Includes Revision Service).

O. ASME B16.22 – Wrought Copper and Copper Alloy Solder-Joint Pressure Fitting (Includes Revision Service).

P. ASME B16.24 – Cast Copper Alloy Pipe Flanges and Flanged Fittings Class 150, 300, 400, 600, 900, 1500 and 2500.

Q. MSS SP-58 – Pipe Hangers and Supports – Materials, Design, and Manufacture.

R. MSS SP-69 – Pipe Hangers and Supports – Selection and Application.

S. MSS SP-89 – Pipe Hangers and Supports – Fabrication and Installation Practices.

T. ASME Code, Section VIII, Appendix bb.

1.05 DESIGN REQUIREMENTS

A. Copper and brass pipe and fittings shall conform to the latest Building Code of the State of Florida in respect to plumbing and other applications covered by these laws.

B. Copper and brass pipe shall conform to the latest standards of the American Society for Testing and Materials (ASTM), the American National Standards Institute (ANSI), the American Society of Mechanical Engineers (ASME), the Copper and Brass Research Association (CABRA), the Society of Automotive Engineers (SAE), the Manufacturer's Standardization Society (MSS), the American Welding Society (AWS), and National Pipe Thread (NPT).

1.06 DELIVERY, STORAGE AND HANDLING

A. Deliver, store and handle all products and materials as specified in Division 1 of the Specifications.

PART 2 – PRODUCTS

2.01 MANUFACTURERS

A. The following manufacturers are acceptable. Equivalent products from other manufacturers may be submitted for approval.

B. Copper Pipe and Fittings:

1. Pipe and Fittings:

a. Mueller Industries, Inc., Wichita, KS.

b. IBCO, Elkhart, IN.

c. Or equal.

2. Flared Tube Fittings:

a. Parker Hannifin Corp., Triple-Lok Fittings.

b. NIBCO, Elkhart, IN.

c. Or equal.

C. Brass Pipe and Fittings:

1. Metalloy Industries, Inc., Alachua, FL.

2. NIBCO, Elkhart, IN.

3. Or equal.

D. Wall Sleeve Annular Seals:

1. Thunderline Corp. (Link-Seal), Belleville, MI.

2. The Metraflex Corporation, Metraseal, Chicago, IL.

3. Flexicraft Industries (The Pipe Seal), Chicago, IL.

4. Or equal.

E. Insulation:

1. Armstrong World Industries, Inc.

2. Rubatex Corp.

3. Or equal.

2.02 PIPE MATERIALS

A. Copper Pipe and Fittings

1. Refrigeration Piping: For refrigeration copper pipe, provide type ACR seamless, round, hard drawn copper tubing that meets ASTM B280 requirements. The pipe shall be delivered to the site clean, charged with nitrogen, and sealed. Provide tube sizes, dimensions and wall thickness conforming to ASTM B280 for Type ACR tubing, unless otherwise specified. Provide nominal lengths of hard copper tubing in straight lengths of approximately 20 feet, unless otherwise specified.

a. Fittings: For copper tubing, use brazed joint socket type fittings, as specified. No bending of hard copper tubing will be permitted, unless otherwise specified; make all bends and connections with suitable fittings.

i. Braze Joint Fittings: Provide ASME B16.18, cast copper alloy or ASME B16.22 wrought copper and copper alloy fittings. Braze joint fittings and tubing in conformity with the specifications of Section 3 of the CABRA Copper Tube Handbook. Brazing alloy shall be

copper-phosphorus alloy, Class BCuP-5, as specified by American Welding Society Spec. AWS A5.8.

2. Drain Copper Piping: For drain copper pipe, provide type L seamless, round, hard drawn copper tubing that meets ASTM B88 requirements. Provide tube sizes, dimensions and wall thickness conforming to ASTM B88 for Type L tubing, unless otherwise specified. Provide nominal lengths of hard copper tubing in straight lengths of approximately 20 feet, unless otherwise specified.

   a. Fittings: Provide solder type fittings of the same material as the pipe.

   b. Joints: Use ASTM B32 alloy Grade 95TA (95 percent tin and 5 percent antimony) solder for piping.

3. Potable Water Piping: Use ASTM B32 alloy Grade 95TA (95 percent tin and 5 percent antimony) solder for piping carrying potable water.

4. Unacceptable Uses: Do not use copper pipe with soldered joints for transporting fuel oil or other flammable or toxic liquids inside buildings.

B. Wall Sleeves

1. Unless otherwise shown or specified, furnish and install suitable pipe sleeves at all points where pipes pass through walls or floors of structures. Sleeve material shall be steel unless indicated otherwise on the Contract Drawings or specified in the Specifications.

C. Wall Sleeve Annular Seals

1. Where pipes pass through walls, partitions or floors where fire-rated construction is not required, provide modular mechanical type seals consisting of interlocking synthetic rubber links shaped to continuously fill the annular space between the pipe and the wall sleeve. Provide an elastomeric element that is of the size, quantity, type and material that the manufacturer recommends for the intended service and that will provide an effective hydrostatic seal. Bolts and nuts shall be stainless steel. Wall sleeve annular seals shall be approved equal to those manufactured by the companies listed in Paragraph 2.01.D.

2. For all penetrations through fire-rated walls, partitions and floors, provide a permanent fire stop system. The fire stop system shall maintain the integrity of the wall or floor system for the rated time period and shall allow normal pipe movement without being displaced. The fire stop system shall be intumescent when exposed to flame or heat. Asbestos shall not be used as fire stop material.

D. Corrosion Resistant Coating

1. All copper pipe shall receive a corrosion resistant coating. For piping that receives insulation, the coating shall be applied and allowed to cure per the manufacturer's instructions prior to insulating.

2. Coating shall be a field applied Bronz-Glow's SPC-Clear coating, Incralac or approved equal. The coating shall be specifically listed for use on copper pipe for the protection from corrosion due to hydrogen sulfide and shall be UV resistant.

2.03 INSULATION MATERIALS

A. Insulation shall be flexible elastomeric type, closed cell, cylindrical or sheet type as required by the application. Flexible elastomeric insulation shall have a thermal conductivity not exceeding 0.27 BTU per hour per square foot per degree F per inch thickness at 75 degrees F mean temperature. Water absorption shall be less than 5% (ASTM D 1056). Water vapor permeability shall not exceed 0.10 perms per inch in accordance with ASTM E 96 Procedure A. The insulation shall meet the requirements of ASTM C534 and ASTM D 1056. The insulation shall have a flame spread rating of less than 25 and a smoke development of less than 50 per ASTM-E84.

B. Joints and Seams: All joints shall be cut straight and butted with no gaps. Seal all joints with the manufacturer's recommended adhesive.

C. Fittings, flanges and valves:

1. Seams and mitered joints shall be adhered using the manufacturer's recommended adhesive. Screwed fittings shall be sleeved and adhered with a minimum one-inch overlap onto the adjacent insulation.

2. Flanges, strainers, couplings, and valves shall be insulated using donuts, then covered with sheet or oversize tubular insulation.

D. Jacket:

1. All insulated copper pipe, fittings, and appurtenances shall receive an anodized aluminum jacket.

2. The jacket shall be a minimum of 0.016" thick.

3. The jacket shall be secured using latching metal straps.

2.04 CONDENSATE DRAIN PIPE

A. Poly (Vinyl Chloride) Pipe and Fittings:

1. Pipe: Drain, waste and sanitary pipes and fittings shall be DWV Schedule 40 PVC, ASTM D2665.

2. Joints: Chemical weld with manufacturers recommended solvent.

PART 3 – EXECUTION

3.01 INSTALLATION

A. General: Install all pipe and fittings in accordance with this Specification and as shown on the Contract Drawings, and in accordance with the manufacturer's recommendations and approved shop drawings.

B. Connections Between Dissimilar Metals in Pipes: Where connections are to be made between pipelines or equipment of dissimilar metals, make the connections using dielectric insulating couplings, unions or other approved dielectric insulating devices.

C. Connections Between Dissimilar Metals in Supports: Where contact between dissimilar metals between pipes and supports, or supports and the structure occur, the site of the contact shall be suitable protected using a dielectric media to prevent the contact between the surfaces such as a neoprene pad.

D. Pipe Lengths: Full standard lengths of pipe shall be used in each pipe run in so far as possible. Shorter lengths than standard shall be used only to complete a straight run of pipe, to connect to established locations of valves, equipment, bends, and the like. Random lengths of pipe or cuttings from standard lengths shall not be coupled together when a full standard pipe length will fit in the pipe run.

E. Piping for refrigeration shall remain charged with nitrogen and sealed until it is installed. The Contractor shall take precautions to ensure that the pipe is clean and free from debris.

F. The Contractor shall provide a flow of nitrogen through the piping and fittings during brazing to prevent the formation of scale.

G. Reducing Fittings: Use reducing fittings for all changes in pipe size. Do not use bushings.

H. All copper piping shall receive a corrosion resistant coating. The coating shall be applied within 24 hours of the pipe passing the leak test. The copper pipe shall be thoroughly cleaned prior to application of the coating. At a minimum, the pipe shall be free of all signs of corrosion, oils, flux, and other substances that will hinder proper application of the coating. The Contractor shall follow all cleaning and pipe preparations required by the coating Manufacturer.

I. All refrigeration piping and all interior condensate piping shall be insulated with 1.5” of elastomeric insulation and provided with an aluminum jacket. The insulation shall be applied after the corrosion coating has fully cured as indicated by the coating manufacturer.

J. Pipe Flexibility

1. Make ample provisions for flexibility in all pipelines.

2. Install branch tees on risers in locations that will allow the branch lines, when expanded by heat, to drain properly.

3. Unless other forms of expansion compensation are specified, such as expansion joints, fabricate all runs of pipe subject to change in length shorter than their theoretical length to the extent of one half of the expansion and erect them such that they may be free to expand without increasing the stresses imposed when cold.

4. When the foregoing method of compensation for expansion is not adequate, furnish and install in the pipelines expansion devices adequate to allow the lines to expand and contract freely without injury to any part of the piping system. The devices may be in the form of expansion joints, swivel joints, swing joints, pipe

bends or flexible couplings, and shall include such anchors as may be shown or required to make the devices effective. A sufficient number of fittings and pipe lengths shall be used in connection with swing joints to assure the absence of distortion of either the pipelines or branches. Application guide and anchor requirements for expansion joints shall be in accordance with the recommendations of the manufacturer or the Standards of the EJMA.

K. Venting

1. Each high point in liquid lines shall be provided with a vent consisting of an automatic air release/vacuum relief valve and an outlet vent line. The automatic valve and vent line for pipelines up to and including 1-inch size shall be the same size as the carrier pipe. In larger carrier pipes, the valve and vent line shall be of the size given in the Specifications, but not smaller than 1 inch. The automatic valve shall have a cast or ductile iron body and cover, stainless steel internals, and Viton or Buna N seal, unless otherwise specified. The outlet vent line from the valve shall be Schedule 80 CPVC and shall terminate at a point approximately 3 feet above the floor. A bronze ball valve shall be provided between the carrier pipe and the automatic valve to allow removal of the automatic valve for repair or replacement.

2. Where vent valves are so located that liquids discharged therefrom would cause damage to structure or equipment, the vent shall be piped to the nearest gutter or drain in an approved manner.

L. Drainage

1. Each low point in liquid lines shall be provided with not less than a 1-inch drain line. A bronze ball valve shall be provided at the connection to the carrier pipe and at the terminus approximately 3 feet above the floor. A quick connect coupling shall be provided at the end of the drain line for attachment of a hose. The drain line shall be Schedule 80 CPVC.

M. Hangers and Supports: Furnish and install all supporting devices. The hangers and supports shall conform to the requirements of MSS SP-58, 69, and 89.

N. Drip Pans: Provide drip pans under all metallic pipelines installed over electrical equipment and motors to conduct drainage to the nearest floor drain, gutter or other drainage system with 3/4-inch red brass pipe. Make the connection between the drip pan and the brass drainpipe leaktight, and pitch the drip pan uniformly toward the drain pipe at a slope not less than 1/8-inch per lineal foot.

O. Pipe identification signs and valve identification numbers shall be furnished and installed in conformity with Section 15030 – Piping and Equipment Identification Systems.

3.02 CLEANING AND TESTING

A. Cleaning: During construction, clean all piping before placement and keep the lines free from every kind of foreign matter. All pipelines shall be left thoroughly clean to the satisfaction of the Engineer. Flush all process and potable water pipelines with clean water.

B. Test all pipelines for leakage in conformance with Section 15000 – Basic Mechanical Requirements.

C. Refrigerant piping must be tested before any piping is insulated, coated, or concealed. The entire refrigerant circuit must be thoroughly tested to be sure that it is absolutely tight. The system shall be tested with oil pumped dry nitrogen. The low side of a 410a system shall be tested at 375 psig and the high side at 420 psig. Other refrigerant test pressures shall match the respective test pressures used by the manufacturer of the evaporator and condenser coils. All pipe joints shall be tapped sharply with a rubber mallet and tested for leaks with a soap solution. After all leaks have been repaired, the system shall be charged with a small quantity of refrigerant and the entire system shall be checked with a detector suitable for the type of refrigerant. Once the system is found tight, it shall be allowed to stand for 6 hours with the pressure on. If any pressure drop occurs, except those due to changes in ambient temperature, the entire system shall be retested. The system shall be evacuated with a vacuum pump to a minimum vacuum of 1 mm Hg absolute is achieved or as prescribed by the equipment manufacturer, whichever is more stringent. Under no circumstances shall the compressor be used to evacuate the system. After evacuation, the system shall be allowed to stand for 12 hours. If no noticeable rise in pressure occurs, the system shall be charged.

D. Condensate piping shall be tested under pressure of a filled line. The discharge shall be temporarily plugged, and the line filled with clean water. All joints shall be visually inspected. Any leaks shall be corrected and the line retested. Condensate piping located outside shall not be tested when the temperature is below freezing.

3.03 DISINFECTION

A. Disinfect all potable water pipelines in accordance with Section 15000 – Basic Mechanical Requirements.

- END OF SECTION -

SECTION 15598

METALLIC DUCTWORK AND DUCT ACCESSORIES

PART 1 -- GENERAL

1.01 THE REQUIREMENT

A. The Contractor shall furnish and install all ductwork, fittings, and accessories as shown on the Drawings and in accordance with the Specifications.

B. The equipment shall be furnished complete with all accessories, special tools, base attachments, mountings, anchor bolts and other appurtenances as specified or as may be required for a complete installation.

1.02 RELATED WORK SPECIFIED ELSEWHERE

A. Section 15500 - Basic HVAC Requirements

B. Section 15990 – HVAC Testing, Adjustment, and Balancing

1.03 SUBMITTALS

A. The Contractor shall submit shop drawings on all new and modified ductwork, accessories and appurtenances and all fabrication work required for all equipment specified in this section in accordance with Section 01300, Submittals.

B. The Contractor shall submit shop drawings for supports for new and modified ductwork. The shop drawings shall locate and identify each support, brace, hanger, guide, component and anchor. Ductwork support systems shall be designed, and Shop Drawings prepared and seal by a Registered Professional Engineer of the State of Florida and shall comply with Section 01350, Seismic Anchorage and Bracing.

C. The Contractor shall submit shop drawings for support of multi-section dampers and louvers. The shop drawings shall identify all supports and reinforcement required to allow the multi-section dampers and louvers to be rated for the maximum pressure of the individual damper and louver sections. The support system shall be designed, and calculations prepared and sealed by a Registered Professional Engineer of the State of Florida.

1.04 WARRANTY AND GUARANTEE

A. Warranty and Guarantee shall be as specified in Section 11000 with the exception that the warranty period shall be for two (2) years.

PART 2 -–– PRODUCT

2.01 GENERAL REQUIREMENTS

A. All work shall be constructed and installed in a first class workmanlike manner in accordance with the recommendations given in the latest edition of the Sheet Metal & Air Conditioning Contractors National Association (SMACNA) HVAC Duct Construction Standards and Round Industrial Duct Construction Standards, unless otherwise specified.

B. All ductwork shall be constructed in accordance with the Schedule of Duct Construction Standards listed on the last page of this section. Transverse duct connections shall be bolted, gasketed connections.

C. All ducts shall conform accurately to the dimensions indicated on the Drawings, shall be straight and smooth on the inside with neatly finished joints, and shall not be decreased at any point to avoid obstructions. No piping, conduit or structural work shall be installed in or through any ductwork. All ductwork shall be run as close as possible to structural members, walls and ceilings. Duct work shall be as shown on the drawings, subject to such modifications as may be necessary to suit field conditions.

D. Where existing walls, floors or roofs must be penetrated, the Contractor shall neatly cut the required openings and patch the existing work to provide a neat and finished appearance.

E. All ducts shall be made reasonably tight throughout and shall have no openings other than those required for the proper operation and maintenance of the systems.

F. Minimum thickness for metal ducts shall be per SMACNA guidelines, but in no instance shall be less than 20 gauge for steel ducts and 14 gauge for aluminum ducts.

G. Supports for ducts shall be provided and securely fastened in place at every change in direction and as required to prevent deflection.

H. Changes in size of ducts shall be by means of a taper transformation piece, the included angle of the taper being not more than 30 degrees.

I. All duct work joints shall be sealed to achieve a SMACNA Seal Classification Rating as indicated in the ductwork schedule of this specification.

J. The weight of material used for ducts and stiffeners, the fabrication methods, cross breaking of flat duct surfaces, and assembling of the ductwork shall conform to the Duct Manual and Sheet Metal Construction for Ventilating and Air Conditioning Systems published by the Sheet Metal and Air Conditioning Contractors National Association, Inc. Beaded duct construction shall not be used.

K. All duct panels shall be braced or reinforced as necessary, in addition to the minimum requirements in the ASHRAE Guide, to eliminate vibration and noise and to prevent deflection from the indicted shapes and dimensions.

2.02 STAINLESS STEEL AND ALUMINUM DUCT

A. Ductwork material shall be as indicated in the duct schedule in Part 3 of this specification.

B. Stainless Steel: ASTM A480/A480M, Type 316 having a number 2D finish for all applicable ducts and of adequate strength and rigidity to meet the conditions of the service and installation requirements and shall be properly protected where subject to mechanical injury.

C. Aluminum: ASTM B209, alloy 1100, 3003, or 5052 for all applicable ducts and of adequate strength and rigidity to meet the conditions of the service and installation requirements and shall be properly protected where subject to mechanical injury.

D. Transverse duct connections for rectangular ducts shall be bolted, gasketed connections made with standard Ductmate 35 System as manufactured by Duct Mate Industries, W.D.C.I. or approved equal. All longitudinal seems shall be Pittsburg Z, or better. Duct flange system material shall match the duct material. Gaskets shall be suitable for exposure to hydrogen sulfide 2ppm.

E. Transverse duct connections for round ducts shall be bolted, gasketed connections in accordance with chapter 12 of SMACNA Round Industrial Duct Construction Standards. Duct connections shall be the same material as the duct. Utilize longitudinal seam ductwork. Gaskets shall be suitable for exposure to hydrogen sulfide 2 ppm and outdoor use.

F. All ductwork shall be shop fabricated in sections with flanged ends. The Ductmate 35 flange system shall be factory spot welded to the ductwork. No field welding of ductwork shall be permitted. Welding equipment and electrodes shall be of a type specifically suited for welding light gauge 316 stainless steel or aluminum, as applicable, to provide consistently good quality welds.

G. All duct sections shall be constructed and installed without forming dips and traps.

H. All ducts shall have a minimum clearance of three (3) inches from all combustible material.

2.03 HANGERS AND SUPPORTS

A. All ductwork shall be securely hung and anchored to the building structure. Unless otherwise shown or specified, hangers and stiffeners for ducts shall conform with the recommendations given in the SMACNA HVAC Duct Construction standards and SMACNA seismic restraint manual. Ducts shall be supported on trapeze hangers consisting of angles and rods. Use of strap hangers and straps is prohibited.

B. All hangers, rods, supports, bolts, nuts, washers, inserts, and appurtenances shall be constructed of the same material as the ductwork that it supports.

C. All ductwork shall be supported from trapeze type hangers. Stainless steel hanger rods shall be minimum 3/8 inch for all ducts with half perimeter up to 72 inches, and ½ inch

diameter for all ducts with half perimeter larger than 72 inches. Aluminum hanger rods shall be of sufficient diameter to achieve the equivalent strength of the stainless-steel hanger rods for the sizes indicated. A pair of rods shall be provided at each duct support point. Maximum hanger spacing shall be 8 feet for ducts with half perimeter up to 72 inches and 6 feet for ducts with half perimeter larger than 72 inches.

D. Hanger Construction and installation shall conform to SMACNA Standards, except as specified. No sheet metal duct hangers or straps will be allowed.

E. Support shall be furnished at each fitting. Material of supports shall match duct material.

F. Seismic & Wind Requirements: All ductwork shall be provided with seismic and wind restraints in accordance with the Seismic Restraint Manual, Guidelines for Mechanical Systems, as published by SMACNA, in accordance with the Florida Building Code, the indicated design wind speed, and ASCE-7 to the extent that the most stringent provisions are utilized. Material of seismic and wind restraints shall be as specified herein. A calculation signed and sealed by a Professional Engineer of the State of Florida shall be provided verifying that the installed supports meet the seismic and wind requirements. See section 01350, Seismic Anchorage and Bracing and the Structural Design Drawings for additional details and requirements.

2.04 ACCESSORIES

A. Manual Volume & Backdraft Dampers in Rectangular Stainless Steel or Aluminum Duct:

1. Manufacturer: Provide products of one of the following:

   a. Greenheck

   b. Ruskin

   c. Nailor

   d. or equal

2. Frame, blade, axle, bearings, jamb seal, and linkage materials: Match ductwork.

3. Blades:

   a. Opposed blades for volume dampers and parallel blades for backdraft dampers;

   b. Vinyl edge seals, thermoplastic elastomer seals for corrosive/chemical services.

4. Damper shafts shall be solid hexagonal or square shape.

5. Linkage shall be concealed in damper frame.

6. Provide outside handle, quadrant and approved position indicator and locking device on volume dampers.

7. Reference: SMACNA Standards.

B. Registers and Grilles:

1. Manufacturer: Provide product(s) of one of the following:

   a. Titus (Basis of Design, model numbers scheduled on drawings)

   b. Anemostat

   c. Price Industries

   d. Nailer Industries, Inc.

   e. Hart and Cooley.

2. Units shall be factory-fabricated of Type 316 stainless steel construction for stainless steel and FRP ductwork and aluminum for aluminum ductwork. They shall distribute the specified air volume (cubic feet per minute).

3. Outlets for diffusion, spread, throw, and noise level shall be as required for specified performance.

4. Diffusers and registers shall be provided with volume damper with accessible operator, unless otherwise indicated; or if standard with the manufacturer, an automatically controlled device will be acceptable. Volume dampers shall be opposed blade type for all diffusers and registers.

5. Registers shall be provided with sponge-rubber gasket between flanges and wall or ceiling.

6. An additional volume damper shall be installed in duct stub to each air outlet for balancing of air volume.

7. Supply Registers:

   a. Supply registers shall be double deflection type, complete with adjustable vertical face bars and a key operated opposed blade damper.

8. Air extracting devices shall be installed at all collar take-offs to supply registers. The air extracting devices shall have two sets of individually adjustable blades to equalize flow and control volume at collar takeoffs and shall be gasketed around the perimeter.

9. Exhaust and Return Registers and Grilles:

a. Exhaust and return registers shall be furnished with fixed vertical face bars, set straight, and a key operated opposed blade damper.

C. Duct-Mounted Access Doors and Panels:

1. Provide access doors at all duct connections dampers for access and maintenance of damper motor actuators and linkages.

2. Fabricate doors and panels airtight and suitable for duct pressure class.

3. Seal around frame attachment to duct and door to frame with neoprene.

4. Door and frame to be of same material as duct.

D. Flexible Connectors unless indicated otherwise shall meet the following requirements:

1. Self-extinguishing material shall meet NFPA 90A, NFPA 701 and UL-214 Standards.

2. Material:

a. Commercial grade neoprene coated woven fiberglass, Proflex by DUCTMATE, or approved equal.

b. Corrosion/chemical resistant applications shall be of Teflon coated woven fiberglass fabric. Minimum density 18 oz./sq. yd. and rated to 500 F.

3. Extra wide edge connectors factory fabricated with a strip of fabric. Material of connectors shall match duct material.

E. Instrument Test Holes: Material to suit duct material, including screw. Size holes to allow insertion of pitot and other testing instruments, and length to suit duct insulation thickness.

F. Turning Vanes:

1. Turning vanes shall be double wall turning vanes fabricated from the same material as the duct. Mounting rails shall have friction insert tabs that align the vanes automatically.

2. Tab spacing shall be as specified in Figure 2-3 of the 1995 SMACNA Manual, “HVAC Duct Construction Standards, Metal & Flexible” Second Edition standard. Rail systems with non-standard tab spacing shall not be accepted.

3. Due to tensile loading, vanes shall be capable of supporting 250 pounds when secured according to the manufacturer’s instructions.

G. Drip Pans

1. Drip pans shall be welded 16-gauge, type 316 Stainless Steel.

2. Drip pans shall extend 2” beyond the dimensions of the equipment of ductwork above on all sides.

3. Drip pan shall have a minimum 1” lip.

4. Drip pan shall be sloped to a ¾” copper type L drain line such that pooling or standing water is prevented. The drain shall be continuously sloped a minimum of 1/8” per foot. The drain shall terminate 6” above the sink or nearest floor drain.

5. Provide a dielectric coupling between the stainless-steel drip pan and copper drain line to prevent contact between dissimilar metals.

6. Contractor shall coordinate drip pan supports with the existing structural construction above. The Contractor shall provide all supplemental beams and channels needed. The support system shall be capable of supporting the weight of a full drip pan plus an additional 300 lb. load.

7. See Section 15990 - HVAC Testing, Adjusting, and Balancing for drip pan testing procedures.

2.05 DUCT INSULATION

A. Products and Manufacturers:

1. Provide insulation as made by one of the following:

a. Armacell – AP/Armaflex FS

b. Aeroflex – Aerocel

c. or equal

B. Insulation

1. Type: Elastomeric Closed Cell Foam

2. FM Approved

3. Application

a. 1.5-inch thick where insulation is required. See Part 3 for required insulation installation locations.

4. Average thermal conductivity not to exceed 0.28 (Btu-in)/(hr-FT2-°F) at mean temperature of 75° F, temperature range -40° to 220° F; permeability not to exceed 0.20 by ASTM E96; water absorption 3 percent by ASTM D1056 and ozone resistant. The insulation shall have a flame spread rating of less than 25 and a smoke development of less than 50 per ASTM-E84.

5. Insulation shall be sealed vapor tight using an adhesive at all joints. The adhesive shall have a flame spread of less than 25 and a smoke development of less than 50 when tested per ASTM-E84.

C. Jacket

1. All insulation shall receive a 316 stainless steel jacket for stainless steel ductwork and aluminum for all other duct materials. The jacket shall be a minimum of 0.016 nominal thickness. Exposed insulation ends such as duct discharge points or overlapping insulation shall receive caps made of the same material as the jacketing.

2. Jacketing shall be secured with straps of the same material as the jacketing.

PART 3 -– EXECUTION

3.01 DELIVERY, STORAGE, AND HANDLING

A. Protect shop-fabricated and factory-fabricated ductwork, accessories and purchased products from damage during shipping, storage and handling.

B. Prevent end damage and prevent dirt and moisture from entering ducts and fittings. Where possible, store ductwork inside and protect from weather. If necessary to store outside, store above grade and enclose with waterproof wrapping.

3.02 INSTALLATION OF DUCTWORK

A. Examine areas and conditions under which ductwork is to be installed. Do not proceed with work until unsatisfactory conditions have been corrected in a manner acceptable to Installer.

B. Assemble and install ductwork in accordance with recognized industry practices, Manufacturer's installation instructions, and SMACNA standards to achieve the seal and leakage classes indicated in the Duct Construction Table at the end of this specification.

C. Install each run with minimum number of joints. Align ductwork accurately at connections, within 1/8" misalignment tolerance and with internal surfaces smooth.

D. Support ducts rigidly with suitable ties, braces, hangers and anchors of type which will hold ducts true-to-shape and to prevent buckling. Support vertical ducts at every floor.

E. Field Fabrication: Complete fabrication of work at project as necessary to match shop-fabricated work and accommodate installation requirements.

F. Locate ductwork runs, except as otherwise indicated, vertically and horizontally and avoid diagonal runs wherever possible. Locate runs as indicated by diagrams, details and

notations or, if not otherwise indicated, run ductwork in shortest route which does not obstruct useable space or block access for servicing building and its equipment.

G. Hold ducts close to walls, overhead construction, columns, and other structural and permanent enclosure elements of building. Limit clearance to 3" where furring is shown for enclosure or concealment of ducts, but allow for insulation thickness, if any. Where possible, locate insulated ductwork for 1" clearance outside of insulation. Wherever possible in finished and occupied spaces, conceal ductwork from view, by locating in mechanical shafts, hollow wall construction or above suspended ceilings.

H. Do not encase horizontal runs in solid partitions, except as specifically shown. Coordinate layout with suspended ceiling and lighting layouts and similar finished work.

I. Turning vanes shall be installed in all miter elbows to permit air to make the abrupt turns with a minimum of turbulence. The turning vanes shall be quiet and free from vibration when the system is in operation. Vanes shall be installed in all short radius elbows in accordance with SMACNA Duct Construction standards.

J. The dial regulators for manual volume dampers shall be marked so that the "open" and "shut" positions are clearly identified. The dial regulators on insulated ductwork shall be mounted on an elevated platform which will finish flush with the surface of the insulation. Manual volume dampers shall be located at accessible points and wherever possible some distance from a duct transition or fitting. Care shall be taken during installation to make certain that sheet metal fasteners do not protrude into the duct and interfere with damper operation. Volume dampers shall be provided in each branch duct take off and in both ducts downstream of each trunk duct split.

K. Duct access doors shall be provided before and after duct mounted coils, within working distance of, and on the fusible link side of all fire dampers, adjacent to volume dampers, on the linkage side of automatic dampers, duct mounted sensors, and at all other apparatus requiring service or inspection in the duct system. Access doors shall be a minimum of 15 x 18 inches; where the size of the duct will not accommodate this size the doors shall be made as large as practical. The doors shall be rigid and airtight, and provided with neoprene gaskets, hinges and sash locks. Whenever space requirements are such that a hinged access door is impractical, a screw fastened lift-out door shall be provided instead.

L. Test openings shall be installed in the ductwork at the points listed below. The openings shall be sealed by a screw cap and gasket and shall be installed so that the insulation is not disturbed when the cap is removed. The test openings shall be located as follows in all heating, ventilating, air conditioning, and dehumidification systems:

1. Upstream and downstream of each coil

2. In the outside air duct adjacent to the unit

3. In the return air duct adjacent to the unit

4. In the main supply duct on single zone units and in each zone supply duct on multizone units

5. Upstream and downstream of each filter bank

6. As indicated on the Contract Drawings

M. Air filter gauges for measuring the differential pressure through all filter banks shall be supplied and installed; one gauge shall be installed for each bank. The gauge shall be of the inclined tube differential type complete with 1" thick acrylic plastic body, mirror-polished scale, built-in level vial, over pressure safety traps, signal flags, 2 vent valves for zeroing gauge, 2 static pressure tips, two 5-foot lengths of 1/4" stainless steel tubing, 2 compression fittings, mounting hardware, a bottle of red gauge oil and instructions. The gauges shall have a range of 0-1.0-inch water column with minor divisions of .02-inch water column.

N. All air outlets shall be with rigid connection to the ductwork.

O. After the installation is completed, the Contractor shall seal all joints air tight. Sealants and tape shall have a flame spread not greater than 25 and a smoke developed rating of not over 50 per ASTM E-84.

3.03 INSULATION INSTALLATION

A. Insulation shall be installed on all outdoor ductwork carrying conditioned air, all ductwork carrying conditioned air through unconditioned spaces, and all ductwork carrying unconditioned air through conditioned spaces. Conditioned air is any air that has received any heating, cooling, or dehumidification from HVAC equipment. Conditioned spaces are any spaces that receive conditioned air. Return and exhaust ductwork serving a conditioned space is considered conditioned air.

B. Ductwork carrying cooled conditioned air passing through spaces that only receive heated conditioned air shall be insulated. Ductwork carrying cooled air for spaces that require year-round cooling such as electrical rooms, shall be insulated when passing through spaces that are provided heated conditioned air during the heating season.

C. Follow manufacturer’s installation instructions and recommended adhesives. The installation method shall provide a continuous vapor barrier.

D. The insulation vapor barrier shall be maintained through all supports, flanges, reinforcement, and penetrations. Where the duct weight would deform the insulation material at supports, the Contractor shall use fiberglass insulation blocks. The blocks shall be the same thickness as the insulation. The vapor barrier shall be maintained using a system approved by the insulation manufacturer for spanning the insulation block.

3.04 DAMPER AND LOUVER INSTALLATION

A. The Contractor shall install dampers and louvers per the manufacturer’s installation instructions.

B. The Contractor shall install all reinforcement required for multi-section dampers and louvers to all the assembly to withstand the rated velocity and pressure of the individual damper and louver sections.

3.05 EQUIPMENT CONNECTIONS

A. Connect metal ductwork to equipment as indicated, provide flexible connection for each ductwork connection to equipment mounted on vibration isolators, and/or equipment containing rotating machinery. Provide access doors as indicated in the Contract Drawings and Specifications.

3.06 ADJUSTING AND CLEANING

A. Clean ductwork internally, unit by unit as it is installed, of dust and debris. Clean external surfaces of foreign substances which might cause corrosive deterioration of metal or, where ductwork is to be painted, might interfere with painting or cause paint deterioration.

B. At ends of ducts which are not connected to equipment or air distribution devices at time of ductwork installation, provide temporary closure of polyethylene film or other covering which will prevent entrance of dust and debris until time connections are to be completed.

3.07 DUCT CLASSIFICATION

DUCT CONSTRUCTION SCHEDULE					
SERVICE	**PRESSURE CLASS**	**DUCT MATERIAL**	**SEAL CLASS**	**LEAKAGE CLASS**	**CONSTRUCTION STANDARDS**
All Ductwork	+/- 2 inwg.	300 Series Stainless Steel	A	12	SMACNA HVAC Duct Construction Standards

- END OF SECTION -

SECTION 15750

AIR CONDITIONING UNITS

PART 1 – GENERAL

1.01 SUMMARY

A. These specifications describe requirements for a precision environmental control system. The system shall be designed to maintain temperature and humidity conditions in the rooms containing electronic equipment. The manufacturer shall design and furnish all equipment to be fully compatible with heat dissipation requirements of the room and accessories. Refer to schedules for applicable equipment features.

B. The equipment shall include the following items plus whatever concrete housekeeping pads, anchor bolts, etc. that are required to mount the indoor and outdoor units and appurtenances, as required for a complete operational system and as shown on the Contract Drawings. Contractor shall provide all concrete pads shown on the HVAC drawings, unless provided as part of the General Contractors work on multiple prime contracts.

C. All necessary accessory equipment and appurtenances shall be provided for a complete and operating system whether or not specifically stated in the Specifications. This installation shall incorporate the highest standards for the type of service shown on the Drawings included field testing of the entire installation and instruction of the regular operating personnel in the care, operation, and maintenance of all equipment.

D. The equipment shall be furnished complete with all accessories, special tools, spare parts, extra set of filters, and other appurtenances as specified or as may be required for a satisfactory installation.

E. The entire packaged system of indoor unit and outdoor condensing unit shall be provided by one manufacturer with sole responsibility for the satisfactory manufacture, factory testing, installation supervision, and performance of the systems.

F. Work Included Under Other Sections:

1. 208V, 1-phase power wiring and conduit under Division 16, Electrical.

2. Motor starters under Division 16, Electrical, unless factory mounted and wired by equipment manufacturer

1.02 RELATED SPECIFICATIONS

A. Section 15553 - HVAC Copper and Brass Piping

B. Section 15990 – Testing, Adjustment and Balancing

1.03 DELIVERY, STORAGE AND HANDLING

A. Deliver, store, protect and handle products to the Project Site under the provisions of Division 1.

B. Accept products on site in factory-fabricated protective containers, with factory-installed shipping skids and lifting lugs. Inspect for damage.

C. Store in clean dry place and protect from weather and construction traffic. Handle carefully to avoid damage to components, enclosures and finish.

D. Protect openings in casing and seal them with plastic wrap to keep dirt and debris. Protect coils from entry of dirt and debris with pipe caps or plugs.

1.04 SCHEDULES ON DRAWINGS

A. In general, all capacities of equipment and motor and starter characteristics are shown in schedules on the Drawings. Reference shall be made to the schedules for such information. The capacities shown are minimum capacities. Variations in capacities of the scheduled equipment supplied under this Contract will be permitted only with the written direction of the Engineer.

1.05 MANUFACTURER'S INSTRUCTIONS

A. Installation of all equipment shall be in accordance with manufacturer's data.

B. All changes from the installation procedures in manufacturers' data shall be submitted for approval in accordance with the requirements for shop drawings.

C. Keep all manufacturers' data provided in a secure manner at the job site at all times. Catalog and index this data for convenient reference.

D. Manufacturers' data shall be available for the information of the Owner, Engineer, and the use of other trades.

E. Turn over all data to the Owner through the Owner's representative at completion of the Work and final testing.

F. Submit all instruction books and manuals in accordance with Division 1.

1.06 CODES, PERMITS AND STANDARDS

A. The contractor shall obtain and pay for all permits (unless specifically excluded under Division 1 requirements) and shall comply with all laws and codes that apply to the work

B. The Contractor shall be responsible for all added expenses due to his choice of equipment, materials or construction methods.

C. All work and materials shall be in full accordance with the latest State rules and regulations or publications including those of the State Fire Marchall, the State Mechanical and Energy

Codes, and all local codes. Nothing in the Plans and/or Specifications shall be construed to permit work not conforming to the above codes, rules and regulations.

D. All equipment, materials and installations shall conform to the requirements of the most recent edition with latest revisions, supplements and amendments of the following, as applicable:

1. American Society of Mechanical Engineers (ASME)
2. American Society of Heating, Refrigeration and Air Conditioning Engineers, Inc. (ASHRAE)
3. American National Standards Institute (ANSI)
4. American Society of Testing and Materials (ASTM)
5. Air Movement and Control Association (AMCA)
6. Air-conditioning, Heating and Refrigeration Institute (AHRI)
7. National Fire Protection Association (NFPA)
8. National Electrical Code (NEC)
9. International Mechanical Code
10. Underwriters Laboratories (UL)
11. Applicable Federal, State and local laws and/or ordinances

E. Where conflict arises between the local codes and the requirements of the National Electrical Code, The National Fire Code, NEMA, ASTM, etc., the more stringent requirements shall prevail.

1.07 SUBMITTALS

A. In accordance with the procedures and requirements set forth in the General Conditions and Division 1 the Contractor shall obtain from the equipment manufacturer and submit the following:

1. A list of all Contract deviations and non-applicable requirements. Those applicable Contract requirements that are not listed explicitly as deviations shall be deemed by the Contractor as being in total compliance with the Contract requirements. The Contractor is responsible for and will make any and all changes to installed equipment that does not comply with the Contract. Such changes shall be made at no additional cost.
2. Shop Drawings
3. Operation and Maintenance Manuals
4. Special Tools List

5. Reports of Certified Shop Tests

6. AMCA Approval of Fan Ratings

B. Each submittal shall be identified as specified in the General Conditions and Division

C. Shop Drawings:

1. Each submittal shall be complete in all aspects incorporating all information and data listed herein and all additional information required to evaluate the proposed piping material's compliance with the Contract Documents. Partial or incomplete submissions shall be returned to the Contractor disapproved without review.

2. Partial, incomplete or illegible submissions will be returned to the Contractor without review for resubmittal.

3. Shop drawings shall include but not be limited to:

a. Equipment specifications and data sheets identifying all materials used and methods of fabrication.

b. Complete assembly, layout, installation drawings with clearly marked dimensions.

c. Computer printout for coil selection.

d. Interconnecting wiring diagram.

e. Motor name plate data as specified in General Specification 15170, Low Voltage Electric Motors.

f. Example equipment nameplate data sheet.

D. Operations and Maintenance Manuals

1. The Contractor shall submit operation and maintenance manuals in accordance with the procedures and requirements set forth in the General Conditions and Division 1.

2. One electronic copy of a preliminary O&M manual shall be included in the shop drawing submittal.

1.08 QUALITY ASSURANCE AND QUALIFICATIONS

A. The equipment covered by these specifications is intended to be standard equipment of proven performance as manufactured by reputable concerns. In conformance with Article 5 of the General Conditions, equipment shall be designed, constructed and installed in accordance with the best practices of the trade, and as shown on the Contract Drawings.

B. The Manufacturer of the equipment shall provide documentation supporting compliance with ISO-9001:2008 (Model for Quality Assurance in Design/Development, Production, Installation and Servicing). Product literature provided by the manufacturer shall contain the ISO-9001:2008 Certification Mark from the applicable registrar.

C. All material and equipment shall be the latest design, new, not deteriorated, and the first quality standard product of manufacturers regularly engaged in the production of such material and equipment.

D. When two or more units of the same class of material or equipment are required, they shall be products of a single manufacturer.

E. All work shall be performed in a neat and workmanlike manner by workers skilled in their respective trades, and all materials and equipment shall be installed as recommended by the manufacturers and in accordance with specified codes and standards.

F. Touch up and/or repaint to match original factory finishes for all finished or painted equipment and materials which are scratched or marred during shipment or installation.

G. Factory Authorized Start-Up Services: The Contractor shall provide the services of a qualified manufacturer's technical representative who shall adequately supervise the installation and field testing of all equipment furnished under this Contract and instruct the Contractor's personnel and the Owner's operating personnel in its maintenance and operation as outlined in Division 1.

1.09 SPECIAL TOOLS

A. Furnish all special tools necessary to dissemble, service, repair and adjust the equipment.

PART 2 – PRODUCTS

2.01 SPLIT SYSTEM AIR CONDITIONING UNITS

A. General:

1. Split system, indoor, DX, fan coil AC unit, complete with DX coil, fan, fan motor, piping connectors, electrical controls, and hanging brackets.

2. Suitable for use with air conditioner or heat pump outdoor unit.

3. Indoor unit shall be of the same manufacturer as the associated outdoor unit.

B. Unit Cabinet:

1. Constructed of zinc-coated steel.

2. Fully insulated.

3. Discharge and inlet grilles, high-impact polystyrene.

4. Adjacent room cooling to be provided by a simple knockout in cabinet side panel.

C. Evaporator Fan:

1. Centrifugal, direct-drive blower type with air intake in center of unit and discharge on perimeter.

2. Motors:

    a. Totally enclosed and permanently lubricated with inherent protection.

    b. Three-speed.

D. DX Evaporator Coil:

1. Copper tube with aluminum fins and galvanized steel tube sheets.

2. Fins bonded to tubes by mechanical expansion.

3. Condensate Drip Pan: Locate under coil with drain connection for hose attachment to remove condensate.

E. Controls:

1. Refrigerant Metering:

    a. Factory installed refrigerant metering device.

    b. Heat Pump Applications: Reverse flow bypass refrigerant metering device with internal check valves.

2. 24volt wall-mounted seven day programmable thermostat with three fan speed selections and auto/manual switch.

3. Automatic restart after power failure at same operating conditions as at failure.

4. Float control in condensate sump to shut unit down in case of pump malfunction.

5. Evaporator coil freeze protection.

F. Air Filters: Filter tracks and cleanable filters, accessible from below with a 1/4-turn fastener.

G. Accessories: Provide as scheduled in Equipment Schedule and as follows.

1. Electronic Programmable Thermostat:

    a. Commercial grade, 7-day, 4-event scheduling.

    b. Integral subbase, three-speed fan control, heating/cooling switchover capability, air sweep auto changeover.

    c. Shall not require battery to retain memory.

H. Manufacturers and Products:

1. Trane/Mitsubishi

2. Mitsubishi Electric

3. Daikin.

4. Or Equal.

PART 3 – EXECUTION

3.01 INSTALLATION

A. Air conditioning unit shall be installed, connected and placed in satisfactory working order in accordance with the manufacturer's instructions and details, Section 01751 – Starting and Placing Equipment in Operation, and per the Contract Drawings. The Contractor shall furnish and install interconnecting wiring and conduits for any field mounted devices and the evaporator/condensing units and between the evaporator and condensing units. The number of control signals are per the manufacturer's requirements. The wiring and conduit shall be installed per the electrical requirements provided in Division 16.

3.02 IDENTIFICATION

A. Each unit of equipment shall be identified with the equipment item numbers given on the Contract Drawings. A corrosion resistant tag and nameplate, securely affixed in a conspicuous place on each unit shall give the equipment item number, manufacturer's name or trademark and such other information as the manufacturer may consider necessary, or as specified, to complete identification.

3.03 TESTING

A. All tests shall be performed in accordance with the requirements of the General Conditions.

B. Motor tests in accordance with General Specification 16481, Electric Motors.

C. Field tests shall be performed in accordance with General Specification 15990, Testing, Adjusting and Balancing.

3.04 MANUFACTURER'S SERVICES

A. The Contractor shall provide the services of a qualified manufacturer's technical representative who shall provide 8-hour minimum on-site supervision of the installation and testing of the equipment furnished under this specification and the associated appurtenances of the system.

B. The Contractor shall submit documentation from the manufacturer's representative that certifies and agrees the installation and operational testing of all units comply with the manufacturer's recommendations.

C. Any additional time, costs, or changes required to achieve manufacture approved successful installation and operation shall be at the expense of the Contractor.

D. Training:

1. The Contractor shall provide training for plant personnel by a certified manufacture representative. Training shall include written material and a minimum of an 8-hour

day at site to train the plant personnel as to the manufacturer required equipment operation and maintenance.

3.05 GUARANTEE

A. All components, parts, and assemblies shall be guaranteed against defects in materials and workmanship for a period of one (1) year. The period of such warranties shall start on the date the particular equipment is placed in use by the Owner with corresponding start-up certification provided by the manufacturer's technical representative as specified herein, provided that the equipment demonstrated satisfactory performance during the thirty day operational period after the equipment startup. If the equipment does not perform satisfactorily during the thirty-day operational period, the start of the warranty period will be delayed until the equipment demonstrates proper operation. The Equipment Supplier shall repair or replace without charge to the Owner any part of equipment which is defective or showing undue wear within the guarantee period, or replace the equipment with new equipment if the mechanical performance is unsatisfactory; furnishing all parts, materials, labor, etc., necessary to return the equipment to its specified performance level.

- END OF SECTION -

SECTION 15990

HVAC TESTING, ADJUSTING, AND BALANCING

PART 1 - GENERAL

1.01 THE REQUIREMENT

A. This Section specifies the requirements and procedures for testing, adjusting, and balancing the HVAC systems. Requirements include measurement and establishment of the fluid quantities of the HVAC systems as required to meet design specifications, and recording and reporting the results.

B. The following HVAC systems shall be tested, adjusted and balanced:

1. Supply air systems, all pressure ranges, including new and existing systems

2. Exhaust air systems

3. Outside air systems, including new and existing systems

4. Air Cooling systems

5. Verify HVAC Master Control Station (HMCS) operation

C. This Section does not include specifications for materials for patching HVAC systems, or specifications for materials and installation of adjusting and balancing devices. If devices must be added to achieve proper adjusting and balancing, refer to the respective system sections for materials and installation requirements.

1.02 DEFINITIONS

A. Systems testing, adjusting, and balancing is the process of checking and adjusting all the building environmental systems to produce the design objectives. It includes the balance of air distribution, water distribution, the adjustment of total system to provide design quantities, the electrical measurement, and the verification of performance of all equipment and automatic controls.

1. Test: To determine quantitative performance of equipment.

2. Adjust: To regulate the specified fluid flow rate and air patterns at the terminal equipment (e.g., reduce fan speed, throttling).

3. Balance: To proportion flows within the distribution system (submains, branches, and terminals) according to specified design quantities.

4. Procedure: Standardized approach and execution of sequence of work operations to yield reproducible results.

5. Report Forms: Test data sheets arranged for collecting test data in logical order for submission and review. These data should also form the permanent record to be used as the basis for required future testing, adjusting, and balancing.

6. Terminal: The point where the controlled fluid enters or leaves the distribution system. These are supply inlets or supply outlets on air terminals and exhaust or return inlets on air terminals such as registers, grilles, diffusers, louvers, and hoods.

7. Main: Duct containing the system's major or entire fluid flow.

8. Submain: Duct containing part of the systems' capacity and serving two or more branch mains.

9. Branch Main: Duct serving two or more terminals.

10. Branch: Duct serving a single terminal.

1.03 SUBMITTALS

A. Prior to balancing, the Contractor shall perform Equipment Testing as indicated in section 3.1. Prior to performing System Testing, the Contractor shall have the system balanced as indicated in section 3.1.

B. Submit proof that the Test and Balance Engineer assigned to supervise the procedures, and the technicians proposed to perform the procedures meet the qualifications specified below.

C. The Contractor shall submit a detailed testing procedure which shall include:

1. Step by step instructions as to how the tests will be performed including but not limited to temporary layout modifications, procedures for testing instrument functionality, steps required to prove that the Control Strategy has been properly implemented, and steps required to compensate for ambient air temperature versus normal operating temperature such as thermostat setpoint adjustment. The steps shall indicate all actions to be taken, the expected result of the actions, and what the expected result verifies in regards to proving that the unit operates as designed.

2. A list of any additional or temporary equipment necessary to perform the tests.

3. Provide a checklist of items that will checked during the test as listed in Section 3.1. Each item shall be initialed by the Contractor’s Testing and Balancing Technician conducting the test. The Contractor’s Testing and Balancing Engineer shall sign and date the bottom of the test sheet verifying all results.

D. The Contractor shall submit the signed results of the equipment testing to the Engineer for approval. The equipment manufacturer’s representative shall be present for all testing.

The results shall include a letter from the manufacturer's representative stating that the equipment has been installed per the manufacturer's installation requirements and is in satisfactory working order.

E. The Contractor shall submit an adjusting and balancing procedure which shall include:

1. Standard procedure the Contractor will use for balancing the systems.

2. Tables specific to the equipment for this project for recording the required information from Part 3 – Execution.

3. Flow diagrams specific to the systems present on this project. The flow diagrams shall contain at a minimum:

a. A diagrammatic representation of the system

b. All duct or pipe sizes

c. All inline equipment such as fans and filters

d. All air inlet and outlet grilles and registers

e. All dampers, valves, or flow control equipment

4. A list of the equipment the balancing technician will use to balance the system

F. Submit completed adjusting and balancing reports bearing the seal and signature of the Test and Balance Engineer. The reports shall be certified proof that the systems have been adjusted and balanced in accordance with the referenced standards; are an accurate representation of how the systems have been installed; are a true representation of how the systems are operating at the completion of the testing, adjusting, and balancing procedures; and are an accurate record of all final quantities measured, to establish normal operating values of the systems. The adjusting and balancing reports shall contain at a minimum

1. Report Format: Report forms shall be those standard forms prepared by the referenced standard for each respective item and system to be tested, adjusted, and balanced. Bind report forms complete with schematic systems diagrams and other data in reinforced, vinyl, three-ring binders. Provide binding edge labels with the project identification and a title descriptive of the contents. Divide the contents of the binder into the below listed divisions, separated by divider tabs:

a. General Information and Summary

b. Technician Qualifications and Certificates

c. Completed Adjusting and Balancing Report including procedure

d. Temperature Control System Settings

e. Calibration Certificates of all Instruments Used

2. Report Contents: Provide the following minimum information, forms and data:

a. General Information and Summary: Inside cover sheet to identify testing, adjusting, and balancing agency, Contractor, Owner, Architect, Engineer, and Project. Include addresses, and contact names and telephone numbers. Also include a certification sheet containing the seal and name, address, telephone number, and signature of the Certified Test and Balance Engineer.

b. Calibration Certificates: Submit proof that all required instrumentation has been calibrated to tolerances specified in the referenced standards, within a period of six months prior to the date of the start of balancing.

c. Flow Diagrams

d. Balancing Datasheets

e. Balancer Comments: The Balancer shall provide comments, suggestions, and corrective actions to any issues that occur during balancing including excessive noise, excessive vibration, or an inability to meet design conditions.

1.04 QUALITY ASSURANCE

A. Test and Balance Personnel Qualifications: The personnel responsible for testing, adjusting, and balancing the specified systems shall have at least three years' experience in testing and balancing systems similar to this project and shall be an employee of the installer or an independent testing and balancing agency.

B. Codes and Standards:

1. NEBB, "Procedural Standards for Testing, Adjusting, and Balancing of Environmental Systems."

2. ASHRAE Handbook, 1984 Systems Volume, Chapter 37, Testing, Adjusting, and Balancing.

C. Contractor shall provide all necessary instrumentation, tools, ladders, and labor etc. to complete all air balancing, tests and adjustments.

D. Instrumentation shall be in accordance with NEBB, AABC, or SMACNA requirements and shall be calibrated to the accuracy standards demanded by these organizations.

E. All testing, adjusting, and balancing of air systems shall be performed in compliance with the standard procedure manual published by the testing, adjusting, and balancing organization affiliated with NEBB, AABC, or SMACNA Organization. Testing, adjusting,

and balancing technician shall hold current certification by one of these organizations. Submit certification to Engineer for approval.

F. Contractor shall be solely responsible for the protection and safeguarding of his work and shall provide every protection against accidents, injury, and damage to persons and property.

G. Contractor shall keep dust, dirt, and debris to an absolute minimum and reinstall all removed ceiling components to their original positions at the end of each day.

H. Contractor shall be fully responsible for removal and reinstallation of ceiling system and replacement of any component damaged.

1.05 SEQUENCING AND SCHEDULING

A. Systems shall be fully operational prior to beginning procedures.

1.06 RELATED SECTIONS

A. Section 15500 - Basic HVAC Requirements

B. Section 15553 – HVAC Copper and Brass Piping

C. Section 15598 – Metallic Ductwork and Duct Accessories

D. Section 15750 – Air Conditioning Units

PART 2 - MATERIALS

(NOT USED)

PART 3 - EXECUTION

3.01 HVAC TESTING

A. Equipment to be tested shall include at a minimum all fans, duct heaters, unit heaters, air conditioning units, H&V units, dehumidifiers, and electric control systems. The specific requirements for equipment indicated below shall be performed in addition to any requirements of the Manufacturer for startup and initial operation.

B. The equipment manufacturer's representative shall be present for all testing.

C. Fans:

1. Pre Startup Inspection:

a. Verify proper equipment mounting and setting

b. Verify that control, interlock and power wiring is complete

c. Verify alignment of motors and drives

d. Verify proper belt tension

e. Verify proper duct connections and accessories

f. Verify that lubrication is completed

g. Verify that equipment is in good condition and free from damage

h. Verify that all packing materials, temporary stops, and temporary supports used during shipping have been removed

i. Verify that equipment and associated ducts are free from debris

j. Verify that equipment is installed per the Manufacturer's requirements

2. Equipment Test:

a. Prior to energizing motor, verify and record voltage of power supply

b. Bump motor to verify direction of rotation

c. Run the fan for 1 hour of continuous trouble free operation. Any issues or stops required for tuning or repairs shall cause the test to be restarted from the beginning of this procedure.

d. Monitor heat build-up in bearings

e. Monitor for any abnormal noises or vibration

f. Check motor loads against nameplate data

g. Record fan sound levels ten (10) feet from the surface of the fan in five (5) minute intervals during 1 hour run period. The sound levels shall not be used for any sound rating verification. The sound levels shall be used for information by the owner to identify areas that will require hearing protection.

3. System Test:

a. Verify the system operates per the respective equipment specification, including all modes of operation, interlocks, alarms, and safeties.

D. Air Handling Units, Packaged DX Units, Split Systems, and Fan Coil Units

1. Pre Startup Inspection:

    a. Verify proper equipment mounting and setting

    b. Verify that control, interlock and power wiring is complete

    c. Verify proper duct connections and accessories

    d. Verify that lubrication is completed

    e. Verify that equipment is in good condition and free from damage

    f. Verify that all packing materials, temporary stops, and temporary supports used during shipping have been removed

    g. Verify that equipment and associated ducts are free from debris

    h. Verify that the refrigeration system has been evacuated and charged per the Manufacturer's requirements

    i. Verify that equipment is installed per the Manufacturer's requirements

2. Equipment Test:

    a. Prior to energizing unit, verify and record voltage of power supply

    b. Run the unit for 1 hour of continuous trouble free operation. Any issues or stops required for tuning or repairs shall cause the test to be restarted from the beginning of this procedure. If the ambient air temperature is too low to have the refrigeration system running constantly for 1 hour, the Contractor shall take into account any additional measures required to accomplish the testing based on the ambient air temperature. The Contractor shall provide any temporary heating equipment required to run this test including but not limited to temporary fans, ductwork, heaters, generators, heat exchangers, combustion equipment, and fuel storage and pumping at no cost to the project. Use of any heating equipment that was installed as part of this work shall not be permitted to be used as a heat source.

    c. Monitor discharge and return air temperatures

    d. Monitor for any abnormal noises or vibration

    e. Record fan sound levels ten (10) feet from the surface of the equipment in five (5) minute intervals during 1 hour run period. The sound levels shall not be used for any sound rating verification. The sound levels shall be used for information by the owner to identify areas that will require hearing protection.

3. System Test:

   a. Verify the system operates per Section 15750-Control Room Air Conditioning Units, including all modes of operation, interlocks, alarms, and safeties.

E. Drip Pans

1. Drip pans and drains shall be hydrostatically tested under gravity of a filled drip pan and drain line for a minimum of 30 minutes. Any leaks shall be corrected and the drip pan/drains retested until a watertight drip pan drainage system is confirmed.

F. Ductwork

1. All openings in the ductwork shall be temporarily sealed and the ductwork shall be pressurized and leak tested to demonstrate that the installation meets the specified SMACNA leakage class requirements. The Contractor shall follow SMACNA procedures for testing as outlined in SMACNA's HVAC Air Duct Leakage Test Manual.

G. Piping

1. Piping shall be tested as indicated in specification 15553 – HVAC Copper and Brass Piping.

H. At the completion of all of the individual equipment testing, the Contractor perform a HVAC System Run Test. The Run Test shall consist of operating the entire HVAC system as a whole using automatic controls for a period of not less than 15 consecutive days with no significant disruptions, repairs, reprogramming, or outages. Any issues during this period shall reset the testing period until it passes.

3.02 ADJUSTMENT AND BALANCING REQUIREMENTS

A. Identify and list size, type, and manufacturer of all equipment to be balanced, including air terminals and all end user equipment.

B. Test and record motor voltages, running amperes, shaft rpm and power factor including motor nameplate data, and starter heater ratings for each unit listed above.

C. Air Equipment Balancing

1. The Contractor shall start the fan and verify that the fan amperage and speed are within the design requirements. The Contractor shall then proportionally balance the air distribution system using the dampers at the air terminals. When the system is proportionally balanced, the Contractor shall adjust the fan speed to achieve the total design flowrate of the system. Fan speed adjustment shall be accomplished by adjusting variable pitch drives or by replacing the fan sheaves. The Contractor shall then take final readings for the total system flow as well as readings for each air

terminal.

2. For all ducted air systems, the Contractor shall measure the flow rate in cfm at each air inlet, at the fan, and at each outlet for each system. The Contractor shall provide this information in the report to demonstrate that the system as installed meets the seal class rating as indicated in section 15598 - Metallic Ductwork and Duct Accessories.

3. Test and record the following:

   a. Fan system static pressure.

   b. All fan speeds.

   c. Air quantity delivered by each grille and register.

   d. Pressure drop across each piece of inline equipment such as a duct heater or filter bank. Filters shall be new and clean at time of testing and balancing.

   e. Final damper and air extractor positions for all dampers and extractors

4. Distribution:

   a. Adjust volume dampers, control dampers, etc., to provide the proper design CFM in ducts.

5. Air Terminals:

   a. Identify each air terminal as to location and determine required flow reading.

   b. Test and adjust each air terminal to within flow rate tolerance of design requirements as listed below. Under no circumstances shall the balancing impact the pressurization of spaces that are required to have a specific pressurization:

      i. Diffusers and Supply Registers: 0% to +10%

      ii. Return Registers: 0% to -10%

6. Verification:

   a. At the completion of the balancing work, the Contractor shall check and record the flow rate and static pressure at all supply, return, and exhaust air points to show final balanced conditions. The Contractor shall provide in the report a table with a summation of readings comparing the required cfm, final cfm, and final static pressure for each supply, return, and exhaust terminal and all final damper positions.

   b. Verify design cfm at fans as described above.

c. If the air systems are not properly balanced, the Contractor shall re-balance and recheck all data.

D. The testing and balancing activities described in this Section shall culminate in a report to be provided in quadruplicate (4), individually bound and also provided electronically to the Engineer for approval. Neatly type and arrange data. Include with the data, the dates tested, personnel present, weather conditions, nameplate record of test instrument and list all measurements taken after all corrections are made to the system. Record all failures and corrective action taken to remedy incorrect situation. The intent of the report is to provide a reference of actual operating conditions for the Owner's operations personnel.

E. All measurements and recorded readings (of air, water, electricity, etc.) that appear in the report must have been made at the Project Site by the permanently employed technicians or engineers of the TAB Firm.

3.03 PERFORMING TESTING, ADJUSTING, AND BALANCING

A. Perform testing and balancing procedures on each system identified in accordance with the detailed procedures outlined in the referenced standards.

B. Cut insulation and ductwork for installation of test probes to the minimum extent necessary to allow adequate performance of procedures.

C. Patch insulation, ductwork, and housings using materials identical to those removed.

D. Seal ducts, test, and repair leaks created during the testing and balancing procedures on the hydronic and air systems.

E. Seal insulation to re-establish integrity of the vapor barrier at all locations where the vapor barrier was disturbed during the testing and balancing procedures.

F. Mark equipment settings, including damper control positions, valve indicators, fan speed control levers, and similar controls and devices, to show final settings. Mark with paint or other suitable, permanent identification materials.

G. Retest, adjust, and balance systems subsequent to significant system modifications, and resubmit test results.

3.04 RECORD AND REPORT DATA

A. Record all data obtained during testing, adjusting, and balancing in accordance with standard practices and the specific requirements identified in this section.

B. Prepare report of recommendations for correcting unsatisfactory mechanical performances when system cannot be successfully balanced.

- END OF SECTION -

SECTION 15995

PIPELINE TESTING AND DISINFECTION

PART 1 – GENERAL

1.01 THE REQUIREMENT

A. The Contractor shall perform flushing, disinfection and testing of all pipelines and appurtenant piping, complete, including conveyance of test water from City-designated source to point of use and all disposal thereof, all in accordance with the requirements of the Contract Documents.

1.02 REFERENCE SPECIFICATIONS, CODES, AND STANDARDS

A. Commercial Standards

1. ANSI / AWWA B300 Hypochlorites
2. ANSI / AWWA B301 Liquid Chlorine
3. ANSI / AWWA C651 Disinfecting Water Mains

1.03 SUBMITTALS

A. A testing schedule, including proposed plans for water conveyance, control, and disposal shall be submitted in writing for approval a minimum of seven (7) days before testing is to start.

B. The Contractor shall submit hydrostatic test reports in accordance with the Sections entitled “Submittals” and “Project Closeout.”

PART 2 – PRODUCTS

2.01 MATERIALS REQUIREMENTS

A. All test equipment, temporary valves or bulkheads, temporary vents or drains, or other water control equipment and materials shall be determined and furnished by the Contractor subject to the City review.

B. No materials shall be used which would be injurious to the construction or its future function.

PART 3 – EXECUTION

3.01 GENERAL

A. Notify the Engineer and City 48 hours in advance to obtain City approval to commence testing and/or disinfection of any particular structure and/or pipeline.

B. Unless otherwise provided herein, water for flushing and testing pipelines will be furnished

by the City; however, the Contractor shall make all necessary provisions for conveying the water from the City-designated source to the points of use.

C. All pressure and gravity pipelines shall be tested. All testing operations shall be performed in the presence of the City.

3.02 FLUSHING

A. At the conclusion of the installation work, the Contractor shall thoroughly clean all new liquid conveying pipe by flushing with water or other means to remove all dirt, stones, pieces of wood, etc., which may have entered the pipe during the construction period.

B. If after this cleaning any obstructions remain, they shall be corrected by the Contractor, at the Contractor's expense, to the satisfaction of the City. Liquid conveying pipelines shall be flushed at the rate of at least 2.5 feet per second for a duration suitable to the City or shall be flushed by other methods approved by the City.

3.03 HYDROSTATIC TESTING OF PIPING

A. Following pipeline flushing, the Contractor shall hydrostatically test all pipelines either in sections or as a unit. No section of the pipeline shall be tested until all field-placed concrete or mortar have attained an age of 14 days. The test shall be made by closing valves when available, or by placing temporary bulkheads in the pipe and filling the line slowly with water. The Contractor shall be responsible for ascertaining that all test bulkheads are suitably restrained to resist the thrust of the test pressure without damage to, or movement of, the adjacent pipe. Care shall be taken to see that all air vents are open during filling.

B. The pipeline shall be filled at a rate which will not cause any surges or exceed the rate at which the air can be released through the air valves at a reasonable velocity and all the air within the pipeline shall be properly purged. After the pipeline or section thereof has been filled, it shall be allowed to stand under a slight pressure for at least 24 hours to allow the concrete or mortar lining, as applicable, to absorb what water it will and to allow the escape of air from any air pockets. During this period, bulkheads, valves, and connections shall be examined for leaks. If leaks are found, corrective measures satisfactory to the City shall be taken.

C. The test pressure for the hydrostatic test shall be as specified in the Section entitled "Schedules."

D. The hydrostatic test shall consist of holding the test pressure on the pipeline for a period of 4 hours. All visible leaks shall be repaired in a manner acceptable to the City.

E. The maximum allowable leakage shall be determined by the following formula:

$$L = \frac{SD\sqrt{P}}{148{,}000}$$

Where: D = Pipe diameter in inches

S = Length of lines in linear feet

P = Average test pressure in psig

L = Allowable leakage for system in gallons per hour

F. In the case of pipelines that fail to pass the prescribed leakage test, the Contractor shall determine the cause of the leakage, shall take corrective measures necessary to repair the leaks, and shall again test the pipelines. The Contractor shall provide all reaction blocking and necessary plugs and caps required to test all piping installed as part of this Contract.

G. The Contractor shall submit to the City a detailed description of the testing procedures to be utilized.

3.04 FLUSHING

A. All piping shall be flushed clean of all dirt and foreign material following completion of the hydrostatic and leakage test. Air and gas piping shall be purged with air or nitrogen gas as directed by the Engineer.

B. Equipment and Supplies. The Contractor shall provide all equipment, and supplies for performing the work, and shall waste the water at locations or by procedures approved by the Engineer.

3.05 DISINFECTION

A. Disinfection of potable water lines shall be performed in accordance with AWWA Standard C-651, State of Florida and local applicable regulations. The Contractor shall provide a Disinfection Plan to the Engineer for approval. The Contractor shall be responsible for furnishing fittings and all special pipe taps required by the pipe disinfection work.

B. Provide list of equipment required and a disinfection plan to execute the Work of this Section.

C. Inject the required amount of disinfectant to yield a minimum chlorine content of 50 ppm into piping system.

D. Allow solution to remain in the pipes for twenty-four hours or longer, if required, to destroy all harmful bacteria.

E. Operate all valves and other appurtenances during disinfection to assure the sterilizing mixture is dispersed into all parts of the system.

F. After the solution has been retained for the required time, pipes shall be flushed and filled with municipal domestic water. Sterilizing water shall be disposed of in an approved manner. Sterilizing water shall not be allowed to flow into a waterway without reducing chlorine concentrations to a safe level. The Contractor shall be responsible for meeting all applicable requirements and acquiring all necessary permits for this work.

G. Take one bacteriological sample and test from every segment of pipeline tested. Samples shall be taken and tested on each of two successive days. Contractor shall submit sample to a laboratory, approved by Engineer, for testing. The disinfection process shall be repeated if laboratory test results reflects presence of harmful bacteria in the water.

3.06 TESTS

A. Provide analysis of treated water to meet standards and received acceptance from the Health Department.

B. Test samples in accordance with AWWA C651.

C. Quality Assurance: Testing Laboratory: Certified for examination of drinking water in compliance with applicable legislation of the State of Florida.

D. Regulatory Requirements: Conform to Chapter 62-555 of the Florida Administrative Code.

E. Submittals

1. Submit name of testing laboratory and evidence of qualification.

2. Submit three copies of reports.

F. Project Record Documents

1. Submit reports under provisions of the Sections entitled “Submittals” and “Project Closeout.”

2. Bacteriological report; accurately record:

a. Date issued, project name, and testing laboratory name, address, and telephone number.

b. Time and date of water sample collection.

c. Name of person collection sample.

d. Test locations.

e. Initial and twenty-four- hour disinfectant residuals in ppm for each outlet tested.

f. Coliform bacteria test results for each outlet tested.

g. Certification that water conforms or fails to conform to bacterial standards of State of Florida.

h. Bacteriologist's signature.

3.07 CONNECTIONS TO EXISTING SYSTEM

A. Where connections are to be made to an existing potable water system, the interior surfaces of all pipe and fittings used in making the connections shall be swabbed or sprayed with a one percent hypochlorite solution before they are installed. Thorough flushing shall be started as soon as the connection is completed and shall be continued until discolored water is eliminated.

B. Prior to actual connections to the existing potable water system, record drawings, hydrostatic pressure test results, and bacterial test results shall be submitted to the Engineer. Upon approval from the Public Health Department, the connection can be constructed.

-END OF SECTION-

DIVISION 16 – ELECTRICAL

PROJECT NO. 12745

SECTION 16000

BASIC ELECTRICAL REQUIREMENTS

PART 1 – GENERAL

1.01 THE REQUIREMENT

A. The Contractor shall furnish all labor, materials, tools, and equipment, and perform all work and services necessary for, or incidental, to the furnishing and installation of all electrical work as shown on the Drawings, and as specified in accordance with the provisions of the Contract Documents and completely coordinate with the work of other trades involved in the general construction. Although such work is not specifically shown or specified, all supplementary or miscellaneous items, appurtenances, and devices incidental to or necessary for a sound, secure, and complete installation shall be furnished and installed as part of this work. The Contractor shall obtain approved Shop Drawings showing wiring diagrams, connection diagrams, roughing-in and hook up details for all equipment and comply therewith. All electrical work shall be complete and left in operating condition in accordance with the intent of the Drawings and the Specifications for the electrical work.

B. Reference Section 17000, Control and Information System Scope and General Requirements for scope of work details as they relate to the Division 17 Subcontractor.

C. The electrical scope of work for this project primarily includes, but is not limited to, the following:

1. Furnish and installation new automatic transfer switches.

2. Furnish and install new diesel engine Standby generator.

3. Provide new 480/277V utility services.

4. Furnish and install low voltage motor control equipment including reduced voltage motor starters.

5. Furnish and install power panelboards, lighting panelboards, dry-type transformers, and other low voltage electrical power distribution equipment.

6. Furnish and install all aboveground raceway systems including conduit, fittings, boxes, supports, and other pertinent components.

7. Furnish and install all underground raceway systems including conduit, fittings, manholes, handholes and other pertinent components.

8. Furnish and install all low voltage wire and cable resulting in a complete and operable electrical system.

9. Furnish and install new lighting systems and wiring devices.

10. Furnish and install lightning protection systems as indicated on the Drawings.

11. Other electrical work as specified herein and indicated on the Drawings.

D. All material and equipment must be the product of an established, reputable, and approved manufacturer; must be new and of first class construction; must be designed and guaranteed to perform the service required; and must bear the label of approval of the Underwriters Laboratories, Inc., where such approval is available for the product of the listed manufacturer as approved by the Engineer.

E. When a specified or indicated item has been superseded or is no longer available, the manufacturer's latest equivalent type or model of material or equipment as approved by the Engineer shall be furnished and installed at no additional cost to the City.

F. Where the Contractor's selection of equipment of specified manufacturers or additionally approved manufacturers requires changes or additions to the system design, the Contractor shall be responsible in all respects for the modifications to all system designs, subject to approval of the Engineer. The Contractor's bid shall include all costs for all work of the Contract for all trades made necessary by such changes, additions or modifications or resulting from any approved substitution.

G. Furnish and install all stands, racks, brackets, supports, and similar equipment required to properly serve the equipment which is furnished under this Contract, or equipment otherwise specified or indicated on the Drawings.

1.02 EQUIPMENT LOCATION

A. The Drawings show the general location of feeders, transformers, outlets, conduits, and circuit arrangements. Because of the small scale of the Drawings, it is not possible to indicate all of the details involved. The Contractor shall carefully investigate the structural and finish conditions affecting all of his work and shall arrange such work accordingly; furnishing such fittings, junction boxes, and accessories as may be required to meet such conditions. The Contractor shall refer to the entire Drawing set to verify openings, special surfaces, and location of other equipment, or other special equipment prior to roughing-in for panels, switches, and other outlets. The Contractor shall verify all equipment dimensions to ensure that proposed equipment will fit properly in spaces indicated.

B. Where outlets are shown near identified equipment furnished by this or other Contractors, it is the intent of the Specifications and Drawings that the outlet be located at the equipment to be served. The Contractor shall coordinate the location of these outlets to be near the final location of the equipment served whether placed correctly or incorrectly on the Drawings.

1.03 LOCAL CONDITIONS

A. The Contractor shall examine the site and become familiar with conditions affecting the work. The Contractor shall investigate, determine, and verify locations of any overhead or buried utilities on or near the site, and shall determine such locations in conjunction with all public and/or private utility companies and with all authorities having jurisdiction. All costs, both temporary and permanent to connect all utilities, shall be included in the Bid.

The Contractor shall be responsible for scheduling and coordinating with the local utility for temporary and permanent services.

B. The Contractor is responsible for coordinating all electric utility equipment installations with the serving electric utility. The Contractor shall furnish and install all electric utility equipment required by the electric utility to be installed by the Contractor whether specifically shown on the Drawings or not. The Contractor shall furnish and install the following electrical utility equipment as a minimum:

1. Service conductor ductbank

2. Metering cabinets and/or bases

3. Service conductors

4. Service conductor terminations at service entrance equipment

5. Primary conductor conduit (install only)

C. The electric utility will furnish and install the following equipment:

1. Primary conductors and terminations

2. Service conductor terminations at utility power pole

The Contractor is responsible for ensuring that all electric utility equipment installed by, and construction work performed by the Contractor is completed in accordance with the electric utility's design specifications and requirements. The Contractor is fully responsible for coordinating his scope of work with the electric utility. Any additional required electric utility construction or equipment not specified herein or shown on the Drawings shall be supplied by the Contractor at no additional cost to the City.

The contact person at the serving electrical utility is:

Daniel Torres
Florida Power & Light (FPL)
Wingate Service Center
3020 NW 19th Street,
Ft. Lauderdale, FL 33311
954-717-2063
Daniel.Torres2@fpl.com

1.04 SUBMITTALS

A. In accordance with the procedures and requirements set forth in the General Conditions, Section 01300 – Submittals, and the requirements of the individual specification sections, the Contractor shall obtain from the equipment manufacturer and submit the following:

1. Shop Drawings

2. Operation and Maintenance Manuals

3. Spare Parts List

4. Proposed Testing Methods and Reports of Certified Shop Tests.

5. Reports of Certified Field Tests.

6. Manufacturer's Representative's Certification.

B. Submittals shall be sufficiently complete in detail to enable the Engineer to determine compliance with Contract requirements.

C. Submittals will be approved only to the extent of the information shown. Approval of an item of equipment shall not be construed to mean approval for components of that item for which the Contractor has provided no information.

D. Some individual Division 16 specification sections may require a Compliance, Deviations, and Exceptions (CD&E) letter to be submitted. If the CD&E letter is required and shop drawings are submitted without the letter, the submittal will be rejected. The letter shall include all comments, deviations and exceptions taken to the Drawings and Specifications by the Contractor AND Equipment Manufacturer/Supplier. This letter shall include a copy of this specification section. In the left margin beside each and every paragraph/item, a letter "C", "D", or "E" shall be typed or written in. The letter "C" shall be for full compliance with the requirement. The letter "D" shall be for a deviation from the requirement. The letter "E" shall be for taking exception to a requirement. Any requirements with the letter "D" or "E" beside them shall be provided with a full typewritten explanation of the deviation/exception. Handwritten explanation of the deviations/exceptions is not acceptable. The CD&E letter shall also address deviations, and exceptions taken to each Drawing related to this Specification Section.

1.05 APPLICABLE CODES AND REQUIREMENTS

A. Conformance

1. All work, equipment and materials furnished shall conform with the existing rules, requirements and specifications of the following:

a. Insurance Rating Organization having jurisdiction

b. The serving electrical utility company

c. The currently adopted edition of the National Electrical Code (NEC)

d. The National Electric Manufacturers Association (NEMA)

e. The Institute of Electrical and Electronic Engineers (IEEE)

f. The Insulated Cable Engineers Association (ICEA)

g. The American Society of Testing Materials (ASTM)

h. The American National Standards Institute (ANSI)

i. The requirements of the Occupational Safety Hazards Act (OSHA)

j. The National Electrical Contractors Association (NECA) Standard of Installation

k. National Fire Protection Association (NFPA)

l. International Electrical Testing Association (NETA)

m. All other applicable Federal, State and local laws and/or ordinances.

2. All material and equipment shall bear the inspection labels of Underwriters Laboratories, Inc., if the material and equipment is of the class inspected by said laboratories.

B. Nonconformance

1

1. Any paragraph of requirements in these Specifications, or Drawings, deviating from the rules, requirements and Specifications of the above organizations shall be invalid and their (the above organizations) requirements shall hold precedent thereto. The Contractor shall be held responsible for adherence to all rules, requirements and specifications as set forth above. Any additional work or material necessary for adherence will not be allowed as an extra, but shall be included in the Bid. Ignorance of any rule, requirement, or Specification shall not be allowed as an excuse for nonconformity. Acceptance by the Engineer does not relieve the Contractor from the expense involved for the correction of any errors which may exist in the drawings submitted or in the satisfactory operation of any equipment.

C. Certification

1. Upon completion of the work, the Contractor shall obtain certificate(s) of inspection and approval from the National Board of Fire Underwriters or similar inspection organization having jurisdiction and shall deliver same to the Engineer and the City.

1.06 PERMITS AND INSPECTIONS

A. The Contractor shall reference the General Conditions and Section 01010, Summary of Work.

1.07 TEMPORARY LIGHTING AND POWER

A. The Contractor shall reference the General Conditions and Section 01500, Construction Facilities and Temporary Controls.

1.08 TESTS

A. Upon completion of the installation, the Contractor shall perform tests for operation, load (Phase) balance, overloads, and short circuits. Tests shall be made with and to the satisfaction of the City and Engineer.

B. The Contractor shall perform all field tests and shall provide all labor, equipment, and incidentals required for testing and shall pay for electric power required for the tests. All defective material and workmanship disclosed shall be corrected by the Contractor at no cost to the City. The Contractor shall show by demonstration in service that all circuits and devices are in good operating condition. Test shall be such that each item of control equipment will function not less than five (5) times.

C. Refer to each individual specification section for detailed test requirements.

D. The Contractor shall complete the installation and field testing of the electrical installation at least two (2) weeks prior to the start-up and testing of all other equipment. During the period between the completion of electrical installation and the start-up and testing of all other equipment, the Contractor shall make all components of the Work available as it is completed for their use in performing Preliminary and Final Field Tests.

E. Before each test commences, the Contractor shall submit a detailed test procedure, and also provide test engineer resume, manpower and scheduling information for the approval by the Engineer. In addition, the Contractor shall furnish detailed test procedures for any of his equipment required as part of the field tests of other systems.

1.09 INFRARED INSPECTION

A. Just prior to the final acceptance of a piece of equipment, the Contractor shall perform an infrared inspection to locate and correct all heating problems associated with electrical equipment terminations. The infrared inspection shall be performed by a third party, independent testing agency, not the Electrical Contractor.

B. The infrared inspection shall apply to all new equipment and existing equipment that is in any way modified under this Contract. All heating problems detected with new equipment furnished and installed under the Scope of this Contract shall be corrected by the Contractor. All problems detected with portions of existing equipment modified under this Contract shall also be corrected by the Contractor.

C. Any issues detected with portions of existing equipment that were not modified under this Contract are not the responsibility of the Contractor. Despite the Contractor not being held responsible for these problems, the Contractor shall report them to the City and Engineer immediately for resolution.

D. The infrared inspection report shall include both digital and IR pictures positioned side by side. Both the digital and IR pictures shall be clear and high quality. Fuzzy, grainy, or poorly illuminated pictures are not acceptable. The IR picture shall be provided with a temperature scale beside it, and an indication of the hot spot temperature in each picture. Reports shall be furnished in a 3-ring binder, with all pages printed in full color, with equipment assemblies separated by tabs.

1.10 PROTECTIVE DEVICE SETTING AND TESTING

A. The Contractor shall provide the services of a field services organization to adjust, set, calibrate and test all protective devices in the electrical system. The organization shall be a subsidiary of or have a franchise service agreement with the electrical equipment

manufacturer. The qualifications of the organization and resumes of the technicians as well as all data forms to be used for the field testing shall be submitted.

B. All protective devices in the electrical equipment shall be set, adjusted, calibrated and tested in accordance with the manufacturers' recommendations, the coordination study, and best industry practice.

C. Proper operation of all equipment associated with the device under test and its compartment shall be verified, as well as complete resistance, continuity and polarity tests of power, protective and metering circuits. Any minor adjustments, repairs and/or lubrication necessary to achieve proper operation shall be considered part of this Contract.

D. All solid state trip devices shall be checked and tested for setting and operation using manufacturers recommended test devices and procedures.

E. Circuit breakers and/or contactors associated with the above devices shall be tested for trip and close functions with their protective device.

F. When completed, the Contractor shall provide a comprehensive report for all equipment tested indicating condition, readings, faults and/or deficiencies in same. Inoperative or defective equipment shall be brought immediately to the attention of the Engineer.

G. Prior to placing any equipment in service, correct operation of all protective devices associated with this equipment shall be demonstrated by field testing under simulated load conditions.

1.11 POWER SYSTEM STUDIES

A. General

1. The Contractor shall provide short circuit studies, protective device evaluation studies, protective device coordination studies, and arc flash studies performed by a professional engineer, registered in the state of Florida, in accordance with Section 16055 – Power System Studies.

1.12 SCHEDULES AND FACILITY OPERATIONS

A. All testing procedures and schedules must be submitted to the Engineer for review and approval one (1) month prior to any work beginning. When testing has been scheduled, the Engineer must be notified 48 hours prior to any work.

1.13 MATERIALS HANDLING

A. Materials arriving on the job site shall be stored in such a manner as to keep material free of rust and dirt and so as to keep material properly aligned and true to shape. Rusty, dirty, or misaligned material will be rejected. Electrical conduit shall be stored to provide protection from the weather and accidental damage. Rigid non-metallic conduit shall be stored on even supports and in locations not subject to direct sun rays or excessive heat. Cables shall be sealed, stored, and handled carefully to avoid damage to the outer covering or insulation and damage from moisture and weather. Adequate protection shall

be required at all times for electrical equipment and accessories until installed and accepted. Materials damaged during shipment, storage, installation, or testing shall be replaced or repaired in a manner meeting with the approval of the Engineer. If space heaters are provided in a piece of electrical equipment, they shall be connected to a power source during storage. The Contractor shall store equipment and materials in accordance with Section 01600.

1.14 WARRANTIES

A. Unless otherwise specified in an individual specification section, all equipment and electrical construction materials furnished and installed under Division 16 shall be provided with a warranty in accordance with the requirements of Section 11000 - Equipment General Provisions, and the General Conditions.

1.15 TRAINING

A. Unless otherwise specified in an individual specification section, all training for equipment furnished and installed under Division 16 shall be provided in accordance with the requirements of Section 11000, Equipment General Provisions.

PART 2 – PRODUCTS

2.01 PRODUCT REQUIREMENTS

A. Unless otherwise indicated, the materials to be provided under this Specification shall be the products of manufacturers regularly engaged in the production of all such items and shall be the manufacturer's latest design. The products shall conform to the applicable standards of UL and NEMA, unless specified otherwise. International Electrotechnical Commission (IEC) standards are not recognized. Equipment designed, manufactured, and labeled in compliance with IEC standards is not acceptable.

B. All items of the same type or ratings shall be identical. This shall be further understood to include products with the accessories indicated.

C. All equipment and materials shall be new, unless indicated or specified otherwise.

D. The Contractor shall submit proof if requested by the Engineer that the materials, appliances, equipment, or devices that are provided under this Contract meet the requirements of Underwriters Laboratories, Inc., in regard to fire and casualty hazards. The label of or listing by the Underwriters Laboratories, Inc., will be accepted as conforming to this requirement.

2.02 SUBSTITUTIONS

A. Unless specifically noted otherwise, any reference in the Specifications or on the Drawings to any article, service, product, material, fixture, or item of equipment by name, make, or catalog number shall be interpreted as establishing the type, function, and standard of quality and shall not be construed as limiting competition. The Contractor, in such cases

may, at his option use any article, device, product, material, fixture, or item of equipment which in the judgment of the Engineer, expressed in writing, is equal to that specified.

2.03 CONCRETE

A. The Contractor shall furnish all concrete required for the installation of all electrical work, Concrete shall be Class A unless otherwise specified. Concrete and reinforcing steel shall meet the appropriate requirements of Division 3 of the Specifications.

B. The Contractor shall provide concrete equipment pads for all free standing electrical apparatus and equipment located on new or existing floors or slabs. The Contractor shall provide all necessary anchor bolts, channel iron sills, and other materials as required. The exact location and dimensions shall be coordinated for each piece of equipment well in advance of the scheduled placing of these pads. Equipment pads shall be 4 inches high unless otherwise indicated on the Drawings and shall conform to standard detail for equipment pads shown on the Contract Drawings. Equipment pads shall extend 3" beyond the sides of the equipment.

C. The Contractor shall provide concrete foundations for all free standing electrical apparatus and equipment located outdoors or where floors or slabs do not exist and/or are not or provided by others under this Contract. The Contractor shall provide all necessary anchor bolts, channel iron sills, and other materials as required. The location and dimensions shall be coordinated for each piece of equipment well in advance of the scheduled placing of the foundations. Equipment foundations shall be constructed as detailed on the Drawings or if not detailed on the Drawings shall be 6 inches thick minimum reinforced with #4 bars at 12-inch centers each way placed mid-depth. Concrete shall extend 6 inches minimum beyond the extreme of the equipment base and be placed on a compacted stone bed (#57 stone or ABC) 6 inches thick minimum.

2.04 RUBBER INSULATING MATTING

A. Rubber insulating matting shall be furnished and installed on the floor and in front of each piece of electrical equipment that is located indoors and installed under this Contract. Rubber insulating matting shall not be installed outdoors. The mat shall be long enough to cover the full length of the equipment. The mat shall be 1/4 inch thick with beveled edges, canvas back, solid type with corrugations running the entire length of the mat. The matting shall meet OSHA requirements and the requirements of ASTM D-178 for Type 2, Class 2 insulating matting. Matting shall be 36 inches wide, minimum. However, matting width shall be no less than the NEC working clearance for the equipment with which it is associated.

B. Matting shall be provided for the following equipment:

- PLC/RTU Enclosures
- Reduced Voltage Starters
- Panelboards
- Automatic Transfer Switches

- Generator Output Circuit Breakers
- Enclosed Circuit Breakers
- Generator Control Panels

PART 3 – EXECUTION

3.01 CUTTING AND PATCHING

A. Coordination

1. The Work shall be coordinated between all trades to avoid delays and unnecessary cutting, channeling and drilling. Sleeves shall be placed in concrete for passage of conduit wherever possible.

B. Damage

1. The Contractor shall perform all chasing, channeling, drilling and patching necessary to the proper execution of his Contract. Any damage to the building, structure, or any equipment shall be repaired by qualified mechanics of the trades involved at the Contractor's expense. If, in the Engineer's judgment, the repair of damaged equipment is unsatisfactory, then the Contractor shall replace damaged equipment at his own expense.

3.02 EXCAVATION AND BACKFILLING

A. The Contractor shall perform all excavation and backfill required for the installation of all electrical work. All excavation and backfilling shall be in complete accordance with the applicable requirements of Division 2.

3.03 CORROSION PROTECTION

A. Wherever dissimilar metals, except conduit and conduit fittings, come into contact, the Contractor shall isolate these metals as required with neoprene washers, nine (9) mil polyethylene tape, or gaskets.

- END OF SECTION -

SECTION 16055

POWER SYSTEM STUDIES

PART 1 – GENERAL

1.01 THE REQUIREMENT

A. The Contractor shall provide Short Circuit Studies, Equipment Evaluation Studies, Protective Device Coordination Studies, Load Flow Analyses, and Arc Flash Hazard Studies performed by a professional electrical engineer currently registered in the State of Florida.

B. At each site, the scope of work for these studies shall include the **entire** Facility. All existing and proposed electrical equipment and distribution systems at the facility shall be included in the studies. Contractor is hereby notified that all existing electrical equipment may not be shown on the drawings. As-built documentation for the Lido Drive site will be furnished by the City after the bid opening to facilitate completion of the studies.

C. Prior to receiving final approval of the distribution equipment shop drawings for the equipment proposed under this Contract and/or prior to release of that equipment for manufacture, the Preliminary Study Report, as specified herein, shall be submitted and approved. Contractor shall expedite the completion of the Preliminary Study Report so that final approval of proposed equipment is not delayed.

1.02 REFERENCE CODES AND STANDARDS

A. Institute of Electrical and Electronic Engineers (IEEE):

1. Standard 141, Recommended Practice for Electrical Power Distribution for Industrial Plants

2. Standard 241, Recommended Practice for Electrical Power Systems in Commercial Buildings

3. Standard 242, Recommended Practice for Protection and Coordination of Industrial and Commercial Systems

4. Standard 399, Recommended Practice for Industrial and Commercial Power System Analysis

5. Standard 519-1992, Recommended Practices and Requirements for Harmonic Control in Electric Power Systems

6. Standard 1584-2002/2004a, IEEE Guide for Performing Arc-Flash Hazard Calculations

B. American National Standards Institute (ANSI):

1. Standard C37.90, IEEE Standard for Relays and Relay Systems Associated with Electric Power Apparatus

2. Standard C37.91, Guide for Protective Relay Applications to Power Transformers

3. Standard C37.95, Guide for Protective Relaying of Utility-Consumer Interconnections.

4. Standard C37.96, Guide for AC Motor Protection

5. Standard C57.12.59, Guide Dry-Type Transformer Through-Fault Current Duration

6. Standard C.57.13, Standard Requirements for Instrumentation Transformers

7. Standard C57.109, Guide for Liquid-Immersed Transformer Through Fault-Current Duration

C. National Electrical Code (NEC)

D. National Fire Protection Agency (NFPA):

1. NFPA 70E, Standard for Electrical Safety in the Workplace (Latest edition)

1.03 SUBMITTALS

A. The Contractor shall submit for review and approval, one (1) paper copy of the Preliminary Power System Studies Report, one (1) paper copy of the Pre-final Power System Studies Report, and one (1) paper copies of the Final Power System Studies Report. One (1) electronic copy of each report shall be also submitted on a CD. The electronic version of each report shall be in the PDF file format. Each section of the report shall be placed in a separate PDF file to allow fast and easy navigation between sections. Additional details regarding the report requirements are specified elsewhere herein.

B. All Reports shall bear the signature and seal of the professional electrical engineer that performed the study.

C. The Contractor shall also submit one (1) electronic copy of the system model and all required database files generated by the software analysis package used. Files shall be placed on a CD and submitted with the Preliminary, Pre-final, and Final Power System Studies Reports.

1.04 QUALIFICATIONS

A. The Power System Studies shall be performed by a professional electrical engineer registered in the State of Florida. The registered professional electrical engineer shall have a minimum of five (5) years of experience in performing power systems studies.

B. The resume of the registered professional electrical engineer shall be submitted for approval prior to the start of work. An experience table shall also be provided detailing the power systems studies of similar scope to this Contract that have been performed by the proposed engineer over the last two (2) years. The table shall, at a minimum, list the facility owner's

name, facility contact person with phone number and email address, and overall scope of work that was provided.

PART 2 – PRODUCTS

2.01 POWER SYSTEM STUDIES

A. General

1. The Contractor shall provide Short Circuit Studies, Equipment Evaluation Studies, Protective Device Coordination Studies, Load Flow Analyses, and Arc Flash Hazard Studies for the entire electrical system. The studies shall be performed in accordance with IEEE 399, Recommended Practice for Industrial and Commercial System Power Analysis (IEEE Brown Book).

2. The studies shall include all portions of the electrical distribution system from the serving electric utility company protective devices, the normal and standby power sources down to and including the 208 volt equipment. The studies shall include all enclosed circuit breakers, automatic transfer switches, low voltage switchboards, reduced voltage soft starters, safety switches, and panelboards as shown on the Drawings. System connections and source combinations which result in maximum fault conditions shall be adequately covered in the study.

3. The studies shall be performed with the aid of SKM Systems Analysis Power Tools for Windows (PTW) software, Version 7.0 or newer. No other software analysis packages are acceptable.

B. Data Collection for the Studies

1. The Contractor shall collect all required utility transformer and service information for use in these studies. The serving electric utility representative contact information can be found in Section 16000, Basic Electrical Requirements.

2. One (1) field visit to the project site to collect pertinent data from existing equipment by the personnel performing the studies is permitted. The visit shall span as many days as required to collect all necessary information. This visit shall occur as soon after the Contract is awarded as possible and shall be coordinated with the City. The Contractor and personnel performing these studies are responsible for collecting all required data for these studies.

C. Short Circuit Studies

1. The short circuit study shall be performed in accordance with the latest editions of IEEE Std. 399 and IEEE Std. 141.

2. The study input data shall include the serving electric utility company's short circuit contribution, resistance and reactance components of the branch impedances, the X/R ratios, base quantities selected, and other source impedances.

3. Short circuit close and latch duty values and interrupting duty values shall be calculated on the basis of assumed three-phase bolted short circuits at each bus, automatic transfer switch, switchboard, distribution panelboard, pertinent branch circuit panel, enclosed circuit breakers and motor starters, and other significant locations through the system. The short circuit tabulations shall include symmetrical fault currents, and X/R ratios. For each fault location, the total duty on the bus, as well as the individual contribution from each connected branch, shall be listed with its respective X/R ratio.

4. The short circuit study report shall include recommendations for equipment selection based on calculated short circuit values and all input and output data from the software model.

D. Equipment Evaluation Studies

1. An equipment evaluation study shall be performed to determine the adequacy of both existing and proposed circuit breakers, panelboards, motor control centers, automatic transfer switches, busses, etc. located at the facility by tabulating and comparing the short circuit ratings of these devices with the calculated fault currents. Appropriate multiplying factors based on system X/R ratios and protective device rating standards shall be applied. A table shall be provided in the report showing the calculated fault currents and the corresponding short circuit ratings of the existing equipment.

E. Protective Device Coordination Studies

1. A protective device coordination study shall be performed to provide the necessary calculations and logic decisions required to select or to check the selection of power fuse ratings, protective relay characteristics and settings, ratios and characteristics of associated current transformers, and low voltage circuit breaker trip characteristics and settings.

2. The coordination study shall include all low voltage classes of equipment from the serving electric utility company service protective devices down to and including all adjustable circuit protective devices. The phase and ground overcurrent protection shall be included as well as settings of all other adjustable protective devices.

3. The time-current characteristics of the proposed protective devices shall be printed on a log-log scale. The plots shall include complete titles, representative one-line diagram and legends, significant motor starting characteristics, complete parameters of transformers, complete operating bands of low voltage circuit breaker trip curves and fuses. The coordination plots shall indicate the types of protective devices selected, proposed relay taps, time dial and instantaneous trip settings, transformer magnetizing inrush and ANSI transformer withstand parameters, cable thermal overcurrent withstand limits and significant symmetrical and asymmetrical fault currents. All restrictions of the National Electrical Code shall be adhered to and proper coordination intervals and separation of characteristic curves shall be maintained. The coordination plots for phase and ground protective devices shall be provided on a system basis. A sufficient number of separate curves shall be used to clearly indicate the coordination achieved.

4. The selection and settings of the protective devices shall be provided separately in a tabulated form listing circuit identification, IEEE device number, current transformer ratios and connections, manufacturer and type, range of adjustment and recommended settings.

F. Load Flow Analyses

1. A load-flow analysis shall be performed to determine the steady-state loading profile of the facility. The analysis shall be based on both the serving electric utility as a source and the standby generator as a source. From the results of the load flow analysis, the report shall indicate areas of overloaded conductors or equipment in the power distribution system design.

2. The report shall also include a total source load summary table, as well as single line diagrams showing only the load flow data.

3. Load flow analysis results shall also be presented in a tabular format in the report.

G. Arc Flash Hazard Studies

1. An Arc Flash Hazard Study shall be performed in accordance with IEEE Std. 1584, NFPA 70E, and OSHA 29-CFR, Part 1910 Subpart S.

2. The Arc Flash Hazard Study Report shall include but not be limited to the following:

a. An executive summary outlining the electrical distribution system

b. A brief overview of what arc flash hazards are and how to avoid them.

c. Serving electric utility information received. Copies of the information received shall be included in an appendix.

d. All assumptions made to complete the report

e. Definitions of key terms used in the report

f. Any recommendations to reduce the arc flash incident energies where they are found to exceed a hazard risk category of 2.

g. A PPE table that defines the Personnel Protective Equipment (PPE) classes and clothing descriptions identified in the report and labels.

h. Arc flash hazard warning labels as specified herein.

i. An NFPA 70E energized work permit for each location where a warning label is provided.

j. Arc flash evaluation summary sheets as specified herein

k. Separate set of single line diagrams that show incident energies, hazard risk categories, and protective device settings. Only pertinent arc flash hazard data shall be displayed on these single line diagrams. Data from all other study calculations shall not be shown.

3. The following parameters shall be used in the Arc Flash Hazard Study:

   a. Working distance for all equipment: 18 inches

   b. Maximum arc duration for all equipment: 2 seconds

   c. Incident energies, arc flash hazard boundaries, and hazard risk categories shall be calculated over a +/- 15% of calculated arcing fault current. The worst case incident energies that result shall be used in the study report.

   d. The equipment that connects to both the electric utility service and the standby power is in an open-transition configuration. The power sources will be incapable of paralleling with each other.

   e. The arc flash analysis shall be performed as if the facility is being supplied by the electric utility **and** as if the facility is being supplied by the standby generators. The worst case values from each calculation shall be used in the study report.

4. Arc Flash Warning Labels shall be produced for each location that allows access to energized parts. Labels shall be printed in color on adhesive backed labels. Labels shall be an ANSI Z535.4 compliant (minimum size 4 in. x 6 in.) thermal transfer type label. For incident energy values of less than 40 cal/cm^2, the labels shall have an orange colored header with the word “WARNING”. For incident energy values equal to and above 40 cal/cm^2, the labels shall have a red colored header with the word “DANGER”. Each label shall include the following information:

   a. Bus name

   b. System operating voltage

   c. Date of issue

   d. Flash hazard protection boundary

   e. Limited approach boundary

   f. Restricted boundary

   g. Prohibited boundary

   h. Incident energy level

   i. Required personal protective equipment class (Hazard risk category)

5. Arc Flash Evaluation Summary Sheets shall be produced. All values shown on the Summary Sheets shall be commensurate with the values shown on the single line diagrams. Summary sheets shall list the following:

a. Bus name

b. Upstream protective device name and protective device settings

c. Bus line-to-line voltage

j. Bus bolted fault

k. Protective device bolted fault current

f. Arcing fault current

g. Protective device trip / delay time

h. Breaker opening time

i. Solidly grounded column

j. Equipment type

k. Gap

l. Arc flash boundary

m. Working distance

n. Incident energy

o. Required personal protective equipment class (hazard risk category)

2.02 Study Reports

A. The results of the Power Systems Studies shall be summarized in a series of reports. A total of three (3) separate reports shall be provided as follows:

1. Preliminary Report – The Preliminary Report shall consist of all power systems studies as specified herein, with the following exceptions:

a. NFPA 70E energized work permits shall not be included

b Arc flash hazard warning labels shall be printed on plain paper for **format review purposes only**. Actual labels with calculated values shall not be included.

2. Pre-final Report – The Pre-final Report shall incorporate all comments received from the previous report review and shall include specific equipment data from the approved shop drawings of the proposed electrical equipment. The Pre-final Report shall consist of all power systems studies as specified herein, with the following exceptions:

a. NFPA 70E energized work permits shall not be included

b. Sample arc flash hazard warning labels shall be printed on plain paper for **calculated value review purposes**. Actual adhesive labels shall not be included.

3. Final Report – The Final Report shall consist of all power systems studies as specified herein, including final adhesive arc flash hazard warning labels. Final report shall incorporate all installed electrical equipment, including any field changes made during construction, and all comments received from the previous report review. All 'as-left' protective device settings shall be included in the report.

B. Reports shall be furnished in the quantities specified herein, neatly organized into properly identified 3" (minimum) 3-ring binders. Tabs shall clearly separate each section of the report. Each report shall begin with a table of contents. The following sections shall be included in the report as a minimum:

1. Executive Summary

2. Short Circuit Study

3. Equipment Evaluations

4. Protective Device Coordination Study

5 Load Flow Analysis

6. Arc Flash Study

C. All data used in the reports such as conductor sizes and lengths, motor sizes, utility contribution information, and the like shall be included in the appendices of the report.

D. All single line diagrams and time current curves shall be provided in the reports on 11x17 paper, properly folded to fit into the report binder. Use of standard 8.5x11 paper for these purposes is not permitted. Single line diagrams shall be appropriately split up between several sheets (if required) to allow the drawing scale to be adjusted in order to make text and symbols legible.

PART 3 – EXECUTION

3.01 FIELD ADJUSTMENT

A. Contractor shall adjust all relay and protective device settings according to the recommended settings table provided in the **approved** Pre-Final Report.

B. Contractor shall make minor modifications to equipment as required to accomplish conformance with short circuit and protective device coordination studies.

3.02 ARC FLASH LABELS

A Contractor shall place approved adhesive arc flash labels on equipment after the Final Report is reviewed and approved.

3.03 TRAINING

A. The Contractor shall train the City's qualified electrical personnel of the potential arc flash hazards associated with working on energized equipment (minimum of 4 hours). The training shall be certified for continuing education units (CEUs) by the International Association for Continuing Education Training (IACET) or equivalent.

- END OF SECTION -

SECTION 16111

CONDUIT

PART 1 – GENERAL

1.01 THE REQUIREMENT

A. The Contractor shall furnish and install conduits and conduit fittings to complete the installation of all electrically operated equipment as specified herein, indicated on the Drawings, and as required.

B. Requirements for conduit clamps, support systems, and anchoring are not included in this Section. Reference Section 16190, Electrical Supporting Devices, for these requirements.

C. Reference Section 16000, Basic Electrical Requirements.

1.02 CODES AND STANDARDS

A. Conduits and conduit fittings shall be designed, manufactured, and/or listed to the following standards as applicable:

1. American National Standards Institute (ANSI)

   a. ANSI B1.20.1 – Pipe Threads, General Purpose

   b. ANSI C80.5 – Electrical Rigid Aluminum Conduit

   c. ANSI FB 1 – Fittings, Cast Metal Boxes, and Conduit Bodies for Conduit, Electrical Metallic Tubing, and Cable

2. Underwriters Laboratories (UL)

   a. UL 1 – Standard for Flexible Metal Conduit

   b. UL 6 - Electrical Rigid Metal Conduit-Steel

   c. UL 6A – Electrical Rigid Metal Conduit-Aluminum, Red Brass, and Stainless Steel

   d. UL 360 – Standard for Liquid-tight Flexible Metal Conduit

   e. UL 467 – Grounding and Bonding Equipment

   f. UL 514B – Conduit, Tubing, and Cable Fittings

   g. UL 651 – Standard for Schedule 40 and 80 Conduit and Fittings

   h. UL 1479 – Standard for Fire Tests of Penetration Fire Stops

3. National Electrical Manufacturer's Association (NEMA)

   a. NEMA TC-2 – Electrical PVC Conduit

   b. NEMA TC-3 – PVC Fittings for Use with Rigid PVC Conduit and Tubing

4. Others

   a. ACI-318 – Building Code Requirements for Structural Concrete

1.03 SUBMITTALS

A. In accordance with the procedures and requirements set forth in the General Conditions and Section 01300 – Submittals, the Contractor shall obtain from the equipment manufacturer and submit the following:

   1. Shop Drawings

B. Each submittal shall be identified by the applicable specification section.

1.04 SHOP DRAWINGS

A. Each submittal shall be complete in all respects, incorporating all information and data listed herein and all additional information required for evaluation of the proposed equipment's compliance with the Contract Documents.

B. Partial, incomplete, or illegible submittals will be returned to the Contractor without review for resubmittal.

C. Shop drawings shall include but not be limited to:

   1. Product data sheets for conduits and fittings.

   2. Conduit identification methods and materials.

   3. Evidence of training for all personnel that will install PVC coated rigid metal conduit.

1.05 DEFINITIONS

A. Conduits are categorized by the circuit type of the wiring to be installed inside. Conduits are defined as follows:

   1. Power Conduits – Conduits that carry AC or DC power wiring from a source to a load. Conduits that carry lighting and receptacle wiring.

   2. Control Conduits – Conduits that carry AC or DC discrete control wiring between devices and/or equipment. Conduits that carry fiber optic cables between devices and/or equipment.

   3. Instrumentation Conduits – Conduits that carry AC or DC analog signal wiring between devices and/or equipment.

B. Where conduit tags are used on the drawings, conduit categories are indicated on the Drawings by the leading letter of the conduit tag. Conduit tag leading letters are defined as follows:

1. P – Power Conduit

2. C – Control Conduit

3. I – Instrumentation Conduit

PART 2 – PRODUCTS

2.01 GENERAL

A. Conduit and conduit fitting products are specified in the text that follows this article. Reference Part 3 herein for the application, uses and installation requirements of these conduits and conduit fittings.

B. All metallic conduit fittings shall be UL 514B and UL 467 Listed, and constructed in accordance with ANSI FB 1. All non-metallic fittings shall be UL 651 Listed and constructed in accordance with NEMA TC-3.

C. Where threading is specified herein for conduit fitting connections, the fittings shall be manufactured to accept conduit that is threaded to ANSI B1.20.1 requirements.

D. Conduit expansion fittings for all conduit materials of construction shall be capable of 4 inches of movement along the axis of the conduit for trade sizes 2 inches or less. Expansion fittings shall be capable of 8 inches of movement along the axis of the conduit for trade sizes greater than 2 inches.

E. Conduit deflection fittings for all conduit materials of construction shall be provided with a flexible neoprene outer jacket that permits up to ¾ inch of expansion/contraction along the axis of the conduit as well as up to ¾ inch of parallel misalignment between the conduit axes. Outer jacket shall be secured to the conduit hubs by stainless steel clamps.

F. Conduit seals shall either be Listed and labeled for 40% fill, or conduit reducing fittings and a trade size larger conduit seal shall be provided to achieve 25% or less fill within the seal. Percentage fill calculation shall be based on the conductors to be installed. Conduit seals shall be provided with breathers and/or drains where required by the NEC.

G. Conduit insulating bushings shall be constructed of plastic and shall have internal threading.

H. Additional conduit and conduit fitting requirements are specified in the articles that follow based on the specific conduit material of construction to be used.

2.02 RIGID NONMETALLIC CONDUIT AND ASSOCIATED FITTINGS

A. Conduit

1. Conduit shall be Schedule 40 or 80 (dependent on application) polyvinyl chloride (PVC) construction, manufactured in accordance with NEMA TC-2, UL 651 Listed,

and suitable for conductors with 90 degree C insulation.

B. Conduit Bodies for use with Rigid Nonmetallic Conduit

1. Conduit bodies shall be constructed of PVC. Conduit hubs shall be integral to the conduit body and shall be smooth inside to accept a glued conduit connection.

2. Conduit body shall be provided with cover that is affixed in place by stainless steel screws which thread directly into the conduit body. Covers that utilize wedge nuts or any other method of attachment to the conduit body are not acceptable. Covers shall be provided with matching gasket.

C. Conduit Couplings and Unions for use with Rigid Nonmetallic Conduit

1. Conduit couplings and unions shall be constructed of PVC and shall be smooth inside to accept a glued conduit connection.

D. Conduit Expansion and Deflection Fittings for use with Rigid Nonmetallic Conduit

1. Conduit expansion fittings and conduit deflection fittings shall be constructed of PVC and shall be smooth inside to accept a glued conduit connection.

E. Conduit Termination Fittings for use with Rigid Nonmetallic Conduit

1. Conduit hubs shall be constructed of PVC and shall be smooth inside to accept a glued conduit connection. Hubs shall have external threads and an accompanying PVC locknut, and shall be watertight when assembled to an enclosure.

2. Conduit locknuts shall be constructed of zinc plated steel. Locknuts shall have internal threading. Locknuts constructed of PVC and locknuts with integral gasket or seal are not acceptable.

3. Conduit end bells shall be constructed of PVC and shall be smooth inside to accept a glued conduit connection. End bell shall have a smooth inner surface that curves outward towards the edge of the fitting.

2.03 PVC COATED RIGID ALUMINUM CONDUIT AND ASSOCIATED FITTINGS

A. General

1. Where an external coating of polyvinyl chloride (PVC) is specified for conduit and fittings, the coating shall be 40 mil (minimum) thickness. Where an internal coating of urethane is specified for conduit and fittings, the coating shall be 2 mil (minimum) thickness.

2. All conduit fittings shall have a sealing sleeve constructed of PVC which covers all connections to conduit. Sleeves shall be appropriately sized so that no conduit threads will be exposed after assembly.

B. Conduit

1. Conduit shall be made of heavy wall high strength 6063 alloy aluminum with temper designation T1. Conduit shall be manufactured in accordance with ANSI C80.5, and

shall be UL 6A Listed.

2. Conduit shall be provided with factory-cut 3/4 inch per foot tapered threads at each end in accordance with ANSI B1.20.1. Threads shall be cut prior to coating to ensure corrosion protection adequately protects the threads. Conduit shall be provided with a matching coupling on one end and a color-coded thread protector on the other.

3. Conduit shall be coated on the exterior with a PVC jacket and coated on the interior with a layer of urethane. Conduit shall be manufactured in accordance with NEMA RN-1.

C. Conduit Bodies for use with PVC Coated Rigid Aluminum Conduit

1. Conduit bodies shall be constructed of a copper-free aluminum which is coated on the exterior with a PVC jacket and coated on the interior with a layer of urethane. Conduit bodies shall have integral threaded conduit hubs.

2. Conduit bodies for all other areas shall be constructed of a copper-free aluminum which is coated on the exterior with a PVC jacket and coated on the interior with a layer of urethane. Covers shall be affixed in place by stainless steel screws which thread directly into the conduit body and have a plastic encapsulated head. Covers that utilize wedge nuts or any other method of attachment to the conduit body are not acceptable. Covers shall be provided with matching gasket.

D. Conduit Couplings, Nipples, and Unions for use with PVC Coated Rigid Aluminum Conduit

1. Couplings and nipples shall be threaded and shall be constructed of copper-free aluminum which is coated on the exterior with a PVC jacket and coated on the interior with a layer of urethane. Split-type couplings that use compression to connect conduits are not acceptable.

2. Unions shall be threaded, rain-tight, and constructed of a copper-free aluminum which is coated on the exterior with a PVC jacket and coated on the interior with a layer of urethane.

E. Conduit Expansion and Deflection Fittings for use with PVC Coated Rigid Aluminum Conduit

1. Conduit expansion fittings and conduit deflection fittings shall be constructed of a copper-free aluminum which is coated on the exterior with a PVC jacket and coated on the interior with a layer of urethane. Expansion and deflection fittings shall have threaded conduit connections.

2. Expansion fittings shall have an integral bonding jumper and deflection fittings shall have an external bonding jumper.

F. Conduit Seals for use with PVC Coated Rigid Aluminum Conduit

1. Conduit seals shall be constructed of a copper-free aluminum which is coated on the exterior with a PVC jacket and coated on the interior with a layer of urethane. Conduit seals shall have threaded conduit connections.

G. Conduit Termination Fittings for Use with PVC Coated Rigid Aluminum Conduit

1. Conduit hubs shall be constructed of a copper-free aluminum which is coated on the exterior with a PVC jacket and coated on the interior with a layer of urethane. Hubs shall have threaded connections to the conduit and enclosure. Hubs shall have a plastic insulated throat and shall be watertight when assembled to an enclosure.

2. Conduit bonding bushings shall be constructed of zinc plated malleable iron which is coated on the exterior with a PVC jacket and coated on the interior with a layer of urethane. Bonding bushings shall have a threaded conduit connection. Bonding bushing shall be provided with properly sized set screw for connecting bonding conductor and an integral plastic insulator rated for 150 degrees C located in the throat.

2.04 RIGID ALUMINUM CONDUIT AND ASSOCIATED FITTINGS

H. Conduit

1. Conduit shall be made of heavy wall high strength 6063 alloy aluminum with temper designation T1. Conduit shall be manufactured in accordance with ANSI C80.5 and shall be UL 6A Listed.

2. Conduit shall be provided with factory-cut 3/4 inch per foot tapered threads at each end in accordance with ANSI B1.20.1. Threads shall be cut prior to galvanizing to ensure corrosion protection adequately protects the threads. Conduit shall be provided with a matching coupling on one end and a color-coded thread protector on the other.

I. Conduit Bodies for use with Rigid Aluminum Conduit

1. Conduit bodies shall be constructed of copper-free aluminum which is coated with an aluminum enamel finish. Conduit bodies shall have integral threaded conduit hubs.

2. Conduit bodies shall be provided with stamped copper-free aluminum covers that are affixed in place by stainless steel screws which thread directly into the conduit body. Covers that utilize wedge nuts or any other method of attachment to the conduit body are not acceptable. Covers shall be provided with matching gasket.

J. Conduit Couplings, Nipples, and Unions for use with Rigid Aluminum Conduit

1. Couplings and nipples shall be threaded and shall be constructed of heavy wall high strength 6063 alloy aluminum with temper designation T1. Split-type couplings that use compression to connect conduits are not acceptable.

2. Unions shall be threaded, rain-tight, and constructed of copper-free aluminum which is coated with an aluminum enamel finish.

K. Conduit Expansion and Deflection Fittings for use with Rigid Aluminum Conduit

1. Conduit expansion fittings and conduit deflection fittings shall be constructed of copper-free aluminum which is coated with an aluminum enamel finish. Expansion and deflection fittings shall have threaded conduit connections.

2. Expansion fittings shall have an integral bonding jumper and deflection fittings shall have an external bonding jumper.

L. Conduit Seals for use with Rigid Aluminum Conduit

1. Conduit seals shall be constructed of copper-free aluminum which is coated with an aluminum enamel finish. Conduit seals shall have threaded conduit connections.

M. Conduit Termination Fittings for use with Rigid Aluminum Conduit

1. Conduit hubs shall be constructed of copper-free aluminum and shall have threaded connections to the conduit and enclosure. Hubs shall have a plastic insulated throat and shall be watertight when assembled to an enclosure.

2. Conduit locknuts shall be constructed of copper-free aluminum. Locknuts shall have internal threading. Locknuts with integral gasket or seal are not acceptable. Locknuts shall have integral bonding screw where required for proper bonding.

3. Conduit bonding bushings shall be constructed of copper-free aluminum. Bonding bushings shall have a threaded conduit connection. Bonding bushing shall be provided with properly sized set screw for connecting bonding conductor and an integral plastic insulator rated for 150 degrees C located in the throat.

2.05 LIQUID TIGHT FLEXIBLE METAL CONDUIT (LFMC) AND ASSOCIATED FITTINGS

A. Conduit

1. Conduit shall be manufactured using a single strip of hot dip galvanized high strength steel alloy, helically formed into a continuously interlocked flexible metal conduit. Trade size 1-1/4” and smaller conduits shall be provided with an integrally woven copper bonding strip.

2. Conduit shall be covered with an outside PVC jacket that is UV resistant, moisture-proof, and oil-proof. Conduit shall be UL 360 Listed.

B. Conduit Termination Fittings for use with LFMC

1. Conduit termination fittings shall be constructed of either 304 stainless steel or an electro-galvanized malleable iron alloy which is coated on the exterior with a 40 mil (minimum) PVC jacket and coated on the interior with a 2 mil (minimum) layer of urethane. PVC coated fittings shall have a sealing sleeve constructed of PVC which covers the connection to conduit.

2. Termination fittings shall have a threaded end with matching locknut and sealing ring for termination to equipment and shall have an integral external bonding lug where required for proper bonding. Termination fittings shall have a plastic insulated throat and shall be watertight when assembled to the conduit and equipment.

2.06 FLEXIBLE METAL CONDUIT (FMC) AND ASSOCIATED FITTINGS

A. Conduit

1. Conduit shall be manufactured using a single strip of hot dip galvanized high strength steel alloy, helically formed into a continuously interlocked flexible metal conduit. Conduit shall be UL 1 Listed.

B. Conduit Termination Fittings for use with FMC

1. Conduit termination fittings shall be constructed of an electro-galvanized malleable iron alloy. Fittings shall have a threaded end with matching locknut for termination to equipment, and a compression-style connection to the associated conduit.

2.07 CONDUIT BENDS

A. Rigid conduit bends, both factory fabricated and field fabricated, shall meet the same requirements listed in the articles above for the respective conduit type and material of construction.

B. Conduit bend radii for standard radius bends shall be no less than as follows:

TRADE SIZE	¾”	1”	1 ¼”	1 ½”	2”	2 ½”	3”	3 ½”	4”	5”	6”
MIN. RADIUS	4 ½”	5 ¾”	7 ¼”	8 ¼”	9 ½”	10 ½”	13”	15”	16”	24”	30”

C. Conduit bend radii for long radius bends shall be no less than as follows:

TRADE SIZE	¾”	1”	1 ¼”	1 ½”	2”	2 ½”	3”	3 ½”	4”	5”	6”
MIN. RADIUS	N/A	12”	18”	24”	30”	30”	36”	36”	48”	48”	60”

2.08 MISCELLANEOUS

A. Conduit Periphery Sealing

2. The sealing of the exterior surface of conduits to prevent water and/or air from passing around the conduit periphery from one space to another (where required) shall be through the use of one of the following:

a. A conduit sleeve and pressure bushing sealing system. Acceptable products are FSK by OZ-GEDNEY, Link-Seal by Crouse-Hinds, or Engineer approved equal.

b. A conduit sleeve that is two trade sizes larger than the conduit being sealed, with 2-hour fire rated UL 1479 Listed caulk filling the entire void between the conduit and sleeve. This method is only suitable for penetrations in non-fire rated walls and floors between spaces within buildings. This method shall not be used for the sealing of conduits leaving a building and/or structure.

2. Conduit penetrations through fire-rated walls and floors shall be made with an approved UL 1479 Listed product specifically intended for the trade size of the conduit.

B. Primer and Cement

1. Nonmetallic conduit shall be cleaned with primer and connected to fittings with the manufacturer's recommended cement that is labeled Low VOC.

C. Galvanizing Compounds

1. Galvanizing compounds for field application shall be the cold-applied type, containing no less than 93% pure zinc.

D. Conduit Interior Sealing

1. The sealing of the inside of conduits against water ingress shall be achieved through the use of <u>one</u> of the following:

a. Two-part expanding polyurethane foam sealing compound, dispensed from a single tube which mixes the two parts as it is injected into the conduit. Expanding foam shall be compatible with the conduit material of construction as well as the outer jacket of the cables in the conduit. Acceptable products are Q-Pak 2000 by Chemque, FST by American Polywater Corporation, or Hydra-seal S-60 by Duraline.

b. Inflatable bag that provides seal around cables and around inside diameter of conduit. Provide appropriate quantity of additional fittings for applications with three or more cables in the conduit to be sealed. Acceptable products are Rayflate by Raychem, or Engineer approved equal. This sealing method is only applicable to conduits trade size 2" and larger.

c. Neoprene sealing ring provided with the required quantity and diameter of holes to accommodate the cables in each conduit. Sealing ring shall be compressed by two stainless steel pressure plates. Acceptable products are type CSB by OZ-GEDNEY, or Engineer approved equal. This sealing method is only applicable to metallic conduits containing 4 cables or less.

2. The use of aerosol-based expanding foam sealants or any other method of sealing against water ingress not listed above is not acceptable.

E. Pull Rope

1. Pull ropes for empty and spare conduits shall be woven polyester, ½" wide, with a minimum tensile strength of 1250 lbs.

2. Pull ropes for the Contractors use in installing conductors shall be the size and strength required for the pull and shall be made of a non-metallic material.

PART 3 – EXECUTION

3.01 GENERAL

A. Minimum trade size for all rigid conduits shall be ¾ inch in exposed applications and 1 inch in embedded applications. Conduits installed within ductbanks shall be allowed to be increased in size to trade size 2 inch, at the Contractor's option, to accommodate the saddle size of the ductbank spacers. However, no combining of circuits shall be allowed in the larger conduits.

B. Minimum trade size for flexible conduits (where specifically allowed herein) shall be ½ inch in all applications.

C. All conduit routes within structures may not be shown on the Drawings. Unless otherwise indicated, conduits shall be installed concealed wherever practical and within the limitations specified herein. All other conduits not capable of being installed concealed shall be installed exposed. Where shown on the drawings, the line type used for conduit routing indicates which conduits shall be installed concealed and which shall be installed exposed.

D. Empty and/or spare conduits shall be provided with pull ropes which have no less than 12 inches of slack at each end.

E. Nonmetallic conduits for installations requiring less than a factory length of conduit shall be field cut to the required length. The cut shall be made square, cleaned of debris, and primer shall be applied to ready each joint for fusing. Conduits shall then be fused together with the conduit manufacturer's approved cement compound.

F. Metallic conduits for installations requiring less than a factory length of conduit shall be field cut to the required length. The cut shall be made square, be cleaned of all debris and be de-burred, then threaded. Conduit threading performed in the field shall be ¾ inch per foot tapered threads in accordance with ANSI B1.20.1.

G. Conduits shall be protected from moisture, corrosion, and physical damage during construction. Install dust-tight and water-tight conduit fittings on the ends of all conduits immediately after installation and do not remove until conductors are installed.

H. Conduits shall be installed to provide no less than 12 inches clearance from pipes that have the potential to impart heat upon the conduit. Such pipes include, but are not limited to, hot water pipes, steam pipes, exhaust pipes, and blower air pipes. Clearance shall be maintained whether conduit is installed in parallel or in crossing of pipes.

I. Where non-metallic instrumentation conduits are installed exposed, the following clearances to other conduit types shall be maintained:

   1. Instrumentation conduits installed parallel to conduits with conductors energized at 480V or above shall be 18 inches.

   2. Instrumentation conduits installed parallel to conduits with conductors energized at 240V and below shall be 12 inches.

3. Instrumentation conduits installed at right angles to conductors energized at 480V and below shall be 6 inches.

4. Instrumentation conduits installed at right angles to conductors energized at voltages above 480V shall be 12 inches.

J. Where conduit fittings installed at termination points do not include an integral insulated bushing, an insulated bushing shall be installed.

K. Conduits which serve multi-section equipment shall be terminated in the section where wiring terminations will be made.

L. Conduits shall not penetrate the floors or walls inside liquid containment areas without specific written authorization from the Engineer. Liquid containment areas are indicated on the Drawings.

M. In no case shall conduit be supported or fastened to another pipe or installed to prevent the removal of other pipe for repairs.

N. The appropriate specialized tools shall be used for the installation of PVC coated conduit and conduit fittings. No damage to the PVC coating shall occur during installation. Conduit and conduit fittings with damaged PVC coating shall be replaced at the Contractor's cost. The use of PVC coating touch-up compounds is not permitted, except where used to seal the gap between conduit and PVC sleeve of attached fitting.

O. Conduits which emerge from within or below concrete encasement shall be PVC coated rigid metal conduit in accordance with Standard Detail 1611102 where the conduit is not protected by an equipment enclosure that surrounds the conduit on all sides at the point where it emerges from the encasement.

P. Aluminum conduits shall not be installed in direct contact with concrete surfaces. Where aluminum conduits are routed along concrete surfaces, they shall be installed with one-hole electro-galvanized malleable iron alloy straps with matching clamp-backs to space the conduit ¼ inch away from concrete surface. Where aluminum conduit passes through concrete, CMU or brick walls, the penetration shall be made such that the aluminum conduit does not come in contact with concrete, CMU, brick or mortar.

3.02 CONCEALED AND EMBEDDED CONDUITS

A. Conduits are permitted to be installed concealed and/or embedded with the following requirements:

1. Conduits shall not be installed horizontally when concealed within CMU walls, only vertical installation is acceptable.

2. Conduits installed embedded within concrete floors or walls shall be located so as not to affect the designed structural strength of the floor or wall. Embedded conduits shall be installed in accordance with Standard Detail 0331604 and ACI-318.

3. Where conduit bends emerge from concrete embedment, none of the curved portion of the bend shall be visible. Only the straight portion of the bend shall be visible.

4. Where multiple conduits emerge from concrete embedment or from concealment below a concrete floor, ample clear space shall be provided between conduits to allow for the appropriate and required conduit termination fittings to be installed.

5. Conduits installed embedded within concrete encasement of any kind shall be installed such that conduit couplings for parallel conduits are staggered so that they are not side by side.

B. Conduits are NOT permitted to be installed concealed and/or embedded for the following situations:

1. Conduits shall not be installed embedded within any water-bearing floors or walls. Conduits shall not be installed embedded within any liquid containment area floors or walls.

2. Conduits shall not be installed concealed within CMU walls or gypsum walls that are adjacent to indoor Type 1 or Type 2 chemical storage/transfer areas.

3.03 CONDUIT USES AND APPLICATIONS

A. Rigid Conduit

1. Unless otherwise indicated on the drawings, rigid conduit for non-hazardous areas shall be furnished and installed in the materials of construction as follows:

RIGID CONDUIT FOR NON-HAZARDOUS AREAS		
	CONDUIT CATEGORY BY WIRING/CIRCUIT TYPE	
INSTALLATION AREA DESIGNATION/ SCENARIO	**Power and Control**	**Instrumentation**
Exposed in indoor dry non-process areas	Rigid aluminum conduit	Same as Power and Control
Exposed in outdoor areas	Rigid aluminum conduit	Same as Power and Control
Concealed within underground direct-bury or concrete-encased ductbanks	Schedule 40 rigid non-metallic PVC conduit	PVC coated rigid aluminum conduit
Concealed within non-elevated (i.e. "slab-on-grade" construction) concrete slabs	Schedule 40 rigid non-metallic PVC conduit	PVC coated rigid aluminum conduit

RIGID CONDUIT FOR NON-HAZARDOUS AREAS		
	CONDUIT CATEGORY BY WIRING/CIRCUIT TYPE	
INSTALLATION AREA DESIGNATION/ SCENARIO	Power and Control	Instrumentation
Concealed within elevated concrete slabs	Schedule 40 rigid non-metallic PVC conduit	PVC coated rigid aluminum conduit
Concealed below concrete slabs (within earth or fill material)	Schedule 40 rigid non-metallic PVC conduit	PVC coated rigid aluminum conduit
Concealed within concrete walls	Schedule 40 rigid non-metallic PVC conduit	PVC coated rigid aluminum conduit
Concealed within CMU walls	Schedule 40 rigid non-metallic PVC conduit	PVC coated rigid aluminum conduit
Emerging from concealment within or below a concrete floor and transitioning to exposed conduit (Reference Detail 1611102)	PVC coated rigid aluminum conduit	Same as Power and Control

2. The tables for the materials of construction for conduits are intended to exhaustively cover all possible scenarios and installation areas under this Contract. However, if a scenario or installation area is found that is not explicitly governed by these tables, it shall be assumed for bid purposes that the conduit material of construction is to be PVC coated rigid aluminum conduit. This discrepancy shall be brought to the attention of the Engineer (in writing) immediately for resolution.

B. Conduit Bends

1. All conduit bends shall be the same material of construction as the rigid conduit listed in the tables above, with the following exceptions:

   a. All 90-degree bends or combinations of adjacent bends that form a 90 degree bend where concealed within concrete or below a concrete slab shall be PVC coated rigid aluminum conduit.

2. Field fabricated bends of metallic conduit shall be made with a bending machine and shall have no kinks. Field fabricated standard radius and long radius bends shall have minimum bending radii in accordance with the associated tables in Part 2 herein.

3. Field bending of non-metallic conduits is not acceptable, factory fabricated bends shall be used.

4. Long radius bends shall be furnished and installed for the following specific applications, all other bends shall be standard radius:

   a. All conduits containing fiber optic cable.

   b. All conduits containing shielded VFD cable.

   c. Where specifically indicated on the Drawings.

C. Flexible Conduit

1. Flexible conduit shall only be installed for the limited applications specified herein. Flexible conduit shall not be installed in any other application without written authorization from the Engineer. Acceptable applications are as follows:

   a. Connections to motors and engine-generator sets (and similar vibrating equipment)

   b. Connections to solenoid valves and limit switches

   c. Connections to lighting fixtures installed in suspended ceilings

   d. Connections to lighting transformers

   e. Connections to pre-fabricated equipment skids

   f. Connections to HVAC equipment

   g. Connections to instrument transmitters and elements

   h. Where specifically indicated in the Standard Details

2. Flexible conduit length shall be limited to three (3) feet, maximum. Flexible conduit shall not be installed buried or embedded within any material.

3. Unless otherwise indicated on the drawings, flexible conduit for non-hazardous areas shall be furnished and installed in the materials of construction as follows:

FLEXIBLE CONDUIT FOR NON-HAZARDOUS AREAS		
	CONDUIT CATEGORY BY WIRING/CIRCUIT TYPE	
INSTALLATION AREA DESIGNATION/SCENARIO	**Power and Control**	**Instrumentation**
Exposed in indoor dry non-process areas	Flexible metal conduit	Same as Power and Control

Exposed in outdoor areas	Liquid-tight flexible metal conduit	Same as Power and Control

3.04 CONDUIT FITTING USES AND APPLICATIONS

A. General

1. Conduit fittings shall be furnished and installed in the materials of construction as indicated in Part 2, herein. Conduit fitting materials of construction are dependent on the material of construction used for the associated conduit.

2. Conduit fittings shall be provided in the trade size and configuration required to suit the application.

B. Conduit Bodies

1. Conduit bodies shall be installed where wire pulling points are desired or required, or where changes in conduit direction or breaking around beams is required.

2. Where conduit bodies larger than trade size 2 inches are intended to be used as a pull-through fitting during wire installation, oversized or elongated conduit bodies shall be used. Oversized or elongated conduit bodies shall not be required if the conduit body is intended to be used as a pull-out point during wire installation.

C. Conduit Nipples and Unions

1. Conduits with running threads shall not be used in place of 3-piece couplings (unions) or close nipples. After installation of a conduit fitting of any kind, there shall be no more than ¼ inch of exposed threads visible. Factory fabricated all-thread nipples may be used between adjacent enclosures, however, the same restriction applies regarding the length of exposed threads that are visible.

D. Conduit Expansion and Deflection Fittings

1. Conduit expansion fittings shall be installed where required by the NEC and where indicated on the Drawings. Expansion fittings shall also be installed for exposed straight metallic conduit runs of more than 75 feet, in both indoor and outdoor locations. Expansion fittings for runs of non-metallic conduit shall be installed in accordance with the NEC.

2. Conduit deflection fittings shall be installed where required by the NEC and where conduits are installed (exposed and concealed) across structural expansion joints.

E. Conduit Seals

1. Conduit seals shall be installed for conduits as required by the NEC.

F. Conduit Termination Fittings

1. Where conduits terminate at enclosures with a NEMA 4, 4X, or 3R rating and the enclosure does not have integral conduit hubs, an appropriately sized watertight

conduit hub shall be installed to maintain the integrity of the enclosure. The use of locknuts with integral gasket in lieu of watertight conduit hubs is not acceptable.

2. Where conduits terminate at enclosures that do not require conduit hubs, a two-locknut system shall be used to secure the conduit to the enclosure. One locknut shall be installed on the outside of the enclosure, and the other inside, drawn tight against the enclosure wall. The locknut on the interior of the enclosure shall be the type with integral bonding lug, or a conduit bonding bushing may be used in place of the locknut.

3. Conduits shall not be installed such that conduit fittings penetrate the top of any enclosure located outdoors, except in cases where specifically required by the serving electric utility. Conduits which serve outdoor equipment or an enclosure from above shall instead be routed into the side of the enclosure at the bottom. The conduit termination fitting shall be provided with a conduit drain to divert moisture from the raceway away from the enclosure.

3.05 MISCELLANEOUS

A. Conduit Periphery Sealing

1. All conduit penetrations through exterior walls shall be sealed around the periphery using the appropriate products specified in Part 2 herein to prevent air and/or water entry into the structure.

2. All conduit penetrations through interior walls and floors shall be sealed through the use of with conduit sleeves and caulk as specified in Part 2 herein. Alternatively, mortar may be used to seal around the conduit periphery.

3. Conduit penetrations through fire-rated walls as floors shall be made with the appropriate fire rated penetration product.

B. Conduit Interior Sealing

1. All conduits (including spares) entering a structure below grade shall be sealed on the interior of the conduit to prevent water ingress. Sealing shall be at an accessible location in the conduit system located within the building structure and shall be via one of the methods specified in Part 2 herein. If conduit sealing cannot be achieved at an accessible location within the building structure, sealing shall be placed in the conduits in the nearest manhole or handhole outside the structure.

2. All conduits (including spares) which transition between a warm, humid space and a cool conditioned space shall be sealed on the interior of the conduit against water ingress on the warm side of the divider between the two spaces. Sealing shall be at an accessible location in the conduit system and shall be via one of the methods specified in Part 2 herein.

3.06 CONDUIT IDENTIFICATION

A. Exposed conduits shall be identified at the source, load, and all intermediate components of the raceway system. Examples of intermediate components include but are not limited

to junction boxes, pull boxes, and disconnect switches. Identification shall be by means of an adhesive label with the following requirements:

1. Labels shall consist of an orange background with black text.

2. At the source end of the conduit, the text shall indicate the load equipment name. This line shall consist of the word "TO:" and the text in the 'TO' column of the conduit and wire schedule or as called out on the single line and riser diagrams (e.g. TO: Raw Sewage Pump No. 1). At the load end of the conduit, the text shall indicate the source equipment name. This second line shall consist of the word "FROM:" and the text in the 'FROM' column of the conduit and wire schedule or as called out on the single line and riser diagrams (e.g. FROM: MCC-SPS). This requirement applies only to the source and load ends of the conduit, and not anywhere in between.

3. At intermediate components of the raceway system, the label shall consist of two lines of text. The first shall indicate the source of the conduit, as described above. The second shall indicate the load, as described above.

4. For conduits trade sizes ¾" through 1½", the text shall be a minimum 18 point font. For conduits trade size 2" and larger, the text shall be a minimum 24 point font.

5. Label height shall be ¾" minimum, and length shall be as required to fit required text. The label shall be installed such that the text is parallel with the axis of the conduit. The label shall be oriented such that the text can be read without the use of any special tools or removal of equipment.

6. Labels shall be installed after each conduit is installed and, if applicable, after painting. Labels shall be printed in the field via the use of a portable label printing system. Handwritten labels are not acceptable.

7. Labels shall be made of permanent vinyl with adhesive backing. Labels made of any other material are not acceptable.

B. Conduits that are not exposed but installed beneath free standing equipment enclosures shall be identified by means of a plastic tag with the following requirements:

1. The tag shall be made of white Tyvek material, and have an orange label with black text, as described above, adhered to it. Text for the label shall be as specified in subparagraph A-2 above.

2. The tag shall be affixed to the conduit by means of a nylon cable tie. The tag shall be of suitable dimensions to achieve a minimum text size of 18 points.

C. Conduits for lighting and receptacle circuits shall not require identification.

D. Any problems or conflicts with meeting the requirements above shall immediately be brought to the attention of the Engineer for a decision.

3.06 TESTING

A. All tests shall be performed in accordance with the requirements of the General Conditions and Division 1. The following tests are required:

1. All conduit installed below grade or concrete encased shall be tested to ensure continuity and the absence of obstructions by pulling through each conduit a swab followed by a mandrel 85% of the conduit inside diameter. After testing, all conduits shall be capped after installation of a suitable pulling rope.

3.07 TRAINING OF INSTALLATION PERSONNEL

A. All Contractor personnel that install PVC coated RGS conduit shall be trained by the PVC coated RGS conduit manufacturer. Training shall include proper conduit system assembly techniques, use of tools appropriate for coated conduit systems, and field bending/cutting/threading of coated conduit. Training shall have been completed within the past 24 months prior to the Notice to Proceed on this Contract to be considered valid. Contractor personnel not trained within this timeframe shall not be allowed to install coated conduit, or shall be trained/re-trained as required prior to commencement of conduit installation.

- END OF SECTION -

SECTION 16118

UNDERGROUND ELECTRICAL

PART 1 – GENERAL

1.01 THE REQUIREMENT

A. The Contractor shall furnish and install underground duct systems, electric manholes, and electric handholes as specified herein and as indicated on the Drawings. The work shall be complete and shall include excavation, concrete construction, backfilling, and all materials, items, and components required for a complete system.

B. The provisions of this Division are applicable to all underground conduit work. All work shall be coordinated with that of the various utility companies and other Contractors. The Contractor shall adhere to all utility company requirements including the serving electric utility.

C. Reference Section 16000, Basic Electrical Requirements; Section 16111, Conduit; Section 16170, Grounding and Bonding; the applicable sections of Division 2, Sitework; Section 03200, concrete reinforcement; and 03300, Cast-In-Place Concrete.

1.02 CODES AND STANDARDS

A. Products specified herein shall be designed, manufactured, and/or listed to the following standards as applicable:

1. AASHTO H20

2. ANSI/SCTE 77-2010 – Specification for Underground Enclosure Integrity

1.03 SUBMITTALS

A. In accordance with the procedures and requirements set forth in the General Conditions and Section 01300, Submittals, the Contractor shall obtain from the equipment manufacturer and submit Shop Drawings. Each submittal shall be identified by the applicable Specification Section.

1.04 SHOP DRAWINGS

A. Each submittal shall be complete in all respects, incorporating all information and data listed herein and all additional information required for evaluation of the proposed equipment's compliance with the Contract Documents.

B. Partial, incomplete, or illegible submittals will be returned to the Contractor without review for resubmittal.

C. Shop drawings shall include but not be limited to, the following:

1. Product data sheets.

2. Outline and dimensional drawings including detailed sections of the manholes, handholes, and/or pullboxes.

3. Materials specifications and structural calculations for the manholes sealed by a Professional Engineer licensed in the State of Florida.

1.04 IDENTIFICATION

A. Each cover shall be lettered with the word “Electric”, the manhole or handhole identification number (e.g. UMH-1, EMH-1, EHH-1, etc.), manufacturer's name or trademark, and such other information as the manufacturer may consider necessary, or as specified, for complete identification.

PART 2 – PRODUCTS

2.01 MANUFACTURERS

A. The material covered by this Specification is intended to be standard material of proven performance as manufactured by reputable concerns. Material shall be fabricated, constructed and installed in accordance with the best practices of the trade, and shall operate satisfactorily when installed as specified herein and indicated on the Drawings.

2.02 DUCT SYSTEM

A. Underground duct system shall consist of parallel runs of Schedule 40 PVC conduit or PVC coated rigid galvanized steel conduit encased in concrete envelopes, unless otherwise specified herein or indicated on the Drawings.

B. Nonmetallic conduit joints shall be made with standard Schedule 40 PVC couplings and PVC solvent cement of the same manufacturer as the conduit. All PVC conduit shall be supplied by the same manufacturer. All joints shall be staggered, installed in accordance with the manufacturer’s recommendations, and made watertight.

C. Base and intermediate conduit spacers shall be furnished to provide a minimum of two-inch (2”) separation between conduits. Conduit spacers shall be provided in the proper size as required for the conduit that they secure. For example, a 4” conduit spacer shall not be used to secure a 2” conduit. Conduit spacers shall be as manufactured by Carlon Electrical Products Company, Aeroquip Corporation, Underground Devices, Incorporated, or equal.

D. Unless otherwise indicated, all 90-degree conduit elbows and/or combinations of adjacent conduit elbows that form a 90 degree bend shall be PVC coated rigid metal conduit.

2.03 ELECTRIC MANHOLES

A. The concrete manholes shall be complete with metal frames and covers of size and location as specified herein and shown on the Drawings.

B. Manhole frames and covers shall be Neenah R-1640CS, or equal, with Type A anchor ring. Entire manhole assembly shall be AASHTO H20 heavy duty rated. Covers shall be furnished with drop handles.

C. All electric manholes shall be provided with heavy duty non-metallic cable racks. Cable racks shall be rated for the application, with a minimum loading of 450lbs per rack arm. Cable rack system shall be Heavy Duty type as manufactured by Underground Devices, Incorporated or equal.

D. All precast electric manholes shall be designed to resist floatation with the installed assembly beneath the water table. Shop drawing submittal shall include calculations for anti-floatation design, along with dimensional data. Calculations shall be signed and sealed by an engineer licensed in the state of Florida.

2.04 ELECTRIC HANDHOLES

A. The electric handholes shall be a precast polymer concrete enclosure suitable for use as part of an underground electric raceway system. The enclosure shall meet or exceed the requirements of ANSI/SCTE 77-2010.

B. The enclosure design and test load rating shall be Tier 15.

C. The enclosure shall be the straight side design to allow easy adjustment of box to grade. The box shall be stackable for increased depth.

D. Handhole opening size shall be as required to suit the application, 6” X 8”, minimum.

E. Extra heavy duty covers shall be furnished and installed with Tier 15 enclosures. Covers shall be provided with cover hooks.

F. The electric handholes shall be Style “PG” or “PC” (as required) Quazite boxes as manufactured by Hubbell, Pencell Plastics equivalent, Highline Products equivalent, or equal.

G. All precast electric handholes shall be designed to resist floatation with the installed assembly beneath the water table. Shop drawing submittal shall include calculations for anti-floatation design, along with dimensional data. Calculations shall be signed and sealed by an engineer licensed in the state of Florida.

2.05 ELECTRIC PULLBOXES

A. Concrete pullboxes shall be complete with metal frames and covers of size and location as specified herein and shown on the Drawings.

B. Pullbox frames and covers shall be Neenah R-1640CS, or equal, with Type A anchor ring. Entire pullbox assembly shall be AASHTO H20 heavy duty rated. Covers shall be furnished with drop handles.

C. Concrete pullboxes shall be designed to resist floatation with the installed assembly beneath the water table. Shop drawing submittal shall include calculations for anti-

floatation, along with dimensional data. Calculations shall be signed and sealed by an engineer licensed in the state of Florida.

PART 3 – EXECUTION

3.01 GENERAL

A. The underground duct system, manholes, and handholes shall be installed as specified herein, indicated on the Drawings, and in accordance with manufacturers' instructions.

3.02 DUCT SYSTEM

A. All underground conduit shall be encased in concrete and shall be reinforced. Encasement and reinforcement shall be as indicated in the standard details. Concrete shall be furnished and installed in accordance with Section 03300. Reinforcing steel shall be furnished and installed in accordance with Section 03200. Concrete electrical duct banks shall contain red dye; the red dye shall be mixed into the concrete mix before being poured. Red dye applied to the top of concrete encasement after placement of concrete is not acceptable.

B. Concrete pours shall be complete where practicable. Partial pours in general shall not be permitted. Where a complete pour is impractical, written authorization shall be obtained from the Engineer for the partial pour.

C. Conduit ductbank elevations at the manholes and handholes shall be based on minimum ductbank cover as indicated in the standard details, or deeper to avoid conflicts with other obstacles. Where deviation is necessary to clear unforeseen obstacles, the elevations may be changed after authorization by the Engineer.

D. Slope all conduits continuously away from structures and buildings with a minimum slope of 3" per 100' unless otherwise indicated on the Drawings.

E. The minimum clearance from the top of the concrete encasement and finished grade shall be as indicated in the standard details, except where otherwise accepted in writing by the Engineer or shown on the Drawings.

F. Care shall be exercised during excavation for the duct banks to prevent digging too deep. Backfilling of low spots with earth fill will not be permitted unless thoroughly compacted and acceptable to the Engineer.

G. If a specific ductbank arrangement is shown on the Drawings, the conduits in that ductbank shall be arranged as shown. Where no specific ductbank arrangement is shown on the Drawings, the Contractor shall arrange conduits within each ductbank based on field conditions. Spare conduits shown going from ductbanks into buildings or structures shall be stubbed up in the location(s) as indicated on the Drawings.

H. A minimum of one (1) ground rod, furnished in accordance with Section 16170, shall be driven adjacent to each manhole, handhole, or other concrete box. A No. 4/0 AWG bare copper ground cable shall be connected between this rod and the copper ground strap

using a silicon bronze connector. All ground rods shall be interconnected by means of the No. 4/0 AWG bare copper ground cable located within each duct bank. The ends of these cables shall also be connected to substation and/or building ground buses where the conduits terminate.

I. Care shall be exercised and temporary plugs shall be installed during installation to prevent the entrance of concrete, mortar, or other foreign matter into the conduit system. Conduit spacers shall be utilized to support conduit during the pouring of concrete to prevent movement and misalignment of the conduits. Conduit spacers shall be installed in accordance with manufacturer's instructions unless otherwise noted. Horizontal spacing of conduit spacers along ductbank shall be as indicated on the Standard Details.

J. Large radius elbows shall be used for all 90 degree conduit bends in the duct system. The following shall be the minimum elbow radii:

TRADE SIZE	1"	1 ½"	2"	2 ½"	3"	3 ½"	4"
MIN. RADIUS	12"	24"	24"	24"	36"	36"	48"

K. Prior to pulling cables, the Contractor shall thoroughly clean the inside of each length of conduit by swabbing.

L. After all cables have been installed, all spare and/or unused conduit openings shall be sealed or plugged as specified in Section 16111 - Conduit. A 250 lb. test pull rope shall be provided in the entire length of all spare and/or unused conduits.

M. Where connections to existing underground conduits are indicated, excavate to the maximum depth necessary. After addressing the existing conductors, cut the conduits and remove loose concrete from the conduits before installing new concrete encased ducts. Provide a reinforced concrete collar, poured monolithically with the new duct line, to take the shear at the joint of the duct lines.

N. Construct concrete-encased conduits connecting to underground structures to have a flared section adjacent to the manhole to provide shear strength. Construct underground structures to provide shear strength. Construct underground structures to provide for keying the concrete encasement of the duct line into the wall of the structure. Use vibrators when this portion of the encasement is poured to ensure a seal between the encasement and the wall of the structure.

O. Six (6) inches above all duct banks, the Contractor shall furnish and install a two (2) inch wide red plastic electrical hazard tape. Tapes shall be metallic detectable type and shall have a continuous message in bold black letters: "ELECTRIC LINE BURIED BELOW." Tape shall be Detectable Identoline by Brady, or equal.

P. The Contractor shall perform all earthwork including excavation, backfill, bedding, compaction, shoring and bracing, grading and restoration of surfaces and seeded areas disturbed during the execution of the work.

3.03 ELECTRIC MANHOLES AND PULLBOXES

A. Electric manholes and pullboxes shall be installed to a sufficient depth to accommodate the required grading of ducts as well as maintaining a minimum distance of 14” from the bottom of the lowest duct centerline entrances to finished floor line and/or highest duct centerline entrance to the roof. All manholes and pullboxes shall be built on, or placed over a 6” layer of well-tamped gravel.

B. Duct envelopes and conduit with bell ends shall enter at approximately right angles to the walls, except as may otherwise be shown on the Drawings.

C. All concrete work and fully assembled manholes and pullboxes shall be completely watertight and shall be furnished with sloped floors that pitch towards a sump pit. The outside surfaces shall be coated with an approved asphaltic waterproofing compound (all sides, bottom, and roof). Precast concrete manholes and pullboxes may be installed; however, all requirements of this section and other divisions of the Specifications and the details shown on the Drawings shall apply.

D. Install pulling eye irons imbedded in walls opposite each duct entrance securely fastened to manhole reinforcing rods. All hardware shall be stainless steel. Copper bars shall be provided in the walls for grounding. No. 4/0 AWG bare copper cables shall be connected to these bars and all non-current carrying metal parts shall be grounded to these copper bars.

E. All cables shall be well supported on walls by nonmetallic cable racks. The cable racks shall be heavy-duty type for medium and low voltage power cables and light duty type for control, signal, communications and similar small conductors. All racks shall be rigidly attached to the wall and equipped with adjustable rack arms.

3.04 ELECTRIC HANDHOLES

A. Electric handholes shall be installed to a sufficient depth to accommodate the required grading of ducts as well as maintaining a minimum distance of 9” from the bottom of the lowest duct centerline entrances to finished floor line and/or highest duct centerline entrance to roof. All handholes shall be built on, or placed over a 6” layer of well-tamped gravel.

B. Duct envelopes and conduit with bell ends shall enter at approximately right angles to the walls, except as may otherwise be shown on the Drawings.

C. All fully assembled handholes shall be completely watertight.

D. All individual cables and/or bundles of conductors shall be identified and “dressed” along the wall of the enclosure. Cable racks as specified herein shall be provided if any handhole dimension exceeds 24 inches.

3.05 TESTING

A. All tests shall be performed in accordance with the requirements of the General Conditions and Division 1. The following tests are required:

1. Field tests

   a. Field tests for all completed duct systems shall consist of pulling a swab through each conduit followed by a mandrel equal in size to 85% of the conduit inside diameter.

   b. After testing, all conduits shall be capped after installation of a suitable pull rope. All field tests shall be witnessed by the Engineer.

- END OF SECTION -

SECTION 16123

LOW VOLTAGE WIRE AND CABLE

PART 1 – GENERAL

1.01 THE REQUIREMENT

A. The Contractor shall furnish, install, connect, test, and place in satisfactory operating condition, all low voltage wire and cable indicated on the Drawings and as specified herein and/or required for proper operation. The work of connecting cables to equipment and devices shall be considered a part of this Section. All appurtenances required for the installation of cable and wire systems shall be furnished and installed by the Contractor.

B. The scope of this Section does not include internal wiring factory installed by electrical equipment manufacturers.

C. Reference Section 16000, Basic Electrical Requirements; Section 16111, Conduit; Section 16118, Underground Electrical; and Section 16130, Boxes.

1.02 SUBMITTALS

A. In accordance with the procedures and requirements set forth in the General Conditions and Section 01300, Submittals, the Contractor shall obtain from the wire and cable manufacturer and submit the following:

1. Shop Drawings
2. Reports of Field Tests
3. Wiring Identification Methods

B. Each submittal shall be identified by the applicable specification section.

1.03 SHOP DRAWINGS

A. Each submittal shall be complete in all respects, incorporating all information and data listed herein and all additional information required for evaluation of the proposed material's compliance with the Contract Documents.

B. Partial, incomplete, or illegible Submittals will be returned to the Contractor without review for resubmittal.

C. Shop drawings shall include but not be limited to:

1. Product data sheets.
2. Cable pulling calculations (if required).
3. Wiring identification methods and materials.

1.04 IDENTIFICATION

A. Each cable shall be identified as specified in Part 3, Execution, of this Specification.

1.05 CABLE PULLING CALCULATIONS

A. The Contractor shall submit cable pulling calculations. These calculations, to be 3performed by a currently registered professional engineer in the State of Florida, shall define pulling tension and sidewall loading (sidewall bearing pressure values) for all installations of 600VAC, #1/0 conductors and larger greater than 200 feet in length. Calculations for straight horizontal installations of 600VAC, #1/0 conductors and larger greater than 200 feet are not required.

PART 2 – PRODUCTS

2.01 MANUFACTURERS

A. The wire and cable to be furnished and installed for this project shall be the product of manufacturers who have been in the business of manufacturing wire and cable for a minimum of ten (10) years. Wire and cable shall be designed, constructed and installed in accordance with the best practices of the trade, and shall operate satisfactorily when installed as specified herein and indicated on the Drawings. Only one (1) manufacturer for each wire and cable type shall be permitted.

B. The wire and cable manufacturer shall be ISO 9000 registered.

2.02 POWER WIRE AND CABLE

A. Power cable and wire installed between the output terminals of a VFD and the respective motor shall consist of stranded copper conductor with insulation type XHHW/XHHW-2, rated 90°C and 600V.

B. Power cable and wire for all other loads shall consist of stranded, copper conductor with insulation type THHN, 90°C for dry locations and THWN, 75°C for wet locations.

C. Conductors shall be stranded copper per ASTM-B8 and B-3, and Class B or C stranding contingent on the size unless otherwise specified. Minimum size wire shall be No. 12 AWG.

D. Multi-conductor power cable assemblies shall be UL 1277 Listed, provided with a bonding conductor, and furnished with an overall PVC jacket.

E. Power wire and cable shall be as manufactured by the Okonite Company, the Southwire Company, General Cable, or equal.

2.03 CONTROL CABLE

A. 600 volt control cable shall consist of stranded, copper conductor with insulation type THHN, 90°C for dry locations and THWN, 75°C for wet locations, and 600V.

B. Conductors shall be stranded copper per ASTM B-8 and B-3, and Class B or C stranding contingent on the size unless otherwise specified. Minimum wire size shall be No. 14 AWG.

C. Multi-conductor control cable assemblies shall be UL 1277 Listed, provided with a bonding conductor, and furnished with an overall PVC jacket.

D. Control cable shall be as manufactured by the Okonite Company, the Southwire Company, General Cable, or equal.

2.04 LIGHTING AND RECEPTACLE WIRE

A. The lighting and receptacle branch circuit wire shall consist of solid, copper conductors with insulation type THHN, 90°C for dry locations and THWN, 75°C for wet locations.

B. Conductors shall be solid copper per ASTM- B-3. Minimum size wire shall be No. 12 AWG.

C. Lighting and receptacle wire shall be as manufactured by the Okonite Company, the Southwire Company, General Cable, or equal.

2.05 INSTRUMENTATION CABLE

A. The instrumentation cable for analog signals shall be single, shielded, twisted pairs or triads with 600-volt insulation and shall have a 75°C (minimum) insulation rating.

B. Conductors shall be tin or alloy coated (if available), soft, annealed copper, stranded per ASTM-B8, Class B stranding unless otherwise specified. Minimum size wire shall be No. 16 AWG.

C. The instrumentation cable shall be Okoseal-N Type P-OS for single pair or triad applications and Okoseal-N Type SP-OS for multiple pair or triad applications as manufactured by the Okonite Company, Belden equivalent, Southwire Company equivalent, or equal.

2.06 SHIELDED VFD CABLE

A. Where indicated on the Drawings, shielded VFD cable shall be provided for motors controlled by VFDs. The cable shall be 600V/1000V rated, with stranded tinned copper conductors, shielded, suitable for use with variable frequency drives. Cable shall be suitable for use in wet/dry locations, indoors and outdoors, in cable trays, in conduits, trenches, and in underground ducts and direct burial. The conductor shall be annealed stranded tinned copper per ASTM B3, B8, and B33.

B. The conductor shall be annealed stranded tinned copper per ASTM B3, B8, and B33. The insulation shall be rated for 90 degrees Celsius Wet/Dry operating temperature. The insulation material shall be XLPE with a XHHW-2 listing per UL 44. The insulated conductors shall be cabled together with three (3) symmetrically placed ground wires. The ground wires shall have a minimum circular mil area equivalent to one circuit conductor. Fillers shall be included as necessary to make the cable round.

C. The cabled assembly shall be shielded by applying helically a 5 mil copper tape. The shield shall provide 100% coverage over the assembly. All cables shall have a continuous overall outer jacket of Polyvinyl Chloride (PVC), suitable for 90°C use. The jacket shall be resistant to abrasion, rated for direct burial, sunlight resistant and flame resistant in accordance with UL 1277. Cable shall be as manufactured by Belden Wire and Cable, Okonite, General Cable, or AmerCable Inc.

2.07 CONDUCTOR IDENTIFICATION

A. Conductors shall be identified using a color-coding method. Color coding for individual power, control, lighting, and receptacle conductors shall be as follows:

1. 480/277V AC Power

   Phase A - BROWN
   Phase B - ORANGE
   Phase C - YELLOW
   Neutral – GREY

2. 120/208V or 120/240V AC Power

   Phase A - BLACK
   Phase B - RED
   Phase C - BLUE
   Neutral - WHITE

3. DC Power

   Positive Lead - RED
   Negative Lead - BLACK

4. DC Control

   All wiring - BLUE

5. 120VAC Control

   120 VAC control wire shall be RED except for a wire entering a motor control center compartment or control panel which is an interlock. This interlock conductor shall be color coded YELLOW.

6. 24VAC Control

   All wiring - ORANGE

7. Equipment Grounding Conductor

   All wiring - GREEN

B. Individual conductors No. 2 AWG and smaller shall have factory color coded insulation. It is acceptable for individual conductors larger than No.2 AWG to be provided with factory color coded insulation as well, but it is not required. Individual conductors larger than No.2 AWG that are not provided with factory color coded insulation shall be identified by the use of colored tape in accordance with the requirements listed in Part 3 herein. Insulation colors and tape colors shall be in accordance with the color-coding requirements listed above.

C. Conductors that are a part of multi-conductor control cable assemblies shall have black insulation. The conductor number shall be printed on each conductor's insulation in accordance with ICEA S-58-679, Method 4. Each conductor within the cable assembly shall also be identified with a heat shrink tag with color coded background in accordance with the requirements listed in Part 3 herein. Background color shall be in accordance with the color-coding requirements listed above.

D. Conductors that are a part of multi-conductor power cable assemblies shall have black insulation. The conductor number shall be printed on each conductor's insulation in accordance with ICEA S-58-679, Method 4. Each conductor No.2 AWG and smaller within the cable assembly shall also be identified with a heat shrink tag with color coded background. Each conductor larger than No.2 AWG within the cable assembly shall also be identified by the use of colored tape. Heat shrink tags and colored tape shall be in accordance with the requirements listed in Part 3 herein. Tape color and heat shrink tag background color shall be in accordance with the color-coding requirements listed above.

2.08 CABLE PULLING LUBRICANTS

A. Cable pulling lubricants shall be non-hardening type and approved for use on the type of cable installed. Lubricant shall be Yellow #77 Plus by Ideal, Cable Gel by Greenlee, Poly-Gel by Gardner Bender, or equal.

PART 3 – EXECUTION

3.01 POWER, CONTROL, AND LIGHTING/RECEPTACLE WIRE AND CABLE INSTALLATION

A. The wire and cable shall be installed as specified herein and indicated on the Drawings.

B. The cables shall be terminated in accordance with the cable and/or termination product manufacturer's instructions for the particular type of cable.

C. To minimize oxidation and corrosion, wire and cable shall be terminated using an oxide-inhibiting joint compound recommended for "copper-to-copper" connections. The compound shall be Penetrox E as manufactured by Burndy Electrical, or equal.

D. Splices shall not be allowed in the underground manhole and handhole systems. If splices are required, the Contractor shall obtain approval in writing from the Engineer prior to splicing. Splicing materials shall be barrel type butt splice connectors and heat shrink tubing as manufactured by 3M, Ideal, or equal. No splicing of instrumentation cable is

allowed. The use of screw-on wire connectors (wire nuts) shall only be permitted for lighting and receptacle circuits.

E. Wire and Cable Sizes

1. The sizes of wire and cable shall be as indicated on the Drawings, or if not shown, as approved by the Engineer. If required due to field routing, the size of conductors and respective conduit shall be increased so that the voltage drop measured from source to load does not exceed 2-1/2%.

F. Additional Conductor Identification

1. In addition to the color-coding identification requirements specified in Part 2 herein, individual conductors shall be provided with heat shrinkable identification tags. Identification tags for individual conductors shall have a white background where the conductor insulation is colored. Identification tags for individual conductors shall have a colored background where the conductor insulation is black. Background color shall match that of the taping provided on the individual black conductors.

2. Multi-conductor cables shall be provided with heat shrinkable identification tags in accordance with Part 2 herein.

3. All wiring shall be identified at <u>each</u> point of termination. This includes but is not limited to identification at the source, load, and in any intermediate junction boxes where a termination is made. The Contractor shall meet with the City and Engineer to come to an agreement regarding a wire identification system prior to installation of any wiring. Wire numbers shall not be duplicated.

4. Wire identification shall be by means of a heat shrinkable sleeve with appropriately colored background and black text. Wire sizes #14 AWG through #10 AWG shall have a minimum text size of 7 points. Wire sizes #8 AWG and larger shall have a minimum text size of 10 points. Sleeves shall be of appropriate length to fit the required text. The use of handwritten text for wire identification shall not be permitted.

5. Sleeves shall be suitable for the size of wire on which they are installed. Sleeves <u>shall not be heat-shrunk</u> onto control cables. Tags shall remain loose on cable to promote easier identification. For all other applications, sleeves shall be tightly affixed to the wire and shall not move. Sleeves shall be heat shrunk onto wiring with a heat gun approved for the application. Sleeves shall not be heated by any means which employs the use of an open flame. The Contractor shall take special care to ensure that the wiring insulation is not damaged during the heating process.

6. Sleeves shall be installed prior to the completion of the wiring terminations and shall be oriented so that they can be easily read.

7. Sleeves shall be polyolefin as manufactured by Brady, Seton, Panduit, or equal.

8. Wire identification in manholes, handholes, pull boxes, and other accessible components in the raceway system where the wiring is continuous (no terminations

are made) shall be accomplished by means of a tag installed around the bundled group of individual conductors or around the outer conductor jacket of a multi-conductor cable. Identification shall utilize a FROM-TO system. Each group of conductors shall consist of all of the individual conductors in a single conduit or duct. The tag shall have text that identifies the bundle in accordance with the 'FROM' and 'TO' column for that particular conduit number in the conduit and wire schedule. Minimum text size shall be 10 point. The tag shall be affixed to the wire bundle by the use of nylon wire ties, and shall be made of polyethylene as manufactured by Brady, Seton, Panduit, or equal.

9. Where colored tape is used to identify cables, it shall be wrapped around the cable with a 25% overlap and shall cover at least 2 inches of the cable.

H. Wiring Supplies

1. Only electrical wiring supplies manufactured under high standards of production and meeting the approval of the Engineer shall be used.

2. Rubber insulating tape shall be in accordance with ASTM Des. D119. Friction tape shall be in accordance with ASTM Des. D69.

I. Training of Cable

1. The Contractor shall furnish all labor and material required to train cables around cable vaults within buildings and in manholes and handholes in the outdoor underground duct system. Sufficient length of cable shall be provided in each handhole, manhole, and vault so that the cable can be trained and racked in an approved manner. In training or racking, the radius of bend of any cable shall be not less than the manufacturer's recommendation. The training shall be done in such a manner as to minimize chaffing. Reference Section 16118.

2. Instrumentation cable shall be racked separate from other AC and DC wiring to maintain the required separation as follows:

a. 18 inches for 480/277VAC wiring

b. 12 inches for 208/120VAC wiring

c. 6 inches for 24VDC wiring

J. Conductor Terminations

1. Where wires are terminated at equipment which requires lugs, connections shall be made by solderless mechanical lug, crimp type ferrule, or irreversible compression type lugs. Reference individual equipment specification sections as applicable for additional termination requirements.

2. Where enclosure sizes and sizes of terminals at limit switches, solenoid valves, float switches, pressure switches, temperature switches, and other devices make terminations impractical due to the size of the field wiring, the Contractor shall

terminate field wiring in an adjacent junction per the requirements of Section 16130, Boxes, complete with terminal strips. Contractor shall install the smaller wiring from the device to the junction box in a conduit, using the terminal strip as the means for joining the two different wire sizes. Splicing of wires in lieu of using terminal strips is not acceptable.

3. All spare conductors shall be terminated on terminal blocks mounted within equipment or junction boxes. Unless otherwise noted, coiling up of spare conductors within enclosure is not acceptable.

K. Pulling Temperature

1. Cable shall not be flexed or pulled when the temperature of the jacket is such that damage will occur due to low temperature embrittlement. When cable will be pulled with an ambient temperature of 40°F or less within a three (3) day period prior to pulling, the cable reels shall be stored three (3) days prior to pulling in a protected storage area with an ambient temperature of 55°F or more. Cable pulling shall be completed during the workday for which the cable is removed from the protected storage. Any remaining cable reels shall be returned to storage at the completion of the workday.

3.02 INSTRUMENTATION CABLE INSTALLATION

A. The Contractor shall install all cable or conductors used for instrumentation wiring (4-20 mA DC, etc.) in conduit as specified in Section 16111 - Conduit. Only instrumentation cable as specified herein shall exclusively occupy these conduits. No other wiring for AC or discrete DC circuits shall be installed in these conduits.

B. All shielding shall be continuous and shall be **grounded at one point only**.

C. Where instrumentation cables are installed in panels, manholes, handholes, and other locations, the Contractor shall arrange wiring to provide maximum clearance between these cables and other conductors. Instrumentation cables shall not be installed in same bundle with conductors of other circuits.

D. Special instrument cable shall be as specified or recommended by the manufacturer of the equipment or instruments requiring such wiring. Installation, storage, and terminations shall be per manufacturer's recommendations.

3.03 SHIELDED VFD CABLE INSTALLATION

A. The Contractor shall install all cable or conductors used for shielded VFD cable in conduit as specified in Section 16111 - Conduit. Only shielded VFD cable as specified herein shall exclusively occupy these conduits. No other wiring shall be installed in these conduits.

3.04 FIBER OPTIC CABLE INSTALLATION

A. The Electrical Subcontractor shall install the fiber optic cable furnished by the Instrumentation and Control Subcontractor. The cable shall be installed in its respective

raceway system(s) as specified herein, indicated on the Drawings, and in accordance with the cable manufacturer's instructions. Reference Division 17 for additional information regarding the fiber optic cable.

3.05 TESTING

A. All testing shall be performed in accordance with the requirements of the General Conditions and Division 1. The following tests are required:

1. Shop Test

a. Cable and wiring shall be tested in accordance with the applicable ICEA Standards. Wire and cable shall be physically and electrically tested in accordance with the manufacturer's standards.

2. Field Tests

a. After installation, all wires and cables shall be tested for continuity. Testing for continuity shall be "test light" or "buzzer" style.

b. After installation, some wires and cables shall be tested for insulation levels. Insulation resistance between conductors of the same circuit and between conductor and ground shall be tested. Testing for insulation levels shall be as follows:

(1) For #8 AWG and larger 600V power and control cable, apply 1,000 VDC from a Megaohmeter for one (1) minute for <u>all</u> 600V wires and cables installed in lighting, control, power, indication, alarm and motor feeder circuits. Resistance shall be no less than 100 Megaohms. Insulation testing is not required for power and control cables smaller than #8 AWG.

(2) 600V instrumentation signal cable shall be tested from conductor to conductor, conductor to shield, and conductor to ground using a Simpson No. 260 volt-ohmmeter or approved equal. The resistance value shall be 200 Megaohms or greater.

B. Wires and cables shall be tested before being connected to motors, devices or terminal blocks.

C. Fiber optic cables shall be tested for continuity on the reel prior to installation, and retested after the installation is complete

D. If tests reveal defects or deficiencies, the Contractor shall make the necessary repairs or shall replace the cable as directed by the Engineer, without additional cost to the City.

E. All tests shall be made by and at the expense of the Contractor who shall supply all testing equipment. Test reports shall be submitted to the Engineer.

(EXHIBIT A)
TEST DATA - MEGOHMS
TEST NO. ____

Date:			Company:				
Time:			Location:				
Circuit:	Circuit Length:	Aerial:	Duct:	Buried:	No. of Conduc-tors	Size:	AMG MCM Shld:
Insulation Material:			Insulation Thickness:		Voltage Rating:		Age:
Type: _____Pothead _____Terminal					Location: Indoors_____ Outdoors_____		
Number and Type of Joints:							
Recent Operating History:							
Manufacturer:							
State if Potheads or Terminals were grounded during test:							
List associated equipment included in test:							
Miscellaneous Information:							

(EXHIBIT A)
TEST DATA - MEGOHMS
TEST NO. ____

Part Tested:Test Made:_____
Hours/Days:_____
After Shutdown:_____

Grounding Time:Dry Bulb Temperature:_____
Wet Bulb Temperature:_____

Test Voltage:

Equipment Temperature: _____
How Obtained: _____
Relative Humidity: _____
Absolute Humidity: _____
Dew Point: _____

Megohmmeter: Serial Number: _____ Range: _____
Voltage: _____ Calibration Date_____

Test Connections	To Line To Earth To Ground	To Line To Earth To Ground	To Line To Earth To Ground	Test Connections	To Line To Earth To Ground	To Line To Earth To Ground	To Line To Earth To Ground
½ Minute				5 Minutes			
¾ Minute				6 Minutes			
3/4 Minute				7 Minutes			
1 Minute				8 Minutes			
2 Minutes				9 Minutes			
3 Minutes				10 Minutes			
4 Minutes				10/1 Minutes			
				Ratio			

Remarks:

- END OF SECTION -

SECTION 16130

BOXES

PART 1 – GENERAL

1.01 THE REQUIREMENT

A. The scope of work under this Section includes furnishing and installing all pull boxes, junction boxes, and outlet boxes.

B. Requirements for other boxes and enclosures are not included in this Section. Reference each specific Division 16 equipment Section for requirements related to that equipment's respective enclosure.

C. Reference Section 16000, Basic Electrical Requirements, and Section 161111, Conduit.

1.02 CODES AND STANDARDS

A. Boxes shall be designed, manufactured, and/or listed to the following standards as applicable:

1. UL 514A - Metallic Outlet Boxes
2. UL 514C - Standard for Non-metallic Outlet Boxes, Flush Device Boxes, and Covers
3. UL 50 – Enclosures for Electrical Equipment, Non-environmental Considerations
4. UL 50E - Enclosures for Electrical Equipment, Environmental Considerations
5. NEMA 250 – Enclosures for Electrical Equipment

1.03 SUBMITTALS

A. In accordance with the procedures and requirements set forth in the General Conditions and Section 01300, Submittals, the Contractor shall obtain from the equipment manufacturer(s) and submit the following:

1. Shop Drawings

B. Each submittal shall be identified by the applicable specification section.

1.04 SHOP DRAWINGS

A. Each submittal shall be complete in all respects, incorporating all information and data listed herein and all additional information required for evaluation of the proposed equipment's compliance with the Contract Documents.

B. Partial, incomplete or illegible Submittals will be returned to the Contractor without review for resubmittal.

C. Shop drawings shall include but not be limited to:

1. Product data sheets for boxes, terminal strips, and all accessories

1.05 OPERATION AND MAINTENANCE MANUALS

A. The Contractor shall submit operation and maintenance manuals in accordance with the procedures and requirements set forth in the General Conditions and Division 1.

B. As-built drawings showing dimensions, internal box layout, terminal strip information, and terminal strip identification information shall be provided for all junction boxes. As-built drawings are not required for pull boxes or outlet boxes.

1.06 IDENTIFICATION

A. Each pull and junction box shall be identified with the box name as indicated on the Contract Drawings (e.g. PB-1) or as directed by the Engineer. A nameplate shall be securely affixed in a conspicuous place on each box. Nameplates shall be as specified in Section 16195, Electrical – Identification.

PART 2 – PRODUCTS

2.01 MANUFACTURERS

A. The equipment covered by this Specification is intended to be standard equipment of proven performance as manufactured by reputable concerns. Equipment shall be designed, constructed, and installed in accordance with the best practices of the trade, and shall operate satisfactorily when installed as shown on the Drawings.

2.02 PULL AND JUNCTION BOXES

A. General

1. All pull and junction boxes shall be UL listed and labeled.

2. Pull and junction boxes shall not be provided with eccentric or concentric knockouts.

3. Pull and junction boxes mounted embedded in concrete shall be UL listed for embedment.

4. Where metallic boxes are used they shall be of all welded construction. Tack welded boxes are not acceptable.

B. Pull Boxes

1. All pull boxes shall be provided with a matching gasketed cover. For covers with dimensions of 24 inches by 24 inches or less, the cover shall be held in place by

machine screws, unless otherwise indicated. Other screw types are not acceptable. For covers with dimensions greater than 24 inches by 24 inches, the cover shall be hinged and held in place by screw-operated clamp mechanisms. Hinge pins shall be removable. Clamp mechanism material of construction shall match that of the associated box.

2. Pull boxes shall not have any wire terminations inside, other than those for grounding/bonding. A ground bar shall be provided with the necessary number of screw type terminals. Twenty (20) percent of the total amount of terminals otherwise required for the pull box (minimum of two) shall be provided as spare terminations. Boxes requiring any other wire terminations shall be furnished and installed in accordance with the requirements for junction boxes herein.

3. Pull boxes shall be 6 inches wide by 6 inches tall by 4 inches deep, minimum. For applications requiring larger boxes, the box shall be sized in accordance with the fill requirements and dimensional requirements of the NEC.

4. Barriers shall be provided in pull boxes to isolate conductors of different voltages, types, and functions. Barrier material of construction shall match that of the box. Isolation shall be provided between the following groups:

   a. Power wiring

   b. AC control wiring

   c. DC control wiring

   d. Instrumentation wiring

C. Junction Boxes

1. Junction boxes used for lighting and receptacle circuits only shall be provided with a matching gasketed cover held in place by machine screws. Other screw types are not acceptable.

2. Junction boxes for all uses other than lighting and receptacle circuits shall be provided with a hinged, gasketed cover. Hinge pins shall be removable. Cover shall be held in place by screw-operated clamp mechanisms. Clamp mechanism material of construction shall match that of the associated box.

3. Barriers shall be provided in junction boxes to isolate conductors and terminal blocks of different voltages, types, and functions. Barrier material of construction shall match that of the box. Isolation shall be provided between the following groups:

   a. Power wiring

   b. AC control wiring

   c. DC control wiring

   d. Instrumentation wiring

4. Junction boxes used for lighting and receptacle circuits only shall be allowed to have screw-on (wire nut) type connectors for wire terminations/junctions.

5. Junction boxes for all uses other than lighting and receptacle circuits shall be provided with terminal strips, consisting the necessary number of screw type terminals. Current carrying parts of the terminal blocks shall be of ample capacity to carry the full load current of the circuits connected, with a 10A minimum capacity. Terminal strips shall be rated for the voltage of the circuits connected. A separate ground bar shall be provided with the necessary number of screw type terminals. Twenty (20) percent of the total amount of terminals otherwise required for the junction box (minimum of two) shall be provided as spare terminations. When barriers are provided within the box, separate terminal strips shall be provided in each barrier area. Terminals shall be lettered and/or numbered to conform to the wiring labeling scheme in place on the project.

6. Junction boxes shall be 6 inches wide by 6 inches tall by 4 inches deep, minimum. For applications requiring larger boxes, the box shall be sized in accordance with the fill requirements and dimensional requirements of the NEC. Terminal blocks (including spare terminals) shall be considered when sizing the junction box.

D. Enclosure Types and Materials

1. In non-hazardous locations, pull and junction boxes shall be furnished with the following enclosure type and material of construction, dependent upon the designation of the area in which they are to be installed. Area designations are indicated on the Drawings.

AREA DESIGNATION	**ENCLOSURE TYPE AND MATERIAL**
Indoor Dry Non-Process Area	NEMA 1, Painted Steel
All Outdoor Areas	NEMA 4X, Type 316 Stainless Steel

2.03 OUTLET BOXES

A. General

1. Outlet boxes shall be provided with a trim appropriate for the wiring device installed inside. Reference Section 16141, Wiring Devices, for outlet box trim requirements. An appropriate outlet box trim is required to achieve the NEMA rating of the outlet boxes as specified herein.

B. Surface Mount Outlet Boxes

1. Outlet boxes shall be the deep type, no less than 2.5 inches deep.

2. Outlet boxes shall be provided in single or multi-gang configuration as required, sized in accordance with the requirements of the NEC.

3. In non-hazardous locations, outlet boxes shall be furnished with the following enclosure type and material of construction, dependent upon the designation of the area in which they are to be installed. Area designations are indicated on the Drawings.

AREA DESIGNATION	ENCLOSURE TYPE AND MATERIAL
Indoor Dry Non-Process Area	NEMA 1, Cast Aluminum
All Outdoor Areas	NEMA 4X, Cast Aluminum

4. Outlet boxes shall be provided with integral threaded conduit hubs mounted external to the box. Boxes with threaded conduit hubs mounted internal to the box or as a part of the box wall are not acceptable.

C. Flush Mount Outlet Boxes

1. Outlet boxes shall be no less than 2-1/8 inches deep, and 4-11/16 inches square. Boxes shall be UL listed and labeled. Pre-punched single diameter conduit knockouts are acceptable; however, concentric and eccentric knockouts are not acceptable.

2. Outlet boxes mounted flush in CMU walls shall be made of galvanized, tack welded steel, and suitable for installation in masonry walls. Sectional type boxes are not acceptable for this application.

3. Outlet boxes mounted flush in gypsum walls shall be made of galvanized pressed steel. Tack welded boxes are not acceptable for this application. Sectional type boxes are not acceptable for this application.

4. Outlet boxes mounted cast into concrete shall be concrete tight and shall be made of galvanized steel or PVC.

PART 3 – EXECUTION

3.01 INSTALLATION

A. Pull and Junction Boxes

1. Pull boxes and junction boxes shall be solidly attached to structural members prior to installation of conduit and set true and plumb. Boxes shall not be supported by their associated conduits.

2. Wooden plugs are not permitted for securing boxes to concrete. Appropriately rated anchors specifically suited for use in concrete shall be used.

3. Box penetrations for conduits shall be made with a punch tool, and penetrations shall be of the size required for the conduit entry and/or hub. Oversized penetrations in boxes are not acceptable.

4. Watertight conduit hubs shall be provided for boxes where a NEMA 4X enclosure rating is specified. Reference Section 16111, Conduit, for conduit hub requirements.

5. Pull and junction boxes may be installed flush mounted in gypsum, concrete or CMU walls where appropriate provided that covers are easily removed or opened.

6. Pull and junction boxes shall be provided in the enclosure type and material of construction required for the area in which it is installed. Reference the requirements in Part 2 herein, and the area designations indicated on the Drawings.

B. Outlet Boxes

1. Outlet boxes shall be solidly attached to structural members prior to installation of conduit and set true and plumb. Boxes shall not be supported by their associated conduits.

2. Wooden plugs are not permitted for securing boxes to concrete. Appropriately rated anchors specifically suited for use in concrete shall be used.

3. Flush mounted outlet boxes shall be arranged and located so that tile and grout lines fit closely around the boxes, and so placed that the cover or device plate shall fit flush to the finished wall surface.

4. Outlet boxes shall be flush mounted in finished areas and other areas where practical.

5. For the below-named items, mounting heights from finished floor, or finished grade to top is applicable, depending on the type of wiring device to be installed in the outlet box. Mounting heights for outlet boxes shall be as follows, unless otherwise specified herein, indicated on the Drawings, or required by the Americans with Disability Act (ADA):

   a. Light switches and wall mounted occupancy sensors, 48 inches

   b. Receptacles in indoor dry process/non-process areas, 16 inches

   c. Receptacles in indoor wet process areas and all indoor chemical storage/transfer areas, 48 inches

   d. Receptacles in outdoor locations, 24 inches

6. Outlet boxes shall be provided in the material of construction required for the area in which it is installed. Reference the requirements in Part 2 herein, and the area designations indicated on the Drawings.

- END OF SECTION -

SECTION 16141

WIRING DEVICES

PART 1 – GENERAL

1.01 THE REQUIREMENT

A. The Contractor shall furnish and install all switches, occupancy sensors, and receptacles of the type and at the locations as shown on the Drawings.

B. All switches and receptacles shall be furnished and installed in outlet boxes. Reference Section 16130, Boxes, for outlet box requirements.

C. Reference Section 16000, Basic Electrical Requirements, and Section 16123, Low Voltage Wire and Cable.

1.02 CODES AND STANDARDS

A. Wiring devices shall be designed, manufactured, and/or listed to the following standards as applicable:

1. UL 20 – General Use Snap Switches

2. UL 498 – Standard for Attachment Plugs and Receptacles

3. UL 943 – Ground Fault Circuit Interrupters

1.03 SUBMITTALS

A. In accordance with the procedures and requirements set forth in the General Conditions and Section 01300, Submittals, the Contractor shall obtain from the equipment manufacturer and submit shop drawings. Each submittal shall be identified by the applicable specification section.

1.04 SHOP DRAWINGS

A. Each submittal shall be complete in all respects, incorporating all information and data listed herein and all additional information required for evaluation of the proposed equipment's compliance with the Contract Documents.

B. Partial, incomplete, or illegible submittals will be returned to the Contractor without review for resubmittal.

C. Shop drawings shall include, but not be limited to:

1. Product data sheets.

1.05 SPARE PARTS

A. The Contractor shall furnish 10% (minimum of 1) spare of each receptacle, switch, and plug furnished and installed for this project.

B. Spare parts lists, included with the shop drawing submittal, shall indicate specific sizes, quantities, and part numbers of the items to be furnished. Terms such as "1 lot of packing material" are not acceptable.

C. Parts shall be completely identified with a numerical system to facilitate parts inventory control and stocking. Each part shall be properly identified by a separate number. Those parts which are identical for more than one size shall have the same parts number.

1.06 IDENTIFICATION

A. Each switch and receptacle shall be identified with the equipment item number, manufacturer's name or trademark, and such other information as the manufacturer may consider necessary, or as specified, for complete identification.

PART 2 – PRODUCTS

2.01 MANUFACTURERS

A. The equipment covered by these Specifications is intended to be standard equipment of proven performance as manufactured by reputable concerns. Equipment shall be designed, constructed and installed in accordance with the best practices of the trade, and shall operate satisfactorily when installed as shown on the Drawings.

B. The Contractor shall use the products of a single manufacturer for each type of wiring device.

C. The Contractor shall use the products of a single manufacturer for all device plates. Plate variations are allowed for the following devices:

1. Where the selected plate manufacturer does not manufacture a suitable finish plate.

2. For heavy-duty receptacles rated at more than 30A.

3. Where non-standard plates are required, specified, or shown.

D. The Contractor shall furnish and install all wiring devices and device plates.

E. In non-hazardous areas, provide specification grade devices manufactured by Appleton, Crouse-Hinds, Leviton, Hubbell, Pass & Seymour, or Engineer approved equal.

2.02 WIRING DEVICES

A. Wall switches for non-hazardous areas shall be rated for the current required to suit the application, but not less than 20A. Double pole, three-way, and four-way switches shall

be provided where indicated on the Drawings, and as required. Switches shall be rated for 120-277VAC and shall be UL 20 Listed.

B. Convenience receptacles for non-hazardous areas shall be rated for 20A at 125VAC. Convenience receptacles shall be UL 498 Listed. Tamper resistant receptacles are not acceptable.

C. Special purpose receptacles (welders, lab equipment, etc.) shall be provided with the proper NEMA configuration and ampacity as indicated on the Drawings. The coordinating plug for each special purpose receptacle shall be provided with the equipment which it is serving.

D. Ground fault circuit interrupter receptacles shall be rated for 20A at 125VAC. Ground fault circuit interrupter receptacles shall be UL 943 Listed. Tamper resistant receptacles are not acceptable.

E. All wiring devices shall be approved for use with stranded conductors, if stranded conductors are to be used with the device. Reference Section 16123, Low Voltage Wire and Cable for conductor requirements

2.03 DEVICE PLATES

A. Device plates for indoor flush-mounted receptacles and switches shall be made of Type 304 stainless steel, not less than 0.032 of an inch thick, with beveled edges and milled on the rear so as to lie flat against the wall. Devices plates shall be provided with a gasket.

B. Device plates for outdoor installations, indoor wet process areas, and chemical storage/transfer areas shall be Appleton Type FSK, Crouse-Hinds #DS185, or equal for wall switches. Device plates for receptacles shall be “in-use” style. “In-use” weatherproof covers shall be rugged, minimum 3 ¼” depth, die-cast aluminum as manufactured by Thomas & Betts "Red Dot," Intermatic International, Inc., or equal.

C. Device plates for indoor dry process and non-process areas with surface mounted boxes shall be Crouse-Hinds DS32, or equal for switches, and Crouse-Hinds DS23 or equal for receptacles.

2.04 PLUGS

A. The Contractor shall furnish suitable plugs with equipment furnished under the respective specification Section. Plugs shall be black rubber or plastic. For waterproof receptacles, the plugs shall be similar in construction to the receptacles and shall be encased in corrosion resistant yellow housing provided with clamping nuts and stuffing gland cable outlets.

2.05 PROCESS INSTRUMENTS

A. The Contractor shall furnish and install a local disconnect switch at each process instrument (e.g., level transmitter, flow transmitter, analytical instrument etc.,) to disconnect the 120VAC power supply to the instrument. The device shall be a NSSC

series manual motor starting switch without overload protection as manufactured by Crouse-Hinds, Appleton equivalent, or equal.

2.06 OCCUPANCY SENSORS

A. Occupancy sensors shall be wall or ceiling mount as indicated on the Drawings. Sensors also shall be as follows:

TYPE	DESCRIPTION	MODEL
A	Ceiling mount, passive infrared sensing, 360 degree viewing angle, adjustable time delay off, LED activity indicator, conformal coating for low temperature/high humidity, 120VAC line powered, equipped with test mode	CMR 9 by Sensorswitch, or approved equal
B	Ceiling mount, passive infrared sensing, 360-degree extended range viewing angle, adjustable time delay off, LED activity indicator, conformal coating for low temperature/high humidity, 120VAC line powered, equipped with test mode.	CMR 10 by Sensorswitch, or approved equal
C	Wall mount, passive infrared sensing and ultrasonic sensing, 120-degree large area viewing angle, adjustable time delay off, LED activity indicator, conformal coating for low temperature/high humidity, 120VAC line powered, equipped with test mode	LWSH PDT series by Sensorswitch, or approved equal
D	Wall mount, passive infrared sensing, 120-degree large area viewing angle, adjustable time delay off, LED activity indicator, conformal coating for low temperature/high humidity, 120VAC line powered, equipped with test mode.	LWSH series by Sensorswitch, or approved equal
E	Ceiling mount, passive infrared sensing and ultrasonic sensing, 360 degree viewing angle, adjustable time delay off, LED activity indicator, conformal coating for low temperature/high humidity, 120VAC line powered, equipped with test mode	CMR 9 PDT by Sensorswitch, or approved equal

B. Sensors shall be provided with all mounting hardware, control units, and adaptors as required for a complete and operable lighting control system.

PART 3 – EXECUTION

3.01 INSTALLATION

A. Where more than one (1) switch occurs at one (1) location, gang plates shall be used.

B. All device plates shall be set true and plumb, and shall fit tightly against the finished wall surfaces and outlet boxes.

C. Wiring device box (outlet box) mounting heights shall be as specified in Section 16130, Boxes.

D. When indicated height would place any of the equipment at an unsuitable location such as at a molding or break in wall finish, the Contractor shall bring it to the attention of the Engineer for a decision.

E. Receptacles installed in toilet, locker, and bathrooms, and within 6 feet of a sink, shall be of ground fault interrupter type. Ground fault circuit interrupter receptacles shall also be furnished and installed in additional locations where indicated on the Drawings, and as required by the NEC.

F. All receptacles shall have a self-adhesive label installed on the top at the respective device plate that indicates which panel and which circuit number the receptacle is supplied from. Labels shall have a white background and black lettering in 14-point font.

F. The turn-off time delay for each occupancy sensor shall initially be set to 10 minutes. Contractor shall be responsible for the proper commissioning and testing of each occupancy sensor to ensure that it operates to the Owner and Engineer's satisfaction.

3.02 CIRCUITING

A. Convenience receptacles shall be grouped on circuits separate from the lighting circuits. A maximum of eight (8) convenience receptacles are permitted per 20A, 120V circuit, unless otherwise indicated on the Drawings.

- END OF SECTION -

SECTION 16170

GROUNDING AND BONDING

PART 1 – GENERAL

1.01 THE REQUIREMENT

A. The Contractor shall furnish and install grounding systems complete in accordance with the minimum requirements established by Article 250 of the NEC. Article 250 of the NEC shall be considered a minimum requirement for compliance with this Specification.

B. Grounding of all instrumentation and control systems shall be furnished and installed in accordance with the manufacturer/system requirements and IEEE 1100-92, Powering and Grounding of Sensitive Electronic Equipment. Conflicts shall be promptly brought to the attention of the Engineer.

C. In addition to the NEC requirements, building structural steel columns shall be permanently and effectively grounded:

D. Reference Section 16000, Basic Electrical Requirements

1.02 CODES AND STANDARDS

A. Equipment and materials covered under this Section shall be designed, manufactured, and/or listed to the following standards as applicable:

1. UL 467 – Grounding and Bonding Equipment

2. IEEE 81 – Guide for Measuring Earth Resistivity, Ground Impedance, and Earth Surface Potentials of a Ground System.

1.03 SUBMITTALS

A. In accordance with the procedures and requirements set forth in the General Conditions and Section 01300, Submittals, the Contractor shall obtain from the equipment manufacturer and submit the following:

1. Shop Drawings

2. Reports of certified field tests.

B. Each submittal shall be identified by the applicable specification section.

1.04 SHOP DRAWINGS

A. Each submittal shall be complete in all respects, incorporating all information and data listed herein and all additional information required for evaluation of the proposed equipment's compliance with the Contract Documents.

B. Partial, incomplete, or illegible submittals will be returned to the Contractor without review for resubmittal.

C. Shop drawings shall include but not be limited to:

1. Product data sheets.

2. Drawings and written description of how the Contractor intends to furnish and install the grounding system.

PART 2 – PRODUCTS

2.01 MANUFACTURERS

A. The equipment covered by these specifications shall be standard equipment of proven performance as manufactured by reputable concerns. Equipment shall be designed, constructed, and installed in accordance with the best practices of the trade, and shall operate satisfactorily when installed as shown on the Drawings.

2.02 GROUND RODS AND GRID

A. Except where specifically indicated otherwise on the drawings, ground rods shall be copper-bonded steel type rods. Copper-bonded steel ground round rods shall be rolled to a commercially round shape from a welded copper-clad steel manufactured by the molten-welding process or by the electro-formed process (molecularly bonded). They shall have an ultimate tensile strength of 75,000 pounds per square inch (psi) and an elastic limit of 49,000 psi. The rods shall be not less than 3/4 inch in diameter by 10 feet in length; and the proportion of copper shall be uniform throughout the length of the rod. The copper shall have a minimum wall thickness of 0.010 inch at any point on the rod. Ground rods shall be UL 467 listed. The ground rods shall be manufactured by Erico Products, Blackburn, or equal.

B. Except where specifically indicated otherwise, all exposed non current-carrying metallic parts of electrical equipment, metallic raceway systems, grounding conductors in nonmetallic raceways and neutral conductors of wiring systems shall be grounded.

C. The ground connection shall be made at the main service equipment and shall be extended to the ground grid surrounding the structure. The ground grid shall also be connected to the point of entrance of the metallic water service. Connection to the water pipe shall be made by a suitable ground clamp or lug connection to a plugged tee. If flanged pipes are encountered, connection shall be made with the lug bolted to the street side of the flanged connection.

D. Where ground fault protection is employed, care shall be taken so that the connection of the ground and neutral does not interfere with the correct operation of the ground fault protection system.

2.03 FITTINGS

A. Grounding connections to equipment shall be bolted. Cable end connections shall be

made by hydraulic crimp or exothermically welded. Split bolt type connectors are not acceptable. Fittings shall be UL 467 listed.

2.04 EQUIPMENT GROUNDING CONDUCTORS

A. An insulated equipment grounding conductor, which shall be separate from the electrical system neutral conductor, shall be furnished and installed for all circuits. Insulation shall be of the same type as the underground conductors in the raceway and shall be green in color. Equipment grounding conductors shall be furnished and installed in all conduits. Use of conduits as the NEC required equipment grounding conductor is not acceptable.

2.05 EQUIPMENT GROUNDS

A. Equipment grounds shall be solid and continuous from a connection at earth to all distribution panelboards. Ground connections at panelboards, outlets, equipment, and apparatus shall be made in an approved and permanent manner.

2.06 EXOTHERMIC WELDS

A. All exothermic welding shall be completed per welding kit manufacturer's instructions. Exothermic welds shall be CadWeld by Erico or ThermoWeld.

PART 3 – EXECUTION

3.01 INSTALLATION

A. Metal surfaces where grounding connections are to be made shall be clean and dry. Steel surfaces shall be ground or filed to remove all scale, rust, grease, and dirt. Copper and galvanized steel shall be cleaned with emery cloth to remove oxide before making connections.

B. Ground Grid

1. A main ground grid shall be provided for each structure and interconnecting structure grids consisting of driven ground rods as shown on the Drawings. The ground rods shall be interconnected by the use of copper cable exothermically welded to the rods. The grounding cables shall be installed after the excavations for the building have been completed and prior to the pouring of concrete for the footings, mats, etc. Copper "pigtails" shall be connected to the ground grid and shall enter the buildings and structure from the outside and shall be connected to steel structures, and equipment as described in this Section and as required to provide a complete grounding system. The copper pigtails shall be exothermically welded to the ground grid and connected to building reinforcement steel by hydraulic crimp.

2. Grounding conductors shall be continuous between points of connection; splices shall not be permitted.

3. Where conductors are exposed and subject to damage from personnel, traffic, etc., conductors shall be installed in metal raceway. The raceway shall be bonded to the grounding system.

4. Where subsurface conditions do not permit use of driven ground rods to obtain proper ground resistance, rods shall be installed in a trench or plate electrodes shall be provided, as applicable and necessary to obtain proper values of resistance.

5. Buried exothermic welds and ground ring shall not be backfilled until inspected by Engineer.

C. Raceways

1. Conduit which enters equipment such as switchgear, motor control centers, transformers, panelboards, variable frequency drives, instrument and control panels, and similar equipment shall be bonded to the ground bus or ground lug, where provided, and as otherwise required by the NEC.

3.02 TESTING

A. All tests shall be performed in accordance with the requirements of the General Conditions and Division 1. The following tests are required:

1. Witnessed Shop Tests

a. None required.

2. Field Tests

a. Field testing shall be done in accordance with the requirements specified in the General Conditions, Division 1, and NETA Acceptance Testing Specifications, latest edition.

b. Fall of potential tests shall be performed on the ground grid per IEEE81 recommendations by a third party, independent testing firm. A fall of potential plot shall be submitted at the conclusion of testing for Engineer review. Documentation indicating the location of the rod and grounding system as well as the resistance and soil conditions at the time the measurements were made shall be submitted. Testing shall show that the ground grid has 5 ohms resistance or less. Due to soil conditions and/or unforeseen field conditions, ground resistances greater than 5 ohms may be acceptable if specifically approved in writing by the Engineer. Ground resistance measurements shall be made in normally dry weather not less than 48 hours after rainfall and with the ground grid under test isolated from other grounds.

c. Continuity tests for the grounding electrode conductor shall also be performed. Test will be accepted when a resistance of less than 1 ohm is shown for this conductor.

- END OF SECTION -

SECTION 16190

SUPPORTING DEVICES

PART 1 – GENERAL

1.01 THE REQUIREMENT

A. The Contractor shall furnish and install structural supports for mounting and installing all conduit, electrical equipment, lighting, alarm systems, instrumentation, and communications equipment furnished under this Contract.

B. Equipment shall be installed strictly in accordance with recommendations of the manufacturer and best practices of the trade resulting in a complete, operable, and safe installation. The Contractor shall obtain written installation manuals from the equipment manufacturer prior to installation.

C. Reference Section 16000, Basic Electrical Requirements.

1.02 SUBMITTALS

A. In accordance with the procedures and requirements set forth in the General Conditions and Section 01300, Submittals, the Contractor shall obtain from the equipment manufacturer and submit the following:

1. Shop drawings

2. Structural support calculations (if required)

B. Each submittal shall be identified by the applicable Specification section.

1.03 SHOP DRAWINGS

A. Each submittal shall be complete in all respects, incorporating all information and data listed herein and all additional information required for evaluation of the proposed equipment's compliance with the Contract Documents.

B. Partial, incomplete, or illegible submittals will be returned to the Contractor without review for resubmittal.

C. Shop drawings shall include but not be limited to:

1. Product data sheets.

2. Complete assembly, layout, installation, and foundation drawings with clearly marked dimensions.

PART 2 – PRODUCTS

2.01 MANUFACTURERS

A. The equipment covered by this Specification is intended to be standard equipment of proven performance as manufactured by reputable concerns. Equipment shall be designed, constructed, and installed in accordance with the best practices of the trade, and shall operate satisfactorily when installed as shown on the Drawings.

2.02 MATERIALS

A. Support channel shall be 1-5/8” by 1-5/8” minimum, with 12 gage material thickness.

B. Support channel, support channel fittings, and threaded rod shall be furnished with the following material of construction, dependent upon the designation of the area in which they are to be installed. Area designations are indicated on the Drawings.

AREA DESIGNATION	MATERIAL OF CONSTRUCTION
Indoor Dry Non-Process Area	Hot Dipped Galvanized Steel
All Outdoor Areas	Type 316 Stainless Steel

C. Fastening hardware (bolts, nuts, washers, and screws) shall be furnished with the following material of construction, dependent upon the designation of the area in which they are to be installed. Area designations are indicated on the Drawings.

AREA DESIGNATION	MATERIAL OF CONSTRUCTION
Indoor Dry Non-Process Area	Type 316 Stainless Steel
All Outdoor Areas	Type 316 Stainless Steel

PART 3 – EXECUTION

3.01 INSTALLATION

A. Concrete or Masonry Inserts

1. The Contractor shall be responsible for the furnishing and installation of all conduit sleeves, anchor bolts, masonry inserts, and similar devices required for installation of equipment furnished under this Contract.

2. If a time delay for the arrival of any special inserts or equipment drawings, etc. occurs, the Contractor may, if permitted by the Engineer, make arrangements for providing approved recesses and openings in the concrete or masonry and, upon subsequent installation, the Contractor shall be responsible for filling in such recesses and openings. Any additional costs that may be incurred by this procedure shall be borne by the Contractor.

3. The Contractor shall furnish leveling channels for all switchgear, switchboards, motor control centers, and similar floor mounted equipment. The leveling channels shall be provided for embedment in the equipment housekeeping pads. Coordination of the installation of these channels with the concrete pad is essential and required. Pad height shall be as required to maintain concrete coverage of the reinforcement bars while not causing associated equipment to exceed the maximum mounting height requirements of the NEC.

B. Support Fastening and Locations

1. All equipment fastenings to columns, steel beams, and trusses shall be by beam clamps or welded. No holes shall be drilled in the steel.

2. All holes made in reflected ceilings for support rods, conduits, and other equipment shall be made adjacent to ceiling grid bars where possible, to facilitate removal of ceiling panels.

3. Support channel shall be provided wherever required for the support of starters, switches, panels, and miscellaneous equipment.

4. All equipment, devices, and raceways that are installed on the dry side of a water bearing wall shall not be installed directly onto the wall. Support channel shall be used to allow ventilation air to pass behind the equipment, devices, or raceway.

5. All supports shall be rigidly bolted together and braced to make a substantial supporting framework. Where possible, control equipment shall be grouped together and mounted on a single framework.

6. Aluminum support members shall not be installed in direct contact with concrete. Stainless steel or non-metallic "spacers" shall be used to prevent contact of aluminum with concrete.

7. Actual designs for supporting framework should take the nature of a picture frame of support channels and bracket with a plate for mounting the components. The Contractor is responsible for the design of supporting structure; he shall submit design details to the Engineer for acceptance before proceeding with the fabrication.

8. Wherever dissimilar metals come into contact, the Contractor shall isolate these metals as required with neoprene washers, nine (9) mil polyethylene tape, or gaskets.

9. For all installations where fiberglass supporting materials are required, the Contractor shall submit structural calculations and the details of the proposed system of support. Structural calculations shall be signed and sealed by a registered professional engineer in the State of Florida.

10. For the following installations where conduits are provided with a support system suspended from the above or attached to a vertical structure, the Contractor shall submit structural calculations and details of the proposed system of support.

Structural calculations shall be signed and sealed by a registered professional engineer in the State of Florida.

a. A quantity of twelve (12) or more conduits trade size 1” and smaller are proposed for a conduit support rack.

b. A quantity of eight (8) or more conduits trade sizes 1 ½” to 2 1/2” are proposed for a conduit support rack.

c. A quantity of four (4) or more conduits trade sizes 3” and larger are proposed for a conduit support rack.

- END OF SECTION -

SECTION 16195

ELECTRICAL - IDENTIFICATION

PART 1 – GENERAL

1.01 THE REQUIREMENT

A. All electrical equipment shall be properly identified in accordance with these Specifications and the Contract Drawings. All switchgear, switchboards, motor control centers, variable frequency drives, lighting and distribution panelboards, combination starters, control panels, pull and junction boxes, enclosures, disconnect switches, control stations, and similar equipment shall be identified in the manner described, or in an equally approved manner.

B. The types of electrical identification specified in this section include, but are not limited to, the following:

1. Operational instructions and warnings.
2. Danger signs.
3. Equipment/system identification signs.
4. Nameplates.

1.02 SIGNS

A. "DANGER-HIGH-VOLTAGE" signs shall be securely mounted on the entry doors of all electrical rooms.

1.03 LETTERING AND GRAPHICS

A. The Contractor shall coordinate names, abbreviations, and other designations used in the electrical identification work with the corresponding designations shown, specified or scheduled. Provide numbers, lettering, and wording as indicated or, if not otherwise indicated, as recommended by manufacturers or as required for proper identification and operation/maintenance of the electrical systems and equipment.

1.04 SUBMITTALS

A. In accordance with the procedures and requirements set forth in the General Conditions and Section 01300, Submittals, the Contractor shall obtain from the equipment manufacturer and submit shop drawings. Each submittal shall be identified by the applicable specification section.

1.05 SHOP DRAWINGS

A. Each submittal shall be complete in all respects, incorporating all information and data listed herein and all additional information required for evaluation of the proposed equipment's compliance with the Contract Documents.

B. Partial, incomplete, or illegible submittals will be returned to the Contractor without review for resubmittal.

C. Shop drawings shall include but not be limited to:

1. Product data sheets.

PART 2 – PRODUCTS

2.01 MANUFACTURERS

A. The material covered by these Specifications is intended to be standard material of proven performance as manufactured by reputable concerns. Material shall be fabricated, constructed, and installed in accordance with the best practices of the trade, and shall operate satisfactorily when installed as specified herein and shown on the Drawings.

2.02 NAMEPLATES

A. Nameplates shall be engraved, high pressure plastic laminate, white with black lettering.

2.03 HIGH VOLTAGE SIGNS

A. Standard "DANGER" signs shall be of baked enamel finish on 20 gage steel; of standard red, black and white graphics; 14 inches by 10 inches size except where 10 inches by 7 inches is the largest size which can be applied where needed, and except where a larger size is needed for adequate identification.

2.04 CONDUIT IDENTIFICATION

A. Conduit identification shall be as specified in Section 16111, Conduit.

2.05 WIRE AND CABLE IDENTIFICATION

A. Field installed wire and cable identification shall be as specified in Section 16123, Low Voltage Wire and Cable.

B. A plastic laminate nameplate shall be provided at each panelboard, motor control center, switchgear assembly, and switchboard assembly. This nameplate shall be used to clearly convey the conductor identification means used at that piece of equipment (i.e. Phase A=Brown, Phase B=Orange, C = Yellow).

C. Wiring identification for factory installed wiring in equipment enclosures shall be as specified in the respective section.

2.06 BOX IDENTIFICATION

A. Pull, junction and device box identification shall be as specified in Section 16130 – Boxes.

PART 3 – EXECUTION

3.01 NAMEPLATES

A. Nameplates shall be attached to NEMA 4X enclosures utilizing UL-recognized mounting kits designed to maintain the overall UL Type rating of the enclosure. Mounting kit fasteners shall be stainless steel Type AHK10324X as manufactured by Hoffman, or equal. Nameplates shall be attached to other NEMA type equipment enclosures with (2) two stainless steel sheet metal screws for nameplates up to 2-inches wide. For nameplates over 2-inches wide, four (4) stainless steel sheet metal screws shall be used, one (1) in each corner of the nameplate. The utilization of adhesives is not permitted.

3.02 OPERATIONAL IDENTIFICATION AND WARNINGS

A. Wherever reasonably required to ensure safe and efficient operation and maintenance of the electrical systems and electrically connected mechanical systems and general systems and equipment, including prevention of misuse of electrical facilities by unauthorized personnel, install plastic signs or similar equivalent identification, instruction, or warnings on switches, outlets, and other controls, devices, and covers or electrical enclosures. Where detailed instructions or explanations are needed, provide plasticized tags with clearly written messages adequate for the intended purposes. Signs shall be attached as specified above for nameplates.

3.03 POWER SOURCE IDENTIFICATION

A. After installation of all field equipment (i.e. valves, motors, fans, unit heaters, instruments, etc) install nameplates at each power termination for the field equipment. Nameplate data shall include equipment designation (tag number), power source (MCC number, panelboard, etc), circuit number, conduit number from schedule and voltage/phase.

B. Contractor to coordinate with the Engineer and the City regarding exact nameplate placement during construction.

C. Nameplates shall be as specified herein.

- END OF SECTION -

SECTION 16426

LOW VOLTAGE SWITCHBOARDS

PART 1 – GENERAL

1.01 THE REQUIREMENT

A. The Contractor shall furnish, install, test, and place in satisfactory operation, the low voltage switchboards as specified herein and indicated on the Drawings.

B. The line-up shall contain a main lug only connection, feeder breakers, control devices, and all accessories as specified herein, indicated on the Drawings, and as required to result in a complete and operable power distribution equipment assembly.

C. The Contractor shall obtain the switchboard from one manufacturer who shall also manufacture the structure and major equipment components, which includes, but is not limited to, circuit breakers, instrument transformers, meters, relays, and controls. Sub-contracting of wiring is not acceptable.

D. The switchboard shall be assembled using NEMA rated components. Components designed and built to International Electrotechnical Commission (IEC) standards are not recognized. Equipment designed, manufactured and labeled in compliance with IEC standards is not acceptable.

E. Circuit breaker control and relaying/metering circuits shall be wired in accordance with the requirements specified herein or indicated on the Drawings.

1.02 CODES AND STANDARDS

A. All equipment shall be listed by and shall bear the label of Underwriter's Laboratories, Incorporated (U.L.).

B. The equipment shall comply with the following codes and standards:

1. National Electrical Code (NEC)

2. Institute of Electrical and Electronic Engineers (IEEE)

3. American National Standards Institute (ANSI):

   a. C57.13 - Instrument Transformers.

4. National Electrical Manufacturer's Association (NEMA):

   a. AB 1 - Molded Case Circuit Breakers and Molded Case Switches.

   b. PB 2 - Deadfront Distribution Switchboards.

5. Underwriters Laboratories, Inc. (U.L.):

   a. U.L. 98 - Enclosed and Dead Front Switches.

   b. U.L. 489 - Molded Case Circuit Breakers.

   c. U.L. 891 - Dead-Front Switchboards.

1.03 SUBMITTALS

A. In accordance with the procedures and requirements set forth in the General Conditions and Section 01300, Submittals, the Contractor shall obtain from the equipment manufacturer and submit the following:

   1. Shop Drawings

   2. Operation and Maintenance Manuals

   3. Spare Parts List

   4. Reports of Certified Shop and Field Tests

   5. Manufacturer’s Representatives Installation Certification

B. Each submittal shall be identified by the applicable specification section.

1.04 SHOP DRAWINGS

A. Each submittal shall be complete in all respects, incorporating all information and data listed herein and all additional information required for evaluation of the proposed equipment's compliance with the Contract Documents.

B. Partial, incomplete or illegible submissions will be returned to the Contractor without review for resubmittal.

C. Shop drawings for <u>each</u> switchboard <u>assembly</u> shall include but not be limited to:

   1. A Compliance, Deviations, and Exceptions (CD&E) letter. If the shop drawings are submitted without this CD&E letter, the submittal will be rejected. The letter shall include all comments, deviations and exceptions taken to the Drawings and Specifications by the Contractor AND Equipment Manufacturer/Supplier. This letter shall include a copy of this specification section. In the left margin beside each and every paragraph/item, a letter "C", "D", or "E" shall be typed or written in. The letter "C" shall be for full compliance with the requirement. The letter "D" shall be for a deviation from the requirement. The letter "E" shall be for taking exception to a requirement. Any requirements with the letter "D" or "E" beside them shall be provided with a full typewritten explanation of the deviation/exception. Handwritten explanation of the deviations/exceptions is not acceptable. The CD&E letter shall also address deviations, and exceptions taken to each Drawing related to this Specification Section.

2. Product data sheets identifying all electrical ratings.

3. Complete assembly, layout, anchoring, and installation drawings with clearly marked dimensions.

4. Approximate total shipping weight of each equipment assembly.

5. Example equipment nameplate data sheet.

6. Plan, front and side view drawings, including overall dimensions of each switchboard assembly. Identify shipping splits and show conduit stub-up area locations on the Drawings.

7. Internal wiring diagram of each low voltage switchboard assembly. Each wiring diagram shall include wire identification and terminal numbers.

8. Internal interconnection wiring diagrams including wiring identification and terminal numbers.

9. Complete single line diagram for each switchboard line-up. The drawing shall indicate devices comprising the switchboard assembly including, but not limited to, circuit breakers, control power and instrument transformers, relays, and control devices. Clearly indicate electrical ratings of all devices.

10. Bill of material list for each switchboard assembly.

11. Nameplate schedule.

12. Manufacturer's installation instructions.

13. Manufacturer's warranty statement.

The shop drawing information shall be complete and organized in such a way that the Engineer can determine if the requirements of these specifications are being met. Copies of technical bulletins, technical data sheets from "soft-cover" catalogs, and similar information which is "highlighted" or somehow identifies the specific equipment items the Contractor intends to provide are acceptable and shall be submitted.

1.05 OPERATIONS AND MAINTENANCE MANUALS

A. The Contractor shall submit operation and maintenance manuals in accordance with the procedures and requirements set forth in the General Conditions and Division 1. The manuals shall include:

1. Instruction books and/or leaflets.

2. Recommended spare parts list.

3. Final as-built construction drawings included in the shop drawings incorporating all changes made in the manufacturing process and field installation.

1.06 SPARE PARTS

A. The switchboard shall be furnished with all spare parts as recommended by the equipment manufacturer. All spaces in switchboards shall be furnished with a spare circuit breaker where indicated on the Drawings.

B. The spare parts shall be packed in containers suitable for long term storage, bearing labels clearly designating the contents and the pieces of equipment for which they are intended.

C. Spare parts shall be delivered at the same time as the equipment to which they pertain. The Contractor shall properly store and safeguard such spare parts until completion of the Work, at which time they shall be delivered to the City.

D. Spare parts lists, included with the shop drawing submittal shall indicate specific sizes, quantities, and part numbers of the items to be furnished. Terms such as "1 lot of packing material" are not acceptable.

E. Parts shall be completely identified with a numerical system to facilitate parts inventory control and stocking. Each part shall be properly identified by a separate number. Those parts which are identical for more than one size, shall have the same parts number.

1.07 IDENTIFICATION

A. Each switchboard assembly shall be identified with the identification name and/or number indicated on the Drawings (e.g., MAIN SWITCHBOARD). A nameplate shall be securely affixed in a conspicuous place on each switchboard assembly. Nameplates shall be as specified in Section 16195, Electrical - Identification.

PART 2 – PRODUCTS

2.01 MANUFACTURERS

A. The equipment covered by these specifications is intended to be standard equipment of proven performance as manufactured by reputable concerns. Equipment shall be designed, constructed, and installed in accordance with the best practices of the trade, and shall operate satisfactorily when installed as shown on the Drawings.

B. It is the intent of these specifications that the switchboard be produced by a single manufacturer who shall be responsible for matching all components and providing equipment which functions together as a system.

C. The equipment shall be Pow-R-Line C as manufactured by Eaton, Spectra Series as manufactured by the General Electric Company, Square D Company equivalent, or Siemens Energy & Automation, Inc. equivalent.

2.02 CIRCUIT BREAKER SWITCHBOARD

A. General

1. Furnish and install dead-front type, completely metal enclosed, self-supporting

electrical equipment including molded case branch circuit breaker assemblies of the number, rating and type noted on the Drawings. The equipment shall meet Underwriters' Laboratories requirements and shall be a furnished with a U.L. service entrance label where indicated on the Drawings.

2. The main breaker section and distribution section shall be NEMA Type 1 (gasketed) industrial use enclosures. The main circuit breaker section shall be totally accessible from the front and the sides. The distribution switchboard shall be totally accessible from the front and the sides. Equipment assemblies requiring rear access are not acceptable. The framework shall be of U.L. gauge steel. Ventilation shall be provided as required.

3. All wire troughs shall have hinged doors.

4. The equipment assemblies shall be suitable for operation at the available fault current, 65 kA (minimum). The equipment assemblies shall be labeled to indicate the maximum available fault current rating, taking into account the structure, bussing, switchboard branch circuit devices. The short circuit current rating shall not be less than that specified herein or indicated on the Drawings. The distribution switchboard branch circuit devices short circuit current rating shall be fully rated.

5. All bus shall be tin-plated copper. The bussing shall be of sufficient cross sectional area to meet U.L. standard 891 for temperature rise. The fully rated main bus shall have a maximum ampacity as indicated on the Drawings and extend the full length of the equipment. The main bus shall be 100 percent rated. The ground bus shall be sized per U.L. standard 891, installed in the entire length of the equipment assemblies. The distribution switchboard bus shall be rated as required by the rating of the mounted branch devices, including spares or spaces. Full height vertical bus shall be provided to accommodate future circuit breakers. Less than full height vertical bus which will only accommodate the circuit breakers included for this project is unacceptable.

6. Provide engraved plastic nameplates to identify each branch circuit breaker. The circuit number and circuit name shall appear on the nameplate in accordance with the single line diagram(s) indicated on the Drawings. Nameplates shall be as specified in Section 16195, Electrical - Identification.

B. Main Lug Connection

1. The Contractor shall furnish and install a main lug connection as specified herein and indicated on the Drawings.

2. The main lug connection shall be furnished and installed for front and side accessibility.

3. Provide accessories as specified herein or indicated on the Drawings.

C. Distribution Switchboard

1. The distribution switchboard shall include group-mounted branch circuit breakers which are to be totally front accessible and front connectable. The circuit breaker

connections to the distribution panel bussing shall be of bolt-on design such that the connections grip the bus bars firmly under high-fault conditions.

2. The switchboard manufacturer shall provide all the proper lugs for all cable connections as required to avoid field modifications.

3. Branch circuit breakers shall be molded case type with ratings as indicated on the Drawings. Branch circuit breakers shall be rated for 65,000 A RMS symmetrical at 480V.

2.03 SURGE PROTECTIVE DEVICES

A. The switchboard shall be furnished with integrated Type II surge protective devices (SPD). SPDs shall be provided in the location and quantity as shown on the Drawings.

B. The SPD shall be rated, designed, tested, listed, and labeled in accordance with UL-1449, latest edition.

C. The SPD shall be factory installed by the switchboard manufacturer using a direct bus connection. There shall be no cable connection between the bus bar and the SPD device.

D. The SPD shall have a fault current rating equal to or greater than that of the fault current rating of the switchboard. The SPD shall employ metal-oxide varistor (MOV) technology. If integral fusing is used, the fuses shall allow the maximum rated surge current to pass without fuse operation.

E. The SPD shall have a maximum continuous operating voltage (MCOV) of at least 115% of the nominal voltage of the switchboard. The Voltage Protection Rating (VPR) of each SPD shall <u>not exceed</u> the following:

SYSTEM VOLTAGE	L-N	L-G	L-L	N-G
208Y/120	700V	700V	1200V	700V
480Y/277	1200V	1200V	1800V	1200V
480 DELTA	N/A	1200V	2000V	N/A
240 DELTA	N/A	1200V	1200V	N/A
120/240	700V	700V	1200V	700V

F. The Nominal Discharge Current (I_n) of the SPD shall be 20kA. Peak surge current ratings <u>shall not</u> be used as a basis for applying the SPD to the system.

The surge current rating for each SPD shall be as indicated on the Drawings. Surge current ratings are indicated on single line diagrams. Surge current rating indicated is on a per phase basis.

G. Each SPD system shall provide surge protection in all possible modes. Surge protection shall be as follows:

SYSTEM CONFIGURATION	MODES OF PROTECTION	NUMBER OF MODES
3-Phase Wye	L-N, L-G, N-G	7
3-Phase Delta	L-L, L-G	6
3-Phase Impedance Grounded	L-L, L-G	6
Single-Phase	L-N, L-G, N-G	3

H. The SPD shall be furnished with an audible alarm and silence pushbutton, integral SPD status LEDs (one per phase), and a Form C dry contact for remote indication of alarm. A surge counter shall also be provided.

I. The SPD equipment shall be SPD Series by Eaton, SurgeLogic by the Square D Company, Tranquell by the General Electric Company, Siemens Energy and Automation Inc. equivalent, or equal.

PART 3 – EXECUTION

3.01 INSTALLATION

A. The switchboard shall be furnished and installed as shown on the Drawings and in accordance with the manufacturer's installation instructions. One (1) copy of these instructions shall be included with the equipment at time of shipment. The equipment shall be suitably protected until accepted by the City.

B. The equipment shall be installed and checked in accordance with the manufacturer's recommendations. This shall include but not limited to:

1. Checking to ensure that the pad location is level to within .125 inches.

2. Checking to ensure that all bus bars are torqued to the manufacturer's recommendations.

3. Assemble all shipping sections, remove all shipping braces and connect all shipping split mechanical and electrical connections.

4. Secure assemblies to foundation or floor channels.

5. Inspect and install all circuit breakers in their proper places.

3.02 PAINTING

A. Prior to final completion of the work, all metal surfaces of the equipment shall be cleaned thoroughly, and all scratches and abrasions shall be retouched with the same lacquer as used for shop finishing coats.

3.03 TESTING

A. All tests shall be performed in accordance with the requirements of the General Conditions, and Division 1. The following tests are required:

1. Witness Shop Tests

a. Not required.

2. Certified Shop Tests and Reports

a. Submit description of proposed testing methods, procedures, and apparatus. Submit notarized and certified copies of all test reports.

b. As a minimum, the entire switchboard assembly shall go through a quality inspection before shipment. This inspection shall include, but is not limited to, the following:

i. Physical inspection of the structure and the electrical conductors including bussing, general wiring, and units.

ii. General electrical tests including power circuit phasing, control circuit wiring, instrument transformers, meters, ground fault system, and device electrical operation.

iii. AC dielectric tests of the power circuits and control circuits.

iv. Markings/labels, including instructional type, Underwriters Laboratory (U.L.), and inspector's stamps.

The manufacturer shall use integral quality control checks throughout the manufacturing process to maintain the correctness of the switchboard.

3. Field Tests

a. Field tests shall be performed in accordance with requirements specified in the General Conditions, Division 1, and NETA Acceptance Testing Specifications, latest edition

3.04 SERVICES OF MANUFACTURER'S REPRESENTATIVE

A. The Contractor shall provide the services of a qualified, factory-trained manufacturer's technical representative who shall adequately supervise the installation and testing of all equipment furnished under this Contract. The manufacturer's representative shall certify in writing that the equipment has been installed in accordance with the manufacturer's recommendations. No further testing or equipment startup may take place until this certification is accepted by the City.

B. The manufacturer’s technical representative shall perform startup and functional testing of the switchboard and controls as specified herein.

C. The Contractor shall provide training for City personnel. Training shall be conducted by the manufacturer's factory-trained representative who shall instruct City personnel in operation and maintenance of all equipment provided under this Section. Training shall be provided for two (2) sessions of four (4) hours each. Training shall not take place until after all switchboard units have been installed and energized. Training shall be at times coordinated with the City.

D. The services of the manufacturer's representative shall be provided for a period of not less than as follows:

1. One (1) trip of two (2) working days during the installation of the switchboard.

2. One (1) trip of two (2) working days for the testing and startup of the switchboard.

3. One (1) trip of one (1) working day to perform training as specified herein.

4. One (1) trip of one (1) working day two (2) months before the warranty expiration to identify any issues to be corrected under warranty.

E. Any additional time required to achieve successful installation and operation shall be at the expense of the Contractor.

3.05 FIELD ADJUSTMENTS

A. The circuit breaker trip units shall be set in the field by a qualified representative of the manufacturer, or an outside testing company retained by the Contractor, in accordance with the settings designated in the coordination study. See Section 16000 – Basic Electrical Requirements.

- END OF SECTION -

SECTION 16440

SAFETY SWITCHES

PART 1 – GENERAL

1.01 THE REQUIREMENT

A. The Contractor shall furnish and install separately mounted, individual safety switches as specified herein and indicated on the Drawings.

B. Safety switches for process instruments are not included in the scope of this Section and shall be as specified in Specification Section entitled “Wiring Devices.”

1.02 CODES AND STANDARDS

A. Safety switches shall be designed, manufactured, and/or listed to the following standards as applicable:

1. UL 98 – Enclosed and Dead-Front Switches

2. NEMA 250 – Enclosures for Electrical Equipment

3. NEMA KS 1 – Heavy Duty Enclosed and Dead-Front Switches

1.03 SUBMITTALS

A. In accordance with the procedures and requirements set forth in the General Conditions and Specification Section entitled “Submittals,” the Contractor shall obtain from the equipment manufacturer and submit the following:

1. Shop Drawings

2. Spare Parts List

B. Each submittal shall be identified by the applicable specification section.

1.04 SHOP DRAWINGS

A. Each submittal shall be complete in all respects, incorporating all information and data listed herein and all additional information required for evaluation of the proposed equipment's compliance with the Contract Documents.

B. Partial, incomplete or illegible submittals will be returned to the Contractor without review for resubmittal.

C. Shop drawings shall include but not be limited to:

1. Product data sheets.

2. Complete layout and installation drawings with clearly marked dimensions for each type/size/rating of safety switch.

3. Assembled weight of each unit.

D. The shop drawing information shall be complete and organized in such a way that the Engineer can determine if the requirements of these Specifications are being met. Copies of technical bulletins, technical data sheets from "soft-cover" catalogs, and similar information which is "highlighted" or somehow identifies the specific equipment items that the Contractor intends to provide are acceptable and shall be submitted.

1.05 SPARE PARTS

A. The equipment shall be furnished with all spare parts as recommended by the equipment manufacturer.

B. One (1) complete set of spare fuses for each ampere rating installed shall be furnished and delivered to the City at the time of final inspection.

C. Spare parts lists, included with the shop drawing submittal, shall indicate specific sizes, quantities, and part numbers of the items to be furnished. Terms such as "1 lot of packing material" are not acceptable.

D. Parts shall be completely identified with a numerical system to facilitate parts inventory control and stocking. Each part shall be properly identified by a separate number. Those parts which are identical for more than one size, shall have the same parts number.

1.06 IDENTIFICATION

A. Each equipment item shall be identified with a nameplate. The nameplate shall be engraved indicating the circuit number and equipment name with which it is associated. Equipment identification shall be in accordance with Specification Section entitled “Electrical - Identification.”

PART 2 - PRODUCTS

2.01 MANUFACTURERS

A. The equipment covered by this Specification is intended to be standard equipment of proven performance as manufactured by reputable concerns. Equipment shall be designed, constructed and installed in accordance with the best practices of the trade, and shall operate satisfactorily when installed as shown on the Drawings.

B. Switches shall be manufactured by the Square D Company, Eaton, the General Electric Company, or Siemens Energy and Automation, Inc.

2.02 GENERAL

A. Safety switches shall be heavy-duty type and shall be furnished and installed as shown on the Drawings and as required by the NEC.

B. Safety switches for non-hazardous areas shall be UL 98 Listed. Safety switches for hazardous areas shall be UL 1203 Listed.

C. Switches shall meet NEMA Standard KS 1 type HD requirements, be externally operable, and be fused or non-fused as indicated on the Drawings. Switches shall have the number of the poles, voltage, and ampere ratings as shown on the Drawings.

D. Double-throw safety switches shall have an “OFF” position in which the load is disconnected from both sources simultaneously.

E. In non-hazardous locations, safety switches shall be furnished with the following enclosure type and material of construction, dependent upon the designation of the area in which they are to be installed. Area designations are indicated on the Drawings.

AREA DESIGNATION	**ENCLOSURE TYPE AND MATERIAL**
Indoor Dry Non-Process Area	NEMA 1, Painted Steel
All Outdoor Areas	NEMA 4X, Type 316 Stainless Steel

F. Safety switches shall be quick-make, quick-break and shall be equipped with a defeatable door interlock which prevents the door from being opened when switch is in the "ON" position. Safety switches shall be capable of being padlocked in the "OPEN" position.

G. A complete set of fuses for all switches shall be furnished and installed as required. Time-current characteristic curves of fuses serving motors or connected in series with circuit breakers shall be coordinated for proper operation. Fuses shall have voltage rating not less than the circuit voltage.

H. Safety switches shall be furnished with a factory installed internal barrier kit that helps prevent accidental contact with live parts and provides “finger-safe” protection when the door of the enclosed switch is open.

I. Safety switches shall be furnished with a manufacturer-supplied ground lug kit for termination of equipment grounding conductors. Where a grounded (neutral) conductor is shown on the Drawings in the conduits connected to the safety switch, a manufacturer-supplied neutral bar shall be furnished for termination of the grounded conductors. Third party ground lug and neutral lug kits not supplied by the safety switch manufacturer are not acceptable.

J. Fused safety switches shall be furnished for motor operated valve and gate actuators where shown on the Drawings. The Contractor shall coordinate the supply of these fused switches with the specific requirements of the actuator. Fuses with fast fault clearing times may be required for modulating valve actuators.

K. Where indicated on the drawings or otherwise, and for all motors connected to variable frequency drives (VFDs), safety switches shall be furnished with a factory installed electrical interlock kit that includes early-break auxiliary contacts, rated as described below:

Type	Volts	Amperes (AC)			Amperes (DC)		
		Make	Break	Cont.	Make	Break	Cont.
1 Form C	120	40.0	15.0	15.0	115	0.50	15.0
	240	20.0	10.0	15.0	230	0.25	15.0
	480	10.0	6.0	15.0	—	—	—
	600	8.0	5.0	15.0	600	0.05	15.0
2 Form C	120	30.0	3.0	10.0	115	1.00	10.0
	240	15.0	1.5	10.0	230	0.30	10.0
	480	7.5	0.75	10.0	—	—	—
	600	6.0	0.60	10	600	0.10	10.0

In VFD applications, early-break auxiliary contact shall be used to open the control circuit before the main switch blades break.

L. Where indicated, safety switches shall be suitable for use as service entrance equipment and shall bear a U.L label indicating suitability.

PART 3 - EXECUTION

3.01 INSTALLATION

A. All safety switches shall be mounted five (5) feet above the floor or finished grade, at the equipment height where appropriate, or where shown otherwise.

B. Safety switches shall be provided in the enclosure type and material of construction required for the area in which it is installed. Reference the requirements in Part 2 herein, and the area designations indicated on the Drawings.

3.02 TESTING

A. All tests shall be performed in accordance with the requirements of the General Conditions and Division 1. The following tests are required:

1. Field Tests

a. Field testing shall be done in accordance with the requirements specified in the General Conditions, Division 1, and NETA Acceptance Testing Specifications, latest edition.

- END OF SECTION -

SECTION 16461

DRY TYPE DISTRIBUTION TRANSFORMERS

PART 1 – GENERAL

1.01 THE REQUIREMENT

A. The Contractor shall furnish, install, and test transformers for power and lighting distribution systems as specified herein, as indicated on the Drawings, and as required to complete the electrical installations.

B. All equipment specified in this Section shall be furnished by the transformer manufacturer who shall be responsible for the suitability and compatibility of all included equipment.

C. Reference Section 16000, Basic Electrical Requirements.

1.02 CODES AND STANDARDS

A. Transformers shall conform to all applicable Federal, UL, and NEMA standards. Materials and components shall be new and conform to grades, qualities and standards as specified herein and shown on the Drawings.

B. Transformers shall comply with the following standards:

1. UL 1561 – Dry Type General Purpose and Power Transformers
2. U.S. Department of Energy 2016 Efficiency
3. National Electrical Code
4. NEMA ST-20 – Dry Type Transformers for General Applications
5. ANSI C57 – Standard General Requirements for Dry Type Distribution and Power Transformers
6. Department of Energy 2016 Efficiency Standards

1.03 SUBMITTALS

A. In accordance with the procedures and requirements set forth in the General Conditions and Division 1, the Contractor shall obtain from the equipment manufacturer and submit the following:

1. Shop Drawings.
2. Operation and Maintenance Manuals.
3. Spare Parts List.

4. Reports of Certified Shop Field Tests.

B. Each submittal shall be identified by the applicable specification section.

1.04 SHOP DRAWINGS

A. Each submittal shall be complete in all respects, incorporating all information and data listed herein, and all additional information required for evaluation of the proposed equipment's compliance with the Contract Documents.

B. Partial, incomplete, or illegible submittals will be returned to the Contractor without review for resubmittal.

C. Shop drawings shall include but not be limited to:

1. Product data sheets.

2. Drawings showing clearly marked dimensions and weight for each transformer.

3. Sample equipment nameplate diagram.

D. The submittal information shall reflect the specific equipment identification number as indicated on the Drawings (e.g. LT-1).

E. The shop drawing information shall be complete and organized in such a way that the Engineer can determine if the requirements of these Specifications are being met. Copies of technical bulletins, technical data sheets from "soft-cover" catalogs, and similar information which is "highlighted" or somehow identifies the specific equipment items that the Contractor intends to provide are acceptable and shall be submitted.

1.05 OPERATION AND MAINTENANCE MANUALS

A. The Contractor shall submit operation and maintenance manuals in accordance with the procedures and requirements set forth in the General Conditions and Division 1.

1.06 SPARE PARTS

A. All spare parts as recommended by the equipment manufacturer shall be furnished to the City by the Contractor.

B. Spare parts lists, included with the Shop Drawing submittal, shall indicate specific sizes, quantities, and part numbers of the items to be furnished. Terms such as "1 lot of packing material" are not acceptable.

C. Parts shall be completely identified with a numerical system to facilitate parts inventory control and stocking. Each part shall be properly identified by a separate number. Those parts which are identical for more than one size, shall have the same parts number.

1.07 IDENTIFICATION

A. Each transformer shall be identified with the equipment item number indicated on the Contract Drawings and the accepted Shop Drawings. A nameplate shall be securely affixed in a conspicuous place on each transformer. Nameplates shall be as specified in Section 16195, Electrical - Identification.

PART 2 -- PRODUCTS

2.01 MANUFACTURERS

A. The equipment covered by this Specification is intended to be standard equipment of proven performance as manufactured by reputable concerns. Equipment shall be designed, constructed and installed in accordance with the best practices of the trade, and shall operate satisfactorily when installed as shown on the Drawings.

B. Dry type distribution transformers shall be Energy Star compliant and manufactured by the Square D Company, the General Electric Company, Eaton, or Siemens Energy and Automation, Inc.

2.02 DRY TYPE TRANSFORMERS

A. Furnish and install single-phase and three-phase general purpose, dry-type transformers, as specified herein and indicated on the Drawings. The transformers shall be 60 Hz, self-cooled, quiet-design insulated of the two-winding type.

B. The transformers shall be UL 1561 Listed.

C. The primary windings shall be rated 480 VAC for use on 3-phase systems and connected delta unless indicated otherwise on the Drawings. KVA ratings shall be as shown on the Drawings. Furnish transformers with two 2-1/2% primary taps above, and four 2-1/2% primary taps below rated voltage for transformers 15 KVA and above, and two 2-1/2% primary taps above, and two 2-1/2% primary taps below rated voltage for transformers less than 15 kVA. All taps shall be full capacity rated.

D. The ratings of the secondary windings shall be as indicated on the Drawings.

E. Transformers shall be designed for continuous operation at rated KVA, 24 hours a day, 365 days a year, with normal life expectancy as defined in IEEE 65 and ANSI C57.96. This performance shall be obtainable without exceeding 150 degrees Celsius average temperature rise by resistance or 180 degrees Celsius hot spot temperature rise in a 40 degree Celsius maximum ambient and 30 degrees Celsius average ambient. The maximum coil hot spot temperature shall not exceed 220 degrees Celsius. All insulating materials shall be flame retardant and shall not support combustion as defined in ASTM Standard Test Method D 635. All insulating materials shall be in accordance with NEMA ST 20 Standard for a 220 degrees Celsius UL component recognized insulation system.

F. Transformer coils shall be of the continuous wound copper construction and shall be impregnated with nonhygroscopic, thermosetting varnish.

G. All cores are to be constructed of high grade, nonaging, grain-oriented silicon steel with high magnetic permeability and low hysteresis and eddy current loses. Magnetic flux densities are to be kept well below the saturation point. The core laminations shall be tightly clamped and compressed with structural steel angles. The completed core and coil shall then be bolted to the base by means of vibration-absorbing mounts to minimize sound transmission. There shall be no metal-to-metal contact between the core and coil assembly and the enclosure.

H. All transformers shall be equipped with a wiring compartment suitable for conduit entry and large enough to allow convenient wiring. The maximum temperature of the enclosure shall not exceed 90 degrees Celsius. Transformers shall be furnished with lugs of the size and quantity required and suitable for termination of the field wiring.

I. The core of the transformer shall be visibly grounded to the enclosure by means of a flexible grounding conductor sized in accordance with applicable NEMA, IEEE, and ANSI standards.

J. Transformers shall have core and coil assemblies mounted on rubber isolation pads to minimize the sound levels. Transformers shall not exceed the sound levels listed in NEMA ST-20.

K. Transformers shall be furnished with the following enclosure type and material of construction, dependent upon the designation of the area in which they are to be installed. Area designations are indicated on the Drawings.

AREA DESIGNATION	**ENCLOSURE TYPE AND MATERIAL**
Indoor Dry Non-Process Area	NEMA 2, Painted Steel
All Outdoor Areas	NEMA 3R, Painted Steel

L. The enclosure shall be made of heavy gauge steel and shall be degreased, cleaned, primed, and finished with a baked weather-resistant enamel using the manufacturer's standard painting process. Color shall be ANSI 61.

PART 3 -- EXECUTION

3.01 INSTALLATION

A. The transformers shall be furnished and installed as shown on the Drawings and as recommended by the equipment manufacturer.

B. Conduit routed to and from the transformer shall be arranged for easy removal of the transformer access covers.

C. Where transformers 50 kVA and smaller are shown to be wall mounted, a transformer manufacturer supplied wall mounting kit shall be used. The lowest point of the wall mounting bracket shall be no lower than 7'-0" above the finished floor. Field fabricated

mounting hardware is not acceptable unless reviewed and approved in writing by the Engineer.

D. Prior to final completion of the work, all metal surfaces of the equipment shall be cleaned thoroughly, and all scratches and abrasions shall be retouched with the same lacquer as used for shop finishing coats.

3.02 TESTING

A. All tests shall be performed in accordance with the requirements of the General Conditions and Division 1. The following tests are required:

1. Certified Shop Tests

a. The transformers shall be given routine factory tests in accordance with the requirements of the ANSI and NEMA standards. Temperature rises may be certified from basic design.

b. As a minimum, the following tests shall be made on all transformers:

i. Ratio tests on the rated voltage connection and on all tap connections.

ii. Polarity and phase-relation tests on the rated voltage connection.

iii. Applied potential tests.

iv. Induced potential tests.

v. No-load and excitation current at rated voltage on the rated voltage connection.

2. Field Tests

a. Field testing shall be done in accordance with the requirements specified in the General Conditions, Division 1, and NETA Acceptance Testing Specifications, latest edition.

b. Insulation between windings shall be tested by 1000 VDC Megaohmeter for one (1) minute. Resistance value shall be no less than 100 Megaohms.

- END OF SECTION -

SECTION 16470

PANELBOARDS

PART 1 – GENERAL

1.01 THE REQUIREMENT

A. The Contractor shall furnish and install panelboards of voltage and current ratings as specified herein and indicated on the Drawings. Panelboards shall be furnished with circuit breaker ratings, number of breakers, number of poles and locations conforming to the panelboard schedules on the Drawings.

B. Reference Section 16000, Basic Electrical Requirements; Section 16195, Electrical Identification.

1.02 CODES AND STANDARDS

A. Panelboards shall be designed, manufactured, and/or listed to the following standards as applicable:

1. Underwriters Laboratories

   a. UL 50 – Enclosures for Electrical Equipment, Non-environmental Considerations

   b. UL 67 – Standard for Panelboards

   c. UL 489 - Molded Case Circuit Breakers, Molded Case Switches, and Circuit Breaker Enclosures

   d. UL 943 – Ground Fault Circuit Interrupters

   e. UL 1449 – Standard for Surge Protective Devices

2. NEMA PB1 - Panelboards

3. National Electrical Contractors Association (NECA) Standard 407 – Standard for Installing and Maintaining Panelboards

1.03 SUBMITTALS

A. In accordance with the procedures and requirements set forth in the General Conditions and Section 01300, Submittals, the Contractor shall obtain from the equipment manufacturer and submit the following:

1. Shop Drawings.

2. Spare Parts List.

3. Operation and Maintenance Manuals.

4. Reports of Field Tests.

B. Each submittal shall be identified by the applicable specification section.

1.04 SHOP DRAWINGS

A. Each submittal shall be complete in all respects, incorporating all information and data listed herein and all additional information required for evaluation of the proposed equipment's compliance with the Contract Documents.

B. Partial, incomplete, or illegible submittals will be returned to the Contractor without review for resubmittal.

C. Shop drawings shall include but not be limited to:

1. Product data sheets.

2. Complete assembly, layout, and installation drawings with clearly marked dimensions for each panelboard.

3. Complete panelboard schedules indicating circuit designations as shown on the Drawings for each panelboard.

D. The submittal information shall reflect the specific equipment identification number as indicated on the Drawings (e.g., LP-1).

1.05 OPERATIONS AND MAINTENANCE MANUALS

A. The Contractor shall submit operation and maintenance manuals in accordance with the procedures and requirements set forth in the General Conditions and Division 1. The manuals shall include:

1. Instruction books and/or leaflets.

2. Recommended spare parts list.

3. Final as-built construction drawings included in the shop drawings incorporating all changes made in the manufacturing process and during field installation.

1.06 SPARE PARTS

A. For each panelboard, the Contractor shall furnish to the City all spare parts as recommended by the equipment manufacturer. All spaces in the panelboards shall be furnished with a spare breaker as indicated in the panelboard schedules shown on the Drawings.

B. Spare parts lists, included with the shop drawing submittal, shall indicate specific sizes, quantities, and part numbers of the items to be furnished. Terms such as "1 lot of packing material" are not acceptable.

C. Parts shall be completely identified with a numerical system to facilitate parts inventory control and stocking. Each part shall be properly identified by a separate number. Those parts which are identical for more than one size shall have the same parts number.

1.07 IDENTIFICATION

A. Each panelboard shall be identified with the identification name/number indicated on the Drawings. A nameplate shall be securely affixed in a conspicuous place on each panelboard. Nameplates shall be as specified in Section 16195, Electrical - Identification.

PART 2 – PRODUCTS

2.01 MANUFACTURERS

A. The Equipment shall be designed, constructed and installed in accordance with the best practices of the trade, and shall operate satisfactorily when installed as shown on the Drawings.

2.02 CONDUCTORS (MAIN BUS AND BRANCH CONNECTORS)

A. All main bus shall be copper sized in accordance with UL standards to limit the temperature rise on any current carrying part to a maximum of 50 degrees C above a maximum ambient temperature of 40 degrees C.

2.03 LIGHTING PANELBOARDS

A. General

1. Lighting panelboards shall be dead-front type with automatic trip-free, non-adjustable, thermal-overload, branch circuit breakers. Panelboards shall be of the configuration and rating as specified herein and indicated on the Drawings. Panelboards shall be UL 67 Listed and shall be constructed to NEMA PB1 standards. Panelboards shall be service entrance rated where indicated on the Drawings.

2. Lighting panelboards shall be equipped with a main breaker or main lugs complete with branch circuit breakers, as indicated on the Drawings. The panelboards shall be suitable for flush or surface mounting.

3. Lighting panelboards shall be fully rated and shall have a minimum short circuit rating of 22,000 amperes symmetrical, unless otherwise indicated on the Drawings.

4. Lighting panelboards shall be Eaton Pow-R-Line Series, the Square D Company equivalent, the General Electric Company equivalent, or Siemens Energy and Automation, Inc. equivalent.

B. Enclosures

1. Enclosures shall have a NEMA rating as indicated on the Drawings, shall be UL 50 Listed, and shall be constructed of No. 12 U.S.S. code gauge galvanized steel. The door shall be fastened to the enclosure with concealed hinges and shall be equipped with flush-type catches and locks. The Contractor shall equip cabinet doors exceeding 40 inches in height with vertical bolt three point locking mechanism. All locks shall be keyed alike. The panelboard trim shall have a removable hinge assembly, in addition to the door hinge, that allows work inside the enclosure without the need to remove the trim. The enclosure shall have wiring gutters on sides and shall be at least 5-3/4 inches deep. The panelboard shall be provided with an information label. The information label shall include the panelboard designation, voltage, phase, wires, and bus rating.

2. All metal surfaces of the panelboard enclosures shall be thoroughly cleaned and given one prime of zinc chromate primer. All interior surfaces shall then be given one shop finishing coat of a lacquer of the nitro-cellulose enamel variety. All exterior surfaces shall be given three coats of the same lacquer. The color of finishing coats shall be light gray ANSI #61.

3. An Underwriter's Laboratories, Inc. inspection label shall appear on the interior of the cabinet.

C. Bus Work

1. Main bus bars shall be of ample size so that a current density of not more than 1000 amperes per square inch of cross section will be attained. This current density shall be based on the application of the full load connected to the panel plus approximately 25% of the full load for spare capacity. The main bus shall be full capacity as based on the preceding for the entire length of the panel so as to provide full flexibility of circuit arrangement.

2. Solid neutral bus bars are required and neutral bus ampacity shall be the same as the main bus bars unless otherwise noted. Ratings shall be in accordance with applicable standards.

3. A separate ground bus shall be provided with lugs for termination of equipment grounding conductors.

4. Branch bus work shall be rated to match the maximum branch circuit breaker which may be installed in the standard space.

5. All bus shall be tin plated copper and shall extend the entire useable length of the panelboard, including spaces.

D. Circuit Breakers

1. Circuit breakers shall be bolt-on, molded-case type and UL 489 Listed. All circuit breakers shall have quick-make, quick-break, toggle mechanism for manual as well as automatic operation. Tandem or half-size circuit breakers are not acceptable

2. Where indicated on the Drawings, or where required by Code, circuit breakers shall be equipped with integrally mounted ground fault interrupters complete with "TEST" push button and shall be of a type which fit standard panelboard spaces for the breaker continuous current rating required. Ground fault circuit interrupter style circuit breakers shall be UL 943 Listed. Circuit breakers used for lighting circuit switching shall be approved for the purpose and shall be marked "SWD". Where required by Article 440 of the NEC, circuit breakers installed for air conditioning units shall be HACR type.

3. Circuit breaker voltage ratings shall meet or exceed the panelboard voltage indicated on the Drawings. Trip elements of circuit breakers shall be 20A unless otherwise indicated on the Drawings. Circuit breakers shall have an interrupting rating at 240 VAC that matches the panelboard short circuit rating.

4. Where indicated on the Drawings, branch circuit breakers shall be provided with a padlockable hasp or handle padlock attachment for padlocking in the off position as required to meet the NEC requirement for disconnecting means and/or OSHA lock-out/tagout standard. Locking hardware shall remain in place even when the padlock is removed. Branch circuit breakers shall be provided with a similar lock-on device where indicated on the Drawings.

E. Directories

1. Approved directories with noncombustible plastic cover, and with typewritten designations of each branch circuit, shall be furnished and installed in each panelboard. The Contractor shall maintain in each panel, during the duration of the Contract, a handwritten directory clearly indicating the circuit breakers in service. This directory shall be updated as work progresses, and final, typewritten directories, as specified above, shall be installed at the end of the project. Designations and circuit locations shall conform to the panelboard schedules on the Drawings, except as otherwise authorized by the Engineer.

2.04 POWER DISTRIBUTION PANELBOARDS

A. General

1. Power distribution panelboards shall be of the configuration and rating as specified herein and as indicated on the Drawings. The panelboards shall be dead-front type with automatic trip-free, non-adjustable, thermal overload branch circuit breakers. Panelboards shall be UL 67 Listed and shall be constructed to NEMA PB1 standards. Panelboards shall be service entrance rated where indicated on the Drawings.

2. Power panelboards shall be equipped with a main breaker or main lugs complete with branch circuit breakers as indicated on the Drawings. The panelboards shall be suitable for flush or surface mounting.

3. Power distribution panelboards shall be fully rated and shall have a minimum short circuit rating of 65,000 amperes symmetrical unless otherwise indicated on the Drawings.

4. Power distribution panelboards shall be Eaton Pow-R-Line Series, the Square D Company equivalent, the General Electric Company equivalent, or Siemens Energy and Automation, Inc. equivalent.

B. Enclosures

1. Enclosures shall have a NEMA rating as indicated on the Drawings, shall be UL 50 Listed, and shall be constructed of No. 12 U.S.S. code gauge galvanized steel. The door shall be fastened to the enclosure with concealed hinges and shall be equipped with flush-type catches and locks. The Contractor shall equip cabinet doors exceeding 40 inches in height with vertical bolt three-point locking mechanism. All locks shall be keyed alike. The panelboard trim shall have a removable hinge assembly, in addition to the door hinge, that allows work inside the enclosure without the need to remove the trim. The enclosure shall have wiring gutters on sides and shall be at least 5-3/4 inches deep. The panel shall be provided with an information label. The information label shall include the panelboard designation, voltage, phase, wires, and bus rating.

2. All metal surfaces of the panelboard enclosures shall be thoroughly cleaned and given one prime of zinc chromate primer. All interior surfaces shall then be given one shop finishing coat of a lacquer of the nitro-cellulose enamel variety. All exterior surfaces shall be given three coats of the same lacquer. The color of finishing coats shall be light gray ANSI #61.

3. An Underwriter's Laboratories, Inc. inspection label shall appear on the interior of the cabinet.

C. Bus Work

1. Main bus bars shall be of ample size so that a current density of not more than 1,000 amperes per square inch of cross section will be attained. This current density shall be based on the application of the full load connected to the panel plus approximately 25% of the full load for spare capacity. The main bus shall be full capacity as based on the preceding for the entire length of the panel so as to provide full flexibility of circuit arrangement.

2. Solid neutral bus bars, where required, shall be provided. Neutral bus shall have the same ampacity as the main bus, unless otherwise indicated. Ratings shall be in accordance with applicable standards.

3. A separate ground bus shall be provided with lugs for termination of equipment grounding conductors.

4. Branch bus work shall be rated to match the maximum branch circuit breaker which may be installed in the standard space.

5. All bus shall be tin plated copper and shall extend the entire useable length of the panelboard, including spaces. Panelboards Listed and Labeled as a four-wire panel shall not be used in place of a three-wire panel where a neutral conductor does not exist in the supply conductors to that panel.

D. Circuit Breakers

1. Circuit breakers shall be bolt-on, molded-case type and UL 489 Listed. All circuit breakers shall have quick-make, quick-break, toggle mechanism for manual as well as automatic operation.

2. Circuit breakers used for lighting circuit switching shall be approved for the purpose and shall be marked “SWD” where required by Article 440 by the NEC. Circuit breakers installed for air conditioning units shall be HACR type.

3. Circuit breaker voltage rating shall meet or exceed the panelboard voltage indicated on the Drawings. Trip elements of circuit breakers shall be 20A, unless otherwise indicated on the Drawings. Circuit breakers shall have an interrupting rating at 480 VAC that matches the panelboard short circuit rating.

4. Where indicated on the Drawings, branch circuit breakers shall be provided with a padlockable hasp or handle padlock attachment for padlocking in the off position as required to meet the NEC requirement for disconnecting means and/or OSHA lock-out/tagout standard. Locking hardware shall remain in place even when the padlock is removed. Branch circuit breakers shall be provided with a similar lock-on device where indicated on the Drawings.

E. Directories

1. Approved directories with noncombustible plastic cover, and with typewritten designations of each branch circuit, shall be provided in each panel. The Contractor shall maintain in each panel, during the duration of the Contract, a handwritten directory clearly indicating the circuit breakers in service. This directory shall be updated as work progresses, and final, typewritten directories, as specified above, shall be installed at the end of the project. Designations and circuit locations shall conform to the panelboard schedules on the Drawings, except as otherwise authorized by the Engineer.

2.05 COMBINATION POWER UNITS

A. Combination power units shall be installed as specified herein and indicated on the Drawings. The unit shall be a combination of a transformer and a lighting panelboard. Transformer rating, primary circuit breaker rating, secondary circuit breaker rating, and panelboard bus rating shall be as indicated on the Drawings. The transformer and panelboard shall meet the requirements for these products as specified herein and elsewhere in these Specifications.

B. Combination power units located outdoors shall be suitable for outdoor use and be provided in a NEMA 3R enclosure unless otherwise indicated on the Drawings.

C. Combination power units shall have all copper windings and terminations. The transformer shall be 115°C temperature rise and epoxy resin encapsulated.

D. The combination power unit shall be a Mini-Power Zone as manufactured by the Square D Company, a Mini-Power Center as manufactured by Eaton, Servicecenter as manufactured by General Electric Company, or Siemens Energy and Automation, Inc. equivalent.

2.06 SURGE PROTECTIVE DEVICES

A. The panelboards shall be furnished with integrated Type II surge protective devices (SPD). SPDs shall be provided in the location and quantity as shown on the Drawings.

B. The SPD shall be rated, designed, tested, listed, and labeled in accordance with UL-1449, latest edition.

C. The SPD shall be factory installed by the panelboard manufacturer using a direct bus connection. There shall be no cable connection between the bus bar and the SPD device.

D. The SPD shall have a fault current rating equal to or greater than that of the fault current rating of the panelboard. The SPD shall employ metal-oxide varistor (MOV) technology. If integral fusing is used, the fuses shall allow the maximum rated surge current to pass without fuse operation.

E. The SPD shall have a maximum continuous operating voltage (MCOV) of at least 115% of the nominal voltage of the panelboard. The Voltage Protection Rating (VPR) of each SPD shall <u>not exceed</u> the following:

SYSTEM VOLTAGE	L-N	L-G	L-L	N-G
208Y/120	700V	700V	1200V	700V
480Y/277	1200V	1200V	1800V	1200V
480 DELTA	N/A	1200V	2000V	N/A
240 DELTA	N/A	1200V	1200V	N/A
120/240	700V	700V	1200V	700V

F. The Nominal Discharge Current (I_n) of the SPD shall be 20kA. Peak surge current ratings <u>shall not</u> be used as a basis for applying the SPD to the system.

The surge current rating for each SPD shall be as indicated on the Drawings. Surge current ratings are indicated in panel schedules. Surge current rating indicated is on a per phase basis.

G. Each SPD system shall provide surge protection in all possible modes. Surge protection shall be as follows:

SYSTEM CONFIGURATION	MODES OF PROTECTION	NUMBER OF MODES
3-Phase Wye	L-N, L-G, N-G	7
3-Phase Delta	L-L, L-G	6
3-Phase Impedance Grounded	L-L, L-G	6
Single-Phase	L-N, L-G, N-G	3

H. The SPD shall be furnished with an audible alarm and silence pushbutton, integral SPD status LEDs (one per phase), and a Form C dry contact for remote indication of alarm. A surge counter shall also be provided.

I. The SPD equipment shall be SPD Series by Eaton, SurgeLogic by the Square D Company, Tranquell by the General Electric Company, Siemens Energy and Automation Inc. equivalent, or equal.

PART 3 – EXECUTION

3.01 INSTALLATION

A. Panelboards shall be furnished and installed as shown on the Drawings and as recommended by the equipment manufacturer, and as required by NECA 407.

B. Panelboards shall be set true and plumb in locations as shown on the Drawings. The top of panelboard enclosure shall not exceed six (6) feet above finished floor elevation.

C. Enclosures shall not be fastened to concrete or masonry surfaces with wooden plugs. Appropriate cadmium plated or galvanized steel bolts shall be used with expansion shields or other metallic type concrete insert for mounting on concrete or solid masonry walls. Cadmium plated or galvanized steel toggle bolts shall be used for mounting on concrete block or other hollow masonry walls. Bolt diameter shall be as required considering the size and weight of the completed panelboard and enclosure to provide adequate structural support.

D. The Contractor shall not use factory furnished knockouts with surface mounted back boxes. The Contractor shall punch or drill required openings during installation and shall equip flush mounted back boxes with manufacturer's standard pattern of knockouts.

E. The Contractor shall install cabinets (and other enclosure products) in plumb with the building construction. Flush mounted enclosures shall be installed so that the trim will rest against the surrounding surface material and around the entire perimeter of the enclosure.

F. Bus loads in all panelboards shall be balanced between phases to within a tolerance of one (1) KVA. Convenience receptacles shall be distributed evenly among all phase buses as much as practical.

G. Prior to final completion of the work, all metal surfaces of the equipment shall be cleaned thoroughly, and all scratches and abrasions shall be retouched with the same lacquer as used for shop finishing coats.

3.02 TESTING

A. All tests shall be performed in accordance with the requirements of the General Conditions and Division 1. The following tests are required:

1. Field Tests

a. Prior to termination of any conductors to the circuit breakers, all bus work and circuit breakers shall be tested from phase to phase and phase to ground with a 1000 VDC megaohmeter for 1 minute in accordance with NECA 407. Resistance values shall be recorded and shall not be less than 100 megohms.

b. Prior to terminating any wires to the circuit breakers, the resistance of the connection between the bus work and each circuit breaker shall be tested through the use of a low-resistance ohmmeter. Record the resistance values for each circuit breaker.

- END OF SECTION -

SECTION 16476

ENCLOSED CIRCUIT BREAKERS

PART 1 – GENERAL

1.01 THE REQUIREMENT

A. The Contractor shall furnish and install enclosed circuit breakers of voltage and current ratings as specified herein and indicated on the Drawings.

B. This specification is intended to apply to circuit breakers separately mounted from other equipment in an individual enclosure. This Section does not apply to circuit breakers as part of an equipment assembly such as motor control centers, panelboards, switchboards, etc.

C. Reference Section 16000, Basic Electrical Requirements.

1.02 CODES AND STANDARDS

A. Enclosed circuit breakers shall comply with the following codes and standards:

1. UL 489 - Molded Case Circuit Breakers, Molded Case Switches, and Circuit Breaker Enclosures

2. NEMA 250 – Enclosures for Electrical Equipment

3. National Electrical Code

1.03 SUBMITTALS

A. In accordance with the procedures and requirements set forth in the General Conditions and Section 01300, Submittals, the Contractor shall obtain from the equipment manufacturer and submit the following:

1. Shop Drawings.

2. Spare Parts List.

3. Operation and Maintenance Manuals.

B. Each submittal shall be identified by the applicable specification section.

1.04 SHOP DRAWINGS

A. Each submittal shall be complete in all respects, incorporating all information and data listed herein and all additional information required for evaluation of the proposed equipment's compliance with the Contract Documents.

B. Partial, incomplete, or illegible submittals will be returned to the Contractor without review for resubmittal.

C. Shop drawings shall include but not be limited to:

1. Product data sheets.

2. Complete assembly, layout, and installation drawings with clearly marked dimensions for each enclosed circuit breaker.

1.05 SPARE PARTS

A. For each enclosed circuit breaker, the Contractor shall furnish to the City all spare parts as recommended by the equipment manufacturer.

1.06 IDENTIFICATION

A. Each enclosed circuit breaker shall be identified with the identification name and/or number indicated on the Drawings. A nameplate shall be securely affixed in a conspicuous place on the front of each enclosed circuit breaker. Nameplates shall be as specified in Section 16195, Electrical - Identification.

PART 2 – PRODUCTS

2.01 MANUFACTURERS

A. The Equipment shall be designed, constructed and installed in accordance with the best practices of the trade, and shall operate satisfactorily when installed as shown on the Drawings.

B. Enclosed circuit breakers shall be manufactured by Eaton, the General Electric Company, the Square D Company, or Siemens Energy and Automation, Inc.

2.02 ENCLOSED CIRCUIT BREAKERS

A. Circuit breakers shall be molded case type with trip and frame ratings as indicated on the Drawings. Provide electronic trip unit where indicated on the Drawings, with adjustable functions as indicated on the Drawings.

B. Circuit breakers shall have an interrupting rating of 65,000 amperes symmetrical at 480 VAC, unless otherwise indicated on the Drawings.

C. Enclosed circuit breakers in non-hazardous locations shall be UL 489 Listed.

D. In non-hazardous locations, enclosed circuit breakers shall be furnished with the following enclosure type and material of construction, dependent upon the designation of the area in which they are to be installed. Area designations are indicated on the Drawings.

AREA DESIGNATION	ENCLOSURE TYPE AND MATERIAL
Indoor Dry Non-Process Area	NEMA 1, Painted Steel
All Outdoor Areas	NEMA 4X, Type 316 Stainless Steel

E. Enclosed circuit breakers shall be quick-make, quick-break and fitted with an interlocked cover which cannot be opened when the breaker is in the “ON” position, except via defeater mechanism. Circuit breaker shall be capable of being locked in the “OPEN” position.

F. An Underwriter's Laboratories, Inc. inspection label shall appear on the interior of the enclosure.

G. Enclosed circuit breakers shall be suitable for use as service entrance equipment where indicated on the Drawings and so labeled to suit the application.

H. Where indicated on the Drawings, enclosed circuit breakers shall be 100% rated.

PART 3 – EXECUTION

3.01 INSTALLATION

A. The enclosed circuit breaker shall be furnished and installed as shown on the Drawings and as recommended by the equipment manufacturer.

B. Enclosed circuit breakers shall be set true and plumb in locations as shown on the Drawings. The top of enclosure shall not exceed six (6) feet above finished floor elevation.

C. Enclosed circuit breakers shall be provided in the enclosure type and material of construction required for the area in which it is installed. Reference the requirements in Part 2 herein, and the area designations indicated on the Drawings.

3.02 TESTING

A. All tests shall be performed in accordance with the requirements of the General Conditions and Division 1. The following tests are required:

1. Witnessed Shop Tests

   a. None required

2. Field Tests

   a. Field testing shall be done in accordance with the requirements specified in the General Conditions, Division 1, and NETA Acceptance Testing Specifications, latest edition.

- END OF SECTION -

SECTION 16480

LOW VOLTAGE ELECTRIC MOTORS

PART 1 – GENERAL

1.01 THE REQUIREMENT

A. The Contractor shall furnish all labor, materials, tools and equipment necessary for furnishing, installing, connecting, testing and placing into satisfactory operation all low voltage electric motors as shown on the Drawings and specified herein. All motors required for this Contract shall comply with this Section, however, any deviations from this specification shall take precedence wherever they occur in the motor-driven equipment specifications.

1.02 SUBMITTALS

A. In accordance with the procedures and requirements set forth in the General Conditions and Section 01300, Submittals, the Contractor shall obtain from the equipment manufacturer and submit the following:

1. Shop Drawings.

2. Spare Parts List.

3. Special Tools List.

B. Each submittal shall be identified by the applicable specification section.

1.03 SHOP DRAWINGS

A. Each submittal shall be complete in all respects, incorporating all information and data listed herein and all additional information required for evaluation of the proposed equipment's compliance with the Contract Documents.

B. Partial, incomplete or illegible submittals will be returned to the Contractor without review for resubmittal.

C. Individual shop drawings for electric motors shall be submitted in accordance with the procedures and requirements set forth in the General Conditions and Section 01300, Submittals, unless submitted as a part of the shop drawings for the driven equipment.

D. Shop drawings for electric motors shall include motor data sheets, dimensioned drawings, wiring diagrams (space heaters, temperature devices, etc.) identifying electric characteristics and design, mechanical construction, manufacturer's name, type and pertinent specifications for the use intended, along with the name of the equipment to be driven. For motors rated 50 horsepower or more, submittal of motor data for acceptance shall include, as a minimum, the following:

a. Manufacturer's type and frame designation

b. Horsepower rating

c. Time rating (per NEMA Standards)

d. Ambient temperature rating

e. Insulation system designation

f. RPM at rated load

g. Frequency

h. Number of phases

i. Rated-load amperes

j. Voltage

k. Code letter (starting KVA per horsepower)

l. Design letter for integral horsepower induction motors (per NEMA Standards)

m. Service factor

n. Temperature rise at full load and at service factor load

o. Efficiency at 1/4, 1/2, 3/4 and full load

p. Power factor at 1/4, 1/2, 3/4 and full load

q. Motor outline, dimensions and weight

r. Insulation system description

s. Horsepower required by connected machine at specified conditions (load curves) shall be supplied for all compressors, propeller and positive displacement pumps.

The foregoing data shall also be verified after manufacture and shall be included with the information to be furnished in the operation and maintenance manuals specified.

E. The shop drawing information shall be complete and organized in such a way that the Engineer can determine if the requirements of these Specifications are being met. Copies of technical bulletins, technical data sheets from "soft-cover" catalogs, and similar information which is "highlighted" or somehow identifies the specific equipment items the Contractor intends to provide are acceptable and shall be submitted.

PART 2 -- PRODUCTS

2.01 MANUFACTURERS

A. The equipment covered by this Specification is intended to be standard equipment of proven performance as manufactured by reputable concerns. Equipment shall be

designed, constructed and installed in accordance with the best practices of the trade, and shall operate satisfactorily when installed as shown on the Drawings.

B. Electric motors shall be manufactured by Baldor/Reliance Electric Company; Nidec Motors; Toshiba Industrial and Power Systems, Inc.; Siemens Energy & Automation, Inc.; General Electric Company; or equal.

2.02 MATERIALS AND CONSTRUCTION

A. Motors shall be built in accordance with the latest standards of NEMA, including, but not limited to MG-1 and MG-2, IEEE, ANSI and to the requirements specified herein.

B. Type

1. Unless otherwise noted, motors specified herein shall be polyphase squirrel cage, NEMA Design B, or single-phase capacitor or repulsion start induction motors. Special equipment requiring a motor drive with unusual characteristics shall be equipped with a definite purpose motor to meet the necessary requirements.

2. Unless otherwise shown or specified, all motors 1/2 horsepower or larger shall be three-phase, 60 Hertz, NEMA Design B, squirrel cage induction motors designed for operation at 208 or 480 volts as specified herein or as indicated in the driven equipment specification.

3. Unless otherwise specified in the driven equipment specification, or as required by the dynamic characteristics of the load as determined by the manufacturer of the machine to be driven, all polyphase squirrel cage motors shall have torque and locked rotor current characteristics as specified for NEMA Design B motors.

4. All motors 2 horsepower and smaller shall have windings encapsulated with a flexible epoxy compound, or insulated with a flexible epoxy compound, or insulated with the manufacturer's premium quality system which shall be subject to acceptance by the Engineer.

5. All motors above 2 horsepower shall have stator windings vacuum impregnated with a polyester insulation compound.

6. Unless otherwise noted, all motors smaller than 1/2 horsepower shall be standard single-phase capacitor start or repulsion start induction type designed for operation on 120 volts or 208 volts, 60 Hz alternating current. Small fan motors less than 1/4 HP may be split-phase or shaded pole type. Shaded pole motors rated more than 1/4 horsepower will not be approved. Fractional horsepower motors shall be completely equipped with all necessary auxiliary components for starting and be labeled as "Thermally Protected". Insulation shall be Class F with Class B rise, except that submersible motors shall have epoxy encapsulation. Unless otherwise noted, the motors shall be totally enclosed. Small fan motors may be of the open type where they are suitably protected from moisture dripping and lint accumulation. Motors shall be provided with sealed ball bearings lubricated for 10 years normal use.

7. Where specified, vertical hollowshaft motors shall be designed to carry the motors', pumps', and associated equipment's full thrust. The motors shall be equipped with grease lubricated spherical roller thrust bearings and lower radial guide bearings. Vertical hollowshaft motors shall be fitted with nonreversing ratchet assemblies where specified. Vertical adjustment shall be provided by means of a lockable nut at the top of the shaft.

8. Vertical hollowshaft motors shall have adequate thrust bearings to carry all motor loads and any other operating equipment loads. Horizontal motors shall not be installed where subjected to external thrust loads.

C. Rating

1. Each motor shall develop ample torque for its required service through its acceleration range and throughout its rated load range. The rating of the motors offered shall, in no case, be less than the horsepower shown on the Drawings or elsewhere specified. It should be noted that the motor sizes indicated on the Drawings or as otherwise specified herein, are motor sizes required to operate the specific equipment which is specified. Higher rated motor sizes may be determined from the actual equipment submitted, approved, purchased, and installed. Overload protection, starters, disconnect switches, and other necessary equipment shall be furnished and installed for the actual motor sizes required at no additional cost.

2. Motor ratings shall be based on continuous operation in an ambient temperature of 40 deg C. The maximum temperature rise for open and drip proof type motors shall not exceed 90 degrees C, and for totally enclosed type motors shall not exceed 80 degrees C.

D. Insulation

1. Insulation shall be as specified for each particular type or class of motor. The insulation system shall provide a high dielectric strength, long life covering for the windings which may be required to operate in a continually damp and chemically contaminated environment. The insulation shall be tropicalized, resistant to attack by moisture, fungus, acids, alkalis, abrasives, and mechanical and thermal shock. Leads shall be sealed with a non-wicking, non-hydroscopic insulation material.

2. Motor insulation resistance may be checked at any time after delivery to the job site or during the warranty period. Encapsulated motor stators may be subjected to insulation testing while completely submerged in water. Any motor not meeting the requirements specified herein will be rejected and shall be promptly replaced at no cost to the City.

3. The locked rotor KVA/HP input at full voltage for 10 horsepower motors and larger shall not exceed that permitted for Code Letter "J", except for specialized equipment requiring a motor drive with special definite characteristics.

4. Unless otherwise specified, non-inverter duty motors shall be furnished with a Class F insulation system. Unless otherwise specified, inverter duty motors shall

be furnished with a Class H insulation system. In either case, temperature rise shall be limited to that for Class B insulation. Output torque and speed characteristics of each motor shall be suitable to operate the driven equipment through the full range of acceleration and operating load conditions without exceeding the nameplates current rating, and/or temperature rise.

E. Nameplates

1. The motor manufacturer's nameplates shall be engraved or stamped on stainless steel and fastened to the motor frame with No. 4 or larger oval head stainless steel screws or drive pins. Nameplates shall include as a minimum, items a through m as listed in Article 1.03 in addition to that required by NEMA standards. The nameplate shall be positioned so as to be readily visible for inspection in the assembled machine.

F. Design

1. Motors shall be designed to accelerate and drive the connected equipment under all normal operating conditions without exceeding nameplate ratings.

2. Motors specified for operation with variable frequency drives shall be inverter duty and shall be designed to output 100 percent of nameplate horsepower under continuous duty service without exceeding the temperature rise specified herein when controlled by the actual drives furnished. Inverter duty motors shall be designed to operate down to 10% of full load speed without the need for a line powered cooling fan.

3. Unless otherwise specified, electric motors shall be furnished with service factors in accordance with NEMA MG-1 as follows:

Type of Motor	**Service Factor**
Non-inverter Duty	1.15
Inverter Duty	1.0

4. Design selection with respect to the driven machine shall be such that the requirements do not exceed 85 percent of the motors' maximum rating modified by service factor, ambient temperature, enclosure, altitude and electrical service. The electrical service conditions shall be assumed to be 10 percent undervoltage, 5 percent underfrequency, and 3 percent voltage unbalance. Altitude shall be assumed to be the project site elevation plus 10 percent. Ambient temperature shall be assumed to be 104 degrees F (40 degrees C) in interior and exterior locations, and 122 degrees F (50 degrees C) within housings or enclosures; except where higher temperatures may be encountered within or on individual items of equipment. The applicable paragraphs of NEMA MG-1 shall be used in making the design selection.

5. Motors used with belt drives shall have sliding bases to provide for belt take up.

6. Terminal boxes shall be oversized, and of sufficient size to accommodate the required quantity and size of conduits. Gasketed terminal boxes shall be furnished with all splash-proof and totally enclosed motors. NEMA ratings of the terminal boxes shall be suited for the application. Terminal boxes shall be sized to accommodate accessory equipment such as motor differential current transformers.

7. Terminal boxes for horizontal motors shall be located on the left-hand side when viewing the motor from the drive shaft end and shall be so designed that conduit entrance can be made from above, below, or either side of the terminal box. For installations at existing facilities, coordinate terminal box locations as required to match existing conduit locations.

8. Motors larger than 250hp shall be manufactured with the six stator coil leads wired to the motor junction box for application in a differential relay scheme. Current transformers shall be provided by the motor manufacturer and installed in the factory. All ground connections and current transformer connections shall be made in the factory.

G. Construction

1. Frames, mounting means, and shafts shall meet NEMA Standards for the horsepower, RPM, and enclosure selected. Enclosures shall be selected according to the degree of mechanical protection required and shall not be of aluminum construction. All motors shall have a manufacturer's standard shop machinery finish, consisting of a rust-resisting priming coat of zinc chromate and a finish coat of alkyd machinery enamel. Reference Section 09900, Painting.

2. Motors shall have cast iron frames and a heavy gauge steel terminal box, with neoprene gaskets between the frame and the box and between the box and its cover. A grounding lug(s) shall be provided inside the terminal box.

3. Motors weighing more than 50 pounds shall be equipped with at least one lifting eye. All lifting hardware shall be corrosion resistant.

4. When located outdoors, or elsewhere if specified, motors shall be totally enclosed, non-ventilated (TENV) or totally enclosed, fan-cooled (TEFC) machines, unless otherwise noted. Totally enclosed motors shall be provided with two (2) 1/4 inch drain holes drilled through the bottom of the frame, which allows complete drainage of the frame. Where specified, TEFC motors controlled by a variable frequency drive shall be provided with a separately powered cooling fan motor that runs at 60HZ to ensure proper cooling of the motor at low speeds. Cooling fan motor shall be suitable for 120VAC, single phase operation.

5. Unless otherwise specified in the equipment specifications, motors rated 100 horsepower or greater located outdoors, in unheated structures, in below grade areas, or as otherwise indicated, shall be furnished with space heaters and embedded motor winding high temperature switches with leads brought out to the motor terminal box. Space heaters shall be suitable for 120VAC operation and for a maximum surface temperature of less than 200 degrees C. Space heaters shall be of sufficient wattage to maintain the internal temperature of the motor at

approximately 5 degrees C above the ambient temperature when the motor is not running.

Embedded motor winding temperature switches shall operate at temperatures well below the temperature rating of the motor winding insulation system. Motor winding temperature switches are not required where other temperature monitoring devices (e.g. RTD's) are specified.

6. Unless otherwise specified in the equipment specifications, motors rated 200HP or greater that are controlled by a VFD shall be furnished with resistance thermal detectors (RTD's) embedded in the stator windings, two per phase. RTD's shall be pre-wired to terminal blocks located in a separate terminal box as specified herein.

7. Unless otherwise specified in the equipment specifications, motors rated less than 200HP that are controlled by a VFD shall be furnished with motor winding high temperature switches embedded in the stator windings with the leads brought out to the motor terminal box.

8. If so specified and when located in indoor areas which are heated and weatherproof, motors shall be open drip-proof machines. Ventilation openings shall be arranged to prevent the entrance of drops of liquid or solid particles at any angle from zero to 15 degrees downward from vertical.

9. Unless otherwise specified, or required, motors rated less than 200 horsepower shall be furnished with bearings of the grease lubricated, antifriction ball type with conveniently located grease fittings and drain plugs. A means of preventing bearings from becoming overgreased shall be provided. Bearings shall have a minimum B-10 life of 20,000 hours.

10. Rotors shall be statically and dynamically balanced. Rotor windings shall be one-piece cast aluminum. Where applicable, rotors shall be constructed with integral fins.

H. Power Factor and Efficiency

1. All motors, including vertical hollowshaft motors, in the range of 1-500 horsepower, inclusive, shall be designed specifically for energy efficiency and high-power factor. The motor efficiency and power factor shall meet or exceed the values listed in the table below when the motors are tested in accordance with the NEMA preferred test method IEEE 112A, Method B, Dynamometer. Each motor shall meet the minimum guaranteed efficiency value indicated in the tables below. All tests shall be performed in accordance with the procedures contained in NEMA Standard MG1-12.58.

TABLE 12-11
FULL-LOAD EFFICIENCIES OF ENERGY EFFICIENT MOTORS
ENCLOSED MOTORS

HP	2-POLE		4-POLE		6-POLE		8-POLE	
	Nominal Efficiency	Minimum Efficiency	Nominal Efficiency	Minimum Efficiency	Nominal Efficiency	Minimum Efficiency	Nominal Efficiency	Minimum Efficiency
1	75.5	72	82.5	80	80	77	74	70
1.5	82.5	80	84	81.5	85.5	82.5	77	74
2	84	81.5	84	81.5	86.5	84	82.5	80
3	85.5	82.5	87.5	85.5	87.5	85.5	84	81.5
5	87.5	85.5	87.5	85.5	87.5	85.5	85.5	82.5
7.5	88.5	86.5	89.5	87.5	89.5	87.5	85.5	82.5
10	89.5	87.5	89.5	87.5	89.5	87.5	88.5	86.5
15	90.2	88.5	91	89.5	90.2	88.5	88.5	86.5
20	90.2	88.5	91	89.5	90.2	88.5	89.5	87.5
25	91	89.5	92.4	91	91.7	90.2	89.5	87.5
30	91	89.5	92.4	91	91.7	90.2	91	89.5
40	91.7	90.2	93	91.7	93	91.7	91	89.5
50	92.4	91	93	91.7	93	91.7	91.7	90.2
60	93	91.7	93.6	92.4	93.6	92.4	91.7	90.2
75	93	91.7	94.1	93	93.6	92.4	93	91.7
100	93.6	92.4	94.5	93.6	94.1	93	93	91.7
125	94.5	93.6	94.5	93.6	94.1	93	93.6	92.4
150	94.5	93.6	95	94.1	95	94.1	93.6	92.4
200	95	94.1	95	94.1	95	94.1	94.1	93
250	95.4	94.5	95	94.1	95	94.1	94.5	93.6
300	95.4	94.5	95.4	94s.5	95	94.1		
350	95.4	94.5	95.4	94.5	95	94.1		
400	95.4	94.5	95.4	94.5				
450	95.4	94.5	95.4	94.5				
500	95.4	94.5	95.8	95				

TABLE 12-12
FULL-LOAD EFFICIENCIES FOR NEMA PREMIUM™ EFFICIENCY ELECTRIC MOTORS
RATED 600 VOLTS OR LESS (RANDOM WOUND)
OPEN MOTORS

HP	2-POLE		4-POLE		6-POLE	
	Nominal Efficiency	Minimum Efficiency	Nominal Efficiency	Minimum Efficiency	Nominal Efficiency	Minimum Efficiency
1	77	74	85.5	82.5	82.5	80
1.5	84	81.5	86.5	84	86.5	81.5
2	85.5	82.5	86.5	84	87.5	81.5
3	85.5	82.5	89.5	84	88.5	86.5
5	86.5	84	89.5	84	89.5	87.5
7.5	88.5	86.5	91	89.5	90.2	88.5
10	89.5	87.5	91.7	90.2	91.7	90.2
15	90.2	88.5	93	91.7	91.7	90.2
20	91	89.5	93	91.7	92.4	91
25	91.7	90.2	93.6	92.4	93	91.7
30	91.7	90.2	94.1	93	93.6	92.4
40	92.4	91	94.1	93	94.1	93
50	93	91.7	94.5	93.6	94.1	93
60	93.6	92.4	95	94.1	94.5	93.6
75	93.6	92.4	95	94.1	94.5	93.6
100	93.6	92.4	95.4	94.5	95	94.1
125	94.1	93	95.4	94.5	95	94.1
150	94.1	93	95.8	95	95.4	94.5
200	95	94.1	95.8	95	95.4	94.5
250	95	94.1	95.8	95	95.4	94.5
300	95.4	94.5	95.8	95	95.4	94.5
350	95.4	94.5	95.8	95	95.4	94.5
400	95.8	95	95.8	95	95.8	95
450	95.8	95	96.2	95.4	96.2	95.4
500	95.8	95	96.2	95.4	96.2	95.4

NOTES:

(1) Motor data for continuous duty, NEMA Design B, 1.15 service factor, 40 degrees Celsius ambient, Class F insulation, 3 phase, 460 volt, at listed speed rating.

(2) TEFC efficiencies apply to both horizontal and vertical motors.

(3) Motors rated 50 horsepower or greater shall be individually tested at the factory before shipment, with a copy of test results provided for the Engineer, to assure compliance with the efficiency and power factor specifications.

I. Power Factor Correction

1. The power factor shall be corrected as necessary to achieve 85% (minimum) with capacitors sized and installed per manufacturer's recommendations. Capacitors shall be installed such that the motor shall not be damaged by overvoltage or excessive transient electrical torque. The capacitor(s) shall be connected as close as possible or directly to the motor terminals. Any power factor corrections shall not decrease the motor efficiency below the stated minimum requirement of this Specification. All power factor corrections shall be noted on the Shop Drawings submitted to the Engineer for approval. POWER FACTOR CORRECTION, TO ACHIEVE 85%, SHALL BE PROVIDED ON ALL MOTORS ABOVE 15 HORSEPOWER EXCEPT FOR THOSE MOTORS CONTROLLED BY VARIABLE FREQUENCY DRIVES (VFD'S).

2. When required, power factor correction capacitors shall be connected on the line side of <u>any</u> type of reduced voltage starting motor controller (e.g. RVAT, RVSS, Part-Winding, Wye-Delta, etc.). IN NO CASE SHALL POWER FACTOR CAPACITORS BE CONNECTED TO THE LOAD SIDE CIRCUIT OF A VARIABLE SPEED DRIVE OR REDUCED VOLTAGE SOLID STATE STARTER.

2.03 TOOLS, SUPPLIES AND SPARE PARTS

A. Each motor shall be furnished with all special tools necessary to disassemble, service, repair, and adjust the equipment. All spare parts as recommended by the equipment manufacturer shall be furnished to the City by the Contractor.

<u>PART 3 – EXECUTION</u>

3.01 INSTALLATION

A. Motors shall be installed as shown on the Drawings and in accordance with the manufacturer's installation instructions.

3.02 DELIVERY, STORAGE, AND HANDLING

A. Motors shall be properly protected from weather hazards. Motors shall not be allowed to be wrapped tightly in plastic while outdoors. Motors delivered to the site which will not be put in service for a time in excess of 30 calendar days, whether in storage or installed, shall have the shafts rotated a minimum of five (5) rotations every 30 days.

B. Motors provided with space heaters shall have temporary power applied to the heaters no later than 30 calendar days after delivery to the site until permanent power can be applied to the heaters.

C. Motors that, in the opinion of the Engineer, have not been properly protected shall be inspected by the manufacturer's representative. Any required corrections for testing shall be made at the Contractor's expense prior to acceptance and/or use.

D. All motors shall operate without any undue noise or vibration and shall show no signs of phase unbalance.

3.03 TESTING

A. All tests shall be performed in accordance with the requirements of the General Conditions and Division 1. The following tests are required:

1. Witnessed Shop Tests

a. All motors shall be shop tested and inspected in accordance with the equipment manufacturer's standard procedures. The manufacturer's testing and inspection procedures shall demonstrate that the equipment tested conforms to the requirements specified, all other applicable requirements, and shall be approved by the Engineer. At least 10 days notice shall be given the Engineer prior to tests and inspection dates.

b. In addition to the efficiency and power factor testing specified herein, each motor shall be tested to determine compliance with the applicable requirements of the IEEE, ANSI and NEMA. Tests shall be as follows:

(1) Motors less than 50 HP

(a) Each motor shall be subjected to a standard, short commercial test including the following:

i) Running current, no load
ii) Locked rotor current
iii) High potential
iv) Winding resistance
v) Bearing inspection

(2) Motors between 50 and 100 HP

(a) Each motor shall be subjected to the above tests and shall be furnished with certified test results.

(3) Motors larger than 100 HP

(a) Each motor shall be furnished with certified test results. Each motor shall be subjected to a complete test consisting of full load heat run, percent slip, running load current, locked rotor current, breakdown torque (calculated), starting torque, winding resistance, high potential, secondary current and voltage at collector rings (wound rotor), efficiencies at 100, 75 and 50 percent of full load, power factors at 100, 75 and 50 percent of full load and bearing inspection. Tests will be witnessed by the Engineer where specifically indicated.

(4) Test Reports

(a) All test results for motors over 100 horsepower shall be submitted to the Engineer for approval. Copies of witnessed test raw data shall be submitted to the Engineer immediately upon completion of such tests.

2. Field Tests

a. Field tests shall be performed in accordance with the requirements specified in the General Conditions, Division 1, and Section 16000, Basic Electrical Requirements.

b. All electric motors furnished for this project one (1) horsepower or larger shall have the information required in the following tabulation completed. See Exhibit "A" on following page.

c. All field testing shall be witnessed by the Engineer.

(Continued on Next Page)

(EXHIBIT A)

MOTOR TEST RECORD					
Motor Identification Remarks	Location	Specified Horsepower	Nameplate Horsepower	Nameplate Amperage (FLA)	Measured Amperage Under Normal Operating Conditions

- END OF SECTION -

SECTION 16481

INDIVIDUAL MOTOR CONTROLLERS

PART 1 – GENERAL

1.01 THE REQUIREMENT

A. The Contractor shall furnish and install separately mounted, individual motor controllers for 120-volt single phase, and 208 and 480 volt three phase motors as specified herein and indicated on the Drawings. Individual motor controllers specified in this Section include magnetic motor starters, manual motor starters, and reduced voltage solid state starters (RVSS).

B. Reference Section 16000, Basic Electrical Requirements; Section 16123, Low Voltage Cable; Section 16195, Electrical Identification; and Section 16902, Electric Controls and Relays.

1.02 CODES AND STANDARDS

A. Individual motor controllers shall be designed, manufactured, and/or listed to the following standards as applicable:

1. UL 508 – Standard for Industrial Control Panels
2. NEMA 250 – Enclosures for Electrical Equipment

1.03 SUBMITTALS

A. In accordance with the procedures and requirements set forth in the General Conditions and Section 01300, Submittals, the Contractor shall obtain from the equipment manufacturer and submit the following:

1. Shop Drawings.
2. Spare Parts.
3. Reports of Certified Shop and Field Tests.
4. Operation and Maintenance Manuals.
5. Manufacturer's Field Startup Report.
6. Manufacturer's Representatives Installation Certification.

B. Each submittal shall be identified by the applicable specification section.

1.04 SHOP DRAWINGS

A. Each submittal shall be complete in all respects, incorporating all information and data listed herein and all additional information required for evaluation of the proposed equipment's compliance with the Contract Documents.

B. Partial, incomplete, or illegible submittals will be returned to the Contractor without review for resubmittal.

C. Shop drawings shall include but not be limited to:

1. A Compliance, Deviations, and Exceptions (CD&E) letter. If the shop drawings are submitted without this CD&E letter, the submittal will be rejected. The letter shall include all comments, deviations and exceptions taken to the Drawings and Specifications by the Contractor AND Equipment Manufacturer/Supplier. This letter shall include a copy of this specification section. In the left margin beside each and every paragraph/item, a letter "C", "D", or "E" shall be typed or written in. The letter "C" shall be for full compliance with the requirement. The letter "D" shall be for a deviation from the requirement. The letter "E" shall be for taking exception to a requirement. Any requirements with the letter "D" or "E" beside them shall be provided with a full typewritten explanation of the deviation/exception. Handwritten explanation of the deviations/exceptions is not acceptable. The CD&E letter shall also address deviations, and exceptions taken to each Drawing related to this Specification Section.

2. Product data sheets.

3. Complete layout and installation drawings with clearly marked dimensions for each type/size/rating of individual motor controller. For RVSS starters, in free-standing enclosures, show conduit stub-up area locations on the Drawings.

4. Custom wiring diagrams for each individual motor controller. Standard wiring diagrams that are not custom created by the manufacturer for the individual motor controllers for this project are not acceptable. One wiring diagram which is typical for an equipment group (e.g. reuse water pump) is not acceptable. Each wiring diagram shall include wire identification and terminal numbers. Indicate all devices, regardless of their physical location, on the diagrams. Identify on each respective wiring diagram specific equipment names and equipment numbers consistent with those indicated on the Drawings.

5. Bill of material list for each individual motor controller.

6. Nameplate schedule for each individual motor controller.

7. Manufacturer’s installation instructions.

8. Time-current curves for each type and size protective device if requested by the Engineer.

9. Approximate total shipping weight of each RVSS.

D. The shop drawing information shall be complete and organized in such a way that the Engineer can determine if the requirements of these Specifications are being met. Copies of technical bulletins, technical data sheets from "soft-cover" catalogs, and similar information which is "highlighted" or somehow identifies the specific equipment items that the Contractor intends to provide are acceptable and shall be submitted.

E. Prior to completion and final acceptance of the project, the Contractor shall furnish and install "as-built" wiring diagrams for individual motor controller. These final drawings shall

be plastic laminated and securely placed inside each individual motor controller unit door and included in the O&M manuals.

1.05 OPERATION AND MAINTENANCE MANUALS

A. The Contractor shall submit operation and maintenance manuals in accordance with the procedures and requirements set forth in the General Conditions and Division 1.

1.06 SPARE PARTS

A. All spare parts as recommended by the equipment manufacturer shall be furnished to the City by the Contractor. The Contractor shall furnish the following additional spare parts:

1. One (1) solid state overload relay for each type, size, and rating used.

2. One (1) motor circuit protector & motor contactor for each type, size, and rating used.

3. One (1) spare control power transformer for each type and size used.

4. Two (2) spare fuses for each size and type used.

B. The spare parts shall be packed in containers suitable for long term storage, bearing labels clearly designating the contents and the pieces of equipment for which they are intended.

C. Spare parts shall be delivered at the same time as the equipment to which they pertain. The Contractor shall properly store and safeguard such spare parts until completion of the work, at which time they shall be delivered to the City.

D. Spare parts lists, included with the shop drawing submittal, shall indicate specific sizes, quantities, and part numbers of the items to be furnished. Terms such as "1 lot of packing material" are not acceptable.

E. Parts shall be completely identified with a numerical system to facilitate parts inventory control and stocking. Each part shall be properly identified by a separate number. Those parts which are identical for more than one size, shall have the same parts number.

1.07 IDENTIFICATION

A. Each equipment item shall be identified with a nameplate. The nameplate shall be engraved with the equipment name and/or number with which it is associated. Equipment identification shall be in accordance with Section 16195, Electrical - Identification.

PART 2 – PRODUCTS

2.01 MANUFACTURERS

A. The equipment covered by this Specification is intended to be standard equipment of proven performance as manufactured by reputable concerns. Equipment shall be

designed, constructed and installed in accordance with the best practices of the trade, and shall operate satisfactorily when installed as shown on the Drawings.

2.02 INDIVIDUAL MAGNETIC MOTOR STARTERS

A. Individual magnetic motor starters shall be combination type complete with motor circuit protectors (MCP's). Starters shall be rated 480 VAC, 3-pole, sized for the intended load unless otherwise indicated. In no case shall a starter smaller than a NEMA Size 1 be used. Each starter shall be furnished with a minimum of two spare auxiliary contacts.

B. In non-hazardous locations, motor starters shall be furnished with the following enclosure type and material of construction, dependent upon the designation of the area in which they are to be installed. Area designations are indicated on the Drawings.

AREA DESIGNATION	**ENCLOSURE TYPE AND MATERIAL**
Indoor Dry Non-Process Area	NEMA 1, Painted Steel
All Outdoor Areas	NEMA 4X, Type 316 Stainless Steel

C. Starters shall be provided with all coils and controls for 120 VAC operation, unless otherwise indicated on the Drawings.

D. The motor controller manufacturer shall review the total Contract Documents for additional requirements for space heaters, power factor correction capacitors, and similar equipment which may not be specified in this Division or shown on the Drawings. Control power transformers shall be protected on both the primary and secondary sides. The minimum control power transformer VA requirements are as shown below. Control power transformers shall be sized as required for the connected loads, plus 25% spare capacity.

Size 1-150 VA
Size 2-150 VA
Size 3-200 VA
Size 4-300 VA
Size 5-500 VA

E. Each starter shall be supplied with a manual reset overload relay. Manual reset shall be accomplished by a door mounted overload reset pushbutton. The relays shall be solid state type, with at least one isolated normally open and one isolated normally closed auxiliary contact that operates when a trip condition has occurred. Relays shall be self-powered, have a visible trip indicator, have a trip test function, and have selectable Class 10 or 20 operation. Overload relays shall be set for Class 10 operation unless otherwise directed by the Engineer. Overload relay shall have phase loss protection built in to trip the unit and protect the motor against single phasing. The Contractor shall provide the overload relay model with the correct current range for each application. Overload relay shall have adjustable current range dial. Eutectic alloy and bi-metallic type overload relays are not acceptable.

F. Control Devices

1. Furnish and install control devices as required and/or shown on the Drawings. The following control devices shall be provided as specified in Section 16902, Electric Controls and Relays:

   a. Pilot devices (switches, indicating lights, etc.)

   b. Relays and timers

   c. Control Terminal blocks

G. All control wiring shall be No. 14 AWG (minimum) labeled at each end in accordance with the wiring numbers shown on the accepted shop drawings. Power wiring shall be sized to suit the maximum horsepower rating of unit; No. 12 AWG (minimum). Wiring shall be type MTW rated for 105ºC. Wire color coding shall be as specified in Section 16123, Low Voltage Cable.

H. Each motor starter coil shall be equipped with a surge-suppression device for protection of the solid-state equipment (e.g. programmable logic controller) wired as part of the control circuit.

I. Individual magnetic motor starters shall be as manufactured by Eaton using NEMA rated Freedom Series starters and contactors, the General Electric Company equivalent, the Square D Company equivalent, or Siemens Energy & Automation, Inc. equivalent.

2.03 INDIVIDUAL MANUAL MOTOR STARTERS

A. Individual manual motor starters in enclosures as specified above shall be furnished and installed for outdoor and indoor exposed work. Furnish and install manual motor starters in outlet boxes with flush wall plates as required for concealed work.

B. Furnish and install manual motor starters with pilot lights and overload heater elements of correct rating based on motor nameplate data.

C. Manual motor starters shall be equipped with either a push button or toggle operator with reset device or mechanism accessible without opening the enclosure.

D. Individual manual motor starters for motors one (1) horsepower and less shall be Eaton Type MS, the General Electric Company equivalent, the Square D Company equivalent, Allen-Bradley equivalent, or Siemens Energy & Automation, Inc. equivalent.

E. Individual manual motor starters for integral horsepower motors shall be Eaton Type B100 or B101, the General Electric Company equivalents, the Square D Company equivalents, Allen-Bradley equivalent, or Siemens Energy and Automation, Inc. equivalents.

2.04 REDUCED VOLTAGE SOLID STATE STARTER

A. The solid-state reduced-voltage starter shall be UL Listed. The solid-state reduced-voltage starter shall be an integrated unit with power SCRs, logic board, an integral paralleling bypass contactor, and electronic overload relay enclosed in a single molded housing. The

starter shall meet all applicable requirements of this Section and other sections in this Division.

B. The RVSS shall be suitable for continuous operation at 115% of its continuous ampere rating. The Contractor is fully responsible for the review of the mechanical specifications to determine specified motor speed, horsepower and full load amperes. This information is available in the applicable mechanical specifications for each piece of equipment (e.g. backwash blower).

C. The RVSS shall be suitable for the following environmental conditions:

1. Operating Temperature: 0-50 degrees C

2. Humidity: 0-95 percent non-condensing.

3. Altitude: up to 3,300 feet.

D. The RVSS shall be suitable for operation on a 480 VAC, 3-phase, 60 Hertz system.

E. The SCR-based power section shall consist of six (6) back-to-back SCRs and shall be rated for a minimum peak inverse voltage rating of 1500 volts PIV. Units using triacs or SCR/diode combinations are not acceptable. Resistor/capacitor snubber networks shall be used to prevent false firing of SCRs due to dv/dt effects.

F. The paralleling run bypass contactor shall energize when the motor reaches full speed.

G. The starter shall be provided with electronic overload protection as standard and shall be based on an inverse time-current algorithm. Overload protection shall be capable of being disabled during ramp start for long acceleration loads via the device keypad. Overload protection shall be adjusted via the device keypad and shall have a motor full load ampere adjustment from 30 to 100% of the maximum continuous ampere rating of the starter. The starter shall have selectable overload class setting of 5, 10, 20 or 30 via the device keypad. The starter shall be capable of an electronic reset after a fault. Units using bimetal or eutectic alloy overload relays are not acceptable.

H. The starter shall provide protection against the following conditions:

1. Improper line-side phase rotation. The starter shall stop the motor load if a line-side phase rotation other than A-B-C exists.

2. Phase loss or unbalanced conditions. The starter shall stop the motor load if a 50% current differential between any two phases is encountered.

3. Motor stall conditions.

4. Motor jam conditions.

I. The starter shall be provided with a form C normally open (NO), normally closed (NC) contact that shall change state when a fault condition exists. The contacts shall be rated 60 VA (resistive load) and 20 VA (inductive load). In addition, an LED display on the device

keypad shall indicate the type of fault (Overtemp, Phase Loss, Jam, Stall, Phase Reversal, and Overload).

J. The starter shall be provided with an unpowered internal “Run” contact rated for 24VDC or 120 VAC operation.

K. The following control function adjustments on the device keypad shall be provided:

1. Selectable Torque Ramp Start or Current Limit Start

2. Adjustable Kick Start Time, 0-2 seconds

3. Adjustable Kick Start torque, 0-90%

4. Adjustable Ramp Start Time; 0.5-180 seconds

5. Adjustable Initial Starting Ramp Torque; 0-100%

6. Adjustable Smooth Stop Ramp Time; 0-60 seconds.

L. Enclosed units shall include a motor circuit protector (MCP) for short-circuit protection and quick disconnect means. If required, the unit shall include a 24 VDC power supply to be used as the primary control voltage source. A 120 VAC control power transformer, protected on both the primary and secondary sides, shall be provided as an additional control power source to power such devices as motor space heaters, solenoid valves, and similar control elements as required. Input and output isolation contactors shall be furnished as indicated on the Drawings.

M. Unless otherwise specified or indicated on the Drawings, the RVSS enclosure shall be dead-front, with front accessibility. The enclosure shall be designed for both bottom and top cable entry. The enclosure shall be designed so rear access is not required for operations, maintenance, and repair tasks. The doors shall have full length piano type hinges and shall be braced to prevent sag when fully open. Other enclosure requirements are:

1. Finish exterior of the enclosures in ANSI-61 gray enamel or furnish in a color to match the complete line-up of equipment as indicated on the Drawings and accepted by the Engineer.

2. **The Contractor shall reference the Drawings for maximum dimensions of the RVSSs.**

3. Enclosure shall be sized to include the pump protection relay as indicated in Specification 11105 – Submersible Axial Flow Pump, Propeller, and Mixed Flow. Coordinate with final approved shop drawings.

N. In non-hazardous locations, the RVSS shall be furnished with the following enclosure type and material of construction, dependent upon the designation of the area in which they are to be installed. Area designations are indicated on the Drawings.

AREA DESIGNATION	ENCLOSURE TYPE AND MATERIAL
Indoor Dry Non-Process Area	NEMA 1, Painted Steel
All Outdoor Areas	NEMA 3R, Painted Steel

O. The complete starter assembly shall be rated per UL 508 for a minimum withstand rating of 65kAIC rms. Starters enclosed in motor control centers shall be by the same manufacturer.

P. Control Devices

1. Furnish and install control devices as required and/or shown on the Drawings. The following control devices shall be provided as specified in Section 16902, Electric Controls and Relays:

   a. Pilot devices (switches, indicating lights, etc.)

   b. Relays and timers

   c. Control Terminal blocks

Q. The reduced voltage solid state starter shall be the SMC-50 with integral bypass as manufactured by Allen-Bradley or Eaton equivalent.

PART 3 – EXECUTION

3.01 INSTALLATION

A. All individual motor starters shall be installed as indicated on the Drawings and as recommended by the equipment manufacturer.

B. Individual motor starters shall be provided in the enclosure type and material of construction required for the area in which it is installed. Reference the requirements in Part 2 herein, and the area designations indicated on the Drawings.

3.02 TESTING

A. All tests shall be performed in accordance with the requirements of the General Conditions and Division 1. The following tests are required:

1. Witnessed Shop Tests

   a. None required.

2. Field Tests

   a. Field testing shall be done in accordance with the requirements specified in the General Conditions, Division 1, and NETA acceptance testing specifications, latest edition.

3.03 SERVICES OF MANUFACTURER'S REPRESENTATIVE

A. The Contractor shall provide the services of a qualified manufacturer's factory-trained technical representative who shall adequately supervise the installation and startup of the RVSS equipment furnished under this Contract. The manufacturer's representative shall certify in writing that the equipment has been installed in accordance with the manufacturer's recommendations. No further testing or equipment startup may take place until this certification is accepted by the City.

B. The manufacturer’s technical representative shall perform all startup and field acceptance testing as specified herein.

C. The Contractor shall provide training for the City’s personnel. Training shall be conducted by the manufacturer's factory-trained representative who shall instruct City’s personnel in operation and maintenance of all equipment provided under this Section. Training shall be provided for two (2) sessions of two (2) hours each. Training shall not take place until after the motor controllers have been installed and tested. Training shall be conducted at times coordinated with the City.

D. For each site, the services of the manufacturer's representative shall be provided for a period of not less than as follows:

1. One (1) trip of two (2) working days during installation of the motor controllers.

2. One (1) trip of two (2) working days to perform startup and field acceptance testing of the motor controllers.

3. One (1) trip of one (1) working day two (2) months before the warranty expiration to identify any issues to be corrected under warranty.

4. One (1) trip of one (1) working day to perform training as specified herein.

E. Any additional time required to achieve successful installation and operation shall be at the expense of the Contractor.

- END OF SECTION -

SECTION 16496

AUTOMATIC TRANSFER SWITCH

PART 1 – GENERAL

1.01 THE REQUIREMENT

A. The Contractor shall furnish, install, connect, test and place in satisfactory operation automatic transfer switches as specified herein and indicated in Drawings.

B. All devices and components of the automatic transfer switch shall be NEMA rated. IEC rated devices are unacceptable and shall be cause for rejection of the submittals/equipment.

1.02 TESTING

A. All tests shall be performed in accordance with the requirements of the General Conditions and Division 1. The following tests are required:

1. Witnessed Shop Tests

   a. Shall be made available at manufacturing facilities if requested.

2. Certified Shop Tests and Reports

   a. Automatic transfer switches shall be given routine factory tests. The factory tests shall demonstrate that the completed switches function correctly and that the required timing has been set. Certification of these settings shall be submitted to the Engineer upon request.

   b. Test procedures shall be in accordance with UL-1008. During the 3-cycle withstand tests, there shall be no contact welding or damage.

   c. The three cycle tests shall be performed without the use of current limiting fuses.

   d. Oscillograph traces across the main contacts shall verify that contact separation has not occurred and there is contact continuity across all phases after completion of the test.

   e. When conducting temperature rise tests in accordance with UL-1008, include post-endurance temperature rise tests to verify the ability of the transfer switch to carry full rated current after completing the overload and endurance tests.

   f. Manufacturer shall submit test reports upon request.

3. Field Tests

a. Field testing shall be done in accordance with the requirements specified in the General Conditions, Division 1, and Section 16000, Basic Electrical Requirements.

b. Prior to acceptance of the installation, load test the equipment with all available motor load, but do not exceed the generator's or automatic transfer switch's nameplate rating. Correct defects which become evident during this test.

1.03 SUBMITTALS

A. In accordance with the procedures and requirements set forth in the General Conditions and Section 01300, Submittals, the Contractor shall obtain from the equipment manufacturer and submit the following:

1. Shop Drawings

2. Operation and Maintenance Manuals

3. Spare Parts Lists

4. Special Tools List

5. Reports of certified shop tests shall be submitted which indicates a closing and withstand ampere rating as required based on short circuit study requirements. Rating shall be symmetrical, 3 cycles at 480 VAC.

6. Guarantee/Warranty Program

B. Each submittal shall be identified by the applicable specification section.

1.04 SHOP DRAWINGS

A. Each submittal shall be complete in all respects, incorporating all information and data listed herein and all additional information required for evaluation of the proposed equipment's compliance with the Contract Documents.

B. Partial, incomplete or illegible submittals will be returned to the Contractor for resubmittal without review.

C. Shop drawings for <u>each automatic transfer switch</u> shall include but not be limited to:

1. A Compliance, Deviations, and Exceptions (CD&E) letter. If the shop drawings are submitted without this CD&E letter, the submittal will be rejected. The letter shall include all comments, deviations and exceptions taken to the Drawings and Specifications by the Contractor AND Equipment Manufacturer/Supplier. This letter shall include a copy of this specification section. In the left margin beside each and every paragraph/item, a letter "C", "D", or "E" shall be typed or written in. The letter "C" shall be for full compliance with the requirement. The letter "D" shall

be for a deviation from the requirement. The letter "E" shall be for taking exception to a requirement. Any requirements with the letter "D" or "E" beside them shall be provided with a full typewritten explanation of the deviation/exception. Handwritten explanation of the deviations/exceptions is not acceptable. The CD&E letter shall also address deviations, and exceptions taken to each Drawing related to this Specification Section.

2. Product data sheets.

3. Complete assembly, layout, and installation drawings with clearly marked dimensions and conduit entrance locations.

4. Example equipment nameplate data sheet.

5. Complete internal schematic and interconnecting wiring diagrams.

6. Nameplate schedule.

7. Manufacturer's standard installation instructions.

8. Manufacturer's standard warranty.

D. The shop drawing information shall be complete and organized in such a way that the Engineer can determine if the requirements of these specifications are being met. Copies of technical bulletins, technical data sheets from "soft-cover" catalogs, and similar information which is "highlighted" or somehow identifies the specific equipment items the Contractor intends to provide are acceptable and shall be submitted.

E. Prior to completion and final acceptance of the project, the Contractor shall furnish and install "as-built" wiring diagrams for each automatic transfer switch. These final drawings shall be plastic laminated and securely placed inside each transfer switch and included in the O&M manuals.

1.05 OPERATION AND MAINTENANCE MANUALS

A. The Contractor shall submit operation and maintenance manuals in accordance with the procedures and requirements set forth in the General Conditions and Division 1.

1.06 TOOLS, SUPPLIES AND SPARE PARTS

A. The automatic transfer switches shall be furnished with all special tools necessary to disassemble, service, repair and adjust the equipment. All spare parts as recommended by the equipment manufacturer shall be furnished to the City by the Contractor.

B. The spare parts shall be packed in containers suitable for long term storage, bearing labels clearly designating the contents and the pieces of equipment for which they are intended.

C. Spare parts shall be delivered at the same time as the equipment to which they pertain. The Contractor shall properly store and safeguard such spare parts until completion of the work, at which time they shall be delivered to the City.

D. Spare parts lists, included with the shop drawing submittal, shall indicate specific sizes, quantities, and part numbers of the items to be furnished. Terms such as "1 lot of packing material" are not acceptable.

E. Parts shall be completely identified with a numerical system to facilitate parts inventory control and stocking. Each part shall be properly identified by a separate number. Those parts which are identical for more than one size, shall have the same parts number.

1.07 SERVICES OF MANUFACTURER'S REPRESENTATIVE

A. The Contractor shall provide the services of a qualified manufacturer's technical representative who shall adequately supervise the installation and testing of all equipment furnished under this Contract and instruct the Contractor's personnel and the City's operating personnel in its maintenance and operation as outlined elsewhere in Division 1 and Section 11000, Equipment - General Provisions. The services of the manufacturer's representative shall be provided for a period of not less than as follows:

1. One trip of one (1) working day during installation of the equipment for <u>each</u> automatic transfer switch.

2. One trip of one (1) working day after acceptance of the equipment.

3. One trip of one (1) working day during the warranty period.

B. Any additional time required to achieve successful installation and operation shall be at the expense of the Contractor. The manufacturer's representative shall sign in and out at the office of the Engineer's Field Representative on each day he is at the project.

C. The manufacturer shall have an established network of service centers capable of servicing the specified equipment. The manufacturer shall have a service center within 100 miles of the project site which shall stock parts necessary to service the switch. The manufacturer shall include an 800 telephone number for a field service contact affixed to each enclosure.

D. Service center personnel shall be on call 24 hours a day, 365 days a year. Personnel shall be factory-trained and certified in the maintenance and repair of the specified equipment.

E. After-warranty service contracts shall be made available to the City by the manufacturer, through the service centers, to provide periodic maintenance and/or repair of the specified equipment.

1.08 IDENTIFICATION

A. Each automatic transfer switch shall be identified with the identification number indicated on the Drawings (e.g. ATS-1, ATS-2, etc.). A nameplate shall be securely affixed in a conspicuous place on each switch. Nameplates shall be as specified in Section 16195, Electrical - Identification.

1.09 TRAINING

A. The Contractor shall provide training for City personnel. Training shall be conducted by the manufacturer's factory trained specialists who shall instruct City personnel in operation and maintenance of all equipment provided under this Section. Training shall be in accordance with the requirements of Section 11000, Equipment-General Provisions.

B. Provide the services of an experienced, factory trained technician or service engineer of the switch manufacturer at the jobsite for minimum of one (1) day for training of City personnel, beginning at a date mutually agreeable to the Contractor and the City. The technician shall be on duty at the site for at least 8 hours per day and shall be available 24 hours per day when required to advise concerning special problems with equipment and systems.

1.10 WARRANTY

A. The manufacturer shall warrant each automatic transfer switch for a minimum of five (5) years from date of shipment. In addition, the manufacturer shall repair or replace equipment found faulty under the terms of the warranty. The manufacturer shall submit data outlining the guarantee/warranty program.

PART 2 – PRODUCTS

2.01 MANUFACTURERS

A. The equipment covered by this Specification is intended to be standard equipment of proven performance as manufactured by reputable concerns. Equipment shall be designed, constructed and installed in accordance with the best practices of the trade, and shall operate satisfactorily when installed as shown on the Drawings.

B. The equipment described herein, as a minimum, shall meet all of the requirements specified in this Section and shall be a product of a manufacturer who has produced automatic transfer switches for a period of at least five (5) years. The equipment shall be compatible with the loads to be served. Assembly of the switches by a fabricator is not acceptable.

C. The manufacturer of the automatic transfer switch shall verify that the switches are listed by Underwriters Laboratories, Inc., standard UL-1008, with 3-cycle withstand and close-in values as indicated on the Drawings or specified herein.

D. The automatic transfer switch shall be a contactor-based design, Type ATV (Open Transition) as manufactured by Cutler Hammer, Siemens Energy and Automation Inc. equivalent, General Electric equivalent, or equal.

2.02 AUTOMATIC TRANSFER SWITCH

A. General

1. Switches shall have ampere ratings and number of poles as indicated on the Drawings and shall be suitable for 480 VAC, three-phase, 60 Hertz operation. The

continuous current rating of the transfer switch shall be no less than the maximum continuous current requirements of the system.

2. For three phase, four-wire systems where a neutral is required, a true four-pole switch shall be supplied with all four electrically and mechanically identical poles mounted on a common shaft. The continuous current rating and the closing and withstand rating of the fourth pole shall be identical to the rating of the main poles. Overlapping neutral shall not be acceptable.

3. The transfer switch shall be housed in a NEMA 1 (gasketed) enclosure fabricated from 12-gauge steel. The transfer switch may also be part of a power distribution/ motor control equipment assembly as shown on the Drawings. Enclosures shall be free standing or suitable for wall mounting as indicated on the Drawings. The enclosure shall exceed the UL-1008 minimum wire bending space requirements. The enclosure shall be equipped with an internal, welded steel, door-mounted print pocket.

4. The transfer switch shall have both top and bottom mounted cable access.

5. The switch shall be capable of switching all classes of load and rated for continuous duty when installed in a non-ventilated enclosure.

6. For switches with a continuous current rating of 100A or less, the three-cycle closing and withstand current rating of the switch shall be 30,000 amperes RMS (minimum). For switches with a continuous current rating greater than 100A and less than or equal to 600A, the three-cycle closing and withstand current rating of the switch shall be 65,000 amperes RMS (minimum). This rating may be obtained through the use of a specific coordinated circuit breaker supplying the automatic transfer switch. The Contractor shall coordinate the supply of this specific circuit breaker with the equipment suppliers. This specific circuit breaker shall be furnished and installed by the equipment supplier. This rating may also be obtained through the use of molded case circuit breakers instead of molded case switches or power contactors.

7. This switch shall be complete with all accessories and listed by UL under Standard UL-1008 for use on emergency systems.

8. All bolted bus connections shall have Belleville compression type washers. Switches for four-wire systems shall be furnished with a fully rated solid neutral bus.

9. The switch shall be equipped with 90°C rated copper/aluminum solderless mechanical type lugs of the proper quantity and size to accommodate the termination of field wiring.

B. Design Requirements

1. Switches shall be double throw, actuated by two (2) electrical operators momentarily energized and connected to a simple over-center linkage. A center-off-position shall be provided as a neutral position during switching. Minimum

transfer time shall be 400 milliseconds. The switches shall be service entrance rated and shall bear the service entrance label as indicated on the Drawings.

2. Switches shall be capable of transferring successfully in either direction with 70 percent of rated voltage applied to the terminals.

3. The time delay between the opening of the closed contacts and the closing of the open contacts shall allow for voltage decay before transfer, allowing the motor and transformer loads to be re-energized after transfer with normal in-rush current. Switches using in-phase monitors are not acceptable.

4. Normal and standby contacts shall be positively interlocked mechanically and electrically to prevent simultaneous closing. Main contacts to be of silver-tungsten alloy, mechanically locked in position in both the normal and standby positions without the use of hooks, latches, or magnets. Provide separate arcing contacts, with magnetic blowouts on each pole.

5. Equip the transfer switch with a permanently attached, safe, manual operator designed to prevent injury to personnel in the event the electrical operator should become energized during manual transfer. The manual operator shall provide the same contact-to-contact transfer speed as the electrical operator to prevent a flashover from slowly switching the main contacts.

C. Sequence of Operation

1. Should the voltage on any phase of the normal source drop below 80 percent or increase to 120 percent, or frequency drops below 90 percent, or increase to 110 percent, or 20 percent voltage differential between phases occur, after a programmable time delay period of of .5 - 15 seconds (adjustable to meet conditions present) to override momentary dips and/or outages, a 10 ampere, 30 VDC contact shall close to initiate starting of the Emergency/Standby Source power plant.

   For switches not involving engine generator sets as power plants, transfer shall occur after an adjustable time delay of 1 - 60 seconds to override momentary dips and outages.

2. Transfer to the standby plant shall occur when 90 percent of rated voltage and frequency has been reached by the standby plant.

3. After restoration of normal power on all phases to a preset value of 90 percent to 110 percent of rated voltage, at least 95 percent to 105 percent of rated frequency, and voltage differential is below 20 percent between phases, an adjustable time delay period of .2 - 30 minutes (to insure the integrity of the Normal Power Source), the load shall be re-transferred to the Normal Source. Should the standby plant fail during this time delay period, the switch shall automatically retransfer to the normal source.

4. After retransfer to the normal power source, the standby plant shall operate at no load for a programmable period of .2 - 30 minutes, shall delay shutdown of the

Emergency/Standby Power Source after retransfer to allow the generator to run unloaded for cool-down, after which the generator shall be automatically shut down. Should the normal power source fail during this time delay period, the transfer switch shall automatically return to the standby source.

5. If the Emergency/Standby power plant should fail while carrying the load, transfer to the Normal Power supply shall be made instantaneously upon restoration of the Normal Source to satisfactory conditions.

D. Controls

1. The transfer switch shall be equipped with a microprocessor-based control system to provide all the operational functions of the automatic transfer switch. The controller shall have two asynchronous serial ports. The controller shall have a real time clock with Nicad battery back-up.

2. The CPU shall be equipped with self-diagnostics which perform periodic checks of the memory, I/O, and communication circuits with a watchdog power fail circuit.

3. The controller shall have a communication port capable of transmitting all available signals via Modbus TCP/IP communication protocol.

4. The controller shall have password protection to limit access to authorized personnel.

5. The controller shall include a 20 character LCD display with a keypad, which allows access to the system.

6. The controller shall include three-phase over/under voltage, over/under frequency, phase sequence detection, and phase differential monitoring on both normal and standby sources.

7. The controller shall be capable of storing the following records in memory for access either locally or remotely:

   a. Number of hours the transfer switch is in the standby position (total since record reset).

   b. Number of hours standby power source is available (total since record reset).

   c. Total transfer in either direction (total since record reset).

   d. Date, time, and description of the last four source failures.

   e. Date of the last exercise period.

   f. Date of record reset.

8. Light emitting diodes shall be mounted on the controller to indicate:

   a. Switch is in normal position.

   b. Switch is in standby position.

   c. Controller is running.

9. A three-phase digital LCD voltage readout, with 1% accuracy shall display all three separate phase-to-phase voltages simultaneously for both the normal and standby source.

10. A digital LCD frequency readout with 1% accuracy shall display frequency for both the normal and standby source.

11. An LCD readout shall display both normal source and standby source availability.

12. The microprocessor controller shall meet the following requirements:

    - Storage conditions - 25°C to 85°C
    - Operation conditions - 20°C to 70°C ambient
    - Humidity 0 to 99% relative humidity, non-condensing
    - Capable of withstanding infinite power interruptions
    - Surge withstand per ANSI/IEEE C-37.90A-1978

13. All control wiring shall be 18 gauge (minimum), 600 VAC, SIS switchboard type. All control wiring shall be identified at each termination (both ends) using tubular, sleeve-type wire markers.

14. The automatic transfer switch controller shall be a Model ATC-900 IQ transfer device as manufactured by Eaton. No substitutions are permitted. The controller shall be furnished with all available optional features as indicated in the Technical Data publication. The controller shall be programmed by the manufacturer at the factory.

E. Accessories

1. Programmable three phase sensing of the normal source set to pickup at 90% and dropout at 80% of rated voltage and overvoltage to pickup at 120% and dropout out at 110% of rated voltage. Programmable frequency pickup at 95% and dropout at 90% and over frequency to pickup at 110% and dropout at 105% of rated frequency. Programmable voltage differential between phases, set at 20%, and phase sequence monitoring.

2. Programmable three phase sensing of the standby source set to pickup at 90% and dropout at 80% of rated voltage and overvoltage to pickup at 120% and dropout out at 110% of rated voltage. Programmable frequency pickup at 95%

and dropout at 90% and over frequency to pickup at 110% and dropout at 105% of rated frequency. Programmable voltage differential between phases, set at 20%, and phase sequence monitoring.

3. Time delay for override of momentary normal source power outages (delays engine start signal and transfer switch operation). Programmable 0-9999 seconds. Factory set at 3 seconds.

4. Time delay on retransfer to normal, programmable 0-9999 seconds, factory set at 300 seconds, with overrun to provide programmable 0-9999 second time delay, factory set at 300 seconds, unloaded engine operation after retransfer to normal.

5. Time delay on transfer to standby, programmable 0-9999 seconds, factory set at 3 seconds.

6. A maintained type load test switch shall be included to simulate a normal power failure, keypad initiated.

7. A time delay bypass on retransfer to normal shall be included. Keypad initiated.

8. Contact, rated 10 A at 30VDC, to close on failure of normal source to initiate engine starting.

9. A plant exerciser shall be provided with (10) 7 day events, programmable for any day of the week and (24) calendar events, programmable for any month/day, to automatically exercise the standby plant programmable in one minute increments. Also include a control switch for selection of either "no load" (switch will not transfer) or "load" (switch will transfer) during the exercise period. Keypad initiated.

10. Relay contacts which close when normal source fails wired to a terminal strip.

11. Relay contacts which open when normal source fails wired to a terminal strip.

12. Two auxiliary contacts rated 15 A at 120 VAC on main shaft, closed on normal and wired to a terminal strip.

13. Two auxiliary contacts rated 15 A at 120 VAC on main shaft, closed on standby and wired to a terminal strip.

2.03 PAINTING

A. Painting shall conform with the requirements of Section 09900. Finish coat shall be ANSI #61.

B. Prior to final completion of the work, all metal surfaces of the equipment shall be cleaned thoroughly, and all scratches and abrasions shall be retouched with the same coating as used for factory finishing coats.

PART 3 – EXECUTION

3.01 INSTALLATION

A. Each automatic transfer switch shall be installed as shown on the Drawings and in accordance with the manufacturer's installation instructions.

B. The automatic transfer switch shall be provided with adequate lifting means for installation of wall or floor mounted enclosures.

C. The Contractor shall tighten all assembled bolted connections to the manufacturer's torque recommendations prior to energizing.

D. Install each switch to allow complete door swing required for component removal. This is specifically required where a switch is set next to a wall to the left of the switch enclosure.

E. The time delay between the opening of the closed contacts and the closing of the open contacts shall be field adjusted to allow for voltage decay before transfer, allowing the motor and transformer loads to be re-energized after transfer with normal in-rush current.

- END OF SECTION -

SECTION 16500

LIGHTING

PART 1 – GENERAL

1.01 THE REQUIREMENT

A. The Contractor shall furnish and install all luminaires, labor, and material, in accordance with the preceding Specifications, the requirements of this Section, and as shown on the Drawings.

B. Lighting shall be in accordance with the latest requirements of the Illuminating Engineering Society, and all luminaires shall have the Underwriters Laboratories, Inc. label of approval.

C. All wiring shall be placed in conduit and shall comply with the Specifications for conduit, outlet boxes, pull and junction boxes, wires and cables, grounding, and other Sections as set forth in these Specifications and as noted herein.

D. Reference Section 16000, Basic Electrical Requirements, and Section 16170, Grounding and Bonding.

1.02 CODES AND STANDARDS

A. The equipment specified herein shall comply with the following codes and standards, where applicable.

1. Underwriter's Laboratories, Inc. (UL):

   a. UL 924 – Emergency Lighting and Power Equipment

   b. UL 8750 – Standard for Light Emitting Diode (LED) Equipment for Use in Lighting Products

   c. UL 1598 – Luminaires

2. American National Standards Institute (ANSI):

   a. ANSI C78.51 – Standard for Electric Lamps-LED (Light Emitting Diode)

   b. ANSI C62.41 – Guide for Surge Voltages in Low-Voltage AC Power Circuits

3. National Electrical Code (NEC), 2014 edition.

1.03 SUBMITTALS

A. In accordance with the procedures and requirements set forth in the General Conditions and Section 01300, Submittals, the Contractor shall obtain from the equipment manufacturer and submit the following:

1. Shop Drawings

2. Operation and Maintenance Manuals

3. Spare Parts Lists

B. Each submittal shall be identified by the applicable specification section.

1.04 SHOP DRAWINGS

A. Each submittal shall be complete in all respects, incorporating all information and data listed herein and all additional information required for evaluation of the proposed equipment's compliance with the Contract Documents.

B. Partial, incomplete or illegible submittals will be returned to the Contractor for resubmittal without review.

C. Shop drawings shall include but not be limited to:

1. Product data sheets.

2. Catalog cuts for each luminaire type showing performance and construction details of standard luminaires, and complete working drawings showing all proposed construction details of special or modified standard luminaires.

3. Photometric curves.

4. LED data including efficiency (Efficacy lumens/watt) information.

5. LED Driver information

6. Catalog data including applicable coefficients of utilization tables, isolux chart of illumination on a horizontal plane, beam efficiency, horizontal and vertical beam spread, and beam lumens.

7. Manufacturer’s warranty information

8. Custom wiring diagrams for each individual lighting contactor. Standard wiring diagrams that are not custom created by the manufacturer for the individual lighting contactors for this project are not acceptable. One wiring diagram which is typical for all lighting contactors is not acceptable. Each wiring diagram shall include wire identification and terminal numbers. Indicate <u>all</u> devices, regardless of their physical location, on the diagrams. Identify on each respective wiring diagram specific equipment names and equipment numbers consistent with those indicated on the Drawings.

9. System (entire luminaire assembly) efficiency data.

10. Pole calculations.

D. Shop drawings shall be submitted to the Engineer for review and acceptance for all luminaires before luminaires and poles are manufactured. Substitutions will be permitted only if acceptable to the Engineer.

E. Manufacturer's catalog number and description in the luminaire schedule on the Contract Documents establishes a level of quality, style, finish, etc. The use of a catalog number describing the various types of luminaires shall be used as a guide only and does not exclude all the required accessories or hardware that may be required for a complete installation.

1.05 OPERATION AND MAINTENANCE MANUALS

A. The Contractor shall submit Operation and Maintenance Manuals in accordance with the procedures and requirements set forth in the General Conditions and Division 1.

1.06 SPARE PARTS

A. All spare parts as recommended by the equipment manufacturer shall be furnished to the City by the Contractor. The following minimum spare parts shall be furnished:

1. A minimum of one (1) LED driver for every ten (10) drivers (of the same type) installed.

B. The spare parts shall be packed in containers suitable for long term storage, bearing labels clearly designating the contents and the pieces of equipment for which they are intended.

C. Spare parts shall be delivered at the same time as the equipment to which they pertain. The Contractor shall properly store and safeguard such spare parts until completion of the work, at which time they shall be delivered to the City.

D. Spare parts lists, included with the shop drawing submittal, shall indicate specific sizes, quantities, and part numbers of the items to be furnished. Terms such as "1 lot of packing material" are not acceptable.

E. Parts shall be completely identified with a numerical system to facilitate parts inventory control and stocking. Each part shall be properly identified by a separate number. Those parts which are identical for more than one size, shall have the same parts number.

1.07 LIGHTING CONTROLS

A. The lighting systems shall be controlled as specified herein and indicated on the Drawings.

B. Lighting contactors shall be furnished and installed for specific lighting control applications as specified herein and indicated on the Drawings.

1.08 WARRANTY

A. The manufacturer's warranty shall in no event be for a period of less than five (5) years from date of delivery of luminaires to the project site and shall include repair labor, travel

expense necessary for repairs at the jobsite, shipping costs, expendables used during the course of repair, or complete replacement of the failed lighting unit.

B. Warranty for LED luminaires shall be provided for the entire luminaire and shall include all parts and accessories. Submittals received without written warranties as specified shall be rejected in their entirety.

PART 2 -- PRODUCTS

2.01 MANUFACTURERS

A. The equipment covered by this Specification is intended to be standard equipment of proven performance as manufactured by reputable concerns. Equipment shall be designed, constructed, and installed in accordance with the best practices of the trade, and shall operate satisfactorily when installed.

2.02 LUMINAIRES

A. Each luminaire shall bear the Underwriters Laboratories, Inc. label. All luminaires shall be furnished complete with lamps of the size and type as indicated on the Drawings and all fittings and hardware necessary for a complete installation. Luminaires shall have all parts and fittings necessary to completely and properly install the luminaires.

B. Luminaire leads shall be as required by NEC and shall be grounded by the equipment grounding conductor in the conduit.

C. All glassware shall be high quality, homogeneous in texture, uniform in quality, free from defects, of uniform thickness throughout, and properly annealed. Edges shall be well rounded and free from chips or rough edges.

D. Emergency luminaires shall be UL 924 listed and have a minimum 90 minutes battery back-up.

E. Luminaires specified to be damp or wet locations rated shall be UL 1598 listed.

F. Luminaires shall be as specified in the luminaire schedule below.

LUMINAIRE SCHEDULE			
TYPE	**WATTAGE**	**DESCRIPTION**	**MFR AND MODEL**
EW1	3.8W	Wall mounted, emergency fixture, 120-277 VAC with 9.6 VDC nickel cadmium battery, gray corrosion and impact resistant molded thermoplastic housing, time delay shutoff, surge and brown-out protection, and low voltage battery cut-off. Battery shall be suitable for 90 minutes. Two (2) 1.9W LED heads, wet location Listed.	Holophane Desoto DM30 WL Series

LUMINAIRE SCHEDULE			
TYPE	**WATTAGE**	**DESCRIPTION**	**MFR AND MODEL**
XW1	1.5W	Wall-mounted, red LED exit sign, 120-277VAC, white faceplate, die cast aluminum housing, single/double face as indicated on the drawings, nickel cadmium battery with self-diagnostics, brownout and surge protected, damp location Listed.	Holophane Magellan MEX Series
LP2	45W (Max)	Pendant-mounted, 120-277VAC, LED luminaire, color temperature of 4000K, lineal ribbed frosted acrylic lens, medium distribution, color rendering index of 90, gasketed fiberglass housing, stainless steel latches, 4ft, 6000 lumen minimum, and wet location Listed.	Holophane EMS LED Series
LW7	28W (Max)	Wall-mounted, 120-277VAC, LED light fixture, color temperature of 4000K, IESNA Type III medium distribution, black A30-cast aluminum housing, 3000 lumen minimum, integral battery backup with 90 minutes illumination time, full cutoff fixture, and wet location Listed.	Holophane HLWPC2 LED series
LL7	92W (max)	Pole-mounted, 120-277VAC, LED light fixture, 20 LEDs, color temperature of 3000K, acrylic lens, full cut-off, forward optics, type III medium distribution, 1400mA LED driver, 9800 lumen minimum, bronze die cast aluminum housing, wet location listed.	Lithonia DSX0 LED series
		Round, dark bronze, straight, fluted, anodized aluminum pole, length as indicated on drawings. Furnish with tenon sized for installing luminaire.	Hapco 31401 series or equal.

2.03 LED DRIVERS

A. Drivers shall have a voltage range of (120-277) +/- 10% at a frequency 60Hz.

B. All drivers shall be designed to a power factor >90% with a total harmonic distortion THD <20% at full load.

C. Case temperature shall be rated for -40°C through +80°C.

D. Drivers shall have overheat protection, self-limited short circuit protection and overload protected.

E. Drivers shall be furnished with a fused primary.

F. Drivers shall have an output current ripple <30%

G. Drivers shall be manufactured by Advance, Universal or equal.

H. Drivers shall be UL Listed for damp location, UL1012, UL935, ROHS.

I. Drivers shall meet FCC 47 Sub Part 15.

J. All drivers shall be provided with ANSI/IEEE C62.41 Category C (10kV/5kA) surge protection.

2.04 LEDs

A. Luminaires provided with LED technology shall utilize high brightness LEDs with a group binning code of P and/or Q.

B. Color Temperature: as specified in luminaire schedule.

C. Junction point shall be designed and manufactured to allow adequate heat dissipation.

D. LEDs shall be rated for 50,000 hours of life, minimum (based on IESNA L70).

2.05 POLES

A. Poles shall be designed to withstand calculated wind force based on wind velocity in accordance with the provisions of the Florida Building Code.

B. Pole mounted luminaires shall be mounted on poles as designated in the luminaire schedule or as indicated on the Drawings. Poles shall have adequate handholes and weatherproof receptacles where indicated. All anchor bolts and nuts, where required, shall be stainless steel.

2.06 LIGHTING CONTROLS

A. Lighting contactors shall be as manufactured by Eaton, the Square D Company, General Electric Company, or Siemens Energy and Automation, Inc. Lighting contactors shall be heavy duty industrial type with 30A minimum rating and shall have the number of contacts required. Contactor ampere rating shall be increased as required to suit the application. Contactor coil voltage shall be as indicated on the Drawings. Contactors shall be the electrically or mechanically held type as indicated on the Drawings. Contactors shall include fused integral control power transformers. Any auxiliary relays, or other devices required for proper operation shall be included.

B. In non-hazardous locations, lighting contactors shall be furnished with the following enclosure type and material of construction, dependent upon the designation of the area in which they are to be installed. Area designations are indicated on the Drawings.

AREA DESIGNATION	ENCLOSURE TYPE AND MATERIAL
Indoor Dry Non-Process Area	NEMA 1, Painted Steel
All Outdoor Areas	NEMA 4X, Type 304 Stainless Steel

C. Photocells shown on the Drawings that are not integral to a luminaire provided by the (lighting manufacturer) shall be provided by the Contractor. Photocells shall be rated for 120 VAC, 1800W, and be provided with 1/2” or 3/4” threads for box mounting. Photocells shall be Model K4121C by Intermatic, or equal.

PART 3 -- EXECUTION

3.01 INSTALLATION

A. Luminaires shall be located symmetrically with building lines as shown on the Drawings. The Contractor shall furnish and install the luminaires to allow "convenient" access for maintenance such as cleaning, relamping, and other activities. The luminaires shall be installed to be accessed by a 12 ft. (max.) ladder. Where luminaires are shown in locations on the Drawings where maintenance would be difficult, the Contractor shall notify the Engineer for direction.

B. The Contractor shall provide and install all inserts, conduit, structural supports as required, lamps, ballasts, poles, wiring, and any other items required for a complete system. Contractor shall properly adjust and test, to the satisfaction of the Engineer, the entire lighting system. The Contractor shall provide pigtails and flexible conduit connected to an outlet box where necessary or required resulting in a neat and complete installation.

C. The Contractor shall protect all luminaires at all times from damage, dirt, dust, and the like. Before final acceptance, all luminaires and devices shall be cleaned of all dust, dirt or other material, be fully re-lamped (except LED luminaires) and in operating condition to the satisfaction of the Engineer.

D. The Contractor shall furnish and install all pendant trapezes and pendant stem hangers with durable swivel or equivalent trapeze hanger permitting normal luminaire motion and self-alignment. Luminaire pendants shall be Appleton Type UNJ ball type flexible hanger at the luminaire and supports from an Appleton JBLX junction box with JBLX hub cover, or equal. Pendant lengths shall be adequate and adjusted to provide uniformity of installation heights above the reference datum. Stems shall be one-piece, with matching canopies and fittings.

E. Luminaires located on the exterior of the building shall be provided with neoprene gasket and non-ferrous metal screws finished to match the luminaires.

F. The finish or exposed metal parts of luminaires and finish trims of all recessed luminaires shall be as directed by the Engineer.

G. The Contractor shall furnish and install recessed luminaires with a separate junction box concealed and located as to be accessible when luminaire is removed.

H. The Contractor shall furnish and install all boxes for luminaires such that the box is not the sole support of the luminaire. The boxes shall be offset to allow maintenance such that access to wiring within the box can be attained without having to consider supporting (holding) the luminaire.

I. All lighting units, when installed, shall be set true and be free of light leaks, warps, dents, and other irregularities. All hangers, cables, supports, channels, and brackets of all kinds for safely erecting this equipment in place, shall be furnished and erected in place by the Contractor.

J. The Contractor shall install luminaires at mounting heights indicated on the Drawings or as instructed by the Engineer. In areas with exposed ducts and/or piping, installation of luminaires shall be adapted to field conditions as determined by the Engineer.

K. The Contractor shall support each luminaire securely. The Contractor shall not secure luminaires to the work of other trades, unless specified or noted otherwise, and shall not support luminaires from plaster. The Contractor shall furnish and install all steel members and supports as required to fasten and suspend luminaires from the structure.

L. In all mechanical equipment areas, the Contractor shall install luminaires on the ceiling after all piping and equipment therein has been installed. Exact locations for such luminaires may be determined by the Engineer on the site during the course of the work.

M. Upon completion of work, and after the building area is broom clean, all luminaires shall be made clean and free of dust and all other foreign matter both on visible surfaces, and on surfaces that affect the lighting performance of the luminaire including diffusers, lenses, louvers, reflectors, and lamps.

N. All luminaires that require physical adjustment shall be so adjusted in accordance with the directions of the Engineer. The Contractor shall also adjust angular direction of luminaires and/or lamps, as directed.

O. Relamping access of luminaires including LED luminaires shall require no special tools. All optical control surfaces such as lenses and reflectors shall be safely and securely attached to luminaires and shall be easily and quickly removed and replaced for cleaning without the use of special tools. No luminaire part that may be removed, for maintenance, shall be held in place by metal tabs that must be bent to remove said part.

P. The Contractor shall furnish and install time switches and photocells as specified herein or indicated on the Drawings. Time switches shall be provided with a manual bypass switch controlling the lights locally and remotely. Time switches shall control contactors, relays, or direct controlling of one, two, or three lighting circuits, as indicated. The Contractor shall furnish and install photocells as specified herein or indicated on the Drawings for automatic "ON/OFF" switching of outdoor lighting.

Q. Lighting contactors shall be provided in the enclosure type and material of construction required for the area in which it is installed. Reference the requirements in Part 2 herein, and the area designations indicated on the Drawings.

R. One (1), ¾" diameter, 10'-0" long ground rod, furnish in accordance with Section 16170, shall be driven adjacent to each pole. The pole, anchor bolts, steel reinforcement bar in the base, and equipment grounding conductor shall all be bonded to the ground rod as indicated in the standard details.

3.02 TESTING

A. All tests shall be performed in accordance with the requirements of the General Conditions and Division 1. The following tests are required:

1. Certified Shop Tests

a. The luminaires shall be given routine factory tests in accordance with the requirement of ANSI, NEMA and Underwriters Laboratories standards.

2. Field Tests

a. Field testing shall be done in accordance with the requirements specified in the General Conditions, Division 1, and NETA Acceptance Testing Specifications, latest edition.

- END OF SECTION -

SECTION 16620

PACKAGED ENGINE GENERATOR SYSTEMS

PART 1 – GENERAL

1.01 THE REQUIREMENT

A. The Contractor shall furnish and install a standby power engine generator set complete with base-mounted fuel storage tank, leak detection systems, piping, exhaust silencer, batteries, charger, enclosure, and devices for automatic and manual control.

B. It is the intent under this Contract to require an installation complete in every detail whether or not indicated on the Drawings or specified. Consequently, the Contractor is responsible for all details, devices, accessories and special construction necessary to properly install, adjust, test, and place in successful and continuous operation the engine-generator set.

C. Use materials which are new, unused, and as specified, or, if not specifically indicated, the best and most suitable of their kinds for the purpose intended, and for the design and expected conditions of service, subject to the approval of the Engineer.

D. Provide workmanship that is first class in every respect. Employ workers thoroughly experienced in such work. A neat and workmanlike appearance in the finished work shall be required.

E. All materials used must bear the inspection labels of the Underwriter's Laboratories, if the material is of a class inspected by the Laboratory.

F. Unless otherwise indicated, the materials to be provided under this Specification shall be the products of manufacturers regularly engaged in the production of all such items and shall be the manufacturer's latest design. The products shall conform to the applicable standards of UL and NEMA, unless specified otherwise. International Electrotechnical Commission (IEC) standards are not recognized. Equipment designed, manufactured, and labeled in compliance with IEC standards is not acceptable.

G. The engine generator sets shall fully comply with all current Environmental Protection Agency (EPA) emission regulations including, but not limited to, the New Source Performance Standards (NSPS) for stationary and non-road generator sets. The engine generator set(s) must meet the EPA new source performance requirements required at the time the engine generator set(s) submittal is approved by the engineer. Engines manufactured previous to the submittal approval date that do not meet the current regulated emissions levels are not acceptable.

H. Reference Section 16000 - Basic Electrical Requirements and Section 16496, Automatic Transfer Switch.

1.02 CODES AND STANDARDS

A. The packaged engine-generator system shall comply with the following Codes and

Standards as a minimum:

1. NEMA MG1, Motors and Generators.
2. NEMA MG2, Safety Standard for Construction and Guide for Selection, Installation and Use of Motors and Generators.
3. ISO STD 8528, Reciprocating Internal Combustion Engines.
4. ISO STD 3046, Performance Standard for Reciprocating Internal Combustion Engines.
5. NFPA 30, Flammable and Combustible Liquids Code.
6. NFPA 37, Standard for Installation and use of Stationary Combustible Engine and Gas Turbines.
7. NFPA 70, National Electrical Code
8. NFPA 70E, Standard for Electrical Safety in the Workplace
9. NFPA 110, Standard for Emergency and Standby Power Systems.
10. UL 508, Industrial Control Equipment.
11. EGSA, Electrical Generating Systems Association.
12. UL 2200 – Stationary Engine Generator Assemblies
13. ANSI C57, Dry-Type Transformers.
14. UL 142, Steel Aboveground Tanks for Flammable and Combustible Liquids.
15. UL 1236 – Standard for Battery Chargers for Charging Engine Starter Batteries.

1.03 SUBMITTALS

A. In accordance with the procedures and requirements set forth in the General Conditions and Section 01300 - Submittals, the Contractor shall obtain from the equipment manufacturer and submit the following:

1. Shop Drawings
2. Spare Parts List
3. Reports of Certified Shop and Field Tests
4. Operation and Maintenance Manuals
5. Manufacturer's Field Start-up Report

6. Manufacturer's Representative's Installation Certification

B. Each submittal shall be identified by the applicable specification section.

1.04 SHOP DRAWINGS

A. Each submittal shall be complete in all respects, incorporating all information and data listed herein and all additional information required for evaluation of the proposed equipment's compliance with the Contract Documents.

B. Partial, incomplete or illegible submittals will be returned to the Contractor without review for resubmittal.

C. Shop drawings for each engine-generator set shall include but not be limited to:

1. A Compliance, Deviations, and Exceptions (CD&E) letter. If the shop drawings are submitted without this CD&E letter, the submittal will be rejected. The letter shall include all comments, deviations and exceptions taken to the Drawings and Specifications by the Contractor AND Equipment Manufacturer/Supplier. This letter shall include a copy of this specification section. In the left margin beside each and every paragraph/item, a letter “C”, “D”, or “E” shall be typed or written in. The letter “C” shall be for full compliance with the requirement. The letter “D” shall be for a deviation from the requirement. The letter “E” shall be for taking exception to a requirement. Any requirements with the letter “D” or “E” beside them shall be provided with a full typewritten explanation of the deviation/exception. Handwritten explanation of the deviations/exceptions is not acceptable. The CD&E letter shall also address deviations, and exceptions taken to each Drawing related to this specification section.

2. Manufacturers printed specification sheets showing critical engine and generator set specifications including the following:

- Dimensions, and weights
- Guaranteed fuel consumption at 25%, 50%, 75% and 100% of full rated load
- Engine bhp available
- Brake Mean Effective Pressure (BMEP)
- Engine jacket water heat rejection
- Exhaust flow rate and temperature at 100% of rated load
- Ventilation and combustion air requirements
- Exhaust backpressure limitation
- Liquid refill capacities
- Voltage regulation characteristics
- Guaranteed noise levels

3. Alternator technical electrical data, including, but not limited to:
   - Alternator efficiency at 50%, 75%, and 100% load
   - Telephone Interference Factor (TIF)
   - Harmonic waveform distortion
   - Type of winding insulation and generator temperature rise
   - Per unit subtransient impedance X'' and X/R ratios for positive, negative, and zero sequences
   - Transient reactance (Xd')
   - Synchronous reactance (Xd)
   - Sub transient time constant (Td'')
   - Transient time constant (Td)
   - DC time constant (Tdc)
   - Decrement curve
4. Manufacturer's printed warranty statement of the engine and generator set showing single source responsibility by the engine manufacturer.
5. Generator control panel equipment and features. Include a written explanation of the auto start/stop logic and operation.
6. Engine-generator set and accessory product data sheets including, but not limited to, the following:
   - Alternator strip heater
   - Radiator
   - Seismically rated vibration isolators
   - Flexible exhaust coupling
   - Exhaust silencer
   - Batteries
   - Battery charger
   - Engine manufacturers shutdown contactors
   - Jacket coolant heater
   - Fuel cooler
   - Fuel tank(s) and pump(s)
   - Fuel level devices
   - Output circuit breaker and trip unit

- Conduit
- Wire and Cable
- Wiring Devices
- Lighting
- Panelboards/combination power unit

7. Standard dealer preventative maintenance contract for review and possible adoption under a separate contract. Dealer must have existing contracts and personnel and contractual detailed performance information available.

8. Normal operating ranges for systems temperature, pressure and speed.

9. Manufacturer's part number for the engine and generator operation guide, parts book, service manual, warranty policy, and installation guide.

10. Location of other similar units showing compliance with the experience requirements specified herein.

11. Phone numbers of twenty-four (24) hour products support contacts and locations.

12. Drawing showing right hand, left hand, and top views of proposed assembly; battery rack, isolators, exhaust silencer, conduit stub up locations, and flexible fittings; wiring schematics, interconnection diagrams (point to point), and written description of engine generator controls and alarm circuits.

13. Control panel layout drawings and wiring diagrams.

14. Drawings and specifications for base-mounted fuel storage tank with accessories and leak detection system. FDEP EQ numbers shall be provided for all accessories and components of base-mounted fuel storage tank and leak detection system.

15. EPA Certificate of Conformity for Exhaust Emissions

16. Detailed drawings showing plan, front, and side views as well as appropriate section views of the weatherproof, engine-generator enclosure. Include product data sheets for all appurtenances (e.g. exhaust fan, thermostat, lighting, switches, receptacles, combination power unit, etc.) to be furnished and installed in the enclosure. Drawings shall be of sufficient detail to assure proper installation by the Contractor.

D. The shop drawing information shall be complete and organized in such a way that the Engineer can determine if the requirements of these Specifications are being met. Copies of technical bulletins, technical data sheets from "soft-cover" catalogs, and similar information which is "highlighted" or somehow identifies the specific equipment items the Contractor intends to provide are acceptable and shall be submitted.

1.05 REPORTS OF CERTIFIED SHOP AND FIELD TESTS

A. Submit two (2) certified copies of all test reports. This includes all shop tests and field tests. Certified shop test reports for prototype engine-generator sets are unacceptable. The manufacturer's serial number for the actual engine-generator set furnished for this project shall appear on all test reports.

1.06 OPERATION AND MAINTENANCE MANUALS

A. Two (2) preliminary copies of Operation and Maintenance Manuals, prepared specifically for this Project, shall be furnished for each item of equipment furnished under this Contract. The preliminary manuals shall be provided to the Engineer not more than 10 days after the equipment arrives on the project site.

B. The preliminary manuals shall be reviewed by the Engineer prior to the Contractor submitting final copies for distribution to the City. Following review of the preliminary copies of the Operation and Maintenance Manuals, one (1) copy will be returned to the Contractor with required revisions noted, or the acceptance of the Engineer noted.

C. Manuals shall contain complete information in connection with assembly, operation, lubrication, adjustment, wiring diagrams and schematics, maintenance, and repair, including detailed parts lists with drawings or photographs identifying the parts. Manuals shall contain all information submitted as part of the shop drawing review process.

D. Manuals furnished shall be assembled and bound in separate volumes, by major equipment items or trades, and properly indexed to facilitate locating any required information. In addition, manuals should be labeled in the front cover with the project, name, equipment description, and manufacturer contract information.

E. Engineer and the City shall be the sole judge of the acceptability and completeness of the manuals and may reject any submittal for insufficient information included, incorrect references and/or the manner in which the material is assembled.

F. Following the Engineer's review of the preliminary manuals, the Contractor shall submit five (2) paper copies and two (2) electronic copies of the final Operation and Maintenance Manuals to the City. The manuals shall reflect the required revisions noted during the Engineer's review of the preliminary documents, as well as any changes made during installation. Failure of the final manuals to reflect the required revisions noted by the Engineer as well as changes made during installation will result in the manuals being returned to the Contractor. Acceptable final Operation and Maintenance Manuals shall be provided not more than one (1) month after receipt of the Engineer's comments.

1.07 SPARE PARTS

A. Routine maintenance and adjustments shall be performed without the use of special tools or instruments. All spare parts as recommended by the equipment manufacturer shall be furnished to the City by the Contractor.

In addition to the manufacturer recommended spare parts, the Contractor shall furnish the following spare parts for each engine-generator set:

No. Required	Description
1	Set of Fuel Oil Particulate Filters
1	Set of Air Filters
1	Set of Lube Oil Filters
1	Set of Fuel Oil/Water Separator Filters
1	Set of Coolant Filters

B. The spare parts shall be packed in containers suitable for long term storage, bearing labels clearly designating the contents and the pieces of equipment for which they are intended.

C. Spare parts shall be delivered at the same time as the equipment to which they pertain. The Contractor shall properly store and safeguard such spare parts until completion of the work, at which time they shall be delivered to the City.

D. Spare parts list, included with the shop drawing submittal, shall indicate specific sizes, quantities, and part numbers of the items to be furnished. Terms such as "1 lot of packing material" are not acceptable.

E. Parts shall be completely identified with a numerical system to facilitate parts inventory control and stocking. Each part shall be properly identified by a separate number. Those parts which are identical for more than one size, shall have the same parts number.

F. The dealer shall have sufficient parts inventory to maintain over-the-counter availability of at least 90% of any required part and 100% availability within 48 hours.

1.08 IDENTIFICATION

A. Each engine-generator set shall be identified with the identification name/number indicated on the Drawings (e.g., Generator No. 1, Generator No. 2, etc.). A nameplate shall be securely affixed in a conspicuous place on the generator main circuit breaker or output termination box enclosure. Nameplates shall be as specified in Section 16195, Electrical - Identification.

1.09 WARRANTY TERMS

A. The manufacturer's and Dealer's warranty shall in no event be for a period of less than two (2) years or two-thousand (2,000) hours of operation, whichever comes first, from date of delivery of equipment to the project site and shall include repair labor, travel expense necessary for repairs at the jobsite, and expendables (lubricating oil, filters, coolant, and other service items made unusable by the defect) used during the course of repair. Submittals received without written warranties as specified shall be rejected in their entirety.

B. Provided warranty shall cover all equipment included in the scope of supply. This warranty shall include, but is not limited to, the following:

- Engine-generator set and respective auxiliary equipment
- All controls for the engine-generator set

C. Batteries shall be provided with two (2) year full replacement guarantee, and a pro-rated replacement schedule thereafter.

1.10 OIL SAMPLING KIT

A. The generator set supplier shall provide an oil sampling analysis kit which operating personnel shall utilize for scheduled oil sampling. All equipment needed to take oil samples shall be provided in a kit and shall include the following:

1	Sample extraction gun
10	Bottles
10	Postage-paid mailers
1	Written instructions

An additional oil sampling kit shall be made available to the City to continue the sampling when the above specified kit has been depleted. All kits in addition to that specified above shall be at an additional cost to the City, if the City desires to continue the sampling service.

1.11 PREVENTIVE MAINTENANCE AGREEMENT

A. The engine/generator set supplier shall provide a preventive maintenance agreement using qualified factory trained service personnel, for a period of 2-years minimum. Provide all recommended fluids, dealer labor, travel labor and travel mileage to complete the suggested preventive maintenance as defined in the manufacturer's Operation and Maintenance Manual and as listed below. All parts shall be new and provided by the generator manufacturer. The maintenance agreement work shall be performed every 6 months, and shall include the following as a minimum:

1. Check oil level, check oil pressure safety shutdown switches, complete an oil sample analysis, check oil pressure and gauges, and inspect the system for leaks. Change oil and oil filter if required.

2. Check coolant level, inspect/replace cooling system hoses, check high/low temperature alarms and shutdowns, inspect radiator, inspect fan and fan belts (tighten or replace as required). Flush coolant system and replace coolant if required.

3. Inspect the fuel system including fuel pumps and tank(s), check fuel pressure, inspect fuel filters and replace if required, and check for water in fuel storage tank.

4. Check the battery and battery charging system including a voltage test, check and clean battery terminals, check and inspect engine starting system.

5. Inspect and test the generator, check bearing grease and add grease if required, check terminations, and complete a generator winding insulation resistance (i.e. megger test).

6. Check engine control system including overspeed alarms and shutdowns, overcrank alarm, engine starter, circuit breaker and fuses, and test and adjust engine governor.

7. Check and the engine air intake and exhaust systems for leaks and damage. Check air filter and replace if required.

8. Test automatic transfer switch. Check all indicating lights and replace as required.

9. Perform 4-hour load bank test at full load using resistive load bank. This test shall be performed at the end of the first year, and at the final preventive maintenance visit.

10. Inspect all components of the generator enclosure including, but not limited to, lights, louvers, fans, doors, etc.

PART 2 -- PRODUCTS

2.01 MANUFACTURERS

A. The equipment covered by this Specification is intended to be standard equipment of proven performance as manufactured by reputable concerns. Equipment shall be designed, constructed and installed in accordance with the best practices of the trade, and shall operate satisfactorily when installed as shown on the Drawings.

B. Consideration will be given only to the equipment of those manufacturers who have furnished comparable size diesel engine-generator sets for at least two similar installations that have been in regular successful operation for not less than five (5) years.

C. The engine-generator set manufacturers shall be Cummins, Caterpillar, MTU Onsite Energy, Generac, or Kohler. **No substitutions shall be permitted**. The engine-generator set manufacturer and/or dealer shall be responsible for the entire engine-generator package including the engine-generator set with all accessories and equipment specified herein and all other devices required for a complete and operable system.

2.02 GENERAL DESCRIPTION

A. The engine-generator set shall be rated as specified herein and as indicated on the Drawings. It shall have the capability to operate at its standby rating for the duration of any power outage with all accessories including engine running devices, silencer, radiator, cooling fans, fuel system, and all appurtenances complete as it would be installed in the field. The Contractor shall note and take appropriate action regarding the intended

operation of the engine-generator sets while connected to motor driven loads controlled by variable frequency drives (VFDs).

2.03 ENGINE

A. The engine shall be diesel, 4 cycle, radiator cooled, and shall be turbocharged having an operating speed of 1800 RPM. Engine shall operate on ASTM D-975 Grade No. 2D S15 ultra-low sulfur diesel fuel. Engines requiring any other fuel type are not acceptable.

B. The engine will not be acceptable if the design is a conversion of a naturally aspirated engine to which a turbo-blower has been attached, unless the engine is certified by the manufacturer as having been analyzed and redesigned with ample provisions for increased stresses and bearing or heat loads due to increased pressures and rate of heat liberation.

C. Break mean effective pressure (BMEP) shall not exceed 320 psi at rated load. Brake Horsepower (BHP), and Engine-Generator efficiency shall conform with ASME, IEEE and NEMA standards that electrical energy delivered by the machine is within the minimum certified guaranteed fuel oil consumption rate and evidence that these parameters have been met shall be furnished.

D. Only engine manufacturers' standard ratings shall be acceptable. No dealer special ratings will be acceptable.

E. The specified standby kW rating shall be for continuous electrical service during interruption of the normal utility source, per NEMA standards.

F. Engine speeds shall be governed by an electronic isochronous governor that will sense generator speed and provide accurate load transient correction capability at less than 0.5 percent regulation, from no load to full load generator output.

2.04 ALTERNATOR

A. The alternator shall conform to NEMA and IEEE standards and be rated as indicated on the Drawings. The alternator shall have a UL 2200 listing. The alternator shall be brushless, salient pole, 2/3 pole pitch and synchronous for operation at 480VAC, wye connected, as indicated on the Drawings. The generator shall be capable of delivering 793 SkVA (minimum) at an instantaneous voltage dip of no more than 20% voltage drop.

B. Laminations and windings shall be designed for minimum reactance, low voltage waveform distortion and maximum efficiency.

C. The main stator coils shall be random wound. Insulation shall be Class H, 125 degrees C rise according to NEMA standards. The insulation system shall be made of epoxies and polyesters which are inorganic compounds and shall prevent fungus growth.

D. The rotor shall be dynamically balanced and include amortisseur windings to minimize voltage deviations and heating effects under unbalanced load conditions.

E. Radio interference suppression (both directions) shall be provided in accordance with NEMA and IEEE Standards.

F. The alternator shall have a brushless, permanent magnet generator (PMG) excitation support system to provide input to the automatic voltage regulator to enable the alternator to support 300% of rated current for 10 seconds to allow fault clearing.

G. Waveform deviation shall not exceed 5% from true sine wave. The transient response from no load to full load in one step of the engine-generator set shall not exceed a voltage dip of 35%, a frequency dip of 20%, and shall recover to complete steady state performance within 12 seconds for both voltage and frequency. The transient response from full load to no load in one step shall not exceed a voltage overshoot of 7% and shall recover to steady state performance within 3 seconds. Transient performance shall be in accordance with ISO 8528.

H. The Telephone Influence Factor (TIF) shall be less than 50.

I. The voltage regulator shall be an adjustable, solid-state, three-phase RMS sensing, volts/hertz type. Voltage regulation shall be a minimum of +/-0.25% from no load to continuous rating. The voltage regulator shall provide +/-10% voltage adjustment. The voltage regulator shall be located within the engine control panel.

J. An alternator mounted strip heater shall be furnished and installed as part of the system. The strip heater shall be energized to prevent condensation when the engine generator set is not running.

2.05 CONTROLS

A. Engine-generator monitoring and controls shall be mounted in a single NEMA 12 (gasketed) dust-tight enclosure. A suitable accessible terminal strip having all wires properly identified shall be furnished within the enclosure. The control panel shall be mounted at a height of 4'-8" measured from the center of the panel to the equipment pad or enclosure floor.

B. The control panel shall accept a dry contact input for engine starting from remote locations. The starting and stopping of the engine-generator set shall be initiated through the control panel only. When the engine starts, starting control shall automatically disconnect cranking controls. Four (4) cranking cycles of 10 seconds "ON", 10 seconds "OFF" shall be provided. The starting controls shall prevent re-cranking for a definite time after source voltage has been reduced to a low value, or the four (4) cranking cycles have been reached without a successful start. The automatic engine starting controls shall use industrial rated control type elements throughout, and controls shall have the capability to operate at 50% battery voltage.

C. Speed sensing shall be provided to protect against accidental starter engagement with a moving flywheel. Battery charging alternation output voltage is not acceptable for this purpose.

D. A generator/exciter field circuit breaker with shunt trip device shall be furnished and installed as part of the engine generator set. Shunt trip shall be activated upon engine-generator fault conditions.

E. A main line circuit breaker as specified herein and sized per manufacturer recommendations shall be installed as a load circuit interrupting and protection device in a NEMA 12 (gasketed) dust-tight enclosure. It shall operate both manually for normal operation and automatically for protection against overload or short circuits. Generator/exciter field circuit breakers are not acceptable for this service.

The circuit-breakers described above shall be manufactured and tested in accordance with U.L. and NEMA AB1 standards. Their interrupting rating shall be suitable for the available fault current. All electrical ratings shall be suitable for the application.

F. Engine-generator monitoring and control shall be provided using a microprocessor based control panel complete with an LCD display. The devices necessary for automatic starting shall be on the engine and in the engine control panel. The following hardware (minimum) shall be provided on the front of the control panel; the use of the LCD display and keypad to accomplish the same function is <u>not acceptable</u>:

1. Keyed engine control mode switch (Run-Off-Auto)
2. Large, red emergency stop pushbutton
3. Generator voltage adjust potentiometer
4. Generator frequency adjust potentiometer

G. The following parameters (minimum) shall be shown on the LCD display or otherwise be indicated at the control panel:

1. Engine oil pressure
2. Coolant temperature
3. Generator output voltage
4. Generator output current
5. Generator elapsed run time
6. Generator output frequency
7. Engine run
8. Engine fail
9. Low coolant temperature
10. Pre-high engine temperature
11. Pre-low fuel level
12. Engine speed (RPM)

H. The following events (minimum) shall cause an immediate shutdown of the engine-generator set if it operating, or prevent starting if it is not operating. The specific event that causes the shutdown/prevents starting shall be shown on the LCD display or otherwise be indicated at the control panel. A reset shall be required to clear the fault and allow the unit to operate:

1. Engine coolant high temperature
2. Engine low oil pressure
3. Low fuel level
4. Engine overspeed
5. Engine overcrank
6. Engine tried to start but failed
7. Low coolant level

I. The generator control panel shall have a communication port capable of transmitting all available engine-generator set data via Modbus TCP/IP protocol.

J. The generator control panel shall have Form C dry contacts rated 5A (minimum) at 120VAC/24VDC for the following signals:

1. Engine coolant high temperature
2. Engine low oil pressure
3. Pre-low fuel level
4. Low fuel level
5. Engine overspeed
6. Engine overcrank
7. Engine tried to start but failed
8. Low coolant level
9. Engine fail
10. Engine run

The normally closed (NC) contacts for all of the above signals (except engine run and pre low fuel level) shall be wired in series to provide a common "Generator System Failure" alarm for remote indication. Other contacts shall also be wired as a part of this alarm as specified elsewhere herein.

2.06 ENGINE ACCESSORIES

A. Furnish and install the engine with all accessory equipment and appurtenances which are required for proper operation, including the following:

1. Heavy duty dry type air filler with restriction indicator

2. Heavy duty lubricating oil filter, bypass type, with replaceable absorbent-type elements

3. Lubricating oil cooler, water cooled

4. Heavy duty crankcase vapor coalescer

2.07 MOUNTING

A. Couple the engine and generator together through a flexible, non-backlash type, all metal coupling which overcomes all normal misalignment stresses and transmits full engine torque with ample safety factor. Also provide flexible connections for piping connections.

2.08 COOLING SYSTEM

A. Provide a radiator manufactured of a non-corrosive material mounted on the engine. The radiator core shall be coated with a corrosion resistant coating. Corrosion resistant coating shall be a corrosion resistant baked phenolic coating or similar.

B. Connect the radiator to the engine internal cooling system with flexible piping. Furnish appropriately sized coolant expansion tank for the cooling system.

C. The engine shall be cooled through a radiator sized to continuously maintain safe operation at full load and at 104°F outside ambient air with 50% ethylene glycol coolant. A blower type fan and low noise fan drive and controls shall be furnished. The fan and all rotating members and drive belts shall be guarded and meet OSHA standards. Proof of 104°F ambient temperature capability shall be required.

D. Coolant

1. After the cooling system is flushed and cleaned, provide an initial fill of coolant consisting of 50% ethylene glycol. An anti-corrosion treatment shall be added during the initial fill.

2. The coolant shall meet the requirements of the generator manufacturer including corrosion inhibitors provided in the coolant to protect the engine cooling system.

E. The engine shall be equipped with coolant heaters. Heaters shall be in accordance with the following:

1. Unit mounted thermal circulation type coolant heater with coolant recirculation pump

shall be furnished to maintain engine jacket coolant temperature as recommended by manufacturer in a 3 phase, ambient temperature of minus 20°F. The heater shall be 208 VAC, 60 hertz, 3-phase, thermostatically controlled.

2. The heater shall be of sufficient capacity to keep the coolant at a suitable temperature for trouble-free starting.

3. Each heater shall be provided with a suitable contactor to automatically disconnect the heater when the engine is started.

2.09 ENGINE STARTING AND CHARGING SYSTEM

A. Engine starting batteries shall be sealed, lead-acid type, rated 12 volts, wired for 24V starting batteries shall have adequate capacity for rolling the engine for five (5), ten (10) second cycles without starting, and then operating the control devices in the local generator controls for two (2) hours. The batteries shall be mounted on a suitable non-corrosive rack. Batteries shall have battery cables with lugs and shall be provided with lugs for connection to the battery charger.

B. Battery charger shall be a U.L. 1236 listed, automatic, solid-state battery charger, 20 A (min.) current limited, ±2% voltage regulation, ±10% line voltage variation, automatic float equalizing system, DC voltmeter, and DC ammeter. Provide a Form C unpowered (dry) contact to indicate a low battery alarm condition. Battery charger shall be suitable for operating on a 208 VAC, 1-phase power source.

C. In addition, the engine shall be provided with an engine battery charging alternator that automatically charges the starting batteries during engine operation.

2.10 EXHAUST SILENCER

A. Furnish and install an exhaust silencer. Silencers shall be of critical type and sized to produce a high degree of silencing. Reference the sound attenuation requirements specified herein.

B. Connect the silencer to the engine exhaust manifold with a high corrosion and temperature resistant stainless steel flexible convoluted exhaust pipe. Use flange-type connections. Provide a taper-cut tail pipe complete with rain cap to exhaust the gases to the atmosphere.

C. The silencer (if installed inside), exhaust piping, catalyst (where required), and expansion fittings, including collector box, shall be completely covered with a removable insulation blanket in order to protect operating personnel and to reduce noise. Insulation shall be of composite fiberglass and stainless steel construction capable of withstanding 1200°F continuously. The insulation blankets shall be tailored and custom fabricated to fit the contours of the manifolds. Average weight of the insulating blanket shall be 1.5 psf. Insulation shall conform to MIL-1-16411D, Type II and shall be custom fabricated to fit the contours of the components.

D. The silencer system shall be designed, furnished, and installed to prevent moisture and

condensation from corroding the silencer. All exterior components of the exhaust system shall be of 316 stainless steel.

E. Silencer shall be mounted within or exterior to the generator enclosure dependent on generator size and manufacturers standards. Silencers mounted on the outside of the enclosure shall be 316 stainless steel construction on its interior and exterior. Silencers mounted within the generator enclosure shall be painted steel and insulated using a calcium silicate material covered by a brushed aluminum skin.

2.11 WIRING

A. Furnish and install internal wiring in the engine-generator set. All internal wiring between the generator and engine-generator control panel, the on-board power source and all accessories shall be provided.

2.12 AUTOMATIC TRANSFER SWITCH

A. **Furnish and install an automatic transfer switch as indicated on the Drawings and specified in Section 16496, Automatic Transfer Switch. The switch and its operation shall be considered to be part of the standby generator system.**

2.13 BASE MOUNTED FUEL TANK

A. The generator set shall be supplied with a U.L.-142 listed base mounted fuel tank of sufficient capacity to operate the engine-generator set at full load for a minimum of 24 hours. The tank, painted in a color as selected by the City, shall be fabricated from steel with a rupture basin and leak detector system. The alarm and indicator for the leak detection shall be mounted adjacent to the generator control panel and a contact for remote indication of a fuel leak condition shall be provided. This contact shall be wired as part of a common "Generator System Failure" alarm.

B. A level device shall also be furnished and installed to provide a local (generator control panel) and remote indication of pre-low fuel tank level and low fuel tank level. The pre-low fuel tank level shall activate a set of dry contacts for remote alarm indication. The low fuel tank level alarm shall shut down the engine to prevent the fuel level from dropping below the fuel pickup piping in the fuel tank. The pre-low fuel level alarm shall activate when only 18 hours of fuel for full load operation remains in the fuel tank. The remote low fuel tank level alarm shall be wired separate from the "Generator System Failure" alarm.

C. The tank shall be supplied with all necessary fuel supply, return, vent, and fill fittings and a fuel level gauge. The lockable fill port and level gauge shall be easily accessible from outside the enclosure. Provide a valve that automatically closes the fuel fill inlet when the tank level reaches 95% of its capacity. The vent line shall be piped to the outside and be equipped with a fill whistle.

D. The underside of the tank shall not be in contact with the mounting surface (concrete pad).

E. Fuel tank shall be equipped with necessary hardware and penetrations to interface with the fuel polishing system specified herein.

2.14 WEATHERPROOF ENGINE - GENERATOR ENCLOSURE

A. Furnish and install an outdoor, weather-protective housing constructed to satisfy 170MPH wind loading, per Florida Building Code requirements. The housing shall be furnished complete with a full sub-base floor resulting in complete enclosure. The enclosure shall be factory-assembled to the engine-generator set base and radiator cowling. Lifting eyes shall be provided. Housing shall provide ample airflow for generator set operation. The housing shall be constructed of 12 gauge (minimum) aluminum, reinforced to be vibration free in the operating mode. The housing shall have hinged side-access doors and rear control panel access door. Each door shall have at least two latch-bearing points. All doors shall be lockable. All steel sheet metal shall be primed for corrosion protection and finish painted in a color as selected by the City. Roof shall be peaked to allow drainage of rain water. Unit shall have sufficient guards to prevent entrance by small animals. Batteries shall fit inside enclosure and alongside the engine (batteries under the generator are not acceptable). Unit shall have engine coolant and oil drains piped to outside the unit to facilitate maintenance. Each drain line shall have a valve located near the fluid source.

B. Provide walk-around access within the enclosure. Access shall be two feet (minimum) measured from the outermost engine generator component or four feet from the rails, whichever is greater. Interior height from the sub-base floor to the ceiling shall be 84” minimum. Doors shall have panic hardware and height shall be 72”, minimum. “Skin-tight”, “reach in”, or “Drop-over” housings are not acceptable.

C. The enclosure shall be furnished with a combination power unit as specified herein. This unit shall serve as the power distribution panel for all accessories specified herein and indicated on the Drawings (e.g. alternator mounted space heater, battery charger, leak detection system, etc.) that require “shore power”. The enclosure manufacturer shall furnish and install conduit and wire necessary to provide the power from the unit to all accessories.

1. The combination power unit shall be a combination of a dry type transformer and a lighting panelboard. Combination power unit shall be 15kVA minimum, or larger as required to serve all loads. Combination power unit shall be 208/120V to provide both 3 phase and single-phase power. The transformer and panelboard shall be as specified in Section 16470 – Panelboards. Combination power units shall be suitable for the environment in which they are installed.

D. All hardware (nuts, bolts, screws, washers, etc.) that is installed on the exterior of the generator enclosure shall be stainless steel. Galvanized steel hardware is not acceptable.

E. Aluminum stairs and aluminum handrail shall be furnished at each door. The aluminum stairs shall be as specified in Specification Section 05510 – Metal Stairs. The aluminum handrail shall be as specified in Section 05520 – Handrails and Railings. The Contractor

shall extend the generator concrete pad as necessary to accommodate the installation of the aluminum stairs.

F. Linear LED lighting shall be provided in sufficient quantity to maintain 20 foot-candles of illumination at floor level and shall be suitable for operation in cold weather. Compact fluorescent lighting fixtures are not acceptable. Interior lighting shall be controlled by 3-way light switches located at each door. Reference Section 16141 – Wiring Devices.

G. Convenience receptacles shall be furnished at each door within the enclosure. Receptacles shall be 125V, 20A, UL 943 Listed, GFCI, two-pole, three wire grounded type. Reference Section 16141 – Wiring Devices.

H. Conduit and wire shall be in accordance with Sections 16111 – Conduit for Electrical Systems and Section 16123 – Low-Voltage Conductors and Cables, respectively.

I. All air intake louvers shall be furnished with rain guards or designed to eliminate water intrusion to the interior of the enclosure when the generator is operating at full load (maximum airflow) during rain events.

2.15 SOUND ATTENUATION

A. Extreme care shall be exercised in providing equipment for and setting the engine-generator in place to guard against excessive noise transmission and vibrations. Fasten to the underside of the skids seismically-rated spring type isolators.

B. The engine-generator enclosure shall be designed, furnished, and installed to reduce source noise to 78 dB(A) as measured at seven (7) meters from the enclosure.

PART 3 -- EXECUTION

3.01 INSTALLATION

A. The standby generator system shall be furnished and installed as indicated on the Drawings and as recommended by the equipment manufacturer.

B. The initial filling of the fuel storage tank shall be provided by the Contractor. Fuel tank shall be filled to its full capacity. At the conclusion of all field testing, the Contractor shall fill the fuel storage tank back to its full capacity. Fuel shall be ultra-low sulfur diesel Grade No. 2D S15 in accordance with ASTM D-975. Fuel shall be new and free from contaminants and water.

3.02 SERVICES OF MANUFACTURER'S REPRESENTATIVE

A. The Contractor shall provide the services of a qualified generator manufacturer's factory-trained technical representative who shall adequately supervise the installation and of all equipment furnished under this Contract. The manufacturer's representative shall certify in writing that the equipment has been installed in accordance with the manufacturer's recommendations. No further testing or equipment startup may take place until this

certification is accepted by the City.

B. The manufacturer's technical representative shall perform all startup and field testing of the generator assembly as specified herein.

C. The Contractor shall provide training for the City's personnel. Training shall be conducted by the manufacturer's factory-trained representative who shall instruct City's personnel in operation and maintenance of all equipment provided under this Section. Training shall be provided for two (2) sessions of four (4) hours each. Training shall not take place until after the generator has been installed and tested. Training shall be conducted at times coordinated with the City and shall occur during the same week as the training specified in Section 16496 – Automatic Transfer Switch.

D. The services of the manufacturer's representative shall be provided for a period of not less than as follows:

1. One (1) trip of two (2) working days during installation of the engine-generator set.

2. One (1) trip of one (1) working day to perform startup of the engine-generator set.

3. One (1) trip of two (2) working days to perform the field testing of the engine-generator set.

4. One (1) trip of one (1) working day to perform training as specified herein.

E. Any additional time required to achieve successful installation and operation shall be at the expense of the Contractor.

3.03 TESTING

A. All tests shall be performed in accordance with the requirements of the General Conditions and Division 1. The following tests are required:

1. Witnessed Shop Tests

a. None required.

2. Certified Shop Tests

a. Fully test the engine-generator set with all accessories in the manufacturer's plant before shipment. Tests shall be conducted through the use of balanced, three-phase, dry-type, resistive load banks.

b. Record complete test data for frequency, amperes, volts, power factor, exhaust temperature, coolant temperature, and oil pressure.

c. The manufacturer shall conduct a shop test run of at least six (6) consecutive hours for the set under the following conditions of load, in the following order:

3 hours - full load

1 hour - 3/4 load

1 hour - 1/2 load

1 hour - 1/4 load

d. Fuel, lubricants, and other fluids as required for the shop tests shall be furnished by the manufacturer.

3. Field Tests

a. Field tests shall be performed by the generator manufacturer's technical representative. The Contractor shall obtain from the manufacturer and submit a detailed field test plan and procedures documenting the intended field test program.

b. In the presence of the Engineer and City, the representative shall inspect, adjust, and test the entire system after installation and leave in good working order. Field tests specific to each generator shall be conducted after the entire engine-generator system is installed including, but not limited to, the following: diesel fuel tanks including leak detection, exhaust silencer, radiators, enclosures, batteries, and all other equipment included in the complete system.

c. Field test the generator enclosure to ensure the enclosure performs as specified herein. The generator enclosure field tests shall include water tests to confirm the enclosure does not leak and that the air intake louvers eliminate water intrusion to the interior of the generator enclosure when the generator is operating at its full load capacity (maximum airflow). A garden hose shall be used to simulate falling rain for this test. Water supply and garden hose will be provided by the City for this test.

d. Field test, as far as practicable, all control, shutdown, and alarm circuits. Document the successful completion of these tests as witnessed by the City and the Engineer.

e. Generator load tests shall be conducted through the use of balanced, three-phase, dry-type, reactive (0.8 power factor) load banks. Conduct a continuous run test using the load bank without shutdown for the engine-generator set under the following load conditions (in this specific order) and in the presence of the City and Engineer:

- 5 hours, full load
- 1 hour, 3/4 load
- 1 hour, 1/2 load
- 1 hour, 1/4 load

Record complete test data for frequency, amperes, volts, power factor, exhaust temperature, coolant temperature, and oil pressure every 15 minutes during the continuous run test. If any failures, malfunctions, and/or shutdowns occur during this test, the problems shall be fixed and the test shall be restarted. The

test shall not be considered complete until the generator has operated for eight (8) consecutive hours without any shutdowns under the conditions listed above.

f. The Contractor shall collect a sample of engine oil from each engine for analysis after the start-up and testing has been completed. The sampling method shall be of the atomic absorption spectrophotometry method and be accurate to within a fraction of one part per million for the following elements:

- Iron
- Chromium
- Copper
- Aluminum
- Silicon
- Lead

The sample shall also be tested for the presence of water, fuel dilution, and coolant.

The oil samples shall be analyzed at an independent laboratory that is not a part of the engine supplier's facility. Immediate notification of critical results shall be provided to the City when the analysis shows any critical reading.

g. All fuel, lubricants, and other fluids required to complete all field tests shall be paid for by the Contractor.

3.04 PAINTING

A. Prior to final completion of the work, all metal surfaces of the equipment shall be cleaned thoroughly, and all scratches and abrasions shall be retouched with the same coating as used for factory finishing coats.

- END OF SECTION -

SECTION 16670

LIGHTNING PROTECTION SYSTEMS

PART 1 – GENERAL

1.01 THE REQUIREMENT

A. The Contractor shall furnish, install, test, and place in satisfactory operation a complete lightning protection system as specified herein. This is a performance specification. The Drawings do not show a complete lightning protection system design. The Contractor shall retain the services of a firm specializing in the design, installation, and testing of lightning protection systems.

1.02 CODES AND STANDARDS

A. The system shall comply with the following codes and standards:

1. Underwriters Laboratories, Inc. (U.L.):

   a. U.L. 96 - Lightning System Components

   b. U.L. 96A - Installation Requirements for Lightning Protection Systems

   c. U.L. 467 – Grounding and Bonding Equipment

2. National Fire Protection Association (NFPA):

   a. ANSI/NFPA 780 - Lightning Protection Code

3. Lightning Protection Institute (LPI):

   a. LPI-175 - Standard of Practice

1.03 SUBMITTALS

A. In accordance with the procedures and requirements set forth in the General Conditions and Section 01300, Submittals, the Contractor shall obtain from the equipment manufacturer and submit the following:

1. Shop Drawings

2. Operation and Maintenance Manuals

3. Spare Parts List

4. Test Reports

5. UL Master Label Certification

1.04 SHOP DRAWINGS

A. Each submittal shall be complete in all respects, incorporating all information and data listed herein and all additional information required for evaluation of the proposed equipment's compliance with the Contract Documents.

B. Partial, incomplete or illegible submittals will be returned to the Contractor without review for resubmittal.

C. Shop drawings for each lightning protection system shall include, but not be limited to:

1. Product data sheets.

2. Complete U.L. approved, full size layout and installation drawings/details with clearly marked dimensions. Drawings shall indicate the exact location of all system components. Drawings shall be signed by a full-time employee of the lightning protection system manufacturer who is in responsible charge of this project and has been engaged in the business for at least ten (10) years.

3. Weights of major all components.

4. Bill of material list for each lightning protection system.

5. Manufacturer's installation instructions.

6. Manufacturer's and installer's standard warranty.

7. Evidence of the designer/installers UL listing.

D. The shop drawing information shall be complete and organized in such a way that the Engineer can determine if the requirements of these specifications are being met. Copies of technical bulletins, technical data sheets from "soft-cover" catalogs, and similar information which is "highlighted" or somehow identifies the specific equipment items the Contractor intends to provide are acceptable and shall be submitted.

1.05 OPERATIONS AND MAINTENANCE MANUALS

A. The Contractor shall submit operation and maintenance manuals in accordance with the procedures and requirements set forth in the General Conditions and Division 1. The manuals shall include:

1. Instruction books and/or leaflets.

2. Recommended spare parts list.

3. Final as-built construction drawings included in the shop drawings incorporating all changes made during the installation.

4. All other information that was included in the shop drawing submittal.

1.06 SPARE PARTS

A. The lightning protection system shall be furnished with all spare parts as recommended by the equipment manufacturer.

\In addition to the manufacturer recommended spare parts, the Contractor shall furnish the following minimum spare parts for each structure provided with a lightning protection system under this Contract:

No. Required	Descriptions
2	Air Terminals
2	Point Tip Protectors

B. The spare parts shall be packed in containers suitable for long term storage, bearing labels clearly designating the contents and the pieces of equipment for which they are intended.

C. Spare parts shall be delivered at the same time as the equipment to which they pertain. The Contractor shall properly store and safeguard such spare parts until completion of the Work, at which time they shall be delivered to the Owner.

D. Spare parts lists, included with the shop drawing submittal shall indicate specific sizes, quantities, and part numbers of the items to be furnished. Terms such as "1 lot of packing material" are not acceptable.

E. Parts shall be completely identified with a numerical system to facilitate parts inventory control and stocking. Each part shall be properly identified by a separate number. Those parts which are identical for more than one size, shall have the same part number.

PART 2 – PRODUCTS

2.01 MANUFACTURERS

A. The lightning protection systems covered by this Specification shall be furnished using standard components of proven performance as manufactured by reputable concerns. The systems shall be designed, constructed and installed in accordance with the best practices of the trade, and shall operate satisfactorily when installed.

B. The lightning protection systems shall be furnished and installed by A-C Lightning Security, Inc., Thompson Lightning Protection, Inc, Lightning Elimination and Consultants, Modern Lightning Protection Company, Inc. or equal.

C. System designer/supplier qualifications shall be as follows:

1. System components shall be manufactured by a company specializing in lightning protection equipment with a minimum of 5 years documented experience. Company shall be listed in the Section entitled "Lightning Conductor, Air Terminals and Fittings" of the U.L. "Electrical Construction Materials Directory" for at least 5 years previous to this Contract's bid opening date.

2. The system designer/installer shall be an authorized installer of manufacturer with a minimum of 5 years of documented experience. Designer/Installer shall be listed in the section entitled "Lightning Protection Installation" of the U.L. "Electrical Construction Materials Directory" for at least 5 years previous to this Contract's bid opening date.

2.02 LIGHTNING PROTECTION SYSTEMS

A. General

1. All components and parts of the lightning protection system shall be as specified herein. The materials used shall meet or exceed the material specification requirements of the Underwriters Laboratories, Inc. All materials shall be marked with a UL label or stamp.

2. The complete lightning protection system shall be inspected and included in the Master Label certification.

B. Conductors

1. Conductors shall be aluminum cable, consisting of a minimum of 24 strands of No. 14 AWG aluminum wire. Copper conductors shall be furnished and installed only where required and when in contact with the earth. Where termination of copper conductors is required to aluminum parts, suitable bi-metallic connectors approved for the purpose shall be furnished and installed.

C. Fittings

1. Fittings shall be the bolted type with stainless steel bolts, nuts, and washers. Fittings shall be of cast metal construction specifically designed for the application. Crimp-type fittings are not acceptable. Bi-metallic type fittings shall be furnished where required.

D. Fasteners

1. Fasteners shall be manufactured from non-corrosive material of ample strength and rigidity for the application.

E. Bases

1. Bases shall be bolted style provided with the model to suit the application (i.e. parapet, standing seam, etc.). Bolts, nuts, and washers shall be made of stainless steel. Bases shall be of aluminum or bronze construction, compatible with the material of the surface to which it is attached. Crimp-type bases are not acceptable.

F. Ground Rods

1. Ground rods shall be 3/4-inch by 10-foot 0-inch rods; as specified in Section 16170, Grounding and Bonding; quantity as required. Ground rods and all associated hardware shall be UL 467 listed.

G. Air Terminals

1. Air terminals shall be solid aluminum. Air terminals shall be tapered or blunt tip type to suit the application and furnished with air terminal bases and safety tips (ball or bullet type) for impalement protection.

H. Thru-Roof Hardware

1. Thru-roof penetrations shall have stainless steel nuts, bolts, and washers. Sealing washers and sealing boots shall be provided as required and shall be compatible with the roofing material. Conductor connections to this roof hardware shall be by bolted connection. Crimp type connections are not acceptable.

PART 3 – EXECUTION

3.01 INSTALLATION

A. The lightning protection system shall be furnished and installed in accordance with the manufacturer's installation instructions. One (1) copy of these instructions shall be included with the system components at time of shipment. The system components shall be suitably protected until accepted by the Owner.

B. The equipment shall be installed in accordance with the manufacturer's recommendations. This shall include, but not be limited to the following:

1. Course all main down conductors to maintain a downward or horizontal run free of pockets or sags. Maintain an eight-inch (8") minimum radius and make no bend greater than 90 degrees. Follow the most direct route with inductance bonding conductors maintaining the horizontal or downward course of the main conductor. Interconnect roof conductors to provide at least two paths to ground from each terminal and to form closed loops. Follow the most direct path possible with down conductors between roof conductors and ground terminals. All down conductors for new occupiable buildings shall be placed in a concealed manner. Down conductors for existing occupiable structures, tanks, basins, and other non-occupiable structures may be installed exposed.

2. Install ground connections at no less than 60-foot intervals and at each down conductor on perimeter. If the structure has a ground grid, the ground rods from that grid may be used for connection to the down conductors. For structures with no ground grid, furnish and install copper grounding ring, connect down conductors to this ring and connect ring to encased electrode. Use #4/0 awg bare, stranded, tin-plated copper grounding wire for grounding ring and connections to concrete encased grounding electrode. Coordinate the timing of this work with concrete work. At each ground connection, determine the extent of the grounding arrangement according to the volume and type of soil encountered and the lowest expected moisture content. Have the Owner's representative observe each ground connection. Bond together all electrical service, telephone service, and lightning protection grounds to all underground metallic piping systems as required by Article 250 of the NEC.

3. The structural steel frame (where provided) may substitute for main down conductors provided the frame is electrically continuous and of adequate cross-section. Where the steel frame is utilized, connect the roof conductor to steel at least as often and at the same column as the ground connections. Make connections to steel with exothermic welds wherever possible. Provide bonding as required to make the entire metal frame continuous.

4. Bond all sizable metal objects within 6-feet of down, roof, or grounding conductors to the system. Use only approved fittings and conductors.

5. Wherever possible problems with corrosion are encountered, use substitute approved materials and/or provide corrosion protection. Use bimetallic or other specially designed and approved connectors where dissimilar metals are to be joined.

6. Install air terminals within 2-feet of the edge of structure and at intervals not greater than 20-feet along perimeter and peak. Provide additional terminals to limit spacing across roof to 50-feet maximum. Bond any exposed metallic object or surface to the roof conductor. Flash all terminal or conductor penetrations in the roof to conform to the roofer's requirements.

7. Record each ground connection location and mark up a reproducible copy of the approved shop drawings with their location. Also, indicate any substantial field modifications on these drawings. These drawings shall be included in the O&M manual.

8. Log all continuity tests of metal framing, facility grounding electrode connections, bonding, and similar connections. Indicate the location of tests or plans. Include test results in the O&M manual.

9. Retain U.L. to make an inspection of the completed installation and issue a Master Label Certification. Furnish a copy of the Certification to the Owner upon receipt.

3.02 TESTING

A. All tests shall be performed in accordance with the requirements of the General Conditions and Division 1. The following tests are required:

1. Certified Shop Tests and Reports

   a. None Required.

2. Field Tests

   a. After installation, the lightning protection system shall be tested for continuity to the facility grounding electrode. The tests shall be made by the lightning protection system installer. Test shall be as follows:

      i. Record the resistance between each down conductor and the facility grounding electrode to ensure a suitable low-resistance connection. All resistance values shall be 1 ohm or less. Test shall

be made after the facility grounding electrode has been installed and tested per the requirements of Section 16170, Grounding and Bonding.

-END OF SECTION-

SECTION 16902

ELECTRIC CONTROLS AND RELAYS

PART 1 – GENERAL

1.01 THE REQUIREMENT

A. The Contractor shall furnish, install, test, and place in satisfactory operation all electric controls and relays as specified herein and indicated on the Drawings.

B. Electrical control and relay systems shall be assembled using NEMA rated components. Components designed and built to International Electrotechnical Commission (IEC) standards are not recognized. Equipment designed, manufactured and labeled in compliance with IEC standards is not acceptable.

C. Reference Section 16000, Basic Electrical Requirements and Section 16195, Electrical Identification.

1.02 CODES AND STANDARDS

A. Products specified herein shall be in conformance with or listed to the following standards as applicable:

1. NEMA 250 – Enclosures for Electrical Equipment

2. UL 508A – Standard for Industrial Control Panels

1.03 SUBMITTALS

A. In accordance with the procedures and requirements set forth in the General Conditions and Section 01300, Submittals, the Contractor shall obtain from the equipment manufacturer and submit the following:

3. Shop Drawings

4. Spare Parts List

B. Each submittal shall be identified by the applicable specification section.

1.04 SHOP DRAWINGS

A. Each submittal shall be complete in all respects, incorporating all information and data listed herein and all additional information required for evaluation of the proposed equipment's compliance with the Contract Documents.

B. Partial, incomplete or illegible submittals will be returned to the Contractor without review for resubmittal.

C. Shop drawings shall include but not be limited to:

1. Product data sheets.

D. The shop drawing information shall be complete and organized in such a way that the Engineer can determine if the requirements of these Specifications are being met. Copies of technical bulletins, technical data sheets from "soft-cover" catalogs, and similar information which is "highlighted" or somehow identifies the specific equipment items the Contractor intends to provide are acceptable and shall be submitted.

1.05 SPARE PARTS

A. All spare parts as recommended by the equipment manufacturer shall be furnished to the City by the Contractor. In addition to the manufacturer recommended spare parts, the following spare parts shall be provided for local control stations:

1. One (1) contact block of each type furnished on the project

2. One (1) indicating light lens of each color furnished on the project

3. One (1) LED lamp of each color furnished on the project

B. The spare parts shall be packed in containers suitable for long term storage, bearing labels clearly designating the contents and the pieces of equipment for which they are intended.

C. Spare parts shall be delivered at the same time as the equipment to which they pertain. The Contractor shall properly store and safeguard such spare parts until completion of the work, at which time they shall be delivered to the City.

D. Spare parts lists, included with the shop drawing submittal, shall indicate specific sizes, quantities, and part numbers of the items to be furnished. Terms such as "1 lot of packing material" are not acceptable.

E. Parts shall be completely identified with a numerical system to facilitate parts control and stocking. Each part shall be properly identified by a separate number. Those parts which are identical for more than one size, shall have the same part number.

PART 2 – PRODUCTS

2.01 CONTROL COMPONENTS

A. Manufacturers

1. Control components shall be manufactured by Eaton, The Square D Company, General Electric, Allen-Bradley, Siemens Energy and Automation, or Engineer approved equal.

B. Pilot Devices

1. General

a. All pilot devices shall be provided with a legend plate. Legend plates shall have a white background and black lettering and indicate the function of the respective pilot device. The text shown on the Drawings or indicated in the specifications shall be used as the basis for legend plate engraving (i.e. HAND-OFF-AUTO, RUN, EMERGENCY STOP, etc).

b. All pilot devices shall be selected and properly installed to maintain the NEMA 250 rating of the enclosure in which they are installed. All pilot devices shall be UL 508 Listed.

c. All pilot devices shall be 30.5mm in diameter, unless otherwise indicated. 22mm devices are not acceptable.

d. Pilot devices for all electrical equipment under this Contract shall be of the same type and manufacturer unless otherwise specified herein or indicated on the Drawings.

2. Pushbuttons

a. Pushbuttons shall be non-illuminated, black in color, and have momentary style operation unless otherwise indicated on the Drawings.

b. Pushbuttons shall have the quantity of normally closed and/or normally open contacts as indicated on the Drawings and as required. In addition to the required contacts, one (1) spare normally open and one (1) spare normally closed contact shall be installed at each pushbutton. Contacts shall be rated for 5A at 250VAC/DC (minimum), but no less than required for the application.

c. Pushbuttons shall be provided with a full guard around the perimeter of the button. Where a lockout style pushbutton is specified or indicated on the Drawings, provide a padlockable guard.

3. Selector Switches

a. Selector switches shall be non-illuminated, black in color, and have the number of maintained positions as indicated on the Drawings and as required. Handles shall be the extended type that provide a greater surface area for operation.

b. Selector switches shall have the quantity of normally closed and/or normally open contacts as indicated on the Drawings and as required. In addition to the required contacts, one (1) spare normally open and one (1) spare normally closed contact shall be installed at each selector switch. Contacts shall be rated for 5A at 250VAC/DC (minimum), but no less than required for the application.

c. Where indicated in the Drawings or Specifications, provide spring return positions.

d. Selector switches shall be provided with an indexing component that fits into the keyed portion of the cutout for the device and prevents the switch from spinning when operated.

4. Indicating Lights

a. Indicating lights shall LED type, with the proper voltage rating to suit the application, and push-to-test feature.

b. Indicating light lens colors shall be as required in equipment specifications and/or as indicated on the Drawings. If lens colors are not indicated, the following colors shall be used:

Red	-	"Run", "On", “Open”
Green	-	"Off", “Closed”
Amber	-	"Alarm", "Fail"
White	-	“Control Power On”

5. Emergency Stop and Tagline Switches

a. Emergency stop switches shall be non-illuminated, red in color, with a minimum 35mm diameter mushroom head. Once activated, switch shall maintain its position and require a manual pull to release/reset.

b. Tagline switches shall have a plunger that activates upon tension from the associated safety cable. Once activated, switch shall maintain its position and require a manual release/reset.

c. Emergency stop and tagline switches shall have the quantity of normally closed and/or normally open contacts as indicated on the Drawings and as required. In addition to the required contacts, one (1) spare normally open and one (1) spare normally closed contact shall be installed at each switch. Contacts shall be rated for 5A at 250VAC/DC (minimum), but no less than required for the application.

6. Relays and Timers

a. General

1) Relays and timers shall be furnished with an integral pilot light for positive indication of coil energization.

2) Relays and timers shall have tubular pin style terminals with matching 11-pin DIN rail mount socket. Spade or blade style terminals are not acceptable.

3) Relays and timers for all electrical equipment under this Contract shall be of the same type and manufacturer unless otherwise specified herein or

indicated on the Drawings.

b. Control and Pilot Relays

1) Miniature or “ice-cube” type relays are not acceptable.

2) Relays shall have coil voltage as required to suit the application and/or as indicated on the Drawings.

3) Relays shall be provided with contacts rated for 10A (resistive), minimum, at 120/240 VAC and 28 VDC. Relays shall have 3-pole, double-throw (3PDT) contact arrangement.

7. Time Delay Relays

a. Timers delay relays shall utilize electronic timing technology. Mechanical timing devices are not acceptable.

b. Relays shall have coil voltage as required to suit the application and/or as indicated on the Drawings.

c. Relays shall be provided with contacts rated for 10A (resistive), minimum, at 120/240 VAC and 28 VDC. Relays shall have double-pole double-throw (DPDT) contact arrangement.

d. Time delay ranges shall be as indicated on the Drawings and/or as required to suit the application. Timing range shall be adjustable from the front of the relay. On delay and off delay timer configurations shall be provided as indicated on the Drawings and/or as required to suit the application.

8. Elapsed Time Meters

a. Elapsed time meters shall be non-resettable type with no less than a 4 digit display. Coil voltage shall be as required to suit the application and/or as indicated on the Drawings.

C. Control Terminal Blocks

1. Control terminal blocks shall be assembled on non-current carrying galvanized steel DIN mounting rails securely bolted to the enclosure or subpanel. Terminals shall be tubular screw type with pressure plate that will accommodate wire size range of #22 - #8 AWG.

2. Control terminal blocks shall be single tier with a minimum rating of 600 volts and 20A. Separate terminal strips shall be provided for each type of control used (i.e. 120VAC vs. 24VDC). Quantity of terminals shall be provided as required to suit the application. In addition, there shall be a sufficient quantity of terminals for the termination of all spare conductors.

3. Terminals shall be marked with a permanent, continuous marking strip, with each terminal numbered. One side of each terminal shall be reserved exclusively for incoming field conductors. Common connections and jumpers required for internal wiring shall not be made on the field side of the terminal.

2.02 LOCAL CONTROL STATIONS

A. Local control stations shall be furnished and installed complete with pushbuttons, selector switches, indicating lights, and other devices as indicated on the Drawings.

B. Specific devices installed in local control stations shall be provided in accordance with the requirements specified elsewhere in this Section.

C. In non-hazardous locations, local control stations shall be furnished with the following enclosure type and material of construction, dependent upon the designation of the area in which they are to be installed. Area designations are indicated on the Drawings.

AREA DESIGNATION	**ENCLOSURE TYPE AND MATERIAL**
Indoor Dry Non-Process Area	NEMA 12, Die Cast Zinc
All Outdoor Areas	NEMA 4X, Type 316 Stainless Steel

D. Local control stations for use in non-hazardous locations shall be UL-508 Listed.

E. Provide a nameplate on each local control station in accordance with Section 16195, Electrical Identification. The name and/or number of the equipment associated with each control station shall be engraved on the nameplate, followed by the words “LOCAL CONTROL STATION”.

PART 3 – EXECUTION

3.01 INSTALLATION

A. Local control stations shall be provided in the enclosure type and material of construction required for the area in which it is installed. Reference the requirements in Part 2 herein, and the area designations indicated on the Drawings.

B. All control components shall be mounted in a manner that will permit servicing, adjustment, testing, and removal without disconnecting, moving, or removing any other component. Components mounted on the inside of panels shall be mounted on removable plates and not directly to the enclosure. Mounting shall be rigid and stable unless shock mounting is required otherwise by the manufacturer to protect equipment from vibration. Component's mounting shall be oriented in accordance with the component manufacturer's and industries' standard practices.

C. Pilot devices shall be properly bonded to the equipment enclosure door where they are installed. If proper bonding cannot be achieved through the locknuts that affix the device in place, a green colored bonding screw shall be provided on the pilot device. The bonding

screw shall be bonded to the equipment enclosure through the use of an insulated green bonding conductor.

D. Local control station covers shall be bonded to the local control station enclosure through the use of an insulated green bonding conductor.

E. Wiring to devices at each local control station shall be provided with enough slack to permit the local control station cover to be removed and pulled at least 6 inches away from the enclosure.

F. Terminal strips, relays, timers, and similar devices shall not be installed on the rear of the panel/cabinet doors. Terminal strips, relays, timers, and similar devices shall not be installed on the side walls of panel/cabinet interiors without written permission from the Engineer.

- END OF SECTION -

DIVISION 17 – INSTRUMENTATION

SECTION 17000

CONTROL AND INFORMATION SYSTEM SCOPE AND GENERAL REQUIREMENTS

PART 1 – GENERAL

1.01 SCOPE

A. The Contractor shall provide, through the services of an instrumentation and control system subcontractor, all components, system installation services, as well as all required and specified ancillary services in connection with the Instrumentation, Control and Information System. The System includes all materials, labor, tools, fees, charges and documentation required to furnish, install, test and place in operation a complete and operable instrumentation, control and information system as shown and/or specified. The system shall include all measuring elements, signal converters, transmitters, local control panels, digital hardware and software, wireless communication systems, signal and data transmission systems, interconnecting wiring and such accessories as shown, specified, and/or required to provide the functions indicated.

B. The scope of the work to be performed under this Division includes but is not limited to the following:

1. The Contractor shall retain overall responsibility for the instrumentation and control system as specified herein.

2. Furnish and install process instrumentation and associated taps and supports as scheduled or shown on the Drawings, unless otherwise noted or supplied by equipment vendors.

3. Furnish and install pump station LCPs (local control panels) as shown on the Drawings and as specified in Division 17.

4. Furnish and install digital control system hardware and software as specified in Division 17.

5. Final termination and testing of all instrumentation and control system signal wiring and power supply wiring at equipment furnished under Division 17.

6. Furnish, install and terminate all instrumentation and control system communication cables, including but not limited to Ethernet cables (CAT6) and fiber optic cables.

7. Furnish and install surge protection devices for all digital equipment, local control panels, and instrumentation provided under this Division, including connections to grounding system(s) provided under Division 16.

8. Coordinate grounding requirements with the electrical subcontractor for all digital equipment, local control panels, cellular radio systems and instrumentation provided

under this Division. Terminate grounding system cables at all equipment provided under this Division.

9. Provide system testing, calibration, training and startup services as specified herein and as required to make all systems fully operational.

C. It is the intent of the Contract Documents to construct a complete and working installation. Items of equipment or materials that may reasonably be assumed as necessary to accomplish this end shall be supplied whether or not they are specifically stated herein.

1.02 RELATED ITEMS

A. Field mounted switches, limit switches, gauges, valve and gate operator position transmitters, sump pump controls and other instrumentation and controls furnished with mechanical or electrical equipment not listed in the instrument schedule shall be furnished, installed, tested and calibrated as specified under other Divisions.

B. Additional and related work performed under Division 16 includes the following:

1. Instrument A.C. power source and disconnect switch for process instrumentation, A.C. grounding systems, and A.C. power supplies for all equipment, control panels and accessories furnished under Division 17.

2. Conduit and raceways for all instrumentation and control system signal wiring, grounding systems, special cables and communication network cables.

3. Instrumentation and control system signal wiring.

4. Install control system communication network cables.

5. Furnish and install grounding systems for all digital equipment, local control panels, and cellular radio systems, and instrumentation provided under Division 17. Grounding systems shall be complete to the equipment provided under Division 17, ready for termination by the instrumentation subcontractor.

6. Termination of all instrumentation and control system signal wiring at all equipment furnished under other divisions of the Specifications.

7. Final wiring and termination to A.C. grounding systems and to A.C. power sources (e.g. panelboards, motor control centers, and other sources of electrical power).

1.03 GENERAL INFORMATION AND DESCRIPTION

A. Where manufacturers are named for a particular item of equipment, it is intended as a guide to acceptable quality and performance and does not exempt such equipment from the requirements of these Specifications or Drawings.

B. In order to centralize responsibility, it is required that all equipment (including field instrumentation and control system hardware and software) offered under this Division shall be furnished and installed by the instrumentation subcontractor, or under the

supervision of the instrumentation subcontractor, who shall assume complete responsibility for proper operation of the instrumentation and control system equipment, including that of coordinating all signals, and furnishing all appurtenant equipment.

C. The Contractor shall retain total responsibility for the proper detailed design, fabrication, inspection, test, delivery, assembly, installation, activation, checkout, adjustment and operation of the entire instrumentation and control system as well as equipment and controls furnished under other Divisions of the Specifications. The Contractor shall be responsible for the delivery of all detailed drawings, manuals and other documentation required for the complete coordination, installation, activation and operation of mechanical equipment, equipment control panels, local control panels, field instrumentation, control systems and related equipment and/or systems and shall provide for the services of a qualified installation engineer to supervise all activities required to place the completed facility in stable operation under full digital control.

D. The instrumentation and control system shall be capable of simultaneously implementing all real-time control and information system functions, and servicing all operator service requests as specified, without degrading the data handling and processing capability of any system component.

E. Control system inputs and outputs are listed in the Input/Output Schedule, Section 17920. This information, together with the functional control descriptions, process and instrumentation diagrams, and electrical control schematics, describes the real-time monitoring and control functions to be performed. In addition, the system shall provide various man/machine interface and data reporting functions as specified in the software sections of this Specification.

F. The mechanical, process, and electrical drawings indicate the approximate locations of field instruments, control panels, systems and equipment as well as field-mounted equipment provided by others. The instrumentation subcontractor shall examine the mechanical, process and electrical drawings to determine actual size and locations of process connections and wiring requirements for instrumentation and controls furnished under this Contract. The instrumentation subcontractor shall inspect all equipment, panels, instrumentation, controls and appurtenances either existing or furnished under other Divisions of the Specifications to determine all requirements to interface same with the control and information system. The Contractor shall coordinate the completion of any required modifications with the associated supplier of the item furnished.

G. The instrumentation subcontractor shall review and approve the size and routing of all instrumentation and control cable and conduit systems furnished by the electrical subcontractor for suitability for use with the associated cable system.

H. The Contractor shall coordinate the efforts of each supplier to aid in interfacing all systems. This effort shall include, but shall not be limited to, the distribution of approved shop drawings to the electrical subcontractor and to the instrumentation subcontractor furnishing the equipment under this Division.

I. The Contractor shall be responsible for providing a signal transmission system free from electrical interference that would be detrimental to the proper functioning of the instrumentation and control system equipment.

J. The City shall have the right of access to the subcontractor's facility and the facilities of his equipment suppliers to inspect materials and parts; witness inspections, tests and work in progress; and examine applicable design documents, records and certifications during any stage of design, fabrication and tests. The instrumentation subcontractor and his equipment suppliers shall furnish office space, supplies and services required for these surveillance activities.

K. The terms "Instrumentation", "Instrumentation and Control System", and "Instrumentation, Control and Information System" shall hereinafter be defined as all equipment, labor, services and documents necessary to meet the intent of the Specifications.

1.04 INSTRUMENTATION AND CONTROL SYSTEM SUBCONTRACTORS

A. Instrumentation and control system subcontractors shall be regularly engaged in the detailed design, fabrication, installation, and startup of instrumentation, controls and telemetry for stormwater or wastewater collection and conveyance systems.

B. Instrumentation and control system subcontractors shall have a minimum of five years of such experience and shall have completed a minimum of three projects of similar type and size as that specified herein. As used herein, the term “completed” shall mean that a project has been brought to final completion and final payment has been made.

C. The instrumentation and control system subcontractor shall have successfully completed at least three (3) or more projects that required the following:

1. PLC logic development for stormwater or wastewater pump station control systems equipped with Rockwell Automation Allen-Bradley Compact Logix or Control Logix PLCs.

2. HMI graphics development for stormwater or wastewater pump station control systems equipped with Rockwell Automation Allen-Bradley Panelview HMIs using Factory Talkview software.

D. The instrumentation and control system subcontractor shall have successfully completed at least one (1) or more projects that required the following:

1. Cellular radio/router configuration.

1.05 DEFINITIONS

A. Solid State: Wherever the term solid state is used to describe circuitry or components in the Specifications, it is intended that the circuitry or components shall be of the type that convey electrons by means of solid materials such as crystals or that work on magnetic principles such as ferrite cores. Vacuum tubes, gas tubes, slide wires, mechanical relays, stepping motors or other devices will not be considered as satisfying the requirements for solid state components of circuitry.

B. Bit or Data Bit: Whenever the terms bit or data bit are used in the Specification, it is intended that one bit shall be equivalent to one binary digit of information. In specifying

data transmission rate, the bit rate or data bit rate shall be the number of binary digits transmitted per second and shall not necessarily be equal to either the maximum pulse rate or average pulse rate.

C. Integrated Circuit: Integrated circuit shall mean the physical realization of a number of circuit elements inseparably associated on or within a continuous body to perform the function of a circuit.

D. Mean Time Between Failures (MTBF): The MTBF shall be calculated by taking the number of system operating hours logged during an arbitrary period of not less than six months and dividing by the number of failures experienced during this period plus one.

E. Mean Time to Repair (MTTR): The MTTR shall be calculated by taking the total system down time for repair over an arbitrary period of not less than six months coinciding with that used for calculation of MTBF and dividing by the number of failures causing down time during the period.

F. Availability: The availability of a non-redundant device or system shall be related to its MTBF and MTTR by the following formula:

A = 100 x (MTBF/(MTBF + MTTR)) Percent

The availability of a device or system provided with an automatically switched backup device or system shall be determined by the following formula:

A = A2 + 1 - ((1-A1) x (1-A1))

where:

A1 = availability of non-redundant device or system
A2 = availability of device or system provided with an automatically switched backup device or system

G. Abbreviations: Specification abbreviations include the following:

A	-	Availability
ADC	-	Analog to Digital Converter
AI	-	Analog Input
AO	-	Analog Output
AVAIL	-	Available
BCD	-	Binary Coded Decimal
CSMA/CD	-	Carrier Sense Multiple Access/Collision Detect
CPU	-	Central Processing Unit
CRC	-	Cyclic Redundancy Check
CRT	-	Cathode Ray Tube

CS	-	Control Strategy
DAC	-	Digital to Analog Converter
DBMS	-	Data Base Management System
DI	-	Discrete Input
DMA	-	Direct Memory Access
DO	-	Discrete Output
DPDT	-	Double Pole, Double Throw
DVE	-	Digital to Video Electronics
EPROM	-	Erasable, Programmable Read Only Memory
FDM	-	Frequency Division Multiplexing
FSK	-	Frequency Shift Keyed
HMI	-	Human Machine Interface (Software)
I/O	-	Input/Output
LAN	-	Local Area Network
LDFW	-	Lead-Follow
MCC	-	Motor Control Center
MTBF	-	Mean Time Between Failures
MTTR	-	Mean Time To Repair
OS	-	Operating System
PAC	-	Programmable Automation Controller
PCB	-	Printed Circuit Board
PID	-	Proportional Integral and Derivative Control
PLC	-	Programmable Logic Controller
PROM	-	Programmable Read Only Memory
RAM	-	Random Access Memory
RDY	-	Ready
RMSS	-	Root Mean Square Summation
RNG	-	Running
ROM	-	Read Only Memory
RTU	-	Remote Telemetry Unit
SPDT	-	Single Pole, Double Throw
ST/SP	-	Start/Stop
TDM	-	Time Division Multiplexing
UPS	-	Uninterruptible Power Supply

H. To minimize the number of characters in words used in textual descriptions on CRT displays, printouts and nameplates, abbreviations may be used subject to the Engineer's approval. If a specified abbreviation does not exist for a particular word, an abbreviation may be generated using the principles of masking and or vowel deletion. Masking involves retaining the first and last letters in a word and deleting one or more characters (usually vowels) from the interior of the word.

1.06 ENVIRONMENTAL CONDITIONS

A. Instrumentation equipment and enclosures shall be suitable for ambient conditions specified. All system elements shall operate properly in the presence of telephone lines, power lines, and electrical equipment.

B. Inside control rooms and climate-controlled electrical rooms, the temperature will normally be 20 to 25 degrees C; relative humidity 40 to 80 percent without condensation and the air will be essentially free of corrosive contaminants and moisture. Appropriate air filtering shall be provided to meet environmental conditions (i.e., for dust).

C. Other indoor areas may not be air conditioned/heated; temperatures may range between 0 and 40 degrees C with relative humidity between 40 and 95 percent.

D. Field equipment including instrumentation and panels may be subjected to wind, rain, lightning, and corrosives in the environment, with ambient temperatures from -20 to 40 degrees C and relative humidity from 10 to 100 percent. All supports, brackets, interconnecting hardware, and fasteners shall be aluminum, type 316 stainless steel, or metal alloy as otherwise suitable for chemical resistance within chemical feed/storage areas shown on the installation detail drawings.

PART 2 – PRODUCTS

2.01 NAMEPLATES

A. All items of equipment listed in the instrument schedule, control panels, and all items of digital hardware shall be identified with nameplates. Each nameplate shall be located so that it is readable from the normal observation position and is clearly associated with the device or devices it identifies. Nameplates shall be positioned so that removal of the device for maintenance and repair shall not disturb the nameplate. Nameplates shall include the equipment identification number and description. Abbreviations of the description shall be subject to the Engineer's approval.

B. Nameplates shall be made of 1/16-inch thick machine engraved laminated phenolic plastic having white numbers and letters not less than 3/16-inch high on a black background.

C. Nameplates shall be attached to metal equipment by stainless steel screws and to other surfaces by an epoxy-based adhesive that is resistant to oil and moisture. In cases where the label cannot be attached by the above methods, it shall be drilled and attached to the associated device by means of stainless steel wire.

PART 3 – EXECUTION

3.01 SCHEDULE OF PAYMENT

A. Payment to the Contractor for Control and Information System materials, equipment, and labor shall be in accordance with the General and Supplementary Conditions. The schedule of values submitted as required by the General and Supplementary Conditions shall reflect a breakdown of the work required for completion of the Control and Information System. The breakdown shall include sufficient detail to permit the Engineer to administer payment for the Control and Information System as outlined below.

B. The following payment schedule defines project milestones that will be used for establishing maximum partial payment amounts for the Control and Information System. Payment for field instruments, field wiring, fiber optic network cable and similar items will be made in addition to the payment for the scopes of services incorporated into the schedule below.

Task Completed	**Maximum Cumulative % Request for Payment**
Mobilization	3%
Preliminary Design Review	5%
Approved Submittals	20%
Hardware Purchase (excludes field instruments)	40%
Factory Acceptance Test	60%
Loop Checkout	70%
Control System Start-up and Test	80%
Pump Station Start-up	90%
Final System Acceptance Test	95%
Final Acceptance	100%

C. Requests for payment for materials and equipment that are not installed on site, but are required for system construction and the factory acceptance test (e.g., digital hardware), or are properly stored as described in the General and Supplementary Conditions and herein, shall be accompanied by invoices from the original supplier to the instrumentation subcontractor substantiating the cost of the materials or equipment.

D. Any balance remaining within the schedule of values for field instruments and other materials installed on the site, or for other materials for which payment is made by invoice, will be considered due upon completion of the Final Acceptance test.

3.02 CLEANING

A. The Contractor shall thoroughly clean all soiled surfaces of installed equipment and materials.

B. Upon completion of the instrumentation and control work, the Contractor shall remove all surplus materials, rubbish, and debris that has accumulated during the construction work. The entire area shall be left neat, clean, and acceptable to the City.

3.03 FINAL ACCEPTANCE

A. Final acceptance of the Instrumentation, Control and Information System will be determined complete by the Engineer, and shall be based upon the following:

1. Receipt of acceptable start up completion and availability reports and other documentation as required by the Contract Documents.

2. Completion of the Availability Demonstration.

3. Completion of all specified control system training requirements.

4. Completion of all punch-list items that are significant in the opinion of the Engineer.

B. Final acceptance of the System shall mark the beginning of the extended warranty period.

- END OF SECTION -

SECTION 17015

PRELIMINARY DESIGN REVIEW

PART 1 – GENERAL

1.01 THE REQUIREMENT

A. The Contractor shall conduct a preliminary design review meeting for City personnel and the Engineer to ensure design compliance with all hardware and software requirements in the Contract Documents. Other supplemental design review meetings may be held as required by the Engineer or the City to resolve specific problems, to provide positive assurance to the City that the design conforms to contractual requirements, or to allow for concurrent planning activities by the City that are dependent upon the as-built system configuration/operation.

B. The Preliminary Design Review shall, at the discretion of the City, be conducted at the City's facility, the Contractor's facility, or at a location suggested by the City.

C. The Preliminary Design Review shall be conducted no later than 60 days after notice to proceed.

1.02 PRELIMINARY DESIGN REVIEW

A. The Preliminary Design Review (PDR) shall be a formal meeting to review the overall system design with emphasis being placed upon the arrangement and interactive operation of all items of digital equipment.

B. While the Preliminary Design Review is a meeting rather than a submittal, to the greatest extent possible all data to be presented at the PDR shall be furnished to the City two (2) weeks prior to the meeting date. Data made available by the Contractor shall include, but not be limited to the following:

1. Overall system block diagram(s), and preliminary digital hardware placement, preliminary console and equipment panel arrangements and layouts.

2. A brief functional description of the block diagram(s) shall be provided. The functional description shall describe the overall system operation, interaction between system elements, fail-over procedures and system/operator interactions.

3. A listing of the manufacturer's name and model number for each item of hardware shown in the block diagram(s), all analog instruments and auxiliary equipment such as power supplies.

4. The following software information:

   a. Brief overall description of software design and organization.

   b. List and description of all system software.

   c. List and description of all process control system software.

5. Brief description of the intended plan for implementing system development, assembly, checkout, hardware/software performance verification, installation, activation and factory test activities.

6. Identification of critical engineering activities and long lead-time procurement items.

7. Preliminary construction schedule, including submittal dates.

8. A copy of the proposed System Maintenance Contract.

9. Resumes listing qualifications of process control system engineering and technical personnel (including field installation personnel) expected to be assigned to the project, together with an estimate of the percentage of time such personnel are expected to devote to the project.

PART 2 – PRODUCTS

(NOT USED)

PART 3 – EXECUTION

(NOT USED)

- END OF SECTION -

SECTION 17030

CONTROL AND INFORMATION SYSTEM SUBMITTALS

PART 1 – GENERAL

1.01 THE REQUIREMENT

A. The Contractor shall submit for review complete Shop Drawings for all equipment in accordance with the General Conditions and Division 1 of the Specifications. All submittal material shall be complete, legible, and reproducible, and shall apply specifically to this project.

B. **The instrumentation subcontractor shall organize each Division 17 shop drawing submittal with a table of contents that lists each major sections of the submittal. Each section shall be arranged by the appropriate Division 17 specification section and shall include a list of all instruments, control system hardware, network hardware or software contained in that specific section of the submittal.**

Example: For surge suppressors included in the local control panel submittal there shall be a section titled “Surge Suppressors – Section 17565”. In the same submittal, pushbuttons and switches should be listed under a section titled “Panel Instruments and Accessories – Section 17550”.

1.02 RELATED WORK SPECIFIED ELSEWHERE

A. Section 01300 – Submittals

B. Section 17000 – Control and Information System Scope and General Requirements

1.03 DIGITAL HARDWARE SUBMITTALS

A. Submit system block diagram(s) showing:

1. All equipment to be provided.
2. All interconnecting cable.
3. Equipment names, manufacturer, and model numbers.
4. Equipment locations.

B. Submit information for all digital equipment including, but not limited to, the following:

1. Bill of materials with equipment names, manufacturers, complete model numbers and locations.
2. Catalog cuts, including complete part number breakdown information.

3. Complete technical, material and environmental specifications.

4. Assembly drawings.

5. Mounting requirements.

6. Color samples.

7. Nameplates.

8. Environmental requirements during storage and operation.

1.04 SOFTWARE SUBMITTALS

A. Software submittals shall include the following as a minimum:

1. Bill of materials with software names, vendors, and complete listings of included software modules.

2. Standard manufacturer's literature describing the products.

3. Description of function of software in Control and Information System.

4. Limitations or constraints of software.

5. Minimum system (processor and memory) requirements.

6. Operation and maintenance requirements.

B. Submit information on the following software:

1. Third-party software, including:

a. Operating system.

b. Operator workstation (SCADA or HMI) software, including all add-in software provided to perform specific functions (alarm dialers, schedulers, backup creation software, etc.).

c. Office-type products, such as spreadsheets, word processors, etc.

d. Database management software.

e. Communication software, including all applicable local and wide area network software.

f. Programmable controller programming software (where applicable).

2. Software configuration, including:

   a. Graphic display organization.

   b. Database configuration for operator workstations and database management system.

   c. Trends.

   d. System security.

   e. Formats for all reports, including all required calculations.

   f. Intercommunications between software products required to implement system functions.

   g. Equipment backup configuration and requirements.

C. Control Strategies

1. Provide control strategy documentation that includes control strategy diagrams (block oriented logic and ladder logic diagrams, as appropriate) to describe the control of all processes. The written description shall follow the format of the functional control descriptions contained herein. The control strategy submittals shall contain the following as a minimum:

   a. An overall description of the program structure and how it will meet the specified control requirements.

   b. A listing of the program.

   c. Extensive comments in the listings to describe program steps.

   d. Equation and ladder program derivations for all specified control routines.

   e. Resource (processor and memory) requirements.

   f. A listing of inputs and outputs to the control strategy.

D. Application Software

1. Provide application software documentation that contains program descriptions for the operation, modification, and maintenance of all application programs provided for the digital system.

2. Application software includes all custom routines developed specifically for this project, or pre-written routines used for accomplishing specified functions for this project. This shall include any add-in custom software.

E. Graphic Displays

1. Submit all graphic displays required to perform the control and operator interface functions specified herein.

2. Submit the complete set of graphic displays for review by the City and the Engineer at least 60 days prior to commencement of factory testing.

3. Where a large number of graphic displays are required, submit an initial set of example displays for review before the complete set of displays is submitted. This initial set shall include examples of all basic graphic display design features and parameters, and is intended to allow the Contractor to obtain preliminary approval of these features and parameters prior to beginning main graphic display production.

4. The Contractor shall allow for one major cycle of revisions to the displays prior to factory testing and one minor cycle of revisions following factory test. A cycle of revisions shall be defined as all revisions necessary to complete a single set of changes marked by the Engineer and the City. Additional corrections shall be performed during start-up as required to accommodate changes required by actual field conditions, at no additional cost to the City.

5. Two of the required submittals in each revision cycle shall be full color prints of the entire set of displays. Additional sets may be in black-and-white or gray-scale.

6. Displays shall be printouts of actual process graphics implemented in the system.

1.05 CONTROL PANEL SUBMITTALS

A. Submittals shall be provided for all control panels, and shall include:

1. Exterior panel drawings with front and side views, to scale.

2. Interior layout drawings showing the locations and sizes of all equipment and wiring mounted within the cabinet, to scale.

3. Panel area reserved for cable access and conduit entry.

4. Location plans showing each panel in its assigned location.

B. Submit information for all exterior and interior panel mounted equipment including, but not limited to, the following:

1. Bill of materials with equipment names, manufacturers, complete model numbers and locations.

2. Catalog cuts, including complete part number breakdown information.

3. Complete technical, material and environmental specifications.

4. Assembly drawings.

5. Mounting requirements.

6. Color samples.

7. Nameplates.

8. Environmental requirements during storage and operation.

C. Submit panel wiring diagrams showing power, signal, and control wiring, including surge protection, relays, courtesy receptacles, lighting, wire size and color coding, etc.

1.06 INSTRUMENT SUBMITTALS

A. Submit information on all field instruments, including but not limited to the following:

1. Product (item) name and tag number used herein and on the Contract Drawings.

2. Catalog cuts, including complete part number breakdown information.

3. Manufacturer's complete model number.

4. Location of the device.

5. Input - output characteristics.

6. Range, size, and graduations.

7. Physical size with dimensions, NEMA enclosure classification and mounting details.

8. Materials of construction of all enclosures, wetted parts and major components.

9. Instrument or control device sizing calculations where applicable.

10. Certified calibration data on all flow metering devices.

11. Environmental requirements during storage and operation.

12. Associated surge protection devices.

1.07 WIRING AND LOOP DIAGRAMS

A. Submit interconnection wiring and loop diagrams for all panels and signals in the Control and Information System.

B. Electrical interconnection diagrams shall show all terminations of equipment, including terminations to equipment and controls furnished under other Divisions, complete with equipment and cable designations. Where applicable, interconnection wiring diagrams shall be organized by input/output card. Interconnecting diagrams shall be prepared in a neat and legible manner on 11 X 17-inch reproducible prints.

C. Loop drawings shall conform to the latest version of ISA Standards and Recommended Practices for Instrumentation and Control. Loop Drawings shall conform to ISA S5.4, Figures 1-3, Minimum Required Items.

D. Loop drawings shall not be required as a separate document provided that the interconnecting wiring diagrams required in Paragraph B., above, contain all information required by ISA 5.4.

1.08 OPERATION AND MAINTENANCE MANUALS

A. The Contractor shall deliver equipment operation and maintenance manuals in compliance with Section 01300 - Submittals. Operation and maintenance (O&M) manuals shall consist of two basic parts:

1. Manufacturer standard O&M manuals for all equipment and software furnished under this Division.

2. Custom O&M information describing the specific configuration of equipment and software, and the operation and maintenance requirements for this particular project.

B. The manuals shall contain all illustrations, detailed drawings, wiring diagrams, and instructions necessary for installing, operating, and maintaining the equipment. The illustrated parts shall be numbered for identification. All modifications to manufacturer standard equipment and/or components shall be clearly identified and shown on the drawings and schematics. All information contained therein shall apply specifically to the equipment furnished and shall only include instructions that are applicable. All such illustrations shall be incorporated within the printing of the page to form a durable and permanent reference book.

C. The manuals shall be prepared specifically for this installation and shall include all required cuts, drawings, equipment lists, descriptions, etc. that are required to instruct operation and maintenance personnel unfamiliar with such equipment. The maintenance instructions shall include troubleshooting data and full preventive maintenance schedules. The instructions shall be bound in locking 3-D-ring binders with bindings no larger than 3.5 inches. The manuals shall include 15% spare space for the addition of future material. The instructions shall include drawings reduced or folded and shall provide the following as a minimum.

1. A comprehensive index.

2. A functional description of the entire system, with references to drawings and instructions.

3. A <u>complete</u> "as-built" set of <u>all</u> approved shop drawings, which shall reflect all work required to achieve final system acceptance.

4. A complete list of the equipment supplied, including serial numbers, ranges, and pertinent data.

5. Full specifications on each item.

6. Detailed service, maintenance, and operation instructions for each item supplied.

7. Special maintenance requirements particular to this system shall be clearly defined, along with special calibration and test procedures.

8. Complete parts lists with stock numbers and name, address, and telephone number of the local supplier.

9. References to manufacturers' standard literature where applicable.

10. Warning notes shall be located throughout the manual where such notes are required to prevent accidents or inadvertent misuse of equipment.

D. The operating instructions shall clearly describe the step-by-step procedures that must be followed to implement all phases of all operating modes. The instructions shall be in terms understandable and usable by operating personnel and maintenance crews and shall be useful in the training of such personnel.

E. The maintenance instructions shall describe the detailed preventive and corrective procedures required, including environmental requirements during equipment storage and system operation, to keep the System in good operating condition. All hardware maintenance documentation shall make reference to appropriate diagnostics, where applicable, and all necessary wiring diagrams, component drawings and PCB schematic drawings shall be included.

F. The hardware maintenance documentation shall include, as a minimum, the following information:

1. Operation Information - This information shall include a detailed description of how the equipment operates and a block diagram illustrating each major assembly in the equipment.

2. Preventive-Maintenance Instructions - These instructions shall include all applicable visual examinations, hardware testing and diagnostic routines, and the adjustments necessary for periodic preventive maintenance of the System.

3. Corrective-Maintenance Instructions - These instructions shall include guides for locating malfunctions down to the card-replacement level. These guides shall include adequate details for quickly and efficiently locating the cause of an equipment malfunction and shall state the probable source(s) of trouble, the symptoms, probable cause, and instructions for remedying the malfunction.

4. Parts Information - This information shall include the identification of each replaceable or field-repairable component. All parts shall be identified on a list in a drawing; the identification shall be of a level of detail sufficient for procuring any repairable or replaceable part. Cross-references between equipment numbers and manufacturer's part numbers shall be provided.

G. Software documentation shall conform to a standard format and shall include, but not be limited to, the following:

1. A program abstract that includes:

   a. Program Name - The symbolic alphanumeric program name.

   b. Program Title - English text identification.

   c. Program Synopsis - A brief text shall be provided that specifies the need for the program, states when it shall be used and functionally describes all inputs, outputs and functions performed. This descriptive text shall be written in a language that is understandable by nonsoftware oriented readers.

2. A program description that shall include, but not be limited to, the following:

   a. Applicable Documents - List all documents (standard manufacturer's literature, other program descriptions, etc.) by section, if practical, that apply to the program. One complete copy of all applicable reference material shall be provided.

   b. Input-Output - Identify each input and output parameter, variable, and software element used by the program. State the purpose of all inputs, outputs, and variables.

   c. Processing - This section shall contain a description of the overall structure and function of the program. Describe the program run stream and present a detailed description of how the program operates. Describe the timing and sequencing of operations of the program relative to other programs. Describe all interactions with other programs. Processing logic that is not readily described without considerable background information shall be handled as a special topic with references to an appendix or to control strategy document that details the necessary information. Reference shall also be made to an appendix or control strategy document for equation and program algorithm derivations.

   d. System Configuration - Describe in detail the system configuration or status required for program implementation, if appropriate.

   e. Limitations and Constraints - Summarize all known or anticipated limitations of the program, if appropriate.

   f. Storage - Define program storage requirements in terms of disk or RAM memory allocation.

   g. Verification - Describe, as a minimum, a test that can be used by the operator to assure proper program operation. Define the required system configuration, input requirements and criteria for successful test completion.

h. Diagnostics - Describe all program diagnostics, where applicable. Descriptions shall list each error statement, indicate clearly what it means, and specify what appropriate actions should be taken.

i. Malfunction Procedures - Specify procedures to follow for recovering from a malfunction due to either operator error or other sources.

1.09 FINAL SYSTEM DOCUMENTATION

A. All documentation shall be delivered to the City prior to final system acceptance in accordance with the Contract Documents. As a minimum, final documentation shall contain all information originally part of the control system submittals.

B. If any documentation or other technical information submitted is considered proprietary, such information shall be designated. Documentation or technical information which is designated as being proprietary will be used only for the construction, operation, or maintenance of the System and, to the extent permitted by law, will not be published or otherwise disclosed.

C. Provide a complete set of detailed electrical interconnection diagrams required to define the complete instrumentation and control system. All diagrams shall be 11 X 17-inch original reproducible prints. All diagrams shall be corrected so as to describe final "as-built" hardware configurations and to reflect the system configuration and control methodology adopted to achieve final system acceptance.

D. Provide system software documentation for the operation and maintenance of all system software programs provided as a part of the digital system. All system software documentation shall be amended as required to delineate all modifications and to accurately reflect the final as-built software configurations.

E. Provide application software documentation that contains program descriptions for the operation, modification, and maintenance of all application programs provided for the digital system.

F. Provide control strategy documentation which shall include control strategy (block oriented or ladder logic) diagrams to describe the control of all processes. Control strategy documentation shall reflect the system configuration and control methodology adopted to achieve final system acceptance. Control strategy documentation shall conform to the submittal requirements listed hereinabove.

G. O&M documentation shall be amended with all final, adjusted values for all setpoints and other operating parameters for City reference.

H. The City recognizes the fact that not all possible problems related to real-time events, software interlocks, and hardware maintenance and utilization can be discovered during the Acceptance Tests. Therefore, the instrumentation subcontractor through the Contractor shall investigate, diagnose, repair, update, and distribute all pertaining documentation of the deficiencies that become evident during the warranty period. All such documentation shall be submitted in writing to the City within 30 days of identifying and solving the problem.

1.10 PROGRAMS AND SOURCE LISTINGS

A. Provide one copy of all standard, of-the-shelf system and application software (exclusive of firmware resident software) on original media furnished by the software manufacturer.

B. Provide one copy of source listings on optical media for all custom software written specifically for this facility, all database files configured for this facility, and all control strategies. All source listings shall include a program abstract, program linkage and input/output data. Comments describing the program flow shall be frequently interspersed throughout each listing.

1.11 SUBMITTAL/DOCUMENTATION FORMAT

A. All drawing-type submittals and documentation shall be rendered and submitted in the latest version of AutoCAD.

B. All textual-type submittals and documentation shall be rendered and submitted in the latest version of Microsoft Word or in Searchable Adobe Portable Document Format (.pdf).

1.12 ELECTRONIC O&M MANUALS

A. Subject to acceptance by the City and Engineer, the O&M information may be submitted in part or in whole in an electronic format on optical media.

B. Electronic O&M manuals shall contain information in standard formats (Searchable Adobe PDF, Word, AutoCAD, HTML, etc.) and shall be easily accessible through the use of standard, “off-the-shelf” software such as an Internet browser.

PART 2 – PRODUCTS

(NOT USED)

PART 3 – EXECUTION

(NOT USED)

- END OF SECTION -

SECTION 17040

CONTROL AND INFORMATION SYSTEM TRAINING REQUIREMENTS

PART 1 – GENERAL

1.01 THE REQUIREMENT

A. To familiarize the City's personnel with the process control system and field instrumentation, training shall be provided as detailed hereunder.

1.02 RELATED WORK SPECIFIED ELSEWHERE

A. Section 17000 – Control and Information System Scope and General Requirements

1.03 SUBMITTALS

A. A minimum of 60 days prior to beginning training, submit a detailed training plan describing the following:

1. A listing of all courses to be conducted.

2. Course content.

3. Applicability of each course to management, operations, maintenance, laboratory, etc., personnel.

4. Course schedules.

5. Qualifications and experience of individual(s) providing training.

B. A minimum of 14 days prior to beginning each training course, submit documentation for use by the City's personnel during training. The training documentation shall be specific to the particular course, and shall include the following:

1. A listing of all subjects to be covered.

2. Course schedule.

3. Documentation/lesson plans covering all subjects to be covered during the course instruction. Information shall be in a "how to" format, with sufficient background documentation and references to manufacturer literature to provide a thorough and clear understanding of the materials to be covered.

1.04 GENERAL REQUIREMENTS

A. All costs of providing the training courses shall be borne by the Contractor.

B. As used herein, the term "day" shall mean an eight-hour day, and the term "week" shall mean a five-day, 40-hour week.

C. Training courses, especially those for operator training, may be required to be scheduled during non-standard business hours (i.e., not between the hours of 8:00 am and 5:00 pm) to accommodate the working schedule of the City's personnel. No additional compensation will be awarded to the Contractor for training at non-standard hours.

D. All training courses shall complement the experience and skill levels of the City's personnel.

E. Training courses shall be structured in order of increasing capability or security levels. The purpose of this requirement is to allow personnel with lesser training requirements or security password levels to drop out of the training at certain times while the training continues for personnel with greater requirements or higher security levels.

F. All training courses shall include lecture as well as "hands on" experience for each of the attending personnel. The Contractor shall provide sufficient equipment for this to be accomplished. For example, training in which the instructor uses the computer and the City's personnel passively observe as the instructor demonstrates system functions shall not be acceptable.

G. Unless otherwise specified, all training courses shall be conducted in the City's facilities.

H. All training shall be completed prior to system acceptance.

I. Standard manufacturer training courses are acceptable pending approval by the Engineer and City.

1.05 OPERATOR TRAINING

A. One (four-hour) session, for up to ten persons each, shall be conducted to provide instruction in the use of the Control and Information System to monitor and control the pump stations.

B. Operator training shall include familiarization training covering the Control and Information System. Operators shall be instructed in the names, locations, functions, and basic operation of all items of digital equipment and associated software.

C. Operator training shall cover process and equipment operation both individually and collectively as an operating system. Normal as well as abnormal operating conditions shall be covered, including the response to failure occurrences and system alarms. All operator/system interactions shall be described.

D. Operators shall be trained to instruct other operators and shall be provided with all course materials.

1.06 MAINTENANCE TRAINING

A. A 2-hour course shall be conducted for at least six persons prior to the start-up of digital equipment at the City's pump station. Instruction shall be provided in the following:

1. Operating all digital equipment, including system start-up and shutdown procedures.

2. The use of hardware diagnostic routines, test equipment and test procedures as required to enable the City's personnel to detect and isolate system faults to the circuit board or module level and to implement repairs by replacing failed circuit boards or modules.

3. Calibration and routine maintenance procedures for all analog and digital equipment.

B. Step-by-step written procedures shall be provided for all preventive maintenance tasks and for identifying hardware faults to the circuit board or module level for all items of digital equipment.

C. All digital equipment preventive and corrective maintenance training activities shall be limited to the use of commercially available off-the-shelf test equipment and to the use of diagnostic routines and hardware items which are the same as those to be provided as part of the system.

1.07 INSTRUMENT TRAINING

A. A 2-hour course shall be provided no more than 30 days prior to system start-up to instruct a minimum of five persons each in the calibration and preventive maintenance of the field instruments provided under this Contract.

B. Instrumentation subcontractor shall perform a live demonstration of the radar level instrument configuration using the manufacturer’s Bluetooth smartphone or tablet app for the City during the instrument training session.

PART 2 – PRODUCTS

(NOT USED)

PART 3 – EXECUTION

(NOT USED)

- END OF SECTION -

SECTION 17050

TOOLS, SUPPLIES AND SPARE PARTS - GENERAL

PART 1 – GENERAL

1.01 THE REQUIREMENT

A. The Contractor shall provide tools, supplies, and spare parts as specified herein for the operation and maintenance of the Control and Information System.

1.02 RELATED WORK SPECIFIED ELSEWHERE

A. Section 01300 – Submittals

B. Section 17000 – Control and Information System Scope and General Requirements

PART 2 – PRODUCTS

2.01 TOOLS

A. Provide special tools, other than those normally found in an electronic technician's tool box, required to test, diagnose, calibrate, install, wire, connect, disconnect, assemble and disassemble any digital equipment, instrument, panel, rack, cabinet or console mounted equipment for service and maintenance. This shall include, but not be limited to, the following: connector pin insertion and removal tools, wire crimping tools, special wrenches, special instrument calibrators, indicator lamp insertion and removal tools, etc.

B. Provide tools and test equipment together with items such as instruction manuals, carrying/storage cases, unit battery charger where applicable, special tools, calibration fixtures, cord extenders, patch cords and test leads, which are not specified but are necessary for checking field operation of equipment supplied under this Division.

2.02 SUPPLIES

A. The Contractor shall provide supplies as specifically required in other Sections of Division 17.

2.03 SPARE PARTS

A. Provide spare parts for items of control and instrumentation equipment as recommended by the manufacturer and in accordance with the Contract Documents.

B. Furnish all spares in moisture-proof boxes designed to provide ample protection for their contents. Label all boxes to clearly identify contents and purpose.

C. The Contractor shall replace all spare parts consumed during installation, testing, start-up, the system availability demonstration, and the guarantee period.

D. Refer to individual digital hardware and instrument sections for additional requirements specific to those devices.

PART 3 – EXECUTION

(NOT USED)

- END OF SECTION -

SECTION 17060

SIGNAL COORDINATION REQUIREMENTS

PART 1 – GENERAL

1.01 THE REQUIREMENT

A. The Contractor shall conform to the signal coordination requirements specified herein.

B. The Contractor shall be responsible for coordinating signal types and transmission requirements between the various parties providing equipment under this Contract. This shall include, but not be limited to, distribution of appropriate shop drawings among the equipment suppliers, the electrical subcontractor and the instrumentation subcontractor.

C. Analog signals shall be signals for transmitting process variables, etc. from instruments and to and from panels, equipment PLC's and Control System PLC's.

D. Discrete signals shall consist of contact closures or powered signals for transmitting status/alarm information and control commands between starters, panels, equipment PLC's, the Control System, etc.

1.02 ANALOG SIGNAL TRANSMISSION

A. Signal transmission between electric or electronic instruments, controllers, and all equipment and control devices shall be individually isolated, linear 4-20 milliamperes and shall operate at 24 volts D.C.

B. Signal output from all transmitters and controllers shall be current regulated and shall not be affected by changes in load resistance within the unit's rating.

C. All cable shields shall be grounded <u>at one end only</u>, at the control panel, with terminals bonded to the panel ground bus.

D. Analog signal isolation and/or conversion shall be provided where necessary to interface with instrumentation, equipment controls, panels, and appurtenances.

E. Non-standard transmission systems such as pulse duration, pulse rate, and voltage regulated shall not be permitted except where specifically noted in the Contract Documents. Where transmitters with nonstandard outputs do occur, their outputs shall be converted to an isolated, linear, 4-20 milliampere signal.

F. The Contractor shall provide 24 V power supplies for analog signals and instruments where applicable and as required inside panels, controls, etc.

G. Where two-wire instruments transmit directly to the Control and Information System, the instrumentation subcontractor shall provide power supplies at the PLC-equipped control panels for those instruments.

H. Where four-wire instruments with on-board loop power supplies transmit directly to the Control and Information System, the instrumentation subcontractor shall provide necessary signal isolators or shall otherwise isolate the input from the Control and Information System loop power supply. Similar provisions shall be made when a third element such as a recorder, indicator, or single loop controller with integral loop power supply is included in the loop.

1.03 DISCRETE INPUTS

A. All discrete inputs to equipment and Control and Information System PLC's, from field devices, starters, panels, etc., shall be unpowered (dry) contacts in the field device or equipment, powered from the PLC's, unless specified otherwise.

B. Sensing power (wetting voltage) supplied by the PLC shall be 24 VDC.

1.04 DISCRETE OUTPUTS

A. All discrete outputs from local control panels and Control and Information System PLC's to field devices, starters, panels, etc., shall be 24 VDC powered (sourced) from PLC's.

B. PLC powered discrete outputs shall energize 24 VDC pilot relay coils in the field devices, starters, panels, etc. which in turn open or close contacts in the associated control circuit. The 24 VDC relay coil, contacts, and associated control circuitry shall be furnished integral with the field device, starter, panel, etc. by the supplier and contractor furnishing the field device, starter, or panel.

C. Where required or specified herein, discrete outputs from equipment and Control and Information System PLC's to field devices, starters, panels, motor operated valves, etc., shall be dry contact or relay outputs.

D. Outputs to solenoid valves shall be 120 VAC, powered from the PLC or control panel unless specified or shown otherwise.

1.05 OTHER DISCRETE SIGNALS

A. Discrete signals between starters, panels, etc. where no 24 VDC power supply is available may be 120 VAC, as long as such contacts are clearly identified in the starter, panel, etc. as being powered from a different power supply than other starter/panel components.

B. Where applicable, warning signs shall be affixed inside the starter, panel, etc. stating that the panel is energized from multiple sources.

C. Output contacts in the starter, panel, etc., that are powered from other locations shall be provided with special tags and/or color-coding. Disconnecting terminal strips shall be provided for such contacts.

D. The above requirements shall apply to all starters and panels, regardless of supplier.

PART 2 – PRODUCTS

2.01 PILOT RELAYS

A. Pilot relays shall be supplied with the following:

1. 24 VDC or 120 VAC coils, as required.

2. At a minimum, DPDT contacts rated at 5 A, 120 VAC or 28 VDC.

3. Sockets for 24 VDC and 120 VAC relays shall be of different configurations.

4. Clips for attachment to sockets.

5. Indicator lights that glow when the relay coil is powered.

B. Pilot relays shall be as manufactured by Square D, Allen Bradley, Potter & Brumfield, or equal.

PART 3 – EXECUTION

(NOT USED)

- END OF SECTION -

SECTION 17070

CONTROL AND INFORMATION SYSTEM TESTING - GENERAL

PART 1 – GENERAL

1.01 THE REQUIREMENT

A. The Contractor shall test the Control and Information System as specified herein to demonstrate compliance with the Contract Documents.

1.02 RELATED WORK SPECIFIED ELSEWHERE

A. Section 17000 – Control and Information System Scope and General Requirements

B. Section 17071 – Factory Acceptance Test

C. Section 17072 – Field Testing

D. Section 17073 – Final Acceptance Test

1.03 SUBMITTALS

A. For each of the specified tests, submit a test plan to the Engineer at least one month in advance of commencement of the tests. The test plan shall contain the following at a minimum:

1. A schedule of all testing to be conducted.
2. A brief description of the testing to be performed
3. Test objectives.
4. Testing criteria per the Specifications.
5. Check lists and procedures for performing each of the specified tests.
6. Sample test result documentation.
7. Requirements for other parties.

1.04 GENERAL REQUIREMENTS

A. All system start-up and test activities shall follow detailed test procedures; check lists, etc., previously approved by the Engineer. The Engineer shall be notified at least 21 days in advance of any system tests and reserves the right to have his and/or the City's representatives in attendance.

B. The Contractor shall provide the services of experienced factory trained technicians, tools and equipment to field calibrate, test, inspect, and adjust all equipment in accordance with manufacturer's specifications and instructions.

C. The Contractor (or designee) shall maintain master logbooks for each phase of installation, startup and testing activities specified herein. Each logbook shall include signal, loop or control strategy tag number, equipment identification, description and space for sign-off dates, Contractor signature and Engineer signature. Example test documentation specific to each phase of testing shall be approved prior to initiation of that testing, as specified hereinabove.

D. All test data shall be recorded on test forms, previously approved by the Engineer. When each test has been successfully completed, a certified copy of all test results shall be furnished to the Engineer together with a clear and unequivocal statement that all specified test requirements have been met and that the system is operating in accordance with the Contract Documents.

E. The Engineer will review test documentation in accordance with the Contract Documents and will give written notice of the acceptability of the tests within 10 days of receipt of the test results.

PART 2 – PRODUCTS

(NOT USED)

PART 3 – EXECUTION

(NOT USED)

- END OF SECTION -

SECTION 17071

FACTORY ACCEPTANCE TEST

PART 1 – GENERAL

1.01 THE REQUIREMENT

A. The Contractor shall perform a Factory Acceptance Test on the Control and Information System as specified herein to demonstrate compliance with the Contract Documents.

1.02 RELATED WORK SPECIFIED ELSEWHERE

A. Section 17000 – Control and Information System Scope and General Requirements

B. Section 17070 – Control and Information System Testing, General

C. Section 17072 – Field Testing

D. Section 17073 – Final Acceptance Test

1.03 FACTORY ACCEPTANCE TEST

A. The Control and Information System equipment shall not be shipped until the Contractor receives notice of acceptability of the factory tests.

B. Each item of equipment shall be fully factory inspected, calibrated and tested for function, operation and continuity of circuits. Exceptions shall be approved in writing by the Engineer.

C. Each subsystem shall be fully factory tested for function and operation.

D. System performance shall be tested using a fully integrated system, including all software and hardware. To achieve this, the entire control system, including all peripheral devices and all interconnecting cables (field instruments are not included in this requirement), shall be assembled on the factory test floor and the complete operational program loaded and simulated inputs applied.

E. All hardware and software required to perform the specified testing shall be furnished by the Contractor at no additional cost to the City.

F. The factory testing shall demonstrate all aspects of system sizing and timing including:

1. Monitoring and control scan times at the PLC level.

2. Response times at the operator workstation level.

G. The overall system as well as individual component hardware shall be tested under conditions of power failure to ensure proper response as specified herein.

H. Operator Interface Unit (OIU) Demonstration - This demonstration shall provide proof of system operation on an individual subsystem basis first, and then in the expected operating environment. Both normal and abnormal operating modes shall be demonstrated. Operator workstation testing shall include the following:

1. Demonstrate proper operation, under both normal and abnormal conditions of the OIU application software. This shall include demonstration of system on-line diagnostics, fail-over features, reconfiguration operations, system initialization and restart, software fault tolerance, error detection and recovery, communications, and all additional features necessary to assure the successful operation of the system.

2. Demonstrate the standard features of the system. This shall include proof of operation of the process control database generator, the display generator, data storage and retrieval functions, data acquisition and control, trending functions, and reporting functions.

3. Demonstrate the configuration of the system to verify conformance with the Contract Documents. This shall include graphic displays and vectoring, operator interface functions, trending, reports, alarm management, security system configuration, etc.

4. The system shall be operated with data input/output with the PLC's and associated panels to prove operation of all OIU functions.

5. The testing in Items 2 and 3 above may be performed concurrently (i.e., the standard and configured features of the system may be demonstrated simultaneously).

I. PLC Operation - All functions comparable to those demonstrated for the operator workstations shall be demonstrated on the PLC's. This shall include the following:

1. On-line and off-line diagnostics.

2. System initialization and restart.

3. Network communications.

4. Operation of all control logic shall be demonstrated as described herein.

J. Process I/O Simulation - Process input/output simulation for PLC's shall be performed with a manual simulation control panel, a separate programmable logic controller, network-based simulation software, analog signal generators, and/or jumpering of discrete signals between outputs and associated inputs, or some combination of these. Alternate process I/O systems such as plug-in circuit cards or I/O test modules may be utilized subject to approval by the Engineer to provide the specified simulation functions. The simulation system shall provide analog and discrete I/O hardware devices in sufficient quantity to allow complete and thorough testing of the control strategies and functions of the system. The process I/O simulation system shall be used in several ways as follows:

1. To provide a means of communications checkout from the operator workstations through the various levels of software in the PLC's and to the process, i.e., the simulation panel. Likewise, a discrete or analog input shall be initiated from the simulation panel and the result monitored at the workstations.

2. Alarm response to discrete status changes or analog value limits shall be verified. Database entries or attributes such as engineering units and conversion equations shall be verified by varying analog inputs.

3. To provide data for use at all levels of the control system at the time of system integration.

K. Control Strategy Testing - Provision shall be made to test all control strategies to prove the integrity of each strategy and the process control language in which it is implemented. For each control strategy, all functions shall be tested individually (where possible) and collectively to verify that the control strategy performs as described herein and as required for overall functionality within the control system.

L. Cellular Router Testing – Prior to the Factory Acceptance Test, the instrumentation and controls subcontractor shall make arrangements with the City to receive one activated SIM card from the City for use during the Factory Acceptance Test. In addition, the instrumentation and controls subcontractor shall coordinate with the City and perform a preliminary test of the cellular communications between each LCP and City SCADA system, prior to the Factory Acceptance Test. During the Factory Acceptance Test the instrumentation and controls subcontractor shall demonstrate cellular communication between each LCP and the City's SCADA system over M2M (machine to machine) cellular internet. The LCP OIU shall be configured to display the status of cellular connectivity and it shall be clearly indicated on the OIU.

M. Cellular Data Usage - instrumentation and controls subcontractor shall coordinate with the City prior to the Factory Acceptance Test to ensure that data polling intervals and methods used do not exceed the City's total cellular data cap.

PART 2 – PRODUCTS

(NOT USED)

PART 3 – EXECUTION

(NOT USED)

- END OF SECTION -

SECTION 17072

FIELD TESTING

PART 1 – GENERAL

1.01 THE REQUIREMENT

A. The Contractor shall perform field testing on the Control and Information System as specified herein to demonstrate compliance with the Contract Documents.

1.02 RELATED WORK SPECIFIED ELSEWHERE

A. Section 17000 – Control and Information System Scope and General Requirements

B. Section 17070 – Control and Information System Testing, General

C. Section 17071 – Factory Acceptance Test

D. Section 17073 – Final Acceptance Test

1.03 GENERAL REQUIREMENTS

A. Control system start-up and testing shall be performed to ensure that all plant processes shall be systematically and safely placed under digital control in the following order:

1. Primary elements such as transmitters and switch devices shall be calibrated and tested as specified in Sections 17600, 17700, and 17800.

2. Each final control element shall be individually tested as specified hereinafter.

3. Each control loop shall be tested as specified hereinafter.

4. Each control strategy shall be tested under automatic digital control as specified hereinafter.

5. The entire control system shall be tested for overall monitoring, control, communication, and information management functions, and demonstrated for system availability as specified hereinafter.

B. System start-up and test activities shall include the use of water, if necessary, to establish service conditions that simulate, to the greatest extent possible, normal operating conditions in terms of applied process loads, operating ranges and environmental conditions.

C. Each phase of testing shall be fully and successfully completed and all associated documentation submitted and approved prior to the next phase being started. Specific exceptions are allowed if written approval has been obtained in advance from the Engineer.

1.04 CONTRACTOR'S RESPONSIBILITIES

A. The Contractor shall ensure that all mechanical equipment, equipment control panels, local control panels, field instrumentation, control system equipment and related equipment and/or systems are tested for proper installation, adjusted and calibrated on a loop-by-loop basis prior to control system startup to verify that each is ready to function as specified. Each test shall be witnessed, dated and signed off by both the Contractor (or designee) and the Engineer upon satisfactory completion.

B. The Contractor shall be responsible for coordination of meetings with all affected trades. A meeting shall be held each morning to review the day's test schedule with all affected trades. Similarly, a meeting shall be held each evening to review the day's test results and to review or revise the next day's test schedule as appropriate.

C. The Contractor shall ensure that the electrical subcontractor conforms to the start-up, test and sign-off procedures specified herein to assure proper function and coordination of all motor control center control and interlock circuitry and the transmission of all discrete and/or analog signals between equipment furnished by the electrical subcontractor and the control system specified herein.

D. The Contractor shall ensure that the HVAC subcontractor conforms to the start-up, test and sign-off procedures specified herein to assure proper function of all HVAC system control and interlock circuitry and the transmission of all discrete and/or analog signals between HVAC equipment and controls and the control system specified herein.

1.05 FINAL CONTROL ELEMENT TESTING

A. The proper control of all final control elements shall be verified by tests conducted in accordance with the requirements specified herein.

B. All modulating final control elements shall be tested for appropriate speed or position response by applying power and input demand signals, and observing the equipment for proper direction and level of reaction. Each final control element shall be tested at 0, 25, 50, 75, and 100 percent of signal input level and the results checked against specified accuracy tolerances. Final control elements, such as VFD’s, that require turndown limits shall be initially set during this test.

C. All non-modulating final control elements shall be tested for appropriate position response by applying and simulating control signals, and observing the equipment for proper reaction.

1.06 LOOP CHECKOUT

A. Prior to control system startup and testing, each monitoring and control loop shall be tested on an individual basis from the primary element to the final element, including the operator workstation or loop controller level, for continuity and for proper operation and calibration.

B. Signals from transducers, sensors, and transmitters shall be utilized to verify control responses. Simulated input data signals may be used subject to prior written approval by the Engineer. All modes of control shall be exercised and checked for proper operation.

C. The accuracy of all DAC's shall be verified by manually entering engineering unit data values at the operator workstation and then reading and recording the resulting analog output data.

D. The accuracy of all ADC's shall be verified using field inputs or by manually applying input signals at the final controller, and then reading and recording the resulting analog input data at the operator workstation.

E. Each loop tested shall be witnessed, dated and signed off by both the Contractor (or designee) and the Engineer upon satisfactory completion.

1.07 CONTROL SYSTEM STARTUP AND TESTING

A. Control system startup and testing shall be performed to demonstrate complete compliance with all specified functional and operational requirements. Testing activities shall include the simulation of both normal and abnormal operating conditions.

B. All digital hardware shall be fully inspected and tested for function, operation and continuity of circuits. All diagnostic programs shall be run to verify the proper operation of all digital equipment.

C. Final control elements and ancillary equipment shall be tested under start-up and steady-state operating conditions to verify that proper and stable control is achieved using local area control panels, motor control center circuits, and local field mounted control circuits. All hardwired control circuit interlocks and alarms shall be operational. The control to final control elements and ancillary equipment shall be tested using both manual and automatic (where provided) control circuits.

D. Signals from transducers, sensors, and transmitters shall be utilized to verify control responses for final control elements. Simulated input data signals may be used subject to prior written approval by the Engineer.

E. Each control strategy shall be tested to verify the proper operation of all required functions. The control system start-up and test activities shall include procedures for tuning all control loops incorporating PID control modules, and for adjusting and testing all control loops as required to verify specified performance.

F. The control system start-up and test activities shall include running tests to prove that the Instrumentation, Control and Information System is capable of continuously, safely and reliably regulating processes, as required by the Contract, under service conditions that simulate, to the greatest extent possible, normal plant operating ranges and environmental conditions.

G. A witnessed functional acceptance test shall be performed to demonstrate satisfactory performance of individual monitoring and control loops and control strategies. At least one test shall be performed to verify that the control and instrumentation system is capable of simultaneously implementing all specified operations.

H. Each loop and control strategy test shall be witnessed and signed off by both the Contractor (or designee) and the Engineer upon satisfactory completion.

1.08 FACILITY STARTUP COORDINATION

A. Facility start-up shall comply with requirements specified in the Contract Documents and those requirements specified herein. Facility start-up shall commence after all previously described start-up and test activities have been successfully completed and shall demonstrate that the Instrumentation, Control and Information System can meet all Contract requirements with equipment operating over full operating ranges under actual operating conditions.

B. The control system start-up period shall be coordinated with process startup activities and shall be extended as required until all plant processes are fully operational and to satisfy the Engineer that all control system Contract requirements have been fulfilled in accordance with the Contract Documents.

C. The instrumentation subcontractor's personnel shall be resident at the facility to provide both full time (eight hours/day, five days/week) and 24 hours on call (seven days/week) support of operating and maintenance activities for the duration of the start-up period.

D. At least one qualified control systems technician shall be provided for control system startup and test activities (at least two when loop checkout is being performed).

PART 2 – PRODUCTS

(NOT USED)

PART 3 – EXECUTION

(NOT USED)

- END OF SECTION -

SECTION 17073

FINAL ACCEPTANCE TEST

PART 1 – GENERAL

1.01 THE REQUIREMENT

A. The Contractor shall perform the Final Acceptance Test on the Control and Information System as specified herein to demonstrate compliance with the Contract Documents.

1.02 RELATED WORK SPECIFIED ELSEWHERE

A. Section 17000 – Control and Information System Scope and General Requirements

B. Section 17070 – Control and Information System Testing, General

C. Section 17071 – Factory Acceptance Test

D. Section 17072 – Field Testing

1.03 AVAILABILITY DEMONSTRATION AND FINAL SYSTEM ACCEPTANCE

A. Upon completion of all control system startup activities and prior to final system acceptance, the Contractor shall demonstrate that the availability of the entire control system, including operation under conditions of digital equipment fail-over, initiated either automatically or manually, shall be not less than 99.8 percent during a 30-day availability test period. The City shall be given two (2) weeks' notice of the starting date of the 30-day availability test.

B. For purposes of determining availability figures, downtime of each system or portions of each system resulting from the causes specified hereunder will not be considered system failures.

1. Downtime of a PLC that is not automatically backed-up shall be considered a system failure if the downtime of the failed controller exceeds one (1) hour.

2. Downtime of a portion of the system resulting from failure of any field sensor shall not be considered a system failure provided that the system operates as specified under this condition.

3. Total shutdown of a single PLC resulting from a software fault shall be considered a system failure.

4. An erroneous command to the process that can be specifically related to a software fault shall be considered as one (1) hour of downtime.

5. The inoperability of any subsystem resulting from a software fault shall be considered a system failure.

6. The failure of the same component more than one time during the 30-day test shall be considered a system failure.

C. If the system fails the 30-day availability test, the 30-day test period shall be restarted after the failed component or software is repaired/replaced and full operation is restored. The system shall be demonstrated for the full 30-day period following the restart.

D. The Contractor shall submit an availability demonstration report that shall state that all system availability requirements have been met.

PART 2 – PRODUCTS

(NOT USED)

PART 3 – EXECUTION

(NOT USED)

- END OF SECTION -

SECTION 17080

QUALITY ASSURANCE

PART 1 – GENERAL

1.01 THE REQUIREMENT

A. It is the intent of these Specifications and Drawings to secure high quality in all materials, equipment and workmanship in order to facilitate operations and maintenance of the facility. The Contractor shall provide equipment and services to meet this intent.

1.02 REFERENCE SPECIFICATIONS, CODES AND STANDARDS

A. All work shall be installed in accordance with the National Electric Code, National Electric Safety Code, OSHA, State, local and other applicable codes.

1.03 QUALITY ASSURANCE - GENERAL

A. All equipment and materials shall be new and the products of reputable recognized suppliers having adequate experience in the manufacture of these particular items.

B. For uniformity, only one manufacturer will be accepted for each type of product.

C. All equipment shall be designed for the service intended and shall be of rugged construction, of ample strength for all stresses that may occur during fabrication, transportation, and erection as well as during continuous or intermittent operation. They shall be adequately stayed, braced and anchored and shall be installed in a neat and workmanlike manner. Appearance and safety, as well as utility, shall be given consideration in the design of details.

D. All components and devices installed shall be standard items of industrial grade, unless otherwise noted, which shall be of sturdy and durable construction and be suitable for long, trouble-free service.

E. Electronic components shall be de-rated to assure dependability and long-term stability.

F. Printed circuit boards in field mounted equipment shall be suitable for the specified environmental conditions.

G. Alignment and adjustments shall be non-critical, stable with temperature changes or aging and accomplished with premium grade potentiometers.

H. Components of specially selected values shall not be inserted into standard electronic assemblies in order to meet the performance requirements of this specification.

1.05 OPTIONAL EQUIPMENT

A. Optional or substituted equipment or both requiring changes in details or dimensions required to maintain all structural, mechanical, electrical, control, operating, maintenance

or design features incorporated in these Specifications and Drawings shall be made at no additional cost to the City. In the event that the changes are necessary, calculations and drawings showing the proposed revisions shall be submitted for approval. The Contractor shall coordinate all changes with other affected trades and contracts and pay all additional charges incurred.

1.06 GUARANTEE

A. The instrumentation subcontractor through the Contractor shall install, maintain and guarantee the Instrumentation, Control and Information System as specified under the General Conditions and Division 1 of the Specifications. Maintenance personnel provided by the instrumentation subcontractor shall instruct the City's personnel in the operation, adjustment, calibration and repair of the equipment being serviced. All preventive and corrective activities shall be documented with service reports, which shall identify the equipment being serviced, state the condition of the equipment, describe all work performed and list materials used. A copy of all service reports shall be delivered to the City on the day the work is performed.

B. The instrumentation subcontractor shall provide the services of factory-trained service technician(s) at least twice during the guarantee period, for the purpose of performing preventive hardware maintenance.

C. Corrective hardware and software maintenance during the guarantee period shall be performed in accordance with the requirements of Division 1 and, in addition, shall meet the following requirements:

1. Corrective hardware maintenance shall be performed by factory-trained service technician(s) specifically trained to service the digital equipment provided. Technicians possessing suitable training and experience shall be provided to perform corrective maintenance on all other equipment. The hardware service technician(s) shall be available on-site within 24 working hours after notification by the City.

2. Corrective software maintenance shall be performed for software provided by the instrumentation subcontractor and incorporated into the system prior to the completion of system commissioning. Software service programmer(s) shall be available for consultation within four business hours and, if required, on-site within 16 business hours after notification by the City. Corrective software maintenance shall include the supply, installation and startup of all application software upgrades released during the guarantee period.

3. Corrective hardware and software maintenance performed during the guarantee period shall be performed at no cost to the City.

4. As used herein, the term "working hours" shall be defined as those of the treatment facility (seven days per week, 24 hours per day). The term "business hours" shall be defined as the hours between 8:00 a.m. and 5:00 p.m., local time, Monday through Friday; excluding holidays.

5. The guarantee period shall commence upon final acceptance of the completed treatment facility in accordance with the provisions of the Contract Documents.

D. The instrumentation subcontractor shall submit to the City a proposed maintenance agreement incorporating the following features:

1. Extension of preventive hardware maintenance services as described above for a period of up to five years from the expiration of the warranty period.

2. Provisions for corrective hardware and/or software maintenance work on a will-call basis for a period of up to five years from the expiration of the warranty period. Corrective maintenance work shall be performed by properly trained personnel as described above.

E. The proposed agreement shall include provisions for payment based upon an annual fee for preventive maintenance and cost plus expenses for corrective maintenance work. The portion dealing with corrective maintenance shall be written to include corrective maintenance caused by actions of the City during the warranty period and shall contain clauses for re-negotiation of contract prices based upon changes in recognized economic indicators published by the United States Department of Commerce.

1.07 SHIPPING HANDLING AND STORAGE

A. In addition to shipping, handling and storage requirements specified elsewhere in the Contract Documents, air conditioning/heating shall be provided for storage of all field instrumentation, panels, digital equipment and ancillary devices to maintain temperatures between 20 and 25 degrees C and relative humidity 40 to 60 percent without condensation. The air shall be filtered and free of corrosive contaminants and moisture.

1.08 FABRICATION

A. Fabrication of all equipment shall conform to the codes and standards outlined in this Section, and other portions of the Contract Documents.

B. The Engineer may inspect the fabricated equipment at the factory before shipment to job site. The Contractor shall provide the Engineer with sufficient prior notice so that an inspection can be arranged at the factory. Inspection of the equipment at the factory by the Engineer will be made after the manufacturer has performed satisfactory checks, adjustments, tests and operations.

C. Equipment approval at the factory only allows the equipment to be shipped to the project site. The Contractor shall provide for the proper storage, installation and satisfactory start-up and operation of the equipment to the satisfaction of the equipment manufacturer, the instrumentation subcontractor, and the Engineer.

1.09 INSTALLATION

A. All instrumentation and control system installation work, whether new construction or modifications to existing equipment/panels/structures, shall conform to the codes and standards outlined in this Section, and other portions of the Contract Documents.

B. The instrumentation subcontractor shall assign a competent representative who shall provide full time coordination and supervision of all on-site instrumentation and control

system construction work from commencement of construction through completion and final acceptance.

C. All labor shall be performed by qualified craftsmen in accordance with the standards of workmanship in their profession and shall have had a minimum of three years of documented experience on similar projects.

D. All equipment and materials shall fit properly in their installations. Any required work to correct improperly fit installations shall be performed at no additional expense to the City.

E. All work shall be performed in a neat and workmanlike manner. All hardware and instrumentation shall be installed in accordance with requirements specified herein, in accordance with industry best practices, in accordance with manufacturers' recommendations, and in a manner suitable for ease of operation, inspection, and maintenance. All wiring shall be neatly bundled, run in wireway, and terminated. All spare wiring shall be neatly coiled and clearly labeled at both ends for future use by the City. Any work not meeting these requirements shall be corrected at no expense to the City.

F. Sufficient common-mode and differential-mode noise rejection shall be provided to insure operation of the plant process control system to meet all specification requirements. General practice shall include:

1. Maintaining crossings between noisy wires and signal wires at right angles.

2. Maintaining separation between noisy wires and signal wires as wide as practical.

3. Grounding all signals, shields and power supplies at the process control unit or local control panel.

4. Providing passive filters on signals with time constant compatible with scan intervals and overvoltage protection.

5. Eliminating cable splices. All splices in instrumentation and control system signal and network cables shall be approved in advance by the Engineer.

6. Providing a floating output for transmitters that have their own power sources.

G. DC and AC power grounding shall be performed in accordance with the digital hardware manufacturer's recommendations as well as all applicable code requirements.

H. The case of each field instrument and control panel shall be grounded in compliance with the National Electric Code.

I. Power wires shall be separated from parallel-running signal wires by the following minimum spacing:

CIRCUIT VOLTAGE (VAC)	MINIMUM SPACING (IN.)
120	12
240	18
480	18
2000 and above	24

J. The Contractor shall provide all required cutting, drilling, inserts, supports, bolts, and anchors, and shall securely attach all equipment and materials to their supports. Embedded supports for equipment furnished under this Division shall be provided and installed as shown specified herein and shown on the Drawings.

K. Following acceptance of the factory tests by the Engineer, and in accordance with the construction schedule, the Contractor shall commence installation of the digital control system hardware. Digital system equipment items shall not be installed, however, until all architectural, mechanical, HVAC and electrical work has been completed in the equipment rooms, MCC's, control rooms and all structural and/or mechanical work has been completed within 50 feet of equipment locations.

L. Upon completion of the above construction work, the Contractor shall request an inspection of the above-named areas. The Engineer will issue a written approval to proceed with delivery and installation only after being satisfied that all work described above has been properly performed. Digital equipment shall remain at the factory site or storage prior to approval for delivery to the project site. Partial shipments may be required to meet construction schedule requirements.

PART 2 – PRODUCTS

(NOT USED)

PART 3 – EXECUTION

(NOT USED)

- END OF SECTION -

SECTION 17100

CONTROL AND INFORMATION SYSTEM HARDWARE, GENERAL

PART 1 – GENERAL

1.01 THE REQUIREMENT

A. The process control system is physically and functionally distributed between PLC equipped control panels, motor control panels, field panels, operator workstations and appurtenances.

B. Although manual control facilities shall be provided adjacent to each final control element or in local control panels, such facilities are for testing, maintenance and local monitoring purposes only and shall not be regarded as backup to the PLC-based control system.

C. PLCs may be categorized as either “process PLCs” that are provided by the instrumentation subcontractor or “equipment control PLCs” provided by equipment manufacturers for the operation of their equipment (blowers, centrifuges, chemical systems, filters, etc.). Unless otherwise specified, all PLCs provided under this Contract shall conform to the requirements specified in this Division.

D. Major plant control system digital equipment items are described in the Specifications and shown on the Drawings.

1.02 RELATED WORK SPECIFIED ELSEWHERE

A. Section 17120 – Programmable Logic Controllers

1.03 DIGITAL HARDWARE CONFIGURATIONS

A. The digital hardware configuration shown on the Control System Architecture Drawing depicts overall system configuration requirements. System design shall be based upon this concept and shall provide an overall digital system availability of 99.8 percent under the conditions specified in Section 17073. Unless otherwise specified, designs that vary from this concept will be rejected.

B. All discrete and analog data acquisition, pre-processing, storage and process control functions shall be performed at the PLC level. Run time and flow accumulations shall be performed at the PLC level. Except for minimal calculations related to report-specific functions such as minimum, maximum, average, etc., operator workstations shall not be used to perform calculation for the process control system. Operator workstations shall be fully independent devices, individually connected to the plant control system networks.

C. No other exceptions will be considered.

PART 2 – PRODUCTS

2.01 GENERAL SYSTEM HARDWARE REQUIREMENTS

A. Unless otherwise specified, all hardware shall be rated for industrial use, resistant to shock, vibration, electromagnetic interference, static discharge, and suitable for the environmental conditions described elsewhere in this Division. Commercial or office grade equipment shall not be accepted.

B. Unless otherwise specified, modular construction shall be employed to simplify maintenance and to provide for future hardware expansion. Plug-in, modular PCB's or modules shall be employed for easy removal to permit exposure of circuit wiring, components and test points. Extender boards shall be provided if necessary to permit PCB's to be completely exposed for testing purposes.

C. Keying schemes shall be used to prevent PCB misplacement.

D. The temperature inside each enclosure containing digital hardware (i.e., cabinet, panel or console) shall be continuously monitored and shall generate an alarm to the nearest PLC if the temperature rises to an adjustable, preset high temperature.

2.02 DIGITAL SYSTEM FAILURE DETECTION AND FAIL-OVER REQUIREMENTS

A. No degradation in control system performance shall occur when the system is operating in a partial failure or an equipment fail-over mode. Likewise, no degradation of system performance shall occur while a backed-up system component is undergoing preventive or corrective maintenance.

B. All devices connected to the plant control system network shall be self-checking and shall report their operational status to the operator workstations as either "normal" or "failed". A graphic display based on the system architecture drawing shall be furnished with the control and information system showing this information along with current communication status of each device.

PART 3 – EXECUTION

3.01 REQUIREMENTS

A. Refer to Section 17000, Part 3.

- END OF SECTION -

SECTION 17120

PROGRAMMABLE LOGIC CONTROLLERS

PART 1 – GENERAL

1.01 THE REQUIREMENT

A. The Contractor shall furnish, test, install and place in satisfactory operation all programmable logic controllers, with all spare parts, accessories, and appurtenances as herein specified and as shown on the Drawings.

1.02 RELATED WORK SPECIFIED ELSEWHERE

A. Section 17000 – Control and Information System Scope and General Requirements

B. Section 17060 – Signal Coordination Requirements

C. Section 17100 – Control and Information System Hardware - General

D. Section 17125 – Operator Interface Units

E. Section 17170 – Mobile Workstation Computers

F. Section 17190 – Uninterruptible Power Systems

G. Section 17500 – Enclosures, General

1.03 TOOLS, SUPPLIES AND SPARE PARTS

A. Tools, supplies and spare parts shall be provided as specified in Section 17050 - Tools, Supplies, and Spare Parts. In addition, the following specific spare parts items shall be provided:

1. One of each type and size of module for PLC equipment furnished under this Contract.

2. One of each type and size of PLC and equipment power supply furnished under this Contract.

PART 2 – PRODUCTS

2.01 PROGRAMMABLE LOGIC CONTROLLERS - GENERAL

A. The instrumentation subcontractor shall furnish programmable controllers (PLC's) as specified herein and as shown on the Drawings. PLC's shall be provided complete with backplane, power supply, I/O cards, special function cards, instructions, memory, input/output capacity, and appurtenances to provide all features and functions as described herein. No substitutions will be permitted.

B. All components of the PLC system shall be of the same manufacturer, who shall have fully tested units similar to those being furnished in an industrial environment with associated electrical noise. The PLC system shall have been tested to meet the requirements of NEMA Standard ICS 2-230 (Arc Test) and IEEE C37.90.1 (SWC). The processing unit shall perform the operations functionally described herein based on the program stored in memory and the status of the inputs and outputs.

C. Programmable controllers shall be designed to operate in an industrial environment. The PLC shall operate in an ambient temperature range of 0-60°C and a relative humidity of 5-95 percent, non-condensing. The PLC shall operate on supply voltages of 90-132 VAC at 4763 Hz or 24 VDC if provided with a battery backup system. An integral fuse shall be provided on the power supply for short circuit protection and shall be front panel accessible. Integral overcurrent and undervoltage protection shall be provided on the power supply.

D. Where applicable, the minimum PLC backplane size shall be 7 slots, not including power supply slots.

E. System configuration shall be as shown on the Control System Architecture Drawing. PLC types shall be designated on the System Block Diagram Drawing and correspond to the specifications herein. Only a single type of processor shall be supplied for all PLCs of a designated type. Memory and processor shall be adequate for all control functions specified.

F. PLCs shall be, at a minimum, an Allen-Bradley CompactLogix 5069-L306ER with 5000 series I/O modules as manufactured by Rockwell Automation, no substitutions or exceptions. PLCs shall be upgraded to increase memory capacity as required to meet Section 17120-2.02-D memory requirements. If one PLC is upgraded, all PLCs must be upgraded to the same model to ensure spare part uniformity.

2.02 PROCESSORS

A. The processor and its associated memory shall be enclosed in a modular enclosure. A multiple-position selector switch or equivalent shall be used to select processor operating mode. LED-type indicating lights shall be provided to indicate processor, memory, and battery status. Errors in memory shall be recognized and shall activate the memory error indicating lights. The PLC processor shall monitor the internal operation of the PLC for failure and provide an alarm output. Nonvolatile memory in the form of a manufacturer supplied industrial super capacitor or equivalent technology shall be required to maintain the entire current program and firmware of the controller in the event of power loss. The program shall be updated onto the flash memory each time a program change such as an online edit or tag value is changed.

B. The instruction set for the PLC shall conform to the requirements of IEC 61131-3. Each PLC shall have the capability to run all five of the standard IEC 61131-3 languages simultaneously. These five languages shall be:

1. Ladder Diagram

2. Structured Text

3. Instruction List

4. Function Block Diagram

5. Sequential Function Chart

C. Additional co-processors or modules may be necessary and shall be furnished as required to meet the functions specified herein and in Section 17950 – Functional Control Descriptions.

D. PLC processors shall be provided with sufficient user program, data and logic memory to allow for future expansion of the overall system. The total memory used on each processor shall be less than 60% of available memory at project completion.

2.03 COMMUNICATIONS

A. PLC communications shall be provided as specified in Section 17185 – Process Control System Networks and as shown on the System Block Diagram.

B. In addition to a communications port (RJ45 Ethernet) for the control system network, communication ports shall be provided for any other devices required (i.e., operator interface unit) plus an additional communication port for connection to a notebook computer.

C. The PLC shall be able to support various types of communication systems for data links to field instruments (where specified) in addition to connected equipment including, but not limited to power monitors, VFDs and motor protection monitors. At a minimum, Modbus TCP client and server and Ethernet/IP shall be supported by the PLC. PLC CPU memory shall be selected as required to run all Rockwell Automation Logix 5000 Modbus TCP Add-on Instructions (AOI)s that pole ModbusTCP data from devices shown on the System Architecture Diagram. The Contractor shall coordinate the efforts of the necessary parties (instrumentation subcontractor and equipment suppliers) to accomplish the required device data table addressing between each PLC and the associated connected equipment.

D. Additional communication modules or protocol gateways may be required to support specific communication protocols required under this Contract and shall be supplied at no extra cost to the City. Protocol gateways shall be Anybus-X protocol gateway by Anybus.

2.04 INPUT/OUTPUT SUBSYSTEMS

A. Input/output hardware shall be plug-in modules in associated I/O backplane/chassis or DIN-rail mounting assemblies. Each unit shall handle the required number of process inputs and outputs plus a minimum of 10 percent active pre-wired spares for each I/O type furnished, plus a minimum of 20 percent spare I/O module space for the addition of future circuit cards or modules.

B. Discrete inputs shall be 24 VDC or 120 VAC signals (integral to the PLC) from dry field contacts. Discrete outputs shall be 24 VDC or 120 VAC outputs sourced from the PLC,

or dry relay contacts (2A minimum) as required. Refer to Section 17060 – Signal Coordination Requirements for further details of discrete signal type and voltage requirements. The PLC shall provide momentary and latched outputs as required to interface with motor controls and external devices. Interposing relays shall be provided where required to interface with field equipment. Interposing relays shall be as specified in Section 17550. Electrical isolation shall be provided where required. Maximum density for discrete I/O modules shall be 32 per input module and 16 per output module.

C. Analog input circuits shall be isolated, minimum 16-bit resolution type. Analog input hardware shall be provided as required for all types of analog inputs being transmitted to the PLC. In general, analog input modules shall be capable of receiving 4-20 mA signals. Where required, RTD input modules shall have a minimum resolution of 0.15□C and be capable of accepting signals from 100-ohm Platinum RTD's. Analog outputs shall be coordinated with the receivers but shall generally be isolated 24 VDC 420 mA outputs powered from the PLC. Each input/output circuit shall have optical isolation to protect the equipment against high voltage transients. Optical isolation shall be rated at not less than 1500 V RMS. Lightning/surge protection shall be provided as specified in Section 17560 - Surge Protection Devices. Maximum density for analog I/O modules shall be 8 per module.

D. Input/output modules shall be configured for ease of wiring and maintenance. The modules shall be connected to wiring arms that can be disconnected to permit removal of a module without disturbing field wiring. Covers shall be provided to prevent operator personnel from inadvertently touching the terminals. The process interface modules shall be provided with screw-type terminal blocks with barriers between adjacent terminals for connection of field inputs. Terminals shall be suitable for accepting up to and including No. 14 AWG wire. All DC output circuits to the field shall include fuses, either integral or at the terminal strip. Output failure mode shall be selectable so that upon station or communication system failure all outputs shall be placed either in the non-conducting mode, or remain as were prior to failure. Light-emitting diodes shall be provided for status indication for each input and output point.

E. External power supplies shall be provided with the PLC as required to meet specified installed I/O power requirements plus spares. Power supplies shall be modular units, shall be fully redundant and shall alarm the PLC upon failure. Power supplies shall have a line regulation of 0.05% and meet the environmental and power requirements specified herein for the PLC.

2.05 REMOTE I/O SUBSYSTEMS

A. Remote I/O shall be provided as designated on the Control System Architecture Drawing. Remote I/O shall be either PLC backplane type I/O or field modules as manufactured by the PLC manufacturer. Field modules shall meet the requirements of Subsection 2.04, Input/Output Subsystems. Remote I/O processor or communication modules shall be modular and individually replaceable.

B. Remote I/O shall communicate with the PLC using the PLC manufacturer's standard protocol or an open standard network such as Ethernet IP, Modbus TCP/IP, or equal.

2.06 INPUT/OUTPUT CIRCUIT ARRANGEMENT

A. Signal and control circuitry to individual input/output boards shall be arranged such that board failure shall not disable more than one half of the control loops within any group of controlled equipment (e.g., one pump out of a group of three pumps, two pumps out of four, etc.). Where possible, individual control loops and equipment shall be assigned to individual boards such that failure of the board will disable only one loop or piece of equipment.

2.07 PROGRAMMING SOFTWARE

A. The PLC programming and configuration software shall be the manufacturer's latest, full-featured version, Windows-based, and shall be fully compliant with IEC 61131-3 standards. The software package shall consist of all programming, configuration, and documentation software needed to place the control and information system in satisfactory operation. The software shall allow on-line and off-line program development and documentation. PLC programming software shall include documentation on optical media.

B. One (1) license of the Studio 5000 Logix Designer Standard/Network Edition software shall be purchased by the instrumentation subcontractor and registered to the City.

C. All configuration and programming software necessary shall be provided on the computer specified in Section 17170 – Mobile Workstation Computers for connection to the PLC processor via a communications port. All necessary hardware required to allow the notebook computer to perform PLC configuration and programming shall be provided.

D. If available, the configuration and programming software shall support communication over the network specified in Section 17180 – Process Control System Networks to implement its functions remotely from an operator workstation. All configuration and programming software necessary to implement this functionality shall be provided on the HMI Server operator workstations specified in Section 17140 – Operator Workstations. All necessary hardware required to have the operator workstation perform PLC configuration and programming shall be provided.

PART 3 – EXECUTION

3.01 REQUIREMENTS

A. PLC programming shall be furnished to perform all functions described in Section 17950 – Functional Control Descriptions, including global functions. In addition, PLCs shall be programmed to provide additional functions described in other sections of this Division.

B. PLC programming shall make use of the various IEC languages as appropriate to the specific task and shall be performed in a modular style making extensive use of program blocks (subroutines) and program variables to be passed to the program blocks for specific equipment. It is the intent of this requirement to allow for enhanced readability and ease of modification of the program code through the elimination of multiple instances of repeated code for the same function in a “hard-coded” style.

C. Extensive comments shall be placed in the program code to describe the functions of all elements of the program code. PLC code that does not contain comments shall be rejected.

D. Refer to Section 17000, Part 3 for additional requirements.

- END OF SECTION -

SECTION 17125

OPERATOR INTERFACE UNITS

PART 1 – GENERAL

1.01 THE REQUIREMENT

A. The Contractor shall furnish, test, install and place in satisfactory operation all operator interface units, with all spare parts, accessories, and appurtenances as herein specified and as shown on the Drawings.

1.02 RELATED WORK SPECIFIED ELSEWHERE

A. Section 17000 – Control and Information System Scope and General Requirements

B. Section 17100 – Digital System Hardware Configuration

C. Section 17120 – Programmable Logic Controllers

PART 2 – PRODUCTS

2.01 OPERATOR INTERFACE UNIT

A. An Operator Interface Unit (OIU) shall be provided to view and change PLC monitoring and control parameters and to display alarm messages using a graphical user interface. The OIU shall provide the following features as a minimum:

1. Minimum of 12.1-inch diagonal display
2. 1200 x 800 WXGA, 16:10 format
3. 24-bit color
4. Resistive film touch screen interface
5. Minimum of 1GB internal storage
6. Minimum of 1GB MB RAM application memory
7. 1.0 GHz CPU
8. Windows CE Operating System
9. Battery-backed real-time clock
10. SD, 2 USB-A, 1 Mini-USB-B, and PCI interfaces
11. RJ-45 Ethernet communication interface, 10/100 Mb auto selecting
12. RS-232 serial port

13. Sound and buzzer output
14. Windows-based configuration software complete with download cable
15. Operating Voltage: 120 VAC or 24 VDC (internal or via independent power supply)
16. Enclosure Rating: NEMA 12/4X to match the associated PLC cabinet rating
17. Environment: 0-55°C, 5-95% relative humidity, non-condensing

B. Furnish a Sandisk USB 3.0 flash drive with 256 Gigabytes of storage capacity for local data trending and alarm storage.

C. The operator interface unit shall be Allen-Bradley PanelView 5510 model 2711P-RGT12SP, or Engineer approved equal by Allen-Bradley.

PART 3 – EXECUTION

3.01 GENERAL REQUIREMENTS

A. The OIU shall be configured to display all PLC I/O, setpoints, and parameters. All equipment failures shall be alarmed. PLC I/O values and operator-entered setpoints shall be displayed with associated units and service descriptions. Menus shall be provided to navigate between screens of different equipment items. Displays shall be arranged in a hierarchical structure with displays for specific equipment items grouped together. Additional functionality shall be as specified elsewhere in this Division.

B. The OIU shall be configured to trend all radar level, float switch and pump starts, pump stops and all alarm data to an external USB drive, specified herein, for troubleshooting purposes during pump station startup.

C. All necessary configuration and programming software shall be provided on optical media and turned over to the City.

D. Unless otherwise noted, each OIU shall be mounted between 48 and 60 inches above the floor or work platform.

E. Refer to Section 17000 for additional requirements.

- END OF SECTION -

SECTION 17135

CELLUAR COMMUNICATION SYSTEM

PART 1 – GENERAL

1.01 THE REQUIREMENT

A. The Contractor shall furnish, test, install and place in satisfactory operation the cellular communication system, with all spare parts, accessories, and appurtenances as herein specified and as shown on the Drawings.

B. The cellular communication system shall utilize 4G LTE cellular Ethernet. The Contractor shall construct the system in accordance with all applicable FCC rules. In addition, the Contractor shall prepare and submit any other required documentation as required.

1.02 RELATED WORK SPECIFIED ELSEWHERE

A. Section 17000 – Control and Information System Scope and General Requirements

B. Section 17500 – Enclosures, General

C. Section 17560 – Surge Protection Devices

1.03 TOOLS, SUPPLIES AND SPARE PARTS

A. The following tools shall be provided:

1. One set of coaxial cable preparation tools required for installing coaxial cable ground clamps and all types of coaxial cable connectors supplied under this Contract. Tools shall be specifically designed for the size and type of cables supplied under this Contract.

2. Cellular router remote management software as described herein.

B. The following spare parts shall be provided:

1. One (1) spare 4G LTE router of the make and model furnished under this contract.

2. One (1) spare 4G LTE antenna of the make and model furnished under this contract.

3. Two (2) of each type of coaxial cable connector furnished under this Contract.

1.04 SUBMITTALS

A. In addition to submittals required under Section 17030 – Control and Information System Submittals, submit antenna installation details for antenna installations required under this Contract. The details shall include scaled drawings of the antenna, antenna mounting hardware and support structures, coaxial cables, connectors, ground clamps, fasteners,

and lightning surge protectors. An equipment list shall be included identifying each component. Submit product literature for each component.

1.05 TELEMETRY SYSTEM EQUIPMENT LOCATIONS

A. Cellular router shall be mounted on a DIN rail in the stormwater pump station LCP (local control panel). Refer to the Drawings for the LCP and cellular antenna locations.

PART 2 – PRODUCTS

2.01 GENERAL

A. The Contractor shall provide a multicarrier 4G LTE cellular communications system.

B. All communications equipment shall be installed in accordance with the manufacturer's recommendations, FCC rules and regulations, and details on the Contract Drawings.

C. All cellular communications equipment power and signal lines that extend or are located outside of an enclosed structure shall be protected from lightning and voltage surges in accordance with the requirements of Section 17560 – Surge Protection Devices.

2.02 OMNI-DIRECTIONAL CELLULAR ANTENNAS AND APPURTENANCES

A. Omni-directional antennas for the remote station cellular routers shall be of two types. For remote sites with received signal strength (RSSI) greater than 20 dB above the threshold (i.e., fade margin), a low profile omni-directional antenna shall be deployed. To improve communication reliability at remote sites with lower signal strength, a higher gain omni-directional antenna shall be deployed.

B. Low profile omni-directional cellular antennas shall be AirLink Panel LPWA by Sierra Wireless; no substitutions.

C. Omni-directional cellular antenna shall meet the following requirements:

1. Rotation pattern: omni-directional

2. Frequency Range: 698-3800 MHz

3. Peak Gain: 698-960 MHz 2 dBi and 1710-3800 MHz 5 dBi

4. Bandwidth VSWR: less than 2.5:1

5. Impedance: 50 ohms

6. Maximum input power rating: 30 watts

7. RF Connector: SMA

8. Cable type: CS29

D. Cellular antennas shall be supplied as a complete kit including mounting hardware, coaxial antenna cable, surge suppressor, weatherproofing kit, and other appurtenances required for a reliable installation. Refer to Instrumentation Detail Drawings for additional installation requirements.

2.03 CELLULAR ROUTERS

A. Cellular routers shall utilize both 4G Cat 12. LTE-A Pro (600/150 Mbps), HSPA+, CBRS, FirstNet cellular radio to transmit and receive Ethernet/IP PLC communications data. The routers shall be completely compatible with the control and information system's hardware and communication protocols. Cellular router shall have dual SIM card and multi-carrier support for link redundancy.

B. Cellular routers shall have the following operation and performance specifications:

1. Environmental

a. Temperature Range: -30°C to +70°C

b. Humidity: 95% at 60°C; non-condensing

2. Standards and Certifications:

a. Safety: UL 60950-1

b. EMI: FCC Part 15B Class A or B.

c. Radio: FCC Rules Part 22H, FCC Part 24E.

3. General Router Requirements

a. <u>Protocol Support:</u> The router shall support the following network protocols:

i. HTTP, HTTPS, FTP, SFTP, SSL, SMTP, Device Cloud SNMP, SNMP (v1/v2c/v3), SSH, Telnet and CLI for web management.

ii. remote management via Digi Remote Manager; SMS management, protocol analyzer, ability to capture PCAP for use with Wireshark.

iii. DynDNS, Dynamic DNS client compatible with BIND9/No-IP/DynDNS.

iv. DHCP.

v. DNS client compatible with BIND9/No-IP/DynDNS.

vi. QoS via TOS/DSCP/WRED.

vii. Ethernet, serial I/O and Modbus bridging for connecting diverse field assets.

b. <u>Routing/Failover:</u> The router shall support the following routing and failover features:

i. IP pass-through.

ii. NAT, NAPT with IP Port Forwarding.

iii. Ethernet Bridging.

iv. GRE.

v. Multicast Routing.

vi. Routing Protocols: PPP, PPPoE, RIP (v1,v2) OSPF, SRI, BGP, iGMP routing (multicast).

vii. RSTP (Rapid Spanning Tree Protocol).

viii. IP Failover: VRRP, VRRP+TM.

c. Security: The router shall support the following security features:

i. IP filtering.

ii. Stateful inspection firewall with scripting address and port translation;

iii. VPN: IPSec with IKEv1, IKEv2, NAT Traversal.

iv. SSL, SSLv2, SSLv3, FIPS 197, Open VPN client and server; PPTP, L2TP.

v. VPN Tunnels: 5. Cryptology: SHA-1, MD5, RSA.

vi. Encryption: DES,3DES and AES up to 256-bit (CBC mode for IPsec).

vii. Authentication: RADIUS, TACACS+, SCEP for X.509.

viii. certificates;.

ix. Content Filtering(via 3rd party).

x. MAC Address Filtering; VLAN support.

d. Hardware Interfaces: The router shall support the following interfaces:

i. 2 x RJ45 10/100 Ethernet, 1 x RJ45 RS-232/RS-485 serial and 1 x USB 2.0

ii. Antenna connectors: SMA

e. Cellular Modem (WWAN)

i. The cellular modem shall be equipped with two SIM card slots capable of supporting two different cellular service providers. The modem shall be capable of automatically switching between providers to ensure optimal cellular signal quality.

ii. The cellular modem shall be capable of supporting at least two of the following 4G LTE carriers through a Machine-to-Machine (M2M) data plan:

1) Verizon

2) AT&T

3) Sprint

4) T-Mobile

iii. Input Power: The cellular router shall be capable operating on 24V DC power.

iv. Remote Configuration: The user shall have the ability to configure any cellular radio over-the-air from the SCADA network.

v. PLC Programming: The radio shall provide the user the capability to program any remote site PLC over-the-air from any computer in the SCADA network.

vi. Active Ports: The radio shall have, as a minimum, two active ports that can sequentially manage the transfer of Ethernet and serial data messages: 1 serial and 1 Ethernet. In addition, router shall have 1 USB 2.0 port.

f. Product Requirements:

i. Cellular routers shall be AirLink RV-50 by Sierra Wireless; no substitutions.

2.04 TRANSMISSION CABLE AND MISCELLANEOUS REQUIREMENTS:

A. Provide all cables and connectors to connect the radio to the antenna. Provide flexible jumper cables with appropriate connectors within panels to connect the radio to the surge suppressor. Attenuation including connectors from the radio to the surge suppressor shall not exceed 0.25 dB.

B. Provide weatherproof connections that are suitable for direct environmental exposure. Weatherproof connections shall include heat shrink tubing that provides a waterproof and corrosion resistant seal. The heat shrink tubing shall be polyolefin lined with thermoplastic adhesive as manufactured by 3M, or equal. Heat shrink tubing shall be provided for all RF transmission cable connections located outside of panels or air-conditioned rooms.

C. Utilize appropriate bulkhead RF transmission cable surge suppression devices at cable entrances, Polyphaser or equivalent.

PART 3 – EXECUTION

3.01 CELLULAR ROUTER TESTING

A. Prior to the LCP Factory Acceptance Test, the instrumentation and controls subcontractor shall request one activated SIM card from the City and coordinate with the City to establish a reliable communications link with the City SCADA system. During the test the instrumentation and controls subcontractor shall demonstrate internet to M2M (machine to machine) cellular internet connectivity with the City SCADA System.

B. After the cellular routers have been installed, the Contractor shall test the following items and make all necessary adjustments to maximum performance of the communication links:

1. Signal strength

2. Cellular protocol mode (LTE 4G)

3. Standing wave ratio (SWR)

4. Radio temperature

5. Software revision

6. Hardware revision

C. The Contractor shall test the integrity of the antenna cable after installation to ensure that the insertion losses do not exceed 2.0 dBs.

D. The Contractor shall submit all test results of the above-described tests for approval by the Engineer. The Contractor shall provide a copy of the approved test results in the final O&M Manuals.

3.02 WARRANTY

A. Cellular routers shall be furnished with a minimum 5-year manufacturer's warranty (3 year standard plus a 2 year extension). The warranty shall cover hardware and software provided by the manufacturer.

B. The warranty period shall begin upon Final Acceptance as described in Part 3 of Section 17000.

- END OF SECTION -

SECTION 17170

MOBILE WORKSTATION COMPUTERS

PART 1 – GENERAL

1.01 THE REQUIREMENT

A. The Contractor shall furnish, test, install and place in satisfactory operation a mobile workstation computer, with all spare parts, accessories, and appurtenances as herein specified and as shown on the Drawings.

1.02 RELATED WORK SPECIFIED ELSEWHERE

A. Section 17000 – Control and Information System Scope and General Requirements.

B. Section 17100 – Digital System Hardware Configuration

C. Section 17120 – Programmable Logic Controllers

PART 2 – PRODUCTS

2.01 MOBILE WORKSTATION COMPUTER

A. The notebook computer shall be a Precision 7560 as manufactured by Dell (or latest version at time of purchase) with the following specifications, or ENGINEER approved equal.

Option	Selection	Quantity
Processor	11th Gen Intel® Core™ i7-11850H	1
Operating System	Windows 10 Pro 64bit English with free Windows 11 Upgrade	1
Microsoft Office	Microsoft Office Professional 2021 (or latest version at time of purchase)	1
Graphics Card	NVIDIA® RTX™ A2000, 4 GB GDDR6	1
Display	15.6" UltraSharp™ FHD IPS(1920x1080)AG LED-backlit w/Prem Pan Grnt(72% color gamut) w/Mic, Non-touch	1
Memory	32 GB, 2 x 16 GB, DDR4, 3200MHz, Non-ECC, SODIMM	1
Hard Drive	512 GB M.2 PCIe Solid State Drive Class 50	1

Keyboard	Internal Dual Pointing Keyboard, English	1
Wireless	Dell Wireless™ 1820 802.11AC Dual-Band Wireless + BT 4.1 Card (2x2)	1
Primary Battery	6-cell (72 Whr) Lithium Ion Polymer Battery with ExpressCharge™	1
Power Supply	180W AC Adapter 7.4mm	1
Carrying Case	Provide a protective carrying case.	1
External Monitor	Dell 27" 4K Ultrasharp Monitor (or latest equivalent)	1
External Keyboard and Mouse	K350 wireless keyboard and M510 wireless mouse by Logitech.	1
Warranty	5 Years ProSupport Plus with Next Business Day Onsite	1

B. Mobile Workstation hardware and warranty shall be registered to OWNER.

C. Mobile Workstation and all accessories shall be handed over to OWNER at Final Completion of the project.

D. All programming/configuration software specified in Sections 17120 – Programmable Logic Controllers.

E. A full complement of all digital hardware manufacturers' support software shall be provided.

PART 3 – EXECUTION

3.01 REQUIREMENTS

A. Refer to Section 17000, Part 3 of the Specifications.

- END OF SECTION -

SECTION 17185

NETWORKS

PART 1 – GENERAL

1.1 THE REQUIREMENT

A. The CONTRACTOR shall furnish, test, install and place in satisfactory operation all copper and fiber optic Ethernet distributed control system and process information local area networks complete with all spare parts, accessories, and appurtenances as herein specified and as shown on the Drawings.

1.2 RELATED WORK SPECIFIED ELSEWHERE

A. Scope and General Requirements

B. Digital System Hardware Configuration

C. Cabinets and Panels

1.3 GENERAL INFORMATION AND DESCRIPTION

A. These Specifications are intended to give a general description of what is required, but do not cover all details which will vary in accordance with the requirements of the equipment furnished. They are, however, intended to cover the furnishing, the shop testing, the delivery and complete installation and field testing, of all materials, equipment and appurtenances for complete systems herein specified, whether specifically mentioned in the specification or not.

B. For all units there shall be furnished and installed all necessary and desirable accessory equipment and auxiliaries whether specifically mentioned in these Specifications or not. This installation shall incorporate the highest standards for the type of service shown on the Drawings including field testing of the entire installation and instruction of operating personnel in the care, operation, and maintenance of all equipment.

C. All Ethernet network equipment shall be of first class workmanship and shall be entirely designed and suitable for the intended services. All materials used in fabricating the equipment shall be new and undamaged.

1.4 SUBMITTALS

A. General: The CONTRACTOR shall submit shop drawings and Operation and Maintenance instructions and other information as specified in accordance with the Section entitled "Submittals".

B. Operations and Maintenance Manuals: The CONTRACTOR shall submit operation and maintenance manuals in accordance with the procedures and requirements set forth in the Section entitled "Submittals".

PART 2 – EQUIPMENT

2.1 ETHERNET NETWORKS - GENERAL

A. The network topology shall be as shown on the Drawings, consisting of a combination of twisted pair copper and multiple strand fiber optic cable to accomplish the data transmission requirements specified herein. Each connected device shall be equipped with its own network interface units.

B. Bi-directional communications between the network and network connected equipment shall be provided by network interface units. The network interface units shall be common to all equipment and shall include all required modems, communications processors and memories to provide a transparent interface between the network(s) and the connected devices.

C. A multilayered peer-to-peer communications protocol shall be employed. Protocol shall be CSMA/CD ("Ethernet"). Repeaters (with associated UPS systems) shall be provided where necessary to meet data highway distance or signal attenuation requirements whether or not they are specifically shown on the System Architecture Diagram, Drawing IG-GN-02.

2.2 LAN SWITCHES

A. Fiber optic transceivers shall be fully compatible with the multi-mode fiber-optic cable and SC type connectors specified in this section. Verify compatibility with manufacturers prior to ordering equipment.

B. For LCP-SS12 furnish, install and configure an industrial, managed LAN switch with a minimum of 8 copper Fast Ethernet ports (RJ45) and 2 Gigabit combo ports (SFP slots) for multimode fiber optic cable (for future use by City). Fiber ports shall be SC type. LCP-SS12 LAN switches shall be Allen-Bradley Stratix 5700 Series, model 1783-BMS10CGA, with two (2) 1783-SFP1GSX 1000BASE-SX multi-mode fiber transceivers or equivalent by Phoenix Contact, Hirschmann, Moxa or Engineer approved equal.

C. For LCP-SS13 furnish, install and configure an industrial, managed LAN switch with a minimum of 4 copper Fast Ethernet ports (RJ45) and 2 Gigabit combo ports (SFP slots) for multimode fiber optic cable. Fiber ports shall be SC type. LCP-SS13 LAN switch shall be Allen-Bradley Stratix 5700 Series, model 1783-BMS06SGA, with two (2) 1783-SFP1GSX 1000BASE-SX multi-mode fiber transceivers or equivalent by Phoenix Contact, Hirschmann, Moxa or Engineer approved equal.

2.3 SHIELDED TWISTED PAIR (STP) ETHERNET CABLES FOR INSIDE CONDUIT

A. Twisted pair patch cabling for Ethernet connections shall be 4-pair, 24 AWG solid Category 6 (CAT6) shielded twisted pair (STP) cable with 100% foil shield, professionally installed RJ-45 connectors, and strain relief boots.

B. Twisted pair patch cabling for the CCTV camera network shall be furnished and installed as follows:

1. CONTRACTOR shall furnish and install all conduit and electrical boxes required for installation of the intrusion switch wiring and CCTV camera system CAT6 cables.

2. CCTV Camera system subcontractor shall furnish, install (pull) and terminate all CAT6 cable for the CCTV cameras and wiring for the intrusion switches.

3. See Section 13501 for more information on the CCTV System.

2.4 TWISTED PAIR PATCH CABLES FOR INSIDE CABINETS/PANELS

A. Patch cables shall be CAT 6, 24AWG stranded and color coded for each connected device. Patch cables shall be factory assembled with connector and PVC snag free boot. Black Box EVNSL6A, or equal.

2.5 FIBER OPTIC MEDIA CONVERTERS

A. Where indicated, fiber optic media converters shall be provided to transform the specified copper Ethernet links into an optical signal suitable for transmission over the fiber optic cable specified herein. Fiber optic media converters shall be mounted within the panel enclosure on a din rail.

B. Optic Media shall meet the following minimum performance requirements:

1. Input Power: 110 VAC.

2. Operating temperature: -40 to +167° F (-40 to +75° C).

3. Operating Humidity: 5 to 95% noncondensing.

4. Wavelength: 850 nanometers.

5. Fiber Connector Type: Multi-mode SC.

6. Ports:

a. Two 10-/100-/1000-Mbps copper switch ports.

b. One 1000-Mbps multi-mode fiber SC port.

C. Fiber optic media converters shall be Extreme Media Converter Switch model LBH2001A-P-SC with DIN rail mounting bracket kit or rackmount kit (as required) and all required accessories, as manufactured by Black Box or Engineer approved equal.

2.6 MULTI-MODE FIBER OPTIC CABLE (ETHERNET NETWORKS)

A. Each fiber optic cable segment shall contain three (3) optical tubing pairs (6 fiber strands).

B. Fiber optic cable shall meet or exceed the following specifications:

1. Type: multi-mode, tight buffered, riser rated cable. Cable shall be suitable for indoor and outdoor application; burial in conduit.

2. Wavelength: 850/1310nm.

3. Fiber strand diameter: 62.5/125 micron.

4. Minimum bend radius: 5.7 inches.

5. Operating temperature range: -40 to +85 degrees Celsius.

6. Maximum attenuation: 3.5/1.5 dB/km.

7. Standards

   a. OM1 ISO/IEC 11801.

   b. OFNR (UL 166) and FT4 (CSA C22.2 No. 232) flame retardancy.

C. Fiber optic cable shall be LASER ULTRA-FOX part number BX006DWLS9KR, or latest version, as manufactured by Optical Cable Corporation (OCC), or Engineer approved equal.

D. All fiber pairs, active and inactive, shall be terminated with mechanically spliced, field installable connectors. Connections shall have a typical loss of 0.3 dB or better and shall provide stable optical performance after numerous rematings. Heat or UV cured connections shall not be acceptable. Connectors shall be Corning Unicam, or equal.

E. Fiber optic cables shall be provided as shown on System Architecture Diagram, Drawing IG-GN-02.

F. Fiber Optic Cables shall be furnished and installed as follows:

1. The Instrumentation Supplier shall furnish all fiber optic cables and test all fiber optic cable strands prior to installation by the CONTRACTOR.

2. The CONTRACTOR shall install (pull) all fiber optic cables.

3. The Instrumentation Supplier shall terminate and then retest all installed fiber optic cables (both active and spare).

4. The Instrumentation Supplier shall measure the dB loss of each fiber over the cable length using handheld light source and power meter and provide reports of the test results to the Engineer for approval. The fiber optic tests shall be witnessed by the CONTRACTOR.

5. The Instrumentation Supplier shall replace any cable or connector that exceeds its specified loss limits.

2.7 FIBER OPTIC CABINETS, PATCH PANELS

A. Fiber optic patch panels shall be provided as shown on the System Architecture Diagram, Drawing IG-GN-02.

B. Terminate all incoming fiber optic tubing pairs (both active and spares) inside all patch panels.

C. Furnish and install all fiber patch cables between the patch panel and network devices. Patch cables shall be manufactured by Black Box, DINSpace, Corning or Engineer approved equal.

D. Compact patch panels shall be SNAP Compact Fiber Optic Patch Panel by DINSpace, equivalent by Blackbox, Corning, or Engineer approved equal. Patch panels shall have adapter plates for a minimum of six (6) multi-mode fibers with SC type connectors that are fully compatible with the fiber cable specified herein.

E. Each fiber port and fiber strand shall be labeled by the Instrumentation subcontractor.

PART 3 – EXECUTION

(NOT USED)

- END OF SECTION -

SECTION 17190

UNINTERRUPTIBLE POWER SYSTEMS

PART 1 – GENERAL

1.01 THE REQUIREMENT

A. The Contractor shall furnish, test, install and place in satisfactory operation all uninterruptible power systems, with all spare parts, accessories, and appurtenances as herein specified and as shown on the Drawings.

B. One UPS shall be provided for each programmable logic controller (PLC) and its appurtenant equipment provided under this Contract. However, courtesy receptacles in PLC cabinets shall not be powered by the UPS.

C. UPS's shall be mounted in or near enclosures containing digital hardware, unless otherwise specified or shown on the Drawings, as follows:

1. UPS's for control panels containing PLCs shall be mounted either within the cabinet or in an adjacent cabinet of suitable environmental rating.

2. Where the UPS is mounted within a dedicated enclosure, that enclosure shall be properly sized for heat dissipation and all other applicable requirements as specified in Section 17500 and its subordinate Sections.

3. Where the UPS is mounted within the PLC cabinet, it shall not interfere with access to other equipment or wiring within the panel (i.e., it shall not be necessary to move or remove the UPS to remove or service other panel-mounted equipment). For floor-mounted PLC cabinets with bottom wiring access (including those cabinets with legs), the UPS shall be placed on a dedicated shelf within the cabinet.

1.02 RELATED WORK SPECIFIED ELSEWHERE

A. Section 17000 – Control and Information System Scope and General Requirements

B. Section 17100 – Control and Information System Hardware, General

C. Section 17120 – Programmable Logic Controllers

1.03 SUBMITTALS

A. The Contractor shall submit UPS sizing calculations for all UPS's furnished under this Contract in accordance with Section 17030 - Control and Information System Submittals.

PART 2 – EQUIPMENT

2.01 UNINTERRUPTIBLE POWER SYSTEMS

A. Each UPS shall consist of a freestanding UPS module and battery modules as required to meet backup run time requirements.

B. UPS's shall be true double conversion on-line type. Each UPS shall be sized to match the maximum power requirements of the associated digital equipment, control panel power supplies and accessories. Under normal operation, the AC power shall be converted to DC. The DC power from the battery charger shall supply an inverter and maintain the battery module at full charge. The AC output from the inverter shall be fed to the associated digital equipment power supply unit and/or other equipment power supplies as appropriate. Upon loss of the AC supply, the inverter shall continue to supply normal power to the device, drawing DC from the batteries.

C. An automatic bypass switch shall be provided . The transfer switch shall be of the solid state, make-before-break type and shall automatically transfer load from the inverter to the AC line in the event of an inverter malfunction. The total transfer time shall be 5 milliseconds or less. The transfer switch shall be provided with a manual override.

D. A manually operated maintenance bypass switch shall be provided for each UPS installation to allow hardware to be powered while the UPS is removed for maintenance. The bypass switch shall be the make-before-break type to ensure continuous power to the associated PLC.

E. Loss of AC power shall be monitored on the line side of the UPS and reported via normally closed (fail safe) unpowered contacts to the associated PLC/RTU.

F. Each UPS shall meet the following requirements:

1. Input voltage shall be 117 VAC, single phase, 60 Hz.

2. Voltage regulation shall be +/-5 percent for line and load changes.

3. The output frequency shall be phase-locked to the input AC line on AC operation and shall be 60 hertz +/-0.5 percent when on battery operation.

4. The batteries shall be of the sealed, lead acid or lead calcium gelled electrolyte type, or VRLA absorbed glass mat (AGM) type. The battery modules shall have a minimum full load backup time of 30 minutes for PLC-based control panels, and 45 minutes for remote telemetry units.

5. A status monitoring and control panel shall be provided and shall include the following:

a. Status indicating lights for both normal and abnormal conditions.

b. Individual alarm contacts that shall close upon loss of the AC line, low battery level or operation of the static transfer switch. Contacts shall be wired to the closest discrete input subsystem. Alternatively, an RS-232 or USB port shall

provide UPS status to an operator workstation. All required interface software and hardware shall be provided.

c. Circuit breaker for the AC input.

6. Sound absorbing enclosure.

7. EMI/RF noise filtering.

8. Surge protection shall be provided on the AC input circuit, which shall have a UL TVSS clamping voltage rating of 400 V with a <5 ns response time.

G. UPS systems shall be Model 9SX as manufactured by Eaton, equivalent by APC or Engineer approved equal.

PART 3 – EXECUTION

3.01 REQUIREMENTS

A. Refer to Section 17000, Part 3 of the Specifications.

- END OF SECTION -

SECTION 17500

ENCLOSURES, GENERAL

PART 1 – GENERAL

1.01 THE REQUIREMENT

A. The Contractor shall furnish, test, install and place in satisfactory operation the control enclosures, with all spare parts, accessories, and appurtenances as specified herein and as shown on the Drawings.

B. Control enclosures shall be assembled, wired, and tested in the instrumentation subcontractor's own facilities, unless specified otherwise. All components and all necessary accessories such as power supplies, conditioning equipment, mounting hardware, signal input and output terminal blocks, and plug strips that may be required to complete the system shall be provided.

1.02 RELATED WORK SPECIFIED ELSEWHERE

A. Section 17000 – Control and Information System Scope and General Requirements

B. Section 17100 – Control and Information System Hardware, General

C. Section 17510 – Cabinets and Panels

D. Section 17550 – Panel Instruments and Accessories

E. Section 17560 – Surge Protection Devices

F. Section 17600 – Unpowered Instruments, General

G. Section 17700 – Powered Instruments, General

H. Refer to Division 16 for additional requirements for cable, circuit breakers, disconnect switches, etc.

1.03 GENERAL INFORMATION AND DESCRIPTION

A. The cabinet itself and all interior and exterior equipment shall be identified with nameplates. The equipment shall be mounted such that service can occur without removal of other equipment. Face mounted equipment shall be flush or semi-flush mounted with flat black escutcheons. All equipment shall be accessible such that adjustments can be made while the equipment is in service and operating. All enclosures shall fit within the allocated space as shown on the Drawings.

B. Either manufacturer-standard or custom cabinetry may be furnished subject to the requirements of the Contract Documents and favorable review by the City.

C. Due consideration shall be given to installation requirements for enclosures in new and existing structures. The Contractor shall examine plans and/or field inspect new and existing structures as required to determine installation requirements and shall coordinate the installation of all enclosures with the City and all affected contractors. The Contractor shall be responsible for all costs associated with installation of enclosures, including repair of damage to structures (incidental, accidental or unavoidable).

1.04 TOOLS, SUPPLIES AND SPARE PARTS

A. Tools, supplies and spare parts shall be provided as specified in Section 17050 - Tools, Supplies and Spare Parts. In addition, the spare parts items shall be provided as specified in the individual cabinet and panel specification sections.

PART 2 – PRODUCTS

2.01 TERMINAL BLOCKS

A. Terminal blocks shall be assembled on non-current carrying galvanized steel DIN mounting rails securely bolted to the cabinet subpanel. Terminals shall be of the screw down pressure plate type as manufactured by Phoenix Contact, Weidmuller, Wieland, Square D, or equal.

B. Power terminal blocks for both 120 VAC and 24 VDC power shall be single tier with a minimum rating of 600 volts, 30 amps.

C. Signal terminal blocks shall be single tier with a minimum rating of 600 volts, 20 amps.

PART 3 – EXECUTION

3.01 FABRICATION

A. Enclosures shall provide mounting for power supplies, control equipment, input/output subsystems, panel-mounted equipment and appurtenances. Ample space shall be provided between equipment to facilitate servicing and cooling.

B. Enclosures shall be sized to adequately dissipate heat generated by equipment mounted inside the panel. If required, one or more of the following shall be provided to facilitate cooling:

1. Louvered openings near the bottom and top (NEMA 12 cabinets only).

2. Thermostatically controlled, low noise internal air blowers (initial setpoint 75°F) to circulate air within the enclosure, maintaining a uniform internal temperature.

3. Thermostatically controlled, low-noise cooling fans to circulate outside air into the enclosure, exhausting through louvers near the top of the cabinet (NEMA 12 cabinets only). Air velocities through the enclosure shall be minimized to assure quiet operation.

4. All openings in cabinets and panels shall be fitted with dust filters.

C. Enclosures shall be constructed so that no screws or bolt heads are visible when viewed from the front. Punch cutouts for instruments and other devices shall be cut, punched, or drilled and smoothly finished with rounded edges.

D. The temperature inside each enclosure containing digital hardware (i.e., cabinet, panel or console) shall be continuously monitored and shall generate an alarm to the nearest PLC if the temperature rises to an adjustable, preset high temperature. This thermostat shall be independent and separate from the thermostat used to control the temperature in the enclosure described above. Enclosure interior temperature alarm shall be displayed on the HMI.

E. Intrusion alarm switches shall be provided on all enclosures containing digital hardware and shall generate an alarm to the nearest PLC when any enclosure door is opened.

F. Terminals shall be marked with a permanent, continuous marking strip. One side of each terminal shall be reserved exclusively for field incoming conductors. Common connections and jumpers required for internal wiring shall not be made on the field side of the terminal. Subject to the approval of the Engineer, a vendor's pre-engineered and prefabricated wiring termination system will be acceptable.

G. Wiring within cabinets, panels, and consoles shall be installed neatly and shall comply with accepted standard instrumentation and electrical practices. Power, control and signal wiring shall comply with Division 16 of the Specifications, except that the minimum wire size for discrete signal wiring may be 16 AWG, and for analog wiring may be 18 AWG. For each pair of parallel terminal blocks, the field wiring shall be between the blocks.

H. Separate terminal strips shall be provided for each type of power and signal used within each cabinet. Where applicable, terminal strips for different voltages of discrete signal wiring shall also be separated. Terminal strips shall be labeled as to voltage and function.

I. All wiring shall be bundled and run open or enclosed in vented plastic wireway as required. Wireways shall be oversized by a minimum of 10%; overfilled wireways shall not be acceptable. All conductors run open shall be bundled and bound at regular intervals, not exceeding 12 inches, with nylon cable ties. Care shall be taken to separate electronic signal, discrete signal, and power wiring.

J. Spare field wiring shall be bundled, tied, and labeled as specified above, and shall be neatly coiled in the bottom of the cabinet.

K. All installed spare I/O hardware shall be wired along with live I/O wiring to the field wiring terminal blocks within the cabinet. Where space for spare I/O modules has been provided with the PLC backplane or DIN-rail mounting system, corresponding space for wiring, surge protection, and terminations shall be furnished within the cabinet.

L. A copper ground bus shall be installed in each cabinet, and shall be connected to the building power ground.

M. Interior panel wiring shall be tagged at all terminations with machine-printed self-laminating labels. Labeling system shall be Brady TLS 2200 Printer with TLS 2200®/TLS

PC Link™ labels, or equivalent system by Seton or Panduit. The wire numbering system and identification tags shall be as specified in Section 16123 - Building Wire and Cable. Field wiring terminating in panels shall be labeled in accordance with the requirements of Section 16123. Where applicable, the wire number shall be the ID number listed in the input/output schedules.

N. Wires shall be color coded as follows:

Equipment Ground - GREEN

120 VAC Power - BLACK
120 VAC Power Neutral - WHITE

120 VAC Control (Internally Powered) - RED
120 VAC Control (Externally Powered) - YELLOW

24 VAC Control - ORANGE

DC Power (+) - RED
DC Power (-) - BLACK
DC Control - BLUE

Analog Signal – BLACK/WHITE or BLACK/RED

O. Enclosures shall be provided with a main circuit breaker and a circuit breaker on each individual branch circuit distributed from the panel. Main breaker and branch breaker sizes shall be coordinated such that an overload in a branch circuit will trip only the branch breaker but not the main breaker.

P. Enclosures with any dimension larger than 36 inches shall be provided with 120-volt duplex receptacles for service equipment and LED service lights. Power to these devices shall be independent from the PLC power supply and its associated uninterruptible power system.

Q. Where applicable, enclosures shall be furnished with red laminated plastic warning signs in each section. The sign shall be inscribed "WARNING - This Device Is Connected to Multiple Sources of Power". Letters in the word "WARNING" shall be 0.75 inch high, white.

R. The interconnection between equipment and panel shall be by means of flexible cables provided to permit withdrawal of the equipment from the cabinet without disconnecting the plugs.

3.02 PAINTING/FINISHING

A. All steel enclosures shall be free from dirt, grease, and burrs and shall be treated with a phosphatizing metal conditioner before painting. All surfaces shall be filled, sanded, and finish coated by spraying a 1-2 mil epoxy prime coat and smooth, level, high grade textured finish between flat and semi-gloss shine. The colors shall be selected by the City from a minimum of six color samples provided. Refer to Division 9 for additional requirements.

B. Materials and techniques shall be of types specifically designed to produce a finish of superior quality with respect to adherence, as well as impact and corrosion resistance.

C. Panels fabricated from stainless steel shall not be painted.

D. Panels fabricated from non-metallic materials (e.g., FRP) shall be gel-coated and shall not be painted.

3.03 INSTALLATION

A. Refer to Section 17000 for additional requirements.

- END OF SECTION -

SECTION 17510

CABINETS AND PANELS

PART 1 – GENERAL

1.01 THE REQUIREMENT

A. The Contractor shall furnish, test, install and place in satisfactory operation the cabinets and panels, with all spare parts, accessories, and appurtenances as specified herein and as shown on the Drawings.

1.02 RELATED WORK SPECIFIED ELSEWHERE

A. Section 17000 – Control and Information System Scope and General Requirements

B. Section 17100 – Control and Information System Hardware, General

C. Section 17500 – Enclosures, General

D. Section 17910 – Instrument Schedule

E. Section 17950 - Functional Control Descriptions

PART 2 – PRODUCTS

2.01 CABINETS AND PANELS

A. Cabinets and panels shall be formed or welded construction, reinforced with Unistrut, Powerstrut, or equal to facilitate mounting of internal components or equipment. Sufficient access plates and doors shall be provided to facilitate maintenance and testing of the cabinet's equipment. Doors shall be removable. Cabinets and panels with any dimension 36 inches or greater shall be provided with removable lifting lugs designed to facilitate safe moving and lifting of the panel during installation. All doors shall be fitted with common-keyed locks.

B. Cabinets and panels shall be minimum 14 USS gauge. Cabinets and panels with any dimension greater than 36 inches shall be 12 USS gauge.

C. Cabinets and panels located inside buildings, but located in areas other than climate controlled (heated and air conditioned) electrical or control rooms, shall be as a minimum 316 stainless steel NEMA 4X construction, or as specified or shown on the Drawings for hazardous area classification (Class, Division, Group), or submersible (NEMA 6) applications. Epoxy coated cast copper-free aluminum construction shall also be acceptable for NEMA 4, 6 and 7 applications. Cabinets located in storage/feed areas for chlorine or other applicable corrosive chemicals shall be of non-metallic construction, rated NEMA 4X, and fully compatible with the associated chemical.

D. Cabinets and panels within climate controlled (heated and air-conditioned) electrical or control rooms shall be all steel fully enclosed NEMA 12 units with gasketed doors.

E. Cabinets and panels shall have doors on the front and shall be designed for front access. NEMA 12 cabinets shall be fitted with three-point door latches. Doors for NEMA 4X cabinets shall be all stainless steel with three-point latches. Door hardware on NEMA 4X cabinets located in chemical storage/feed areas shall be non-corrosive in that environment.

F. Panels and cabinets located outside fence-secured areas shall be fitted with padlockable latch kits.

G. All cabinets and panels shall be provided with drawing pockets for as-built panel drawings. One copy of the appropriate panel as-built drawings shall be furnished and left in the pocket of each panel.

H. Panels with any dimension greater than 36 inches that contain a programmable controller (PLC) shall be provided with a folding laptop programmer shelf on the inside of the door. When deployed, the laptop shelf shall not be greater than 48 inches above finished floor. Laptop shelf shall be fitted to door with factory applied weld-studs. Weld discoloration and enclosure penetrations will not be accepted.

I. Unless otherwise noted, panel-mounted control devices (OIUs, hand switches, etc.) requiring operator access shall be mounted between 48 and 60 inches above the floor or work platform.

J. Cabinets and panels shall be prefabricated cabinets and panels by Hoffman or Saginaw Control and Engineering (SCE). The Contractor may optionally provide cabinets that are custom-fabricated by the instrumentation subcontractor or by a reputable panel fabrication shop acceptable to the Engineer.

PART 3 – EXECUTION

3.01 REQUIREMENTS

A. Refer to Section 17500 for additional requirements.

- END OF SECTION -

SECTION 17550

PANEL INSTRUMENTS AND ACCESSORIES

PART 1 – GENERAL

1.01 THE REQUIREMENT

A. The Contractor shall furnish, test, install and place in satisfactory operation the panel instruments and accessories, with all spare parts, accessories, and appurtenances as specified herein and as shown on the Drawings.

1.02 RELATED WORK SPECIFIED ELSEWHERE

A. Section 17000 – Control and Information System Scope and General Requirements

B. Section 17100 – Control and Information System Hardware, General

C. Section 17500 – Enclosures, General

D. Section 17910 – Instrument Schedule

E. Section 17950 – Functional Control Descriptoins

1.03 GENERAL INFORMATION AND DESCRIPTION

A. All equipment mounted on the face of a panel shall conform to the same NEMA rating specified for the panel construction.

1.04 TOOLS, SUPPLIES AND SPARE PARTS

A. Tools, supplies and spare parts shall be provided as specified in Section 17050 - Tools, Supplies and Spare Parts.

PART 2 – PRODUCTS

2.01 DIGITAL DISPLAY/TRANSMITTERS

A. Digital display/transmitters shall be 4 digit with 0.56" high red LED display. Digital display/transmitters shall be provided with nameplate and scale calibrated to match the calibration of the primary element. The unit shall be designed primarily for use with 4-20 mA current loop signal circuits. Digital display/transmitter operating voltage shall be 115 VAC 10%, 60 Hz. Digital display/transmitter controls shall include three (3) front-panel pushbuttons for modifying alarm values and device setup. A regulated and isolated 24 V excitation power supply shall be provided. Digital display/transmitters shall be suitable for outdoor service and shall be NEMA 4X, IP65 front. Digital display/transmitters shall be model PD765-6R3-10 by Precision Digital, equivalent by RedLion or Engineer approved equal.

2.02 SIGNAL CONVERTERS

A. Signal converters shall be provided as required to provide control functions and to interface instrumentation and controls, equipment panels, motor control centers and other instrumentation and controls supplied under other Divisions to the controls provided herein.

B. General Requirements – Converters shall be of the miniature type, utilizing all solid-state circuitry suitable for mounting within new or existing cabinetry. Where sufficient cabinet space is not available, sub panels or supplemental enclosures shall be provided. Power supply shall be 120V, 60 hertz where required by the converter. Repeatability shall be 0.1% of span, deadband shall be 0.1% span, maximum. Where specific converters are not listed, but are required to interface with the process control system, they shall comply with the general requirements stated herein.

C. Current to Current Isolators – Current to current isolators shall be furnished where necessary to provide an isolated current loop, calculations or signal amplification between the plant process control system and instrumentation and control loops. Isolators shall be sized such that resistance of existing loops shall not exceed maximum rated resistance. Isolators shall be as manufactured by AGM, Moore Industries, Rochester Instrument Systems (RIS), Phoenix Contact, Weidmuller, Acromag, or equal.

D. Voltage to Current Transducers – Voltage to current (or current to voltage) transducers shall convert a voltage signal of one magnitude to a 4-20 milliamp DC current signal. The output current shall be directly proportional to the input signal voltage. Transducers shall be sized such that loop resistance does not exceed maximum rated resistance. Transducers shall be as manufactured by AGM, Moore Industries, Rochester Instrument Systems (RIS), Phoenix Contact, Weidmuller, Acromag, or equal.

E. Frequency to Current Transducers – Frequency to current transducers shall convert pulse-rate and pulse-duration signals to 4-20 mA, 24 VDC analog signals. Converters shall include field-adjustable input frequency range. Converter power shall be 120 VAC, 60 hertz. Transducers shall be sized such that loop resistance does not exceed maximum rated resistance. Transducers shall be suitable for signal transmission via leased telephone lines. Transducers shall be Series 5100 as manufactured by AGM, or equivalent by Moore Industries, Rochester Instrument Systems (RIS), Phoenix Contact, Weidmuller, Acromag, or equal.

F. Current to Frequency Transducers – Current to frequency transducers shall convert 4-20 mA, 24 VDC analog signals to pulse-rate and pulse-duration signals. Converters shall include field-adjustable output frequency range. Converter power shall be 120 VAC, 60 hertz. Transducers shall be sized such that loop resistance does not exceed maximum rated resistance. Transducers shall be suitable for signal transmission via leased telephone lines. Transducers shall be Series 5016 as manufactured by AGM, Moore Industries, Rochester Instrument Systems (RIS), Phoenix Contact, Weidmuller, Acromag, or equal.

G. Integrators – Integrators shall be provided as interchangeable plug-in modules with zero and span adjustment available on the front plate of the units. Output shall range from 0 to 0.1 through 0 to 10 pulses per second. Accuracy shall be ± 0.1% of input span. Integrators shall convert linear analog signals to pulse rate and provide a solid-state

output. Integrators shall be as manufactured by AGM Electronics, Moore Industries, Rochester Instrument Systems (RIS), Phoenix Contact, Weidmuller, Acromag, or equal.

H. Electronic Switches (Alarm Relays) – Electronic switches shall be furnished with a calibrated dial for adjusting set points. The input to the switch shall be 4-20 mADC, and the set point shall be adjustable over the full range. Unless otherwise noted, the dead band shall be fixed at less than 2 percent of span. The set point stability shall be ±0.1% per degree F. The repeatability shall be ±0.1% of span. The units shall be furnished with SPDT relays rated at 10 amperes at 115 VAC. Electronic switches shall be as manufactured by AGM, Moore Industries, Rochester Instrument Systems (RIS), Phoenix Contact, Weidmuller, Acromag, or equal.

I. RTD to Current Signal Converters – RTD to current signal converters shall convert a 3-wire RTD input signal to an isolated 4-20 mADC output signal. Each converter shall operate from a 120 VAC power source. Accuracy shall be 0.10 percent of span or better. Calibrated span of each converter shall be as indicated on the instrument list. The Contractor shall coordinate calibration of the signal converters with existing RTD elements. The signal converters shall be furnished in the manufacturer's standard enclosure for installation in an existing indoor electrical cabinet. Signal converters shall be as manufactured by AGM, Moore Industries, Rochester Instrument Systems (RIS), Phoenix Contact, Weidmuller, Acromag, or equal.

J. Interposing Relays – Where required to interface between motor control centers, equipment controls, and control panels, interposing relays and associated control wiring circuitry shall be furnished and installed to provide the monitoring and/or control functions specified herein. Interposing relays shall be small format type, DPDT, minimum 10 amp, 120 VAC contact rating. Relay coils shall be 120 VAC or 24 VDC as required. Relays shall have a flag indicator to show relay status, a pushbutton to allow manual operation of the relay, and an internal pilot light to indicate power to the coil. Relays shall be as manufactured by Square D, Potter & Brumfield, Allen-Bradley, or equal.

K. Timing Relays – Timing Relays (TR) shall be the general purpose plug-in type, Type JCK as manufactured by Square D Company, Cutler-Hammer/Westinghouse Electric Corporation equivalent, Allen-Bradley equivalent, or equal. Timing relays shall be electronic type with 120 VAC coils unless otherwise specified or indicated on the Drawings. Timers shall be provided with a minimum of two SPDT timed output contacts and instantaneous contacts where required. Contact ratings shall be the same as for interposing relays as specified above.

L. Intrinsically Safe Relays and Barriers – Intrinsically safe relays and barriers shall be provided where required to interface with equipment such as float level switches that are located in NFPA-classified hazardous areas. Intrinsically safe relays and barriers shall be FM approved and shall be manufactured by Pepperl and Fuchs, Crouse Hinds, Square D, or equal.

2.03 TOTALIZERS

A. Totalizing counters shall be provided for flush panel, spring-clip mounting. Face dimensions of the totalizing counters shall be no larger than 1-1/8-inches high by 2-inches wide. Totalizing counters shall contain eight digits. Height of the digits shall not be less than 5/32-inch. Numerals shall be white on a black background. The counter shall be non-resettable and shall be totally compatible for operation on the pulses supplied by the

associated instrument or integrator. The totalizing counter shall be capable of a maximum count rate of 25 counts/second.

B. Legend plates shall be provided for each of the totalizing counters with white letters on a black background with legends as specified below.

C. Totalizing counters shall be manufactured by Kessler-Ellis, or equal.

2.04 ACCESSORIES

A. Control operators such as pushbuttons (PB), selector switches (SS), and pilot lights (PL) shall be Cutler-Hammer/Westinghouse Type E34, Square D Company Type SK, or equal. Control operators shall be 30.5 mm, round, heavy-duty, oil tight NEMA 4X corrosion resistant.

B. Pushbuttons shall be non-illuminated, spring release type. Pushbuttons shall include a full guard. Panic stop/alarm pushbuttons shall be red mushroom type with manual-pull release. Selector switches shall be non-illuminated, maintained contact type. Pilot lights shall be of the proper control voltage, push-to-test LED type with light lens colors as specified below.

Color	Function
Red	Running (Open)
Green	Stopped or Off (Closed)
Amber	Fault
White	Other

C. Control operators shall have legend plates as specified herein, indicated on the Drawings, or otherwise directed by the Engineer. Legend plates shall be plastic, black field (background) with white lettering. Engraved nameplates shall be securely fastened above each control operator. If adequate space is not available, the nameplate shall be mounted below the operator.

D. Control operators for all equipment shall be as specified herein and of the same type and manufacturer unless otherwise specified or indicated on the Drawings.

E. Alarm horns shall be general-purpose type, panel-mounted, and shall be suitable for indoor or weatherproof service, as required. Power supply shall be either 115 VAC or 24 VDC. Horns shall be capable of producing 100 dB at 10 feet, and shall have adjustable volume. Horns shall be Vibratone series as manufactured by Federal Signal Corporation, McMaster-Carr equivalent, Edwards Signaling Company equivalent, or equal.

PART 3 – EXECUTION

3.01 REQUIREMENTS

A. Refer to Section 17500 for additional requirements.

- END OF SECTION -

SECTION 17560

SURGE PROTECTION DEVICES

PART 1 – GENERAL

1.01 THE REQUIREMENT

A. The Contractor shall furnish, install and place in satisfactory operation the transient voltage surge suppression (TVSS) devices as specified herein and as shown on the Drawings.

1.02 RELATED WORK SPECIFIED ELSEWHERE

A. Section 17000 - Control and Information System Scope and General Requirements

B. Section 17060 – Signal Conditioning Requirements

C. Section 17120 – Programmable Logic Controllers

D. Section 17500 – Enclosures, General

E. Section 17550 – Panel Instruments and Accessories

1.03 GENERAL INFORMATION AND DESCRIPTION

A. All surge protectors of each type provided under this Contract shall be furnished by a single manufacturer.

1.04 TOOLS, SUPPLIES AND SPARE PARTS

A. The following specific spare parts items shall be provided:

1. Five of each type of transient voltage surge suppression (TVSS) devices provided under this Contract.

PART 2 – PRODUCTS

2.01 ELECTRICAL TRANSIENT PROTECTION, GENERAL

A. All electrical and electronic elements shall be protected against damage due to electrical transients induced in interconnecting lines from lightning discharges and nearby electrical systems.

B. Manufacturer's Requirements: All transient voltage surge suppressor devices shall be multi stage serial devices manufactured by a company that has been engaged in the design, development, and manufacture of such devices for at least 5 years. Acceptable manufacturers shall be Phoenix Contact or Engineer approved equal. Transient voltage surge suppressor device design requirements shall include the following:

1. Transient voltage surge suppression devices shall be two part, DIN rail mounted, high density, plug-and-base modular terminal block format. The two part plug and base format shall facilitate arrestor module replacement without rewiring.

2. Surge suppression devices shall provide a combination of wire to ground and wire to wire protection.

3. Suppression devices shall be grounded via the grounded DIN rail.

4. Surge suppression devices shall be modular, single channel devices and shall utilize a combination of gas discharge tubes, varistors and suppression diodes in a multistage configuration to protect nominal voltage ranges between 5 VDC and 230 VAC.

5. Each surge suppression module shall provide local LED indication of arrestor status as well as dry contact output for remote indication of arrestor status the associated PLC to alert when arrestor replacement is required.

6. For surge suppression modules within control panels, for each group of up to twenty eight (28) surge suppression modules, provide a DIN rail mounted surge suppressor monitor/control module (or functional equivalent) to indicate and provide common group alert dry contact outputs to the local PLC I/O system for predictive fault monitoring. Individual status outputs shall be provided for device warning and device overload conditions. Each surge suppressor monitor/control module shall also provide the distribution of power for the LED status indication lights on each group of up to twenty eight (28) surge suppression modules serving the control panel field I/O wiring terminal block system.

7. Configure PLC to allow for remote status monitoring for each installed surge suppression monitor/control module device from the City's SCADA system. Provide all required additional PLC I/O as necessary to provide the specified surge suppression module group status monitoring functionality.

8. DIN rail mounted bases shall be modular type, screw or push-in wiring terminal type, with individually labeled terminals. Bases shall serve as the field terminal blocks between all panel-mounted devices and internal wiring and all field power, communications, I/O signal and ancillary wiring external to the panel.

C. Surge protection device installations shall comply with UL 94, the National Electric Code (NEC), and all applicable local codes.

D. Surge protection devices shall be installed as close to the equipment to be protected as practically possible.

E. Suppressor Locations: As a minimum, provide surge suppressors at the following locations:

1. At all connections between AC power, DC power and associated electrical and electronic equipment, including panels, cabinets, and rack assemblies, as well as at field mounted powered instruments (where new field instrumentation devices are specified to be furnished and installed).

2. Where new field instrumentation is specified to be furnished and installed, provide protection at both ends of all two-wire analog signal circuits and all four wire analog power/ signal circuits.

3. Where existing field instrumentation is to be reconnected to modified and new local control panels, provide protection at the panel end of all two-wire analog signal circuits and all four-wire analog power/ signal circuits.

4. At the panel end of all analog inputs and outputs and all discrete input (dry contact) circuits and discrete output (24 VDC or relay contact) circuits that extend to all devices outside of the PLC enclosure. Control panel field wiring terminal blocks for all discrete and analog inputs and outputs shall be DIN rail mounted, modular type with integral transient voltage surge suppression and other signal isolation and protective devices, as required. Terminal block wiring connections shall be screw or push-in type and shall accept 24-14 AWG wire; rated for the signals carried and labeled as manufactured by Phoenix Contact, or equal.

5. At each device termination point of copper-based communication cables (serial, parallel, Ethernet, Device Net, etc.).

6. On all telephone communications lines.

7. RF antenna cable radio terminus.

F. Surge suppressors shall be as follows:

1. 120-Volt power surge suppressor: The protector shall be PLUGTRAB series by Phoenix Contact, or Engineer approved equivalent.

2. 120-Volt powered, field mounted analog transmitter: The protector shall combine AC power protection and 4-20 mA signal line protection. The suppressor shall be SLAC series with continuous hinge Stainless Steel enclosure by EDCO or Engineer approved equivalent.

3. Two-wire field-mounted analog transmitter: 4-20 mA signal line protection shall be stainless steel pipe-type and shall be Phoenix Contact SURGETRAB S-PT1-24DC , or Engineer approved equivalent.

4. 4-20 mA analog input/output signal line protection at the panel side: The protector shall be PLUGTRAB IQ series by Phoenix Contact, or Engineer approved equivalent.

5. Two-wire discrete input/output signal line protection at the panel side: The protector shall be PLUGTRAB IQ series by Phoenix Contact, or Engineer approved equivalent.

6. Surge suppressors for copper-based data communication circuits: Shall be designed for the specific data communication media and protocol to be protected (e.g., telephone, serial, parallel, DeviceNet, coax, twinaxial, twisted pair, RF, etc.), and shall provide protection of equipment to within the equipment's surge withstand levels for applicable standard test wave forms of the following standards:

a. IEC 60-1 / DIN VDE 0432 part 2

b. CCITT K17 / DIN VDE 0845 part 2

c. IEEE C62.31

d. Shall be PLUGTRAB IQ, PLUGTRAB, or DATATRAB by Phoenix Contact, or Engineer approved equivalent.

7. Surge suppressors for Ethernet shall meet the following specifications and be grounded to earth ground as recommended by the manufacturer:

a. Class EA (CAT6A), for Gigabit Ethernet (up to 10 Gbps), token ring, FDDI/CDDI, ISDN, and DS1.

b. RJ45 attachment plug with separate grounding cable and ground connection snap-on foot for NS 35 DIN rails.

c. Shall be model DT-LAN-CAT.6+ by Phoenix Contact, or Engineer approved equivalent.

PART 3 – EXECUTION

3.01 REQUIREMENTS

A. Install in accordance with manufacture recommended practices and applicable codes.

B. Refer to Section entitled “Enclosures, General” for additional requirements.

- END OF SECTION -

SECTION 17600

UNPOWERED INSTRUMENTS, GENERAL

PART 1 – GENERAL

1.01 THE REQUIREMENT

A. The instrumentation subcontractor shall furnish, install, test and place in operation process instrumentation (flow elements, pressure switches, etc.) as scheduled herein together with all signal converters, transmitters, isolators, amplifiers, etc. to interface all instrumentation, panels, controls and process equipment control panels with the process controls as shown on the Drawings and as specified. The Contractor may elect to install primary elements (flowmeters, etc.) on process lines provided that the instrumentation subcontractor provides full on-site supervision during installation. Mounting of associated transmitters, indicators, power supplies, brackets and appurtenances shall be provided as specified herein and shown on the Drawings.

B. It is the intent of the Contract Documents that all process taps, isolation valves, nipples, penetrations, embedded instrumentation supports, conduit, wiring, terminations, and the installation of process instrumentation on process lines shall be provided under this Contract. The instrumentation subcontractor shall supervise installation of equipment provided under this Division where installation is provided by others.

C. Tapping and connections for primary process sensors shall be sized to suit each individual installation and the requirements of the instrument served. The Contractor shall ensure that the location, supports, orientation and dimensions of the connections and tapping for instrumentation furnished under this Division are such as to provide the proper bracing, the required accuracy of measurement, protection of the sensor from accidental damage and accessibility for maintenance while the plant is in operation. Isolation valves shall be provided at <u>all</u> process taps.

1.02 RELATED WORK SPECIFIED ELSEWHERE

A. Section 17000 – Control and Information System Scope and General Requirements

B. Section 17500 – Enclosures, General

C. Section 17698 – Instrumentation and Control System Accessories

D. Section 17700 – Powered Instruments, General

E. Unpowered instruments furnished with mechanical equipment shall be furnished, installed, tested and calibrated as specified elsewhere in the Contract Documents.

1.03 TOOLS, SUPPLIES AND SPARE PARTS

A. Tools, supplies and spare parts shall be provided as specified in Section 17050.

B. In addition to the above requirements, the instrumentation subcontractor shall provide spare parts as specified in individual instrument specification sections.

PART 2 – PRODUCTS

2.01 GENERAL

A. Unless otherwise specified, instruments shall be provided with enclosures to suit specified environmental conditions. Field-mounted devices shall be rugged and mounted on walls or pipe stanchions.

PART 3 – EXECUTION

3.01 INSTALLATION

A. Equipment shall be located so that it is accessible for operation and maintenance. The instrumentation subcontractor shall examine the Drawings and Shop Drawings for various items of equipment in order to determine the best arrangement for the work as a whole, and shall supervise the installation of process instrumentation supplied under this Division.

B. Field equipment shall be wall mounted or mounted on two-inch diameter pipe stands welded to a 10-inch square 1/2-inch thick base plate unless shown adjacent to a wall or otherwise noted. Materials of construction shall be aluminum or 316 stainless steel. Instruments attached directly to concrete shall be spaced out from the mounting surface not less than 1/2-inch by use of phenolic spacers. Expansion anchors in walls shall be used for securing equipment or wall supports to concrete surfaces. Unless otherwise noted, field instruments shall be mounted between 48 and 60 inches above the floor or work platform.

C. Embedded pipe supports and sleeves shall be Schedule 40, Type 316 stainless steel pipe, ASA B-36.19, with stainless steel blind flange for equipment mounting as shown on the Drawings.

D. Materials for miscellaneous mounting brackets and supports shall be 316 stainless steel construction.

E. Pipe stands, miscellaneous mounting brackets and supports shall comply with the requirements of Division 5 of the specifications.

3.02 ADJUSTMENT AND CLEANING

A. The instrumentation subcontractor shall comply with the requirements of Division 1 of these Specifications and all instrumentation and control system tests, inspection, and calibration requirements for all instrumentation and controls provided under this Contract and specified herein. The Engineer, or his designated representative(s), reserves the right to witness any test, inspection, calibration or start-up activity. Acceptance by the Engineer of any plan, report or documentation relating to any testing or commissioning activity specified herein shall not relieve the Contractor of his responsibility for meeting all specified requirements.

B. The instrumentation subcontractor shall provide the services of factory trained technicians, tools and equipment to field calibrate, test, inspect and adjust each instrument to its specified performance requirement in accordance with manufacturer's specifications and instructions. Any instrument which fails to meet any Contract requirements, or any published manufacturer performance specification for functional and operational parameters, shall be repaired or replaced, at the discretion of the Engineer, at no cost to the City. The Contractor shall bear all costs and provide all personnel, equipment and materials necessary to implement all installation tests and inspection activities for equipment specified herein.

C. At least 60 days before the anticipated initiation of installation testing, the Contractor shall submit to the Engineer a detailed description, of the installation tests to be conducted to demonstrate the correct operation of the instrumentation and control system.

D. Field instrument calibration requirements shall conform to the following:

1. The instrumentation subcontractor shall provide the services of factory trained instrumentation technicians, tools and equipment to field calibrate each instrument supplied under this Contract to its specified accuracy in accordance with the manufacturer's specification and instructions for calibration.

2. Each instrument shall be calibrated at 0, 25, 50, 75 and 100 percent of span using test instruments to simulate inputs and read outputs. Test instruments shall be rated to an accuracy of at least five (5) times greater than the specified accuracy of the instrument being calibrated. Where applicable, such test instruments shall have accuracy’s as set forth by the National Institute for Standards and Technology (NIST).

3. The instrumentation subcontractor shall provide a written calibration sheet to the Engineer for each instrument, certifying that it has been calibrated to its published specified accuracy. The Contractor shall submit proposed calibration sheets for various types of instruments for Engineer approval prior to the start of calibration. This sheet shall include but not be limited to date, instrument tag numbers, calibration data for the various procedures described herein, name of person performing the calibration, a listing of the published specified accuracy, permissible tolerance at each point of calibration, calibration reading as finally adjusted within tolerance, defect noted, corrective action required and corrections made.

4. If doubt exists as to the correct method for calibrating or checking the calibration of an instrument, the manufacturer's printed recommendations shall be used as an acceptable standard, subject to the approval of the Engineer.

5. Upon completion of calibration, devices shall not be subjected to sudden movements, accelerations, or shocks, and shall be installed in permanent protected positions not subject to moisture, dirt, and excessive temperature variations. Caution shall be exercised to prevent such devices from being subjected to overvoltages, incorrect voltages, overpressure or incorrect air. Damaged equipment shall be replaced and recalibrated at no cost to the City.

- END OF SECTION -

SECTION 17670

LEVEL SWITCHES (SUSPENDED FLOAT TYPE)

PART 1 – GENERAL

1.01 THE REQUIREMENT

A. The Contractor shall furnish, test, install and place in satisfactory operation the float level switches, with all spare parts, accessories, and appurtenances as herein specified and as shown on the Drawings.

1.02 RELATED WORK SPECIFIED ELSEWHERE

A. Control and Information System, General

B. Unpowered Instruments, General

PART 2 – PRODUCTS

2.01 LEVEL SWITCHES (SUSPENDED FLOAT TYPE)

A. Level switches of the direct acting float-operated design and shall meet the following specifications:

1. Casing - hermetically sealed, approximately 5-inch diameter conductive polypropylene casing float, containing microswitches. Ingress protection shall be IP 68.

2. Cable - Level switches shall be flexibly supported by means of a three-conductor cable with PVC (or nitrile/PVC) and EPDM rubber sheath. Cable lengths and materials selected shall be suitable for the installed application.

3. Liquid Density - Unless otherwise specified, media specific gravity is 0.95 to 1.05 g/cm3.

4. Microswitches - shall be one normally open and one normally closed. Microswitch electrical range shall be 250V/10A AC or 24V/10mA min. to 6A max.

5. Supports - Float hangers and supports shall be provided as shown on the installation detail drawings.

6. Float switches located in non-classified areas shall be Flygt ENM-10 as manufactured by Xylem, or Engineer approved equal. Economy type plastic float switches are not acceptable. Substitutions must meet all requirements described in this specification to be approved.

7. Float switches in classified areas shall be Class I Div. 1 rated. Provide an Ex-safety barrier for installation in control panels to protect against overvoltage. The Ex-safety barrier shall be of the same manufacturer as the float switch or equivalent device

that meets float switch manufacturers specifications for Ex-barriers. Float switches for classified areas shall be Flygt ENM-10 EX (black) as manufactured by Xylem, or Engineer approved equal. Economy type plastic float switches are not acceptable. Substitutions must meet all requirements described in this specification to be approved.

PART 3 – EXECUTION

3.01 REQUIREMENTS

A. Refer to Section 17600 - Unpowered Instruments, General.

- END OF SECTION -

SECTION 17698

INSTRUMENTATION AND CONTROL SYSTEM ACCESSORIES

PART 1 – GENERAL

1.01 THE REQUIREMENT

A. The Contractor shall furnish, test, install and place in satisfactory operation the instrumentation and control system accessories with all spare parts, and appurtenances as herein specified and as shown on the Drawings.

1.02 RELATED WORK SPECIFIED ELSEWHERE

A. Section 17000 – Control and Information System Scope and General Requirements

B. Section 17600 – Unpowered Instruments, General

C. Section 17700 – Powered Instruments, General

D. Section 16902 – Electric Controls and Relays

PART 2 – PRODUCTS

2.01 INSTRUMENTATION AND CONTROL SYSTEM ACCESSORIES

A. General: Accessories include various items of equipment that may be required in the system but are not scheduled. Accessories are shown on details, flow sheets or plans. Accessories are also called out in specifications for scheduled instruments and in the installation specifications. It is not intended, however, that each piece of hardware required will be specifically described herein. This subarticle shall be used as a guide to qualify requirements for miscellaneous hardware whether the specific item is described or not.

B. Process Tubing: Process tubing shall be 1/2 x 0.065-inch seamless, annealed, ASTM A-269 Type 316L stainless steel with Type 316 - 37 degrees stainless steel flared fittings or Swagelock or Parker-CPI flareless fittings.

C. Power, Control and Signal Cables: Power, control and signal wiring shall be provided under Division 16 of the Specifications.

D. Chemical Diaphragm Seals: Diaphragm seals shall be provided for isolation of pressure gauges, switches and transmitters attached to systems containing chemical solutions or corrosive fluids. As a minimum, seals shall be of all 316 stainless steel construction. In general, diaphragms shall be 316L stainless steel for operating pressures at or above 15 psi and elastomers for operating pressures below 15 psi. However, all components shall be non-reactive with the process fluid in all cases. Refer to the Instrument Schedules for specific materials requirements. Seal shall have fill connection, 1/4-inch NPT valved flush port and capable of disassembly without loss of filler fluid. Where specified, diaphragm

seals shall comply with the above requirements and shall be provided with 316 SS factory filled capillaries. Seals shall be Helicoid Type 100 HA, Mansfield & Green, Ashcroft, or equal.

E. Isolating Ring Seals: For solids bearing fluids, line pressure shall be sensed by a flexible cylinder lining and transmitted via a captive sensing liquid to the associated pressure sensing instrument(s).

1. Full Line Size Isolating Ring Seals - For all grit/sludge/slurry/scum applications or wherever the associated pressure instrument is used for control purposes, the sensor body shall be full line size wafer design. Except where noted on the Drawings and/or Instrument Schedule, full line size ring seals will not be required for return activated sludge (RAS) lines but will have tapped ring seals as specified in Item 2, below. Full line size isolating ring seals shall have 316 stainless steel housing and assembly flanges and Buna N flexible cylinder lining for in-line mounting. The wafer shall have through bolt holes or centerline gauge for positive alignment with the associated flanged piping. The captive liquid chamber and associated instrument(s) shall be furnished with threaded drain tap and plug. Isolating ring seals shall be RED Valve Series 40, Ronningen-Petter Iso-Ring, Moyno RKL Series W, Onyx Isolator Ring, or equal.

2. Tapped Isolating Ring Seals - For all other solids bearing fluids, pressure shall be sensed via a minimum 1/2" diameter spool-type isolating ring seal mounted on a 1/2" pipe nipple at 90° from the process piping. An isolation ball valve shall be provided between the process piping and the ring seal, and a cleanout ball valve shall be provided between the ring seal and the atmosphere. The pressure instrument shall be back or side mounted to the ring seal such that the gauge or readout may be viewed normally. Tapped isolating ring seals for solids service shall be Red Valve Series 42/742, Ronningen-Petter Iso-Spool, Onyx Isolator Ring, or equal.

F. Filling Medium: The filling medium between instruments, isolating ring seals and diaphragm seals shall be a liquid suitable for operation in an ambient temperature ranging from -10°F to +150°F. Filling medium shall be silicone unless oxidizing agents such as sodium hypochlorite are present, where halocarbon shall be used.

G. Isolation Valves: Isolation valves shall be 1/2 - inch diameter ball valves with 316 stainless steel body, 316 stainless steel ball, except that materials of construction shall be suitable for the associated process fluid where applicable (i.e., chemical service).

H. Sirens: Sirens shall be UL Listed, heavy duty, AC motor driven, weatherproof type capable of producing a minimum of 111 dBA at 10 feet. Power supply shall be 120 VAC, 60 hertz. Siren shall be McMaster-Carr Model 6392T11, Federal Signal Corporation equivalent, Edwards Signaling Company equivalent, or equal.

I. Strobe Lights: Strobe lights shall be high profile with Type 304 stainless steel base. Light is rated NEMA 4. Light shall have an outer dome to provide extra lens protection. Lens color shall be red. Surface mount hardware shall be included. Power supply shall be 120 VAC, 60 hertz. Strobe light shall be McMaster-Carr Model 5848T71, Federal Signal Corporation equivalent, Edwards Signaling Company equivalent, or equal.

PART 3 – EXECUTION

3.01 REQUIREMENTS

A. Refer to Section 17600, Part 3 of the specifications.

- END OF SECTION -

SECTION 17700

POWERED INSTRUMENTS, GENERAL

PART 1 – GENERAL

1.01 THE REQUIREMENT

A. The instrumentation subcontractor shall furnish, install, test and place in operation powered process instrumentation (flow elements, level transmitters, etc.) as scheduled herein together with all signal converters, transmitters, isolators, amplifiers, etc. to interface all instrumentation, panels, controls and process equipment control panels with the process control system as shown on the Drawings and as specified. Powered instruments are those instruments that require power (120 VAC or 24 VDC loop power) to operate. The Contractor may elect to install primary elements (flowmeters, etc.) on process lines provided that the instrumentation subcontractor provides full on-site supervision during installation. Mounting of associated transmitters, indicators, power supplies, brackets and appurtenances shall be provided as specified herein and shown on the Drawings.

B. It is the intent of the Contract Documents that all process taps, isolation valves, nipples, penetrations, embedded instrumentation supports, conduit, wiring, terminations, and the installation of process instrumentation on process lines shall be provided under this Contract. The instrumentation subcontractor shall supervise installation of equipment provided under this Division where installation is provided by others.

C. Tapping and connections for primary process sensors shall be sized to suit each individual installation and the requirements of the instrument served. The Contractor shall ensure that the location, supports, orientation and dimensions of the connections and tapping for instrumentation furnished under this Division are such as to provide the proper bracing, the required accuracy of measurement, protection of the sensor from accidental damage, and accessibility for maintenance while the plant is in operation. Isolation valves shall be provided at <u>all</u> process taps.

1.02 RELATED WORK SPECIFIED ELSEWHERE

A. Section 17000 – Control and Information System Scope and General Requirements

B. Section 17500 – Enclosures, General

C. Section 17600 – Unpowered Instruments, General

D. Section 17698 – Instrumentation and Control System Accessories

E. Powered instruments furnished with mechanical equipment shall be furnished, installed, tested and calibrated as specified elsewhere in the Contract Documents.

1.03 TOOLS, SUPPLIES AND SPARE PARTS

A. Tools, supplies and spare parts shall be provided as specified in Section 17050.

B. In addition to the above requirements, the instrumentation subcontractor shall provide one remote handheld configuration device for communication with all "smart" instruments furnished under this Contract. The devices shall be capable of performing configuration, test, and format functions from anywhere on the 4-20 mA signal loop for a particular transmitter or by direct connection. The configuration device shall be Fischer & Porter Model 50HC1000, Rosemount Model 375, or equal.

PART 2 – PRODUCTS

2.01 GENERAL

A. All instrumentation supplied shall be the manufacturer's latest design. Unless otherwise specified, instruments shall be solid state, electronic, using enclosures to suit specified environmental conditions. Microprocessor-based equipment shall be supplied unless otherwise specified. All instruments shall be provided with mounting hardware and floor stands, wall brackets, or instrument racks as shown on the Drawings, or as required.

B. Equipment installed in a hazardous area shall meet Class, Group, and Division as shown on the Drawings, to comply with the National Electrical Code.

C. All field instrumentation for outdoor service shall be provided with enclosures which are suitable for outdoor service, as follows:

1. Where the manufacturer's enclosures are suitable for outdoor service, they shall be provided with instrument sunshades. Sunshades shall be Style E as manufactured by O'Brien Corporation, or equal. Where possible, these instruments shall be mounted in a north facing direction.

2. Where the manufacturer's standard enclosures are not suitable for outdoor service, instruments shall be mounted in Field Panels in accordance with Section 17520, Field Panels, or may be furnished with Vipak instrument field enclosures as manufactured by O'Brien Corporation, equivalent by Intertec, or equal. It shall not be necessary to provide the manufacturer's NEMA 4 or 4X enclosures for instruments that will be subsequently mounted in separate field panels.

D. All instruments shall return to accurate measurement without manual resetting upon restoration of power after a power failure.

E. Unless otherwise shown or specified, local indicators shall be provided for all instruments. Where instruments are located in inaccessible locations, local indicators shall be provided and shall be mounted as specified in Subsection 3.01 (B) herein. All indicator readouts shall be linear in process units. Readouts of 0-100% shall not be acceptable (except for speed and valve position). Isolated outputs shall be provided for all transmitters.

F. Unless otherwise specified, field instrument and power supply enclosures shall be 316 stainless steel, fiberglass or PVC coated copper-free cast aluminum NEMA 4X construction.

G. Where separate elements and transmitters are required, they shall be fully matched, and unless otherwise noted, installed adjacent to the sensor. Special cables or equipment shall be supplied by the associated equipment manufacturer.

H. Electronic equipment shall utilize printed circuitry and shall be coated (tropicalized) to prevent contamination by dust, moisture and fungus. Solid-state components shall be conservatively rated for long-term performance and dependability over ambient atmosphere fluctuations. Ambient conditions shall be -20 to 50 degrees C and 20 to 100 percent relative humidity, unless otherwise specified. Field mounted equipment and system components shall be designed for installation in dusty, humid, and corrosive service conditions.

I. All devices furnished hereunder shall be heavy-duty type, designed for continuous industrial service. The system shall contain products of a single manufacturer, insofar as possible, and shall consist of equipment models that are currently in production. All equipment provided, where applicable, shall be of modular construction and shall be capable of field expansion.

J. All non-loop-powered instruments and equipment shall be designed to operate on a 60 Hz AC power source at a nominal 117 V, plus or minus 10 percent, except where specifically noted. All regulators and power supplies required for compliance with the above shall be provided. Where equipment requires voltage regulation, constant voltage transformers shall be supplied.

K. All analog transmitter and controller outputs shall be isolated, 4-20 milliamps into a load of 0-750 ohms, unless specifically noted otherwise. All switches shall have double-pole, double-throw contacts rated at a minimum of 600 VA, unless specified otherwise.

L. Materials and equipment used shall be UL approved wherever such approved equipment and materials are available.

PART 3 – EXECUTION

3.01 INSTALLATION

A. General

1. Equipment shall be located so that it is accessible for operation and maintenance. The instrumentation subcontractor shall examine the Drawings and shop drawings for various items of equipment in order to determine the best arrangement for the work as a whole and shall supervise the installation of process instrumentation supplied under this Division.

2. Electrical work shall be performed in compliance with all applicable local codes and practices. Where the Contract Documents do not delineate precise installation procedures, API RP550 shall be used as a guide to installation procedures.

B. Equipment Mounting and Support

1. Field equipment shall be wall mounted or mounted on two-inch diameter pipe stands welded to a 10-inch square by 1/2-inch thick base plate unless shown adjacent to a wall or otherwise noted. Materials of construction shall be aluminum or 316 stainless steel. Instruments attached directly to concrete shall be spaced out from the mounting surface not less than 1/2-inch by use of phenolic spacers. Expansion anchors in walls shall be used for securing equipment or wall supports to concrete surfaces. Unless otherwise noted, field instruments shall be mounted between 48 and 60 inches above the floor or work platform.

2. Embedded pipe supports and sleeves shall be schedule 40, 316 stainless steel pipe, ASA B-36.19, with stainless steel blind flange for equipment mounting as shown on the Drawings.

3. Materials for miscellaneous mounting brackets and supports shall be 316 stainless steel construction.

4. Pipe stands, miscellaneous mounting brackets and supports shall comply with the requirements of Division 5 of the specifications.

5. Transmitters shall be oriented such that output indicators are readily visible.

C. Control and Signal Wiring

1. Electrical, control and signal wiring connections to transmitters and elements mounted on process piping or equipment shall be made through liquid-tight flexible conduit. Conduit seals shall be provided where conduits enter all field instrument enclosures and all cabinetry housing electrical or electronic equipment.

3.02 ADJUSTMENT AND CLEANING

A. General

1. The instrumentation subcontractor shall comply with the requirements of Division 1 of these Specifications and all instrumentation and control system tests, inspection, and calibration requirements for all instrumentation and controls provided under this Contract and specified herein. The Engineer, or his designated representative(s), reserves the right to witness any test, inspection, calibration or start-up activity. Acceptance by the Engineer of any plan, report or documentation relating to any testing or commissioning activity specified herein shall not relieve the Contractor of his responsibility for meeting all specified requirements.

2. The instrumentation subcontractor shall provide the services of factory trained technicians, tools and equipment to field calibrate, test, inspect and adjust each instrument to its specified performance requirement in accordance with manufacturer's specifications and instructions. Any instrument which fails to meet any Contract requirements, or any published manufacturer performance specification for functional and operational parameters, shall be repaired or replaced, at the discretion of the Engineer, at no cost to the City. The Contractor shall bear all costs and provide all personnel, equipment and materials necessary to

implement all installation tests and inspection activities for equipment specified herein.

3. At least 60 days before the anticipated initiation of installation testing, the Contractor shall submit to the Engineer a detailed description, of the installation tests to be conducted to demonstrate the correct operation of the instrumentation supplied hereunder.

B. Field Instrument Calibration Requirements

1. The instrumentation subcontractor shall provide the services of factory trained instrumentation technicians, tools and equipment to field calibrate each instrument supplied under this Contract to its specified accuracy in accordance with the manufacturer's specification and instructions for calibration.

2. If the manufacturer's recommendations require calibration, each instrument shall be calibrated at 0, 25, 50, 75 and 100 percent of span using test instruments to simulate inputs and read outputs. Test instruments shall be rated to an accuracy of at least five (5) times greater than the specified accuracy of the instrument being calibrated. Where applicable, such test instruments shall have accuracy’s as set forth by the National Institute for Standards and Technology (NIST).

3. The instrumentation subcontractor shall provide a written calibration sheet to the Engineer for each instrument, certifying that it has been calibrated to its published specified accuracy. The Contractor shall submit proposed calibration sheets for various types of instruments for Engineer approval prior to the start of calibration. This sheet shall include but not be limited to date, instrument tag numbers, calibration data for the various procedures described herein, name of person performing the calibration, a listing of the published specified accuracy, permissible tolerance at each point of calibration, calibration reading as finally adjusted within tolerance, defect noted, corrective action required and corrections made.

4. If doubt exists as to the correct method for calibrating or checking the calibration of an instrument, the manufacturer's printed recommendations shall be used as an acceptable standard, subject to the approval of the Engineer.

5. Upon completion of calibration, devices calibrated hereunder shall not be subjected to sudden movements, accelerations, or shocks, and shall be installed in permanent protected positions not subject to moisture, dirt, and excessive temperature variations. Caution shall be exercised to prevent such devices from being subjected to overvoltages, incorrect voltages, overpressure or incorrect air. Damaged equipment shall be replaced and recalibrated at no cost to the City.

6. After completion of instrumentation installation, the instrumentation subcontractor shall perform a loop check. The Contractor shall submit final loop test results with all instruments listed in the loop. Loop test results shall be signed by all representatives involved for each loop test.

- END OF SECTION -

SECTION 17745
RADAR LEVEL MEASUREMENT SYSTEMS

PART 1 – GENERAL

1.01 THE REQUIREMENT

A. The Contractor shall furnish, test, install and place in satisfactory operation the radar liquid level measurement systems, with all spare parts, mounting brackets, accessories, and appurtenances as herein specified and as shown on the Drawings.

PART 2 – PRODUCTS

2.01 GENERAL REQUIREMENTS

A. The radar liquid level measurement sensor/transmitter shall operate on the frequency modulated continuous wave (FMCW) radar signaling technology at approximately 80 GHz frequency sweep. Sensor accuracy shall be a minimum of ±0.4 inches. Resolution shall be at least 0.1 percent of full range or +/-0.01 inch, whichever is greater. The instrument shall be repeatable to +/- 0.02 inch.

B. Radar level controller/display unit shall be remotely mounted from the sensor and shall include a remote digital display and operator interface that allows complete field configuration of all settings and control modes of the system. The transmitter shall compensate for temperature and air density. The unit shall provide level monitoring and volumetric calculation. Output level signal shall be linear, isolated 4 20 mA DC with HART. The units shall have as a minimum, the required number of programmable set points to perform the functions specified.

C. All elements shall be Factory Mutual certified for use in Class 1, Division 1, Groups C and D.

2.02 RADAR LEVEL SENSOR/TRANSMITTER

A. Each radar level measurement system shall include a radar level sensor/transmitter with the following specifications:

1. Enclosure:

    a. Aluminum IP66/IP68

2. Read Mounting threads: 1” NPT

3. Sensor/Transmitter Signal Output: Two-wire 4-20mA/HART

4. Radar Beam Angle: ≥ 3°

5. Radar Frequency: 80 GHz

6. Radar Range: 0-49.2’

7. Antenna Type: Plastic Horn Antenna

8. Sensor Materials: PVDF

9. Wireless Adjustment: via radar manufacturer Bluetooth phone or tablet app

10. Display: none

11. Approvals: c-UL-us, IEC

12. Hazardous Area Approvals:

    a. FM (IS) CL I, II, III, DIV1, GP ABCDEFG

13. ID Tag: Stainless Steel with tag number “LT-XXXXX”

14. Certificates: factory approved inspection certificate with test data

15. Mounting Hardware:

    a. all mounting hardware shall be metal for suitability in tropical climate

    b. provide a custom mounting solution as shown on the Instrumentation Detail Drawings.

B. The radar sensor shall be suitable for operating in ambient temperature range of -40 to + 176 °F.

C. Each Radar level antenna unit shall be VEGAPULS C 21 as manufactured by VEGA or Engineer approved 80GHz equivalent by Krohne, Siemens or Endress and Hauser.

2.03 RADAR LEVEL CONTROLLER/DISPLAY UNIT (REMOTE MOUNT)

A. Each radar level measurement system shall include a radar level measurement controller/display unit with the following minimum specifications:

1. Enclosure Protection Rating: IP40, NEMA 1 for control panel mounting only. For field mounting provide IP66/IP67 NEMA 4X.

2. Input Power: 24VDC

3. Operating Temperature Range: -4F to +158 degrees F

4. 1 x 4-20 mA sensor input

5. Approvals: c-UL-us, IEC

6. Hazardous Area Approvals (required if mounted outside control panel):

   a. All elements shall be Factory Mutual certified for use in Class 1, Division 1, Groups C and D.

   b. Ex approvals shall cover: ATEX/IEC/c-UL-us; installation Zone 2/DIV2, gas; intrinsically safe supply, Zone 0, 1, 2 (Class I Division 1, 2) + Zone 20, 21, 22 (Class II, III Division 1, 2)

7. Cable Entry: 1/2 inch NPT

8. Mounting: Inside Control Panel

9. Indication:

   a. Black and white LCD matrix display. Values shall be easy-to-read display from a distance in sunlight and darkness

   b. Loop powered LED backlight

10. Adjustment:

   a. On-site adjustment at the unit

   b. Smartphone / Tablet / PC via Bluetooth

11. ID Tag: Phenolic, mounted to inside of panel back plate with tag “LIT-XXXXX”

12. Certificates: factory approved inspection certificate with test data

B. Each Radar level measurement controller/display unit shall be VEGADIS 82 as manufactured by VEGA or Engineer approved equivalent by Krohne, Siemens or Endress and Hauser.

PART 3 – EXECUTION

3.01 REQUIREMENTS

A. Radar level sensor/transmitter units shall be mounted in accordance with radar manufacturer recommendations and as indicated on the Drawings.

B. Radar level controller/display units shall be control panel mounted in the location(s) indicated on the Instrumentation Detail Drawings.

SECTION 17910

INSTRUMENT SCHEDULE

PART 1 – GENERAL

1.01 THE REQUIREMENT

A. The Contractor shall furnish, test, install and place in satisfactory operation all instrumentation as herein specified and as shown on the Drawings.

1.02 RELATED WORK SPECIFIED ELSEWHERE

A. Section 17900 – Schedules and Control Descriptions

B. Section 17920 – Control System Input/Output Schedule

C. Section 17950 – Functional Control Descriptions

PART 2 -- INSTRUMENT SCHEDULE

2.01 REQUIREMENTS

A. Refer to Table 17910 following this section for a listing of the Division 17 furnished instrumentation.

PART 3 – EXECUTION

(NOT USED)

- END OF SECTION -

TABLE 17910
INSTRUMENT SCHEDULE

TAG	DESCRIPTION	SERVICE	RANGE/ SETPOINT	SIZE	SECTION	P&ID	NOTES
SECTION 17670 - Level Switch (Suspended Float Type)							
SS12-LSHH-0901	SS12 INFLUENT CHANNEL	LEVEL ALARM: HIGH-HIGH	TBD		17670	1I01	
SS12-LSLL-0901	SS12 INFLUENT CHANNEL	LEVEL ALARM: LOW-LOW	TBD		17670	1I01	
SS12-LSHH-1011	SS12 WETWELL	LEVEL ALARM: HIGH-HIGH	1.5 FT.		17670	1I01	
SS12-LSLL-1011	SS12 WETWELL	LEVEL ALARM: LOW-LOW	-5.0 FT.		17670	1I01	
SS13-LSHH-1011	SS13 WETWELL	LEVEL ALARM: HIGH-HIGH	1.5 FT.		17670	1I02	
SS13-LSLL-1011	SS13 WETWELL	LEVEL ALARM: LOW-LOW	-5.0 FT.		17670	1I02	
SECTION 17745 - Radar Level Indicating Transmitter/Sensor							
SS12-LE-0901	SS12 INFLUENT CHANNEL	LIQUID LEVEL	0-13.5 FT.		17745	1I01	2-Wire (24Vdc Loop Powered)
SS12-LE-1011	SS12 WETWELL	LIQUID LEVEL	0-17.0 FT.		17745	1I01	2-Wire (24Vdc Loop Powered)
SS13-LE-1011	SS13 WETWELL	LIQUID LEVEL	0-12.0 FT.		17745	1I02	2-Wire (24Vdc Loop Powered)

SECTION 17920

CONTROL SYSTEM INPUT/OUTPUT SCHEDULE

PART 1 – GENERAL

1.01 THE REQUIREMENT

A. The Contractor shall furnish, install, test, and place into satisfactory operation all PLC input and outputs as herein specified and as required for a complete functioning system.

1.02 RELATED WORK SPECIFIED ELSEWHERE

A. Section 17950 – Functional Control Descriptions: General

PART 2 -- CONTROL SYSTEM INPUT / OUTPUT SCHEDULE

2.01 REQUIREMENTS

A. Refer to Table 17920 following this section for a listing of the hardwired process I/O points and Table 17921 following this section for a listing of the digital (network based) I/O points.

PART 3 – EXECUTION

3.01 INPUT/OUTPUT TYPES

A. Signals transmitted or received via PLC input/output cards are as follows:

DO – Discrete Output

DI – Discrete Input

AO – Analog Output

AI – Analog Input

B. Signals transmitted or received via digital network communications are as follows:

DDO – Digital Discrete Output

DDI – Digital Discrete Input

DAO – Digital Analog Output

DAI – Digital Analog Input

C. All PLC data shall be made available to the HMI via its data link using similar tag names and numbers to facilitate consistency between the PLC and HMI databases.

D. Refer to Section entitled “Functional Control Descriptions for further description of input/output and HMI control interface requirements.

3.02 COMMON PLC INPUTS

A. The inputs listed in the table below shall be included for PLC-SS12 and PLC-SS13 in addition to the inputs listed in Section 17920.

Tag ID	Description	Type	State/Range	Comments
	Loop DC Power Supply No. 1	DI	Failure	
	Loop DC Power Supply No. 2	DI	Failure	
	UPS Bypass Switch Position	DI	Status	
	UPS on Utility Power (Normal)	DI	Status	
	UPS on UPS Power (Utility Lost)	DI	Fault	
	UPS Common Fault	DI	Fault	
	UPS Low Battery	DI	Fault	
	Surge Protection System - Group x	DI	Warning	Provide for x groups (up to 28 devices/group)
	Surge Protection System - Group x	DI	Overload	Provide for x groups (up to 28 devices/group)
	Panel Door	DI	Intrusion	
	Panel Thermostat – High Temp. Alarm	DI	Fault	

3.03 LOCATION IDENTIFIERS

A. Each input and output address shall have a pump station identification number that proceeds address. The station identifier is intended to be utilized by the City's SCADA HMI programmer to distinguish between sites that may have otherwise identical input and output addresses. The identifiers are as follows.

SS12 – River Oaks Stormwater Outfall Pump Station

SS13 – River Oaks Stormwater Influent Pump Station

- END OF SECTION -

TABLE 17920
INPUT/OUTPUT SCHEDULE

TAG	SERVICE DESCRIPTION	FUNCTION	PLC	I/O TYPE	P&ID	NOTES
ANALOG INPUTS						
SS12-LI-0901	SS12 INFLUENT CHANNEL	LIQUID LEVEL	PLC-SS12	AI	1I01	
SS12-LI-1011	SS12 WETWELL	LIQUID LEVEL	PLC-SS12	AI	1I01	
SS13-LI-1011	SS13 WETWELL	LIQUID LEVEL	PLC-SS13	AI	1I02	
DISCRETE INPUTS						
SS12-LAHH-1011	SS12 WETWELL	LEVEL ALARM HIGH-HIGH	PLC-SS12	DI	1I01	
SS12-LALL-1011	SS12 WETWELL	LEVEL ALARM LOW-LOW	PLC-SS12	DI	1I01	HMI Selectable as Shutdown Interlock
SS12-LSHH-1021	SS12 INFLUENT CHANNEL	LEVEL ALARM HIGH-HIGH	PLC-SS12	DI	1I01	
SS12-OA-1001	SS12 STORMWATER PUMP No. 1	PUMP MONITOR ALARM	PLC-SS12	DI	1I01	
SS12-OA-1002	SS12 STORMWATER PUMP No. 2	PUMP MONITOR ALARM	PLC-SS12	DI	1I01	
SS12-OA-1003	SS12 STORMWATER PUMP No. 3	PUMP MONITOR ALARM	PLC-SS12	DI	1I01	
SS12-OA-1004	SS12 STORMWATER PUMP No. 4	PUMP MONITOR ALARM	PLC-SS12	DI	1I01	
SS12-OX-1001	SS12 STORMWATER PUMP No. 1	PUMP MONITOR WARNING	PLC-SS12	DI	1I01	
SS12-OX-1002	SS12 STORMWATER PUMP No. 2	PUMP MONITOR WARNING	PLC-SS12	DI	1I01	
SS12-OX-1003	SS12 STORMWATER PUMP No. 3	PUMP MONITOR WARNING	PLC-SS12	DI	1I01	
SS12-OX-1004	SS12 STORMWATER PUMP No. 4	PUMP MONITOR WARNING	PLC-SS12	DI	1I01	
SS12-YA-0901	SS12 MOTORIZED BARSCREEN No. 1	VFD FAULT	PLC-SS12	DI	1I01	
SS12-YA-0902	SS12 MOTORIZED BARSCREEN No. 2	VFD FAULT	PLC-SS12	DI	1I01	
SS12-YA-1001	SS12 STORMWATER PUMP No. 1	FAIL	PLC-SS12	DI	1I01	
SS12-YA-1002	SS12 STORMWATER PUMP No. 2	FAIL	PLC-SS12	DI	1I01	
SS12-YA-1003	SS12 STORMWATER PUMP No. 3	FAIL	PLC-SS12	DI	1I01	
SS12-YA-1004	SS12 STORMWATER PUMP No. 4	FAIL	PLC-SS12	DI	1I01	
SS12-YL-0901	SS12 MOTORIZED BARSCREEN No. 1	IN REMOTE	PLC-SS12	DI	1I01	
SS12-YL-0902	SS12 MOTORIZED BARSCREEN No. 2	IN REMOTE	PLC-SS12	DI	1I01	
SS12-YL-1001	SS12 STORMWATER PUMP No. 1	IN REMOTE	PLC-SS12	DI	1I01	
SS12-YL-1002	SS12 STORMWATER PUMP No. 2	IN REMOTE	PLC-SS12	DI	1I01	
SS12-YL-1003	SS12 STORMWATER PUMP No. 3	IN REMOTE	PLC-SS12	DI	1I01	

TAG	SERVICE DESCRIPTION	FUNCTION	PLC	I/O TYPE	P&ID	NOTES
SS12-YL-1004	SS12 STORMWATER PUMP No. 4	IN REMOTE	PLC-SS12	DI	1I01	
SS12-YLR-0901	SS12 MOTORIZED BARSCREEN No. 1	RUNNING	PLC-SS12	DI	1I01	
SS12-YLR-0902	SS12 MOTORIZED BARSCREEN No. 2	RUNNING	PLC-SS12	DI	1I01	
SS12-YLR-1001	SS12 STORMWATER PUMP No. 1	RUNNING	PLC-SS12	DI	1I01	
SS12-YLR-1002	SS12 STORMWATER PUMP No. 2	RUNNING	PLC-SS12	DI	1I01	
SS12-YLR-1003	SS12 STORMWATER PUMP No. 3	RUNNING	PLC-SS12	DI	1I01	
SS12-YLR-1004	SS12 STORMWATER PUMP No. 4	RUNNING	PLC-SS12	DI	1I01	
SS12-YSS-0901	SS12 MOTORIZED BARSCREEN No. 1	E-STOP	PLC-SS12	DI	1I01	
SS12-YSS-0902	SS12 MOTORIZED BARSCREEN No. 2	E-STOP	PLC-SS12	DI	1I01	
SS13-LAHH-1011	SS13 WETWELL	LEVEL ALARM HIGH-HIGH	PLC-SS13	DI	1I02	
SS13-LALL-1011	SS13 WETWELL	LEVEL ALARM LOW-LOW	PLC-SS13	DI	1I02	HMI Selectable as Shutdown Interlock
SS13-MAH-1001	SS13 STORMWATER PUMP No. 1	MOTOR SEAL LEAK ALARM	PLC-SS13	DI	1I02	
SS13-MAH-1002	SS13 STORMWATER PUMP No. 2	MOTOR SEAL LEAK ALARM	PLC-SS13	DI	1I02	
SS13-TAH-1001	SS13 STORMWATER PUMP No. 1	MOTOR HIGH TEMP ALARM	PLC-SS13	DI	1I02	
SS13-TAH-1002	SS13 STORMWATER PUMP No. 2	MOTOR HIGH TEMP ALARM	PLC-SS13	DI	1I02	
SS13-YA-1001	SS13 STORMWATER PUMP No. 1	FAIL	PLC-SS13	DI	1I02	
SS13-YA-1002	SS13 STORMWATER PUMP No. 2	FAIL	PLC-SS13	DI	1I02	
SS13-YL-1001	SS13 STORMWATER PUMP No. 1	IN REMOTE	PLC-SS13	DI	1I02	
SS13-YL-1002	SS13 STORMWATER PUMP No. 2	IN REMOTE	PLC-SS13	DI	1I02	
SS13-YLR-1001	SS13 STORMWATER PUMP No. 1	RUNNING	PLC-SS13	DI	1I02	
SS13-YLR-1002	SS13 STORMWATER PUMP No. 2	RUNNING	PLC-SS13	DI	1I02	

DISCRETE OUTPUTS

SS12-YCR-0901	SS12 MOTORIZED BARSCREEN No. 1	START/STOP	PLC-SS12	DO	1I01	
SS12-YCR-0902	SS12 MOTORIZED BARSCREEN No. 2	START/STOP	PLC-SS12	DO	1I01	
SS12-YCR-1001	SS12 STORMWATER PUMP No. 1	START/STOP	PLC-SS12	DO	1I01	
SS12-YCR-1002	SS12 STORMWATER PUMP No. 2	START/STOP	PLC-SS12	DO	1I01	
SS12-YCR-1003	SS12 STORMWATER PUMP No. 3	START/STOP	PLC-SS12	DO	1I01	
SS12-YCR-1004	SS12 STORMWATER PUMP No. 4	START/STOP	PLC-SS12	DO	1I01	
SS13-YCR-1001	SS13 STORMWATER PUMP No. 1	START/STOP	PLC-SS13	DO	1I02	

TAG	SERVICE DESCRIPTION	FUNCTION	PLC	I/O TYPE	P&ID	NOTES
SS13-YCR-1002.	SS13 STORMWATER PUMP No. 2	START/STOP	PLC-SS13	DO	1I02	

TABLE 17921
DIGITAL INPUT/OUTPUT SCHEDULE

TAG	SERVICE DESCRIPTION	FUNCTION	PLC	I/O TYPE	P&ID	NOTES
DIGITAL ANALOG INPUTS (Network Communication: Ethernet/IP, Modbus TCP, etc.)						
LI-1051	STANDBY GENERATOR FUEL TANK	LIQUID LEVEL	PLC-SS12	DAI	1I03	
DIGITAL DISCRETE INPUT (Network Communication: Ethernet/IP, Modbus TCP, etc.)						
YAX-1051	AUTOMATIC TRANSFER SWITCH	MALFUNCTION	PLC-SS12	DDI	1I03	
ZLO-1051	AUTOMATIC TRANSFER SWITCH	OPEN	PLC-SS12	DDI	1I03	
JY-1051	AUTOMATIC TRANSFER SWITCH	POWER STATUS	PLC-SS12	DDI	1I03	
YA-1051	STANDBY GENERATOR	FAULT	PLC-SS12	DDI	1I03	
YX-1051B	STANDBY GENERATOR	LOW COOLANT LEVEL	PLC-SS12	DDI	1I03	
YX-1051A	STANDBY GENERATOR	LOW FUEL MAIN TANK	PLC-SS12	DDI	1I03	
YLR-1051	STANDBY GENERATOR	RUNNING	PLC-SS12	DDI	1I03	
LAH-1051	STANDBY GENERATOR FUEL TANK	LEAK ALARM	PLC-SS12	DDI	1I03	
LAL-1051	STANDBY GENERATOR FUEL TANK	LEVEL ALARM LOW FUEL	PLC-SS12	DDI	1I03	

SECTION 17950

FUNCTIONAL CONTROL DESCRIPTIONS

PART 1 – GENERAL

1.01 THE REQUIREMENT

A. The Contractor shall furnish, test, install and place in satisfactory operation all equipment as herein specified and as shown on the Drawings. The Contractor, through the instrumentation supplier, shall provide all PLC programming, operator interface unit (OIU) configuration, and SCADA (Supervisory Control and Data Acquisition) system human-machine interface (HMI) configuration as herein specified and as shown on the Drawings.

B. Together with the control system input/output schedule, the equipment specifications (including functional descriptions for local equipment control panels), and the Drawings, the functional control descriptions describe the required operation, monitoring, and control of the facilities included in this Contract.

C. All equipment and services required to be installed in equipment local control panels provided to implement the monitoring and control functions described herein or in the process input/output schedules shall be provided by the Contractor through the instrumentation subcontractor or individual equipment suppliers, as appropriate

D. THE FUNCTIONAL DESCRIPTIONS CONTAIN REQUIREMENTS FOR FURNISHING AND INSTALLING LABOR AND MATERIALS THAT MAY NOT APPEAR ELSEWHERE IN THE CONTRACT DOCUMENTS.

1.02 RELATED WORK SPECIFIED ELSEWHERE

A. Section 17910 – Instrument Schedule

B. Section 17920 - Control System Input / Output Schedule

PART 2 – FUNCTIONAL CONTROL DESCRIPTIONS, GENERAL

2.01 DEFINITIONS

A. RUNNING status signals shall be from auxiliary contacts (or data link registers) provided with the motor control equipment (i.e., starter, SSRVS, etc.), which shall close (or change value) when the equipment is running.

B. AUTO status signals shall be defined as HAND-OFF-AUTO switch in the AUTO position where LOCAL hardwired automatic control is provided. Alternatively, the AUTO status may be a virtual input where the process control system control strategy is in the AUTO (versus MANUAL) mode where equipment is remotely controlled by the process control system.

C. FAULT status signals shall be defined as motor overload and/or any other shut down mode such as over torque, over temperature, low oil pressure, high vibration, etc.

D. REMOTE (versus LOCAL) status signal shall be defined as a dry contact (or data link registers) which indicates that equipment control power is energized and the HAND-OFF-REMOTE switch is in the REMOTE position to permit remote control by the process control system.

2.02 CONVENTIONS

A. Indicator lights on all MCC's, control panels, starter enclosures, etc. shall conform to the following color convention:

Condition	Color
Running/On/Open	Red
Stopped/Off/Closed (in local)	Grey
Stopped/Off/Closed (in remote)	Blue
Fault/Alarm	Amber

B. Operator work station HMI graphic display symbols shall conform to the following color convention:

Condition	Color
Graphic background	Light grey
Running/On/Open	Soft white
Stopped/Off/Closed (in local)	Light grey; black outline (shape)
Stopped/Off/Closed (remote manual)	Blue
Stopped/Off/Closed (remote auto)	Medium grey
Fault/Alarm	Amber
Generic Status	Blue

2.03 PROCESS CONTROL

A. Where setpoints, operating limits, and other control settings are provided by the functional descriptions, these settings shall be initial settings only and shall be used for assistance in the initial startup of the plant. All such settings shall be fully adjustable on the HMI and are to be based on actual operating conditions; the instrumentation subcontractor shall make all necessary adjustments to provide smooth, stable operation at no additional cost to the Owner.

B. Provision shall be made in PLC logic to suppress nuisance alarms and control actions by the following means:

C. For alarms and control actions derived from analog input signals, use adjustable time delays and deadbands.

D. For alarms and control actions derived from discrete input signals, use adjustable time delays.

E. Initial settings for time delays shall be 10 seconds (range 0-120 seconds). Initial settings for deadbands shall be 5% of span (range 0-100%).

F. Equipment that is started or stopped manually by the operator shall start or stop immediately, with no time delay.

G. Applications programming shall be provided in the PLC to accomplish all control strategies specified herein. HMI applications programming shall be provided for supervisory monitoring, setpoint adjustment, and manual control. No automatic control strategies shall be executed within HMIs, personal computers, or servers, unless specifically indicated to the contrary. HMI systems shall be provided as shown on the Drawings and as specified herein.

H. Any numerical value referenced in the control strategies described herein such as process control setpoints, sequence times, sequence orders, dead bands, PID tuning parameters, delay timers, variable speed operating range limits, and similar control constants shall be programmed as variables within the PLC and shall be adjustable from the HMI. Values that do not require frequent adjustment shall be accessible from a password secured HMI display. The Systems Integrator and ENGINEER shall review all adjustable parameters during system configuration and startup to determine which values shall be adjustable only via secured HMI graphic displays.

I. All applications programming and default values for all variables shall be saved in the PLC's non-volatile memory such that upon power failure and removal of all PLC backup batteries, the applications programming shall be restored to an operable state.

J. All feedback control shall be by PID control algorithms. Where only proportional control is specified, tuning constants shall be used to eliminate the use of Integral and Derivative functions from the application.

K. All PLC-controlled equipment shall be provided with adjustable (0-60 seconds) start and stop delays in the PLC control logic. Unless otherwise specified, these delays shall be initially set at one second. Unless otherwise specified, all equipment shall automatically restart after a power failure utilizing adjustable start delay timers in MCC's and equipment control panels. Unless otherwise specified, all PLC control strategies shall be based upon automatic restart after a power failure and shall return to a normal control mode upon restoration of power.

L. The PLC shall be capable of receiving initial run-time values for existing and proposed equipment. Initial run-time shall not automatically be assumed to be zero. All runtime calculations shall be performed at the PLC level and maintained in the PLC data table.

M. Equipment failure shall be generated through the PLC for any drive, motor, etc. for which a run command has been issued, but for which the PLC is not receiving a run status signal. The failure to start status registers shall be available in the PLC data table for polling.

N. Individual instrument failure signals shall be generated by the PLC for each instrument that is generating an out-of-range signal (e.g. significantly less than 4 mA or greater than 20 mA)

or that is indicating a malfunction from self-diagnostic features (e.g. poor signal quality, bad data, out-of-calibration). The failure signals shall be individually alarmed in the HMI. In addition, provide a manually toggled “Under Maintenance” bit in the PLC for display on the HMI for each instrument. Suppress alarms and automatic control strategies that require a failed or “Under Maintenance” instrument. The associated controlled equipment shall be placed in to a mode of operation that does not require the instrument (e.g., manual mode).

O. A PLC control program that controls multiple pieces of equipment shall not be prevented from running because not all the equipment is in REMOTE and/or if equipment in REMOTE is not all in the AUTO mode. If equipment within an equipment chain is required to be running for program operation and it is running in LOCAL or MANUAL, then the program shall run and control the other equipment that is in AUTO.

P. All PLC wait states (internal time delays, etc.) after an operator action shall be displayed on the operator workstation.

Q. All analog signals or numerical values for flows, levels, and signals from analytical instruments received by the plant control system shall be recorded by the plant historian software at intervals to be determined during construction.

R. All equipment which has RUN status monitored by the plant control system shall have runtime totalized in the historian software.

2.04 PROCESS CONTROL MODULES

A. The control strategies are written descriptions of the programming required to implement regulatory and sequential control of unit processes or equipment as shown on the Drawings or as specified herein. Control strategies shall fully reside in the memory of the designated PLC unit and shall use modules (reusable code) where shown on the Drawings, where specified, or where any PLC code would otherwise be repeated to a large extent. Modules shall be used to the extent practical for ease of editing PLC code. The code shall incorporate modules available within the applications programming interface (API’s) provided by the PLC manufacturer as well as custom modules created specifically for the unit processes and equipment specified.

B. Certain modules that apply to all inputs and outputs and virtual variables are not shown on the P&ID drawings. Provision shall be made to include the following modules as applicable, even though one or more of the modules may be disabled for each application:

MINT-Motor Interface

PFRST-Power Failure Restart

C. The P&ID's do not show all of the modules required for sequence control. In most cases, the symbol “I” and the associated control strategy number depict discrete logic functions. The required sequence logic features are specified in the control strategy description.

2.05 MODULE DESCRIPTIONS

A. A functional description of each process control module is given in this Section. Module descriptions, equations are provided below to define the functional requirements of each

module. The regulatory and sequence control modules required are shown on the P and ID's and specified in the control strategy schedules.

B. Each module shall be structured to permit the realization of all control strategy linkage requirements. In addition, each module shall be designed so that bumpless, balance free transfers are obtained during operating mode changeover and initialization. Where applicable, user-changeable parameters shall be automatically defaulted to a pre-set value if a specific value is not given during system generation.

C. Modules shall be based upon the process control unit software requirements specified and configured in functional logic blocks or subroutines as necessary to accomplish the functions described herein. Functionally equivalent modules may be used subject to the ENGINEER's favorable review.

D. MINT-Motor Interface - MINT in combination with manual and automatic control strategies, shall provide basic control functions common to each type of controlled equipment. The functions shall include: remote-manual control, software switching between manual and automatic control (when automatic control is available), control/status discrepancy alarms, equipment fault alarms, bumpless transfer from Auto to Manual mode, bumpless transfer from Local to Remote (Manual) mode. The MINT module shall be applied to each type of controlled equipment as follows:

1. Equipment controlled by Start/Stop Commands:

   Inputs: Remote, Running

   Outputs:Start, Stop

2. Equipment controlled by Start/Stop and multiple speeds or directions:

   Inputs:Remote, Running (high speed or forward), Running (low speed or reverse), Running x n (n= number of speeds or directions)

   Outputs:Start (high speed or forward), Start (low speed or reverse), Start x n (n = number of speeds or directions), Stop

3. Equipment controlled by start/stop and variable speed:

   Inputs:Remote, Speed, Running

   Outputs:Speed Command, Start, Stop

4. Motorized Actuators controlled by Open/Close Commands

   Inputs:Remote, Opened, Closed, Opening, Closing

   Outputs:Open, Close

5. Motorized Actuators controlled by Position Commands

   Inputs:Remote, Position

Outputs:Position Command

Software and physical signaling shall be maintained or momentary contacts as required by the software or electrical elementary diagrams of the controlled equipment.

Remote control in Manual or Automatic modes shall require that the equipment control selector switch (or software switch) be in the Remote position. When not in Remote, MINT shall continue to monitor the status of the equipment such that bumpless transfer to Remote-Manual mode shall occur upon return of the equipment to Remote control. When switching into Remote control, equipment shall be placed in Manual mode and the commanded state shall match the current state of the equipment.

The MINT shall latch a single Common Fault bit when any one or more of the following conditions occurs:

6. Control Discrepancy Fault

   a. When the remote-control command changes, the appropriate output shall be switched, and a delay timer initiated. During the countdown to zero, the commanded state shall be compared with the status. When the two agree, the output shall be latched, and the timer shall be reset and stopped.

   b. If the timer expires before the requested state is achieved, the equipment shall register a discrepancy alarm and the output command shall be removed by the associated control strategy. When the operator resets the alarm the equipment shall remain in its current state until commanded to change by the operator or an automatic control strategy.

7. Equipment Fault

   Equipment fault signals are those signals originating from the equipment or their associated control panel(s) that indicates the equipment must immediately stop. It shall not include warnings or service requirement indications. When an equipment fault signal is received, MINT shall start a timer. When the timer expires the equipment shall register a fault alarm and the output command shall be removed by the associated control strategy. When the operator resets the alarm the equipment shall remain in its current state until commanded to change by manual control or an automatic control strategy.

8. Loss of Communications

   The MINT block shall monitor communication status between the PLC and the equipment. The communications status shall be generated by each PLC that communicates over a digital communications link to other PLC's, remote I/O racks, or equipment. The PLC shall employ a watchdog timer or other method that provide positive indication of communications. Methods that rely on the fluctuation of process data are not acceptable. The loss of communications alarm shall be generated after a time delay.

9. The MINT shall also calculate the following equipment operation statistics and maintain PLC data table registers for scanning:

a. Accumulated Run-time (current day)

b. Accumulated Run-time (prior day)

c. Accumulated Run-time (current month)

d. Accumulated Run-time (prior month)

e. Accumulated Run-time (since last reset)

f. Number of Starts (current day)

g. Number of Starts (prior day)

h. Number of Starts (current month)

i. Number of Starts (prior month)

j. Number of Starts (since last reset)

E. PFRST-Power Failure Restart – All equipment controlled by the control system is to return to its pre-power failure state following the return of power. When power returns after a power failure (whether on emergency power or utility power), equipment that was running is to restart according to preset hardware time delay relays (for equipment with high electrical loads) or immediately (equipment with low electrical loads). Motorized actuators are to remain in their last position unless specified otherwise with functional control descriptions. It is imperative that the control system functions with all controlled equipment to smoothly and safely return the system to proper operations without operator intervention. In order to do so, the PFRST function will perform the following:

1. Monitor “Power Failure” for each piece of controlled equipment. Use individual power failure signals for each piece of equipment when available. If individual power failure signals are not available, use a general AC power failure signal.

2. When a power failure is detected, immediately alarm the condition on the HMI, freeze all control outputs in its pre-power failure state, and suppress any equipment alarms that are caused by the power failure. Immediately start a timer (Maximum Outage Timer). During this time the control output freeze and alarm suppression shall remain in effect.

3. When power returns, continue the control output freeze and alarm suppression for a preset time (Maximum Restart Timer). This will allow all hardwired time-delay relays to time out and transient equipment faults to self-clear.

4. After the Maximum Restart Timer expires, release the freeze on control outputs and alarm suppression. All discrete and analog control functions are to continue at the point of execution before the power failure. All discrete equipment that did not return to its original state will have its outputs turned off and a deviation alarm will be issued. This mode of execution will occur unless the Maximum Outage Timer has timed out.

5. If the Maximum Outage Timer times out, the equipment is to be returned to the manual control mode and a stop command issued. Motorized actuators are to be placed in manual mode and remain in their current position.

PART 3 – FUNCTIONAL CONTROL DESCRIPTIONS

TABLE OF CONTENTS:

3.01 RIVER OAKS STORMWATER OUTFALL PUMP STATION…….…11

3.02 RIVER OAKS STORMWATER INFLUENT PUMP STATION…….……...…….…..14

3.03 RIVER OAKS STANDBY GENERATOR… ……...……....17

3.04 SCADA NETWORK COMMUNICATIONS ..……19

3.01 RIVER OAKS STORMWATER OUTFALL PUMP STATION (SS-12)

Drawing 1I-01

A. PROCESS OVERVIEW

1. The River Oaks Stormwater Outfall Pump Station shall convey stormwater received in the station wetwell to the New River waterway on the Northwest side of the property. The pump station shall be equipped with four (4) submersible vertical column pumps powered by SSRVSs (solid state reduced voltage starters) and controlled by an LCP (local control panel), LCP-SS12, equipped with a programmable logic controller, PLC-SS12.

2. PLC-SS12 shall monitor wetwell level via a radar level indicating transmitter, LIT-1011, and automatically start and stop pumps based on set-point adjustable wetwell elevations defined herein.

3. The LCP shall be equipped with an OIU (operator interface unit) for pump station status monitoring, control and set-point adjustment.

4. A hardwired, relay logic-based backup float switch system, independent of PLC-SS12 and housed in LCP-SS12, shall maintain wetwell level should PLC-SS12 or LIT-1011 fail.

B. CONTROL OPERATION

1. Each stormwater pump shall be controlled either locally from the SSRVS or remotely from PLC-SS12, as follows:

   a. SSRVS Local Mode- When the SSRVS “Hand-Off-Auto” mode selection switch is set to “Local” the pump shall be started and stopped by pressing the “Start” and “Stop” pushbuttons on the front of the SSRVS enclosure.

b. SSRVS Auto Mode – When the SSRVS “Hand-Off-Auto” mode selection switch is set to “Auto” the pump shall be started and stopped by PLC-SS12.

2. A “Local/Remote” selector switch on the LCP shall allow the operator to select “Local” or “Remote” control mode for the pump station. In Local mode, remote control of the pumps from the SCADA system shall be disabled. In Remote mode, there shall be two modes of operation: Remote Manual and Remote Auto, which shall operate as follows:

   a. Remote Manual (SCADA HMI) - When the selected pump is set to “Manual” mode from the SCADA HMI (Remote Manual) the operator shall be able to remotely start/stop individual pumps from the SCADA HMI.

   b. Remote Auto (SCADA HMI) When the selected transfer pump is set to “Automatic” mode from the SCADA HMI (Remote Auto) the pump stall be started/stopped automatically by PLC-SS12.

3. When LCP-SS12 is in “Local Auto” or “Remote Auto” mode, up to four pumps shall be operated automatically by PLC-SS12 to lower the liquid level in the wetwell. The start and stop delay timers and pump start and stop level set-points shall be adjustable locally from the LCP OIU and remotely from the SCADA HMI. The pump start level setpoints shall be initially set to the values shown in Table 3.01A, below.

Table 3.01A – Pump Start Level Set-Points

Control Action	Level Set-point	Comments
Start Small Lead Pump	0.5 FT	after 3 second delay
Start Small Lag Pump	1.0 FT	after 3 second delay
Start Large Lead Pump	1.5 FT	after 3 second delay
Start Large Lag Pump	2.0 FT	after 3 second delay
Start All Pumps (High-High Level Float) Level Alrm	2.5 FT	after 3 second delay

4. As the level in the wetwell decreases from high level, PLC-SS12 shall shed pumps as shown in Table 3.01B, below.

Table 3.01B – Pump Stop Level Set-Points

Control Action	Level Set-point	Comments
Stop Small Lead Pump	-2.0 FT	after 3 second delay
Stop Small Lag Pump	-2.0 FT	after 3 second delay
Stop Large Lead Pump	-4.0 FT	after 3 second delay
Stop Large Lag Pump	-4.0 FT	after 3 second delay
Stop All Pumps (Low-Low Level Float)	-5.0 FT	after 3 second delay

C. LEAD LAG OPERATION

1. Pumps shall be assigned to a lead lag group based on pump capacity, with small and large pump groups having a dedicated lead/lag assignment. P-1001 and P-1002 shall be grouped together under “Small Pump Lead/Lag Selection”. P-1003 and P-1004 shall be grouped together under “Large Pump Lead/Lag Selection”.

2. Manual Mode: The Lead/Lag pump selection shall maintain the operating pump’s assignment without rotating the sequence entered by the operator at the OIU or SCADA HMI. Lead/Lag pump selection shall not allow a pump to be assigned more than one role and the PLC shall alert the operator if such selection is made.

3. Automatic Mode: The Lead/Lag pump selection sequence shall be made based upon the accumulated pump runtime. The pump with the least amount of runtime shall be assigned as Lead Pump and pump with the most run time as the Standby Pump. If the process has not allowed the Lead pump to stop, the rotation time shall force the rotation. The rotation time shall be operator adjustable from the OIU and SCADA HMI.

4. Lead/Lag pump operation shall be selected by the operator to control the sequencing of the pumps as follows:

Table 3.02C – Lead Lag Pump Selection

Small Pump Lead/Lag Pump Selection		
Auto/Manual Selection	☐ Auto	☐ Manual
Auto Time Rotation	40.0 Hours	
Pump P-1001	☐ Lead	☐ Lag
Pump P-1002	☐ Lead	☐ Lag
Large Pump Lead/Lag Pump Selection		
Auto/Manual Selection	☐ Auto	☐ Manual
Auto Time Rotation	40.0 Hours	
Pump P-1003	☐ Lead	☐ Lag
Pump P-1004	☐ Lead	☐ Lag

D. ALARMS

1. Utility Power Alarm – When utility power is lost an alarm shall be displayed on the local OIU and the City's SCADA HMI screen.

2. Utility Power and Generator Fail Critical Alarm – Should utility power be lost, and the standby generator fail to start, an immediate critical alarm shall be displayed on the local OIU and City's SCADA HMI screen.

3. Pump Station High-High Level Alarm – When the High-High Level Alarm float switch, LSHH-1011, is activated an alarm shall be displayed on the local OIU and the City's SCADA HM screen.

4. Pump Station Low-Low Level Alarm – When the High-High Level Alarm float switch, LSHH-1011, is activated an alarm shall be displayed on the local OIU and the City's SCADA HM screen. The Low-Low Level alarm shall also be configured as a selectable shutdown interlock from the HMI that will disable the pumps, in Auto mode, when the alarm is active for more than an adjustable time delay, initially set at 30 seconds.

E. ADDITIONAL REQUIREMENTS

1. All set-points shall be operator adjustable from the OIU and SCADA HMI, and shall be password protected.

3.02 RIVER OAKS STORMWATER INFLUENT PUMP STATION (SS-13)

Drawing 1I-02

A. PROCESS OVERVIEW

1. The River Oaks Stormwater Influent Pump Station shall convey stormwater received in the station wetwell to the New River on the Northwest side of the property. The pump station shall be equipped with two (2) submersible vertical column pumps. Pumps shall be controlled by an LCP (local control panel), LCP-SS13, equipped with SSRVSs (solid state reduced voltage starters) and a programmable logic controller, PLC-SS13. Both pumps shall operate when the station is near maximum capacity. The pumps shall be operated in a Lead/Lag configuration, as described in Section 2.03-S herein. When the pump station is near maximum capacity both pumps shall operate.

2. PLC-SS13 shall monitor wetwell level via a radar level indicating transmitter, LIT-1011, and automatically start and stop pumps based on set-point adjustable wetwell elevations defined herein.

3. A hardwired, relay logic based backup float switch system, independent of PLC-SS13 and housed in LCP-SS13, shall maintain wetwell level should PLC-SS13 or LIT-1011 fail.

B. CONTROL OPERATION

1. Each stormwater pump shall be controlled either locally from the SSRVS or remotely from PLC-SS13, as follows:

a. SSRVS Local Mode- When the SSRVS “Hand-Off-Auto” mode selection switch is set to “Local” the pump shall be started and stopped by pressing the “Start” and “Stop” pushbuttons on the front of the SSRVS enclosure.

b. SSRVS Auto Mode – When the SSRVS “Hand-Off-Auto” mode selection switch is set to “Auto” the pump shall be started and stopped by PLC-SS13.

2. A “Local/Remote” selector switch on the LCP shall allow the operator to select “Local” or “Remote” control mode for the pump station. In Local mode, remote control of the pumps from the SCADA system shall be disabled. In Remote mode, there shall be two modes of operation: Remote Manual and Remote Auto, which shall operate as follows:

a. Remote Manual (SCADA HMI) - When the selected pump is set to “Manual” mode from the SCADA HMI (Remote Manual) the operator shall be able to remotely start/stop individual pumps from the SCADA HMI.

b. Remote Auto (SCADA HMI) When the selected transfer pump is set to “Automatic” mode from the SCADA HMI (Remote Auto) the pump stall be started/stopped automatically by PLC-SS13.

3. When LCP-SS13 is in “Local Auto” or “Remote Auto” mode, up to two pumps shall be operated automatically by PLC-SS13 to lower the liquid level in the wetwell. The start and stop delay timers, and the pump start and stop level set-points shall be adjustable locally from the LCP OIU and remotely from the SCADA HMI. The pump start level setpoints shall be initially set to the values shown in Table 3.02A.

Table 3.02A – Pump Start Level Set-Points

Control Action	Level Set-point	Comments
Start Lead Pump	1.0 FT.	after 3 second delay
Start Lag Pump	1.5 FT.	after 3 second delay
Start All Pumps (High-High Level Float)	2.5 FT.	after 3 second delay

4. As the level in the wetwell decreases from high level, PLC-SS13 shall shed pumps as the as shown in Table 3.02B, below.

Table 3.02B – Pump Stop Level Set-Points

Control Action	Level Set-point	Comments
Stop Lead Pump	-4.0 FT.	after 3 second delay
Stop Lag Pump	-4.0 FT.	after 3 second delay
Stop All Pumps (Low-Low Level Float)	-5.0 FT.	after 3 second delay

C. LEAD LAG OPERATION

1. Manual Mode: The Lead/Lag pump selection shall maintain the operating pump's assignment without rotating the sequence entered by the operator at the OIU or SCADA HMI. Lead/Lag pump selection shall not allow a pump to be assigned more than one role and the PLC shall alert the operator if such selection is made.

2. Automatic Mode: The Lead/Lag pump selection sequence shall be made based upon the accumulated pump runtime. The pump with the least amount of runtime shall be assigned as Lead Pump and pump with the most run time as the Standby Pump. If the process has not allowed the Lead pump to stop, the rotation time shall force the rotation. The rotation time shall be operator adjustable from the OIU and SCADA HMI.

Lead/Lag pump operation shall be selected by the operator to control the sequencing of the pumps as shown in Table 3.02C.

Table 3.02C – Lead Lag Pump Selection

Lead/Lag Pump Selection		
Auto/Manual Selection	☐ Auto	☐ Manual
Auto Time Rotation	40.0 Hours	
Pump P-1001	☐ Lead	☐ Lag
Pump P-1002	☐ Lead	☐ Lag

D. ALARMS

1. Loss of Utility Power Alarm – When utility power is lost an alarm shall be displayed on the local OIU and the City's SCADA HMI screen.

2. Pump Station High-High Level Alarm – When the High-High Level Alarm float switch, LSHH-1011, is activated an alarm shall be displayed on the local OIU and the City's SCADA HM screen.

3. Pump Station Low-Low Level Alarm – When the High-High Level Alarm float switch, LSHH-1011, is activated an alarm shall be displayed on the local OIU and the City's SCADA HM screen. The Low-Low Level alarm shall also be configured as a selectable shutdown interlock from the HMI that will disable the pumps, in Auto mode, when the alarm is active for more than an adjustable time delay, initially set at 30 seconds.

E. ADDITIONAL REQUIREMENTS

1. All set-points shall be operator adjustable from the OIU and SCADA HMI, and shall be password protected.

3.03 STANDBY GENERATOR (RIVER OAKS STORMWATER OUTFALL PUMP STATION)

DRAWING: 1I-03

A. OVERVIEW

1. The River Oaks Stormwater Outfall Pump Station standby generator system shall consist of a natural gas standby generator, GEN-1051, housed in the generator enclosure adjacent to the pump station building. The generator shall be equipped with a vendor furnished generator control panel, LCP-1051 which shall monitor and control all generator functions and monitor the automatic transfer switch, ATS-1051. LCP-1051 shall be equipped with a PLC and shall provide generator status indication to the City's SCADA system over an Modbus TCP (Ethernet) data link.

B. STATUS INDICATION

1. Refer to Instrumentation Drawing 1I-03 and Table 17921 for a list of the status and alarm signals required.

3.04 SCADA NETWORK COMMUNICATIONS

A. OVERVIEW

1. Pump station LCPs shall be equipped with a cellular router that shall utilize an M2M (Machine-to-Machine) wireless internet (Ethernet/IP) connection for remote pump station control/monitoring from the City's SCADA system. SIM cards shall be provided by the City and the City shall maintain the wireless internet service plan for each SIM card.

2. The LCP OIU shall be configured to display the status of the PLCs internet connection to the City SCADA system. The main OIU screen shall indicate when internet connectivity to SCADA is lost "offline" or "online".

3. The instrumentation and controls subcontractor shall coordinate with the City to ensure that all data transmitted over the cellular router does not exceed the City's monthly wireless internet data plan(s). The PLC shall manage all stormwater pump monitoring and control data that is transmitted to the SCADA system.

4. For cellular router hardware requirements refer to Section 17135. For Factory Acceptance Testing requirements refer to Section 17071.

-END OF SECTION-

APPENDIX

RADISE International, L.C.

Geotechnical Engineering Services Report

City of Fort Lauderdale
Stormwater Master Plan Modeling and Design Implementation
Broward County, Florida

Submission Date: August 1, 2018

Prepared by:
RADISE International, L.C.
4152 W. Blue Heron Boulevard, Suite 1114
Riviera Beach, Florida 33404

RADISE Project No: 170901

August 1, 2018

Hazen and Sawyer
4000 Hollywood Blvd., Suite 750N
Hollywood, Florida 33201

Attn: Mr. Robert B. Taylor, Jr., P.E.
Office: (954) 987- 0066
Cell: (772) 595- 2535
Email: rbtaylor@hazenandsawyer.com

RE: Geotechnical Engineering Services Report
City of Fort Lauderdale
Stormwater Master Plan Modeling and Design Implementation
Broward County, Florida
RADISE Project No: 170901

Dear Mr. Taylor,

RADISE International, LC (RADISE) is pleased to submit this *Geotechnical Engineering Services Report* for the above-referenced project. The purpose of this report is to provide geotechnical information and recommendations to aid in the design and construction of the project. This report describes the field exploration and laboratory testing performed, presents the data obtained, and provides our recommendations regarding geotechnical aspects of the of the proposed project. The study was performed in general accordance with our agreement executed on August 30, 2017 and amendment executed on June 19, 2018.

We appreciate the opportunity to work with Hazen and Sawyer on this project, and trust that the information presented is clear. Should you have any questions regarding this report, or if we can be of additional assistance as this project develops, please contact us at (561) 841-0103.

RADISE International, LC
Florida Certificate of Authorization No.8901

Akash Bissoon, P.E.
Project Engineer
FL Registration No. 74582

ANDREW NIXON LICENSE No. 71458 STATE OF FLORIDA PROFESSIONAL ENGINEER

This document has been digitally signed and sealed by

On the date above.

Printed copies of this document are not considered signed and sealed and the signature must be verified on any electronic copies.

Andrew Nixon, P.E.
Senior Project Engineer/Operations Manager
FL Registration No. 71458

TABLE OF CONTENTS

1.0 INTRODUCTION 1

2.0 PROJECT DESCRIPTION 1

3.0 PURPOSE AND SCOPE OF WORK 2

4.0 FIELD EXPLORATION 3

4.1 CORING 3
4.2 SOIL BORINGS 4
4.3 GROUNDWATER LEVEL MEASUREMENTS 9

5.0 LABORATORY TESTING 9

5.1 GENERAL 9
5.2 LABORATORY TEST RESULTS 10

6.0 SURFACE AND SUBSURFACE EXPLORATION 10

6.1 STRATIGRAPHY 10
6.2 GROUNDWATER LEVELS 12

7.0 ENGINEERING CONSIDERATIONS AND RECOMMENDATIONS 13

7.1 SEAWALL STRUCTURE DESIGN RECOMMENDATIONS 13
7.1.1 SOIL DESIGN PARAMETERS FOR SEAWALLS 14
7.2 FOUNDATION RECOMMENDATIONS FOR PUMP STATIONS 22
7.2.1 RECOMMENDED SOIL PARAMETERS FOR PUMP STATION DESIGN 23
7.2.2 AUGER CAST PILE RECOMMENDATIONS FOR LIFT STATION DESIGN 27
7.3 FOUNDATION RECOMMENDATIONS FOR ELECTRICAL EQUIPMENT BUILDINGS 28
7.3.1 RIVER OAKS OUTFALL ELECTRICAL EQUIPMENT BUILDING 30
7.4 PAVEMENT DESIGN CONSIDERATIONS 30
7.4.1 PERVIOUS PAVEMENT DESIGN CONSIDERATIONS 32
7.5 CLEARING AND GRUBBING 33
7.6 UNDERGROUND UTILITIES 33
7.7 EXCAVATIONS 34
7.8 DEWATERING 34
7.9 PIPE BEDDING 34
7.10 TRENCH BACKFILL AND COMPACTION 35
7.11 SITE PREPARATION 35
7.12 SELECT FILL COMPOSITION, PLACEMENT AND COMPACTION 36
7.13 OBSERVATION AND TESTING 37

8.0 EXISTING UTILITIES 37

9.0 PROTECTION OF EXISTING STRUCTURES 37

10.0 LIMITATIONS 38

ATTACHMENTS

Sheet 1 – Vicinity Map
Sheets 2A through 2R – Boring Location Plan
Sheets 3A and 3B – Durrs Subsurface Profiles
Sheets 4A and 4B – Dorsey Riverbend Subsurface Profiles
Sheets 5A through 5E – Edgewood Subsurface Profiles

TABLE OF CONTENTS

Sheets 6A through 6C – Progresso Subsurface Profiles
Sheets 7A through 7E – River Oaks Subsurface Profiles
Sheets 8A through 8C – Southeast Isles Subsurface Profiles
Sheets 9A through 9N – Seawalls Subsurface Profiles
Sheets 10A through 10D – Victoria Park Subsurface Profiles

APPENDIX A
Table A-1 – Laboratory Test Results Summary
Grain Size Distribution

APPENDIX B
Preliminary Design Geotechnical Services Report

1.0 INTRODUCTION

RADISE understands that the City of Fort Lauderdale is performing a study for seawall replacement designs, stormwater master plan modeling, and design implementation within the City of Fort Lauderdale. To aid in the evaluation and design of the project, RADISE was requested to provide soil investigations and evaluation services that included drilling of exploratory borings to determine the subsurface stratigraphy, groundwater levels and physical properties of the soils underlying the site.

The information presented in this report is based upon our interpretation of the subsurface information revealed by the test borings. The report does not reflect variations in subsurface conditions that may exist between or beyond these borings. Variations in soil and groundwater conditions should be expected, the nature and extent of which might not become evident until construction is undertaken. If variations are encountered, and/or the scope of the project altered, we should be consulted for additional recommendations.

2.0 PROJECT DESCRIPTION

The project is located within the City of Fort Lauderdale, Florida and includes seawall and stormwater improvements within seven (7) neighborhoods located east of I-95 and between the Port Everglades Expressway and Sunrise Boulevard. The neighborhoods include Durrs, Dorsey Riverbend, Edgewood, Progresso Village, River Oaks, Southeast Isles and Victoria Park. The approximate location of the overall project and the neighborhoods are shown on the attached *Vicinity Map*, Sheet 1.

It is our understanding that improvements are proposed to fourteen (14) seawall segments at the site. Specific design information is not available at this time; however, we presume that a steel sheet pile cantilever wall with a concrete cap and suitable lateral support system (tie-backs, battered piles, etc.) will be utilized.

In addition, it is our understanding that the proposed stormwater improvements will provide improved flood protection and enhanced water quality treatment by using Best Management Practices (BMPs). The proposed stormwater collection and conveyance systems will include, but are not limited to:

- Swales
- Inlets and catch basins
- Exfiltration trenches
- Dry and wet retention systems (basins)
- Backflow prevention valves
- Underdrain systems
- Stormwater pump stations
- Electrical equipment buildings
- Outfalls
- Control structures
- Drainage wells
- Green infrastructure such as bio-swales and precast porous pavement

3.0 PURPOSE AND SCOPE OF WORK

The purpose of this study was to perform a limited exploration of the subsurface conditions within the project proposed areas, to aid in the planning and design of the overall neighborhood site drainage infrastructure and seawalls.

More specifically, the purpose of the work included the following:

- Development of the anticipated soil profiles and the subsurface conditions within the depth of influence at the seawall structure locations and anticipated stormwater management infrastructure improvements.

- Identification of critical geotechnical design or construction considerations based on the soil and groundwater conditions encountered in the borings.

RADISE performed the following services in accordance with the proposed scope of work:

1. Reviewed and incorporated our recommendations provided in our Geotechnical Services Report, dated January 31, 2018, which was prepared for the preliminary design of the project. The preliminary design Geotechnical Services Report is included in Appendix B of this report.

2. Visited the sites to field mark (paint or/and stake) the planned soil boring test locations and observe existing site conditions.

3. Contacted Sunshine 811 to request the field location and clearance of underground utilities in the areas of the proposed borings, as per Florida Statutes.

4. Set up Maintenance of Traffic (MOT) safety controls prior to and during the field drilling operations.

5. Mobilized drilling equipment to the site to perform:

    - Fifty (50) Standard Penetration Test (SPT) soil borings to depths of fifteen (15) feet and thirteen (13) SPT soil borings to depths of fifty (50) feet below the existing ground surface for the proposed stormwater improvements.

    - Twenty-six (26) SPT borings to depths of fifty (50) feet below the existing ground surface for the proposed seawall improvements.

    - Asphalt pavement cores at sixty-eight (68) of the SPT boring locations.

    Samples of the subsurface soils encountered in the SPT borings were obtained and placed in labeled air-tight containers. The depth to the groundwater level was measured and recorded for each of the borings. Following completion of the groundwater measurements,

the boreholes were backfilled with neat cement grout.

6. Visually classified the SPT soil samples retrieved from the soil borings in accordance with the Unified Soil Classification System (USCS) using the Visual-Manual Procedure in general accordance with the American Society of Testing and Materials (ASTM) test method D 2488, *Description and Identification of Soils*.

7. Reviewed, assigned and performed a limited laboratory testing program for soil index property determinations on selected SPT samples to aid in the classification process in general accordance with the ASTM test method D 2487, *Classification of Soils for Engineering Purposes*.

8. Prepared this Geotechnical Engineering Services Report to summarize the results of the field exploration and laboratory testing, and to present our findings, evaluations and design recommendations.

4.0 FIELD EXPLORATION

During this work phase, MOT was used to protect our field personnel, equipment, and the general public. The MOT was designed and set up in accordance with the FDOT Design Standards.

4.1 CORING

The field exploration program to evaluate the existing asphalt pavement section consisted of a total of sixty-eight (68) Pavement Cores at respective SPT borings locations. The approximate coring and boring locations are shown on the attached *Boring Location Plans*, Sheets 2A through 2R.

Pavement Core samples were obtained at sixty-eight (68) locations using a portable electric stand-up core drill with a 6-inch diameter diamond tipped core drill bit. Upon removal of the asphalt core, a hand-held power auger and a hand operated bucket-type auger were used to loosen the base course material and to clean out the borehole. Subsequent down-hole field measurements were made using a surveyor's tape to document the approximate thickness and composition of the encountered pavement base course materials. Representative samples of the base course, obtained from the hand bucket-type auger, were placed in moisture proof bags and transported to our laboratory. The samples were then examined by a geotechnical engineer in the lab to confirm the field classifications. Tables 1 and 2 presented below in Section 4.2 provide information on the boring locations along with a summary of the measured asphalt section thickness and base thickness at the boring locations. Latitude and Longitude coordinates of the boring locations were obtained by the field crew using hand-held GPS equipment.

A review of the asphalt and base rock thicknesses data tabulated in Tables 1 and 2 indicates that there are a number of apparent cores with either thin or thick pavement layers. Discussion of the nature and locations of deficient cores along with comparisons to more current day pavement design sections is included in Section 7.4 - Pavement Design Considerations of this report.

4.2 SOIL BORINGS

The field exploration program to evaluate the existing subsurface conditions consisted of drilling eighty-nine (89) SPT borings. Fifty (50) SPT soil borings were drilled to depths of fifteen (15) feet and thirteen (13) SPT soil borings were drilled to depths of fifty (50) feet below the existing ground surface for the proposed stormwater improvements. Twenty-six (26) SPT borings were drilled to depths of fifty (50) feet below the existing ground surface for the proposed seawall improvements. A summary of the boring information is included in Tables 1 and 2 presented below. The approximate locations of the SPT borings are depicted on the attached *Boring Location Plans*, Sheets 2A through 2R. Latitude and Longitude coordinates of the test locations were obtained by the field crew using hand-held GPS equipment and are listed on the attached Subsurface Profiles, Sheets 3A through 10D.

The SPT borings were performed in general accordance with ASTM D 1586, "Standard Test Method for the Standard Penetration Test and Split-Barrel Sampling". Upon retrieval, the split-spoon, soil samples were visually classified and placed in moisture proof containers for transportation to our laboratory. Each borehole was backfilled with neat cement grout to the ground surface after the completion of drilling, sampling and monitoring operations.

Table 1 – Boring Location Information for Seawall Improvements

Seawall	Boring No.	Boring Location Remarks	Asphalt Thickness (inches)	Base Course Thickness* (inches)
Seawall 9	S-28	Inside Victoria Park. At the intersection of Broward Boulevard and North Victoria Park Road.	-	-
Seawall 10	S-29	At the intersection of SE 23rd Avenue and Del Mar Place. Approximately 450 feet north of E Las Olas Boulevard.	3.75	4.5
Seawall 12	S-15	South side of E Las Olas Boulevard, between Lido Drive and San Marco Drive.	-	-
Seawall 13	S-14	South side of E Las Olas Boulevard, between San Marco Drive and Coral Way.	-	-
Seawall 14	S-13	South side of E Las Olas Boulevard, between Coral Way and Royal Plaza Drive.	-	-
Seawall 15	S-9	On the east side of Isle of Palms Drive. Approximately 800 feet south of E Las Olas Boulevard.	4.5	6.0
	S-10	On the east side of Isle of Palms Drive. Approximately 570 feet south of E Las Olas Boulevard.	5.25	4.0
	S-11	On the east side of Isle of Palms Drive. Approximately 350 feet south of E Las Olas Boulevard.	5.75	6.0
	S-12	On the east side of Isle of Palms Drive. Approximately 120 feet south of E Las Olas Boulevard.	6.25	6.0

Seawall	Boring No.	Boring Location Remarks	Asphalt Thickness (inches)	Base Course Thickness* (inches)
Seawall 17	S-8	On the south side of SE 5th Street. Approximately 75 feet west of the intersection of Riviera Isle Drive and SE 5th Street.	6.5	6.0
Seawall 29	S-17	On the east side of Cordova Road. Between SE 7th Street and SE 8th Street. Approximately 230 feet south of the intersection of Cordova Road and SE 7th Street.	12.0	6.0
	S-18	On the east side of Cordova Road. Between SE 8th Street and SE 9th Street. Approximately 175 feet south of the intersection of Cordova Road and SE 8th Street.	9.5	5.0
	S-19	On the east side of Cordova Road. Between SE 8th Street and SE 9th Street. Approximately 400 feet south of the intersection of Cordova Road and SE 8th Street.	8.25	6.0
	S-20	On the east side of Cordova Road. Between SE 8th Street and SE 9th Street. Approximately 175 feet south of the intersection of Cordova Road and SE 8th Street.	9.0	5.0
	S-21	On the east side of Cordova Road. Between SE 8th Street and SE 9th Street. Approximately 220 feet south of the intersection of Cordova Road and SE 9th Street.	5.75	6.0
	S-22	On the east side of Cordova Road. Between SE 10th Street and SE 11th Street. Approximately 215 feet south of the intersection of Cordova Road and SE 10th Street.	5.0	5.0
	S-23	On the east side of Cordova Road. Between SE 11th Street and SE 12th Street. Approximately 160 feet south of the intersection of Cordova Road and SE 11th Street.	5.0	8.0
Seawall 30	S-26	On the south side of SE 10th Street. Approximately 2,000 feet east of the intersection of Cordova Road and SE 10th Street.	5.25	6.0
	S-27	On the south side of SE 10th Street. Approximately 2,250 feet east of the intersection of Cordova Road and SE 10th Street.	3.75	5.0
Seawall 32	S-16	On Mola Avenue. Approximately 775 feet south of the intersection of SE 17th Way and Mola Avenue.	-	-
Seawall 34	S-30	Located on the north side of Barcelona Drive. At the northeast quadrant of Barcelona Drive and NE 26th Terrace.	3.5	6.0
Seawall 35	S-24	Located on the south side of SE 8th Street. Approximately 1,000 feet east of Cordova Road.	4.5	6.0
	S-25	Located on the south side of SE 8th Street. Approximately 1,335 feet east of Cordova Road.	4.5	6.0

Seawall	Boring No.	Boring Location Remarks	Asphalt Thickness (inches)	Base Course Thickness* (inches)
TBD1	S-31	Located on the west side of Hendricks isle. Approximately 3200 feet north of E Las Olas Boulevard.	-	-
	S-32	Located on the west side of Hendricks isle. Approximately 3350 feet north of E Las Olas Boulevard.	-	-
TBD2	S-33	Located on the east side at the end of Hendricks isle.	-	-

*Base course thicknesses were measured in the field to the nearest half inch.

Table 2 – Boring Location Information for Stormwater Improvements

Neighborhood	Boring No.	Boring Location Remarks	Asphalt Thickness (inches)	Base Course Thickness* (inches)
Durrs	D-1	Intersection of NW 9th Street and NW 17th Avenue.	4.0	5.0
	D-2	Intersection of NW 16th Avenue and NW 8th Street.	7.0	3.0
	D-3	On NW 19th Avenue. Approximately 60 feet south of the intersection of NW 19th Avenue and NW 7th Street.	4.0	8.0
	D-4	Intersection of NW 8th Street and NW 13th Terrace.	1.3	3.0
	D-5	On the west side of NW 14th Way. Approximately 170 feet north of the intersection of NW 14th Way and NW 6th Street.	3.2	3.0
Dorsey Riverbend	DR-1	Approximately 160 feet north of NW 5th Street, between NW 15th Terrace and NW 15th Avenue.	-	-
	DR-2	On the east side of NW 15th Avenue. Approximately 200 feet north of the intersection of NW 15th Street and NW 15th Avenue.	-	-
	DR-3	Intersection of NW 4th Street and NW 15th Avenue.	5.0	6.0
	DR-4	Approximately 75 feet north of the intersection of NW 4th Street and NW 18th Avenue.	5.2	1.0
	DR-5	On the west side of NW 18th Avenue, approximately 130 feet south of the intersection of NW 6th Street and NW 18th Avenue.	1.0	2.0
Edgewood	E-1	Intersection of SW 15th Avenue and SW 32nd Court.	1.2	4.0
	E-2	Intersection of SW 15th Avenue and SW 31st Street.	3.7	4.0
	E-3	Intersection of SW 15th Avenue and SW 29th Street.	2.2	4.0

Neighborhood	Boring No.	Boring Location Remarks	Asphalt Thickness (inches)	Base Course Thickness* (inches)
Edgewood	E-4	On SW 30th Street. Approximately 400 feet east of the intersection of SW 15th Avenue and SW 30th Street.	3.2	4.0
	E-5	On SW 32nd Street. Approximately 400 feet east of the intersection of SW 15th Avenue and SW 32nd Street.	2.0	6.0
	E-6	Intersection of SW 14th Avenue and SW 28th Street.	1.7	9.0
	E-7	On SW 28th Street. Approximately 620 feet east of the intersection of SW 12th Avenue and SW 28th Street.	4.7	6.0
	E-8	On SW 12th Avenue, between SW 31st Street and SW 32nd Street.	1.5	4.0
	E-9	On SW 29th Street. Approximately 240 feet east of the intersection of SW 12th Avenue and SW 29th Street.	-	-
	E-10	On SW 9th Avenue, between SW 30st Street and SW 31st Street.	6.0	3.0
	E-11	Intersection of SW 8th Avenue and SW 30th Street.	3.7	4.0
	E-12	Intersection of SW 8th Avenue and SW 28th Street.	5.0	4.0
	E-13	On SW 9th Avenue, between SW 26th Court and SW 27th Court.	1.7	6.0
	E-14	On the west side of S Andrews Avenue. Near the intersection of S Andrews Avenue and SE 26th Street.	3.5	4.0
	E-15	On S Andrews Avenue. Between SE 30th Street and SE 31st Street.	3.0	4.0
Progresso	P-1	On the east side of SW 4th Avenue. Approximately 100 feet north of the intersection of Himmarshee Street and SW 4th Avenue.	3.0	4.0
	P-2	On NW 5th Avenue. Approximately 150 feet north of the intersection of Broward Boulevard and NW 5th Avenue.	3.2	2.0
	P-3	Intersection of NW 2nd Street and NW 4th Avenue.	2.7	6.0
	P-4	Intersection of NW 7th Street and NW 3rd Avenue.	1.2	8.0
	P-5	Intersection of NW 7th Street and NW 3rd Avenue.	-	-
	P-6	Approximately 130 feet north of NW 8th Street and between NW 4th Avenue and NW 3rd Avenue.	-	-
	P-7	On NW 7th Avenue. Between NW 5th Street and NW 4th Street.	2.0	7.0
	P-8	Intersection of NW 7th Street and NW 7th Terrace.	1.7	7.0
River Oaks	R-1	On SW 15th Avenue. Approximately 100 feet north of the intersection of SW 15th Avenue and Marina Boulevard.	2.7	6.0

Neighborhood	Boring No.	Boring Location Remarks	Asphalt Thickness (inches)	Base Course Thickness* (inches)
River Oaks	R-2	On SW 15th Avenue. Between SW 22nd Avenue and SW 23rd Street.	1.5	8.0
	R-3	On SW 24th Street. Between SW 18th Terrace and SW 24th Street.	1.5	6.0
	R-4	At the intersection of SW 17th Avenue and SW 22nd Street.	1.0	6.0
	R-5	On SW 19th Avenue. Between SW 21st Street and SW 22nd Street.	1.7	6.0
	R-6	On SW 20th Street. Between SW 15th Avenue and Coconut Drive.	5.0	10.0
	R-7	At the intersection of SW 18th Court and SW 14th Avenue.	2.0	8.0
	R-8	At the intersection of SW 17th Street and SW 13th Avenue.	1.2	9.0
	R-9	Approximately 610 feet west of the intersection of SW 19th Avenue and SW 21st Street. Near a wooded area.	-	-
	R-10	Approximately 550 feet west of the intersection of SW 19th Avenue and SW 21st Street. Near a wooded area.	-	-
	R-11	Approximately 150 feet north west of the intersection of SW 19th Avenue and SW 23rd Court.	-	-
	R-12	Approximately 240 feet north west of the intersection of SW 19th Avenue and SW 23rd Court.	-	-
	R-13	Intersection of SW 18th Court and SW 10th Avenue.	1.7	9.0
Southeast Isles	S-1	Approximately 65 feet west of the intersection of SE 17th Way and Mola Avenue.	-	-
	S-2	On the south side of E Las Olas Boulevard, between SE 18th Avenue and Lido Drive.	-	-
	S-3	On the west side of Lido Drive, approximately 130 feet south of the intersection of E Las Olas Boulevard and Lido Drive.	-	-
	S-4	On the south side of E Las Olas Boulevard, between Royal Plaza Drive and Isle of Palms Drive.	-	-
	S-5	On the south side of E Las Olas Boulevard. Approximately 100 feet west of the intersection of E Las Olas Boulevard and Sunset Drive.	-	-
	S-6	In the south-east quadrant of the intersection of E Las Olas Boulevard and Poinciana Drive. In Merle Fogg Park.	-	-

Neighborhood	Boring No.	Boring Location Remarks	Asphalt Thickness (inches)	Base Course Thickness* (inches)
Southeast Isles	S-7	In the south-east quadrant of the intersection of E Las Olas Boulevard and Poinciana Drive. In Merle Fogg Park.	-	-
Victoria Park	V-1	Intersection of NE 6th Street and NE 10th Avenue.	3.0	7.0
	V-2	Intersection of NE 6th Street and NE 16th Avenue.	7.0	4.0
	V-3	Intersection of NE 9th Street and NE 15th Avenue.	2.0	6.0
	V-4	Intersection of NE 8th Street and NE 16th Terrace.	3.8	3.0
	V-5	Intersection of NE 7th Street and NE 17th Way.	1.0	7.0
	V-6	On Victoria Trace. Approximately 250 feet north of the intersection of NE 5th Street and Victoria Way.	2.0	7.0
	V-7	Intersection of NE 20th Avenue and NE 19th Avenue.	3.0	6.0
	V-8	Intersection of NE 20th Avenue and NE 7th Street.	5.0	6.0
	V-9	Approximately 160 feet east of the intersection of NE 20th Avenue and NE 7th Street.	-	-
	V-10	On NE 20th Avenue. Approximately 900 feet north of the intersection of NE 20th Avenue and NE 7th Street.	2.2	9.0

*Base course thicknesses were measured in the field to the nearest half inch.

4.3 GROUNDWATER LEVEL MEASUREMENTS

After completion of the borings and after a short stabilization period, the depth to the groundwater was measured from the existing ground surface in each boring. The measured groundwater depth is plotted adjacent to the soil profiles shown on the attached *Subsurface Profiles*, Sheets 3A through 10D.

5.0 LABORATORY TESTING

5.1 GENERAL

Representative soils samples collected from the borings were visually reviewed in the laboratory by a RADISE Geotechnical Engineer to confirm field classifications. The samples were classified in general accordance with the Unified Soil Classification System (USCS). The classifications were based on visual observations supplemented by laboratory test results performed on selected representative SPT samples. Laboratory index tests consisting of Full Sieve Analysis, Percent

Passing No. 200 Sieve, Moisture, Atterberg limits, and Organics Content tests were performed on selected samples to further confirm and finalize field soils classifications.

5.2 LABORATORY TEST RESULTS

Test assignments were provided by a Geotechnical Engineer during the laboratory review of secured soil samples. Laboratory assignments were made to supplement and confirm soil classification at each general boring location.

The following list summarizes the types and numbers of laboratory tests performed.

- One hundred (100) Moisture Content Tests (ASTM D 2216).
- Sixty-six (66) Organics Content Tests (ASTM 2216 D).
- Twenty-seven (27) Full Sieve Analysis Test (ASTM D422).
- Eighteen (18) Percent Passing No. 200 Sieve Tests (ASTM D 1140).
- Three (3) Atterberg limits tests (ASTM D 4318).

All of the laboratory test results are presented on the attached *Subsurface Profiles*, Sheet 3A through 10D, and on Table A - *Laboratory Test Results Summary* in Appendix A.

6.0 SURFACE AND SUBSURFACE EXPLORATION

6.1 STRATIGRAPHY

Stratification of the explored soils is based on visual examination of the recovered soil samples, index testing, laboratory classification and interpretation of the field boring logs by a geotechnical engineer in accordance with the Unified Soil Classification System (USCS). Subsurface profiles showing the soil stratification at the boring locations were developed and are presented on the attached *Subsurface Profiles*, Sheets 3A through 10D. Stratification lines represent approximate boundaries between soil types, but the actual transition between layers may be gradual or abrupt. Additionally, soil and groundwater conditions will vary between boring locations.

The encountered soils generally consisted of sand with varying amounts of silt and limestone fragments mostly underlain by limestone. Some of the borings encountered a layer of soil containing appreciable amounts of organic matter. Generalized descriptions of the soil stratigraphy are provided in Table 3:

TABLE 3 - STRATIGRAPHY

Stratum No.	Description	USCS Class.
1	Brown, fine to medium SAND, occasionally with Gravel, Limestone fragments, and Silt	SP, SP-SM
2	Gray, fine to medium Silty SAND, occasionally with Gravel and Limestone fragments	SM
3	Gray, Sandy SILT	ML
4	Tan to gray, LIMESTONE	-
5	Tan, Sandy LIMESTONE	-
6	Dark Brown Organic Material/Peat	PT

It is noted that the Layer 6: Dark Brown Organic Material/Peat were primarily encountered in the borings performed in the River Oaks, Southeast Isles, and Victoria Park neighborhoods. Review of the boring logs and boring locations for the River Oaks neighborhood area indicates that the organic material was encountered in the borings performed in an undeveloped, wooded area adjacent to the east side of Interstate I-95 and just south of the South Fork New River. It appears this area contains a layer of fill soils placed over organic soils along the south side of the South Fork New River. Review of the boring logs and boring locations for the Southeast Isles and Victoria Park neighborhood areas indicates that there appear to be layers of fill soils which were placed over remnant buried mangrove preserve areas along the Intracoastal Waterway. This land reclamation work occurred during early 1920's to allow residential and commercial development of the coastal Ft. Lauderdale area.

Table 4 summarizes the borings, depths and thickness of the Stratum 6 soils, which have organic contents ranging from 5.3 to 67.3 percent:

TABLE 4 – STRATUM 6 SOILS (PEAT)

Boring No.	Depth from (feet)	Depth to (feet)	Organic layer thickness (feet)
R-9	2	6	4
R-10	2	4	2
R-12	4	6	2
S-2	4	10	6
S-3	6	8	2
S-4	4	8	4

Boring No.	Depth from (feet)	Depth to (feet)	Organic layer thickness (feet)
S-5	4	10	6
S-8	2	6	4
S-14	4	9	5
S-15	4	9	5
S-16	4	6	2
S-17	4	12	8
S-18	4	12	8
S-19	4	12	8
S-20	4	8	4
S-21	4	6	2
S-22	8	12	4
S-23	8	12	4
S-23	8	10	2
S-27	8	10	2
S-28	0	2	2
S-29	6	10	4
S-30	2	6	4
S-30	10	15	5
S-31	4	10	6
S-32	4	8	6
S-33	2	10	8
V-1	4	8	4
V-7	4	8	4
V-8	4	10	6
V-10	8	10	2

6.2 GROUNDWATER LEVELS

Groundwater was encountered in each of the SPT borings. The groundwater level varied between 0.5 to 6.5 feet below the existing ground surface. It is our recommendation that the seasonal high groundwater table levels along the various project infrastructure alignments, be based on the normal high tide water levels of the adjacent waterways existing near the various neighborhood project areas and with additional geotechnical explorations. In inland areas not directly influenced by the water levels in the adjacent waterways and canals, normal high groundwater levels can be expected to be on the order of as much as two feet above the measured groundwater levels in the borings. It should be noted that the groundwater levels will fluctuate with variations of precipitation.

Borings P-4 and P-7 encountered groundwater at 0.5 feet below the existing ground surface. These two boings were performed in the Progresso neighborhood and the high groundwater is suspected be caused by adjacent exfiltration trenches which were filled up from recent storm events.

7.0 ENGINEERING CONSIDERATIONS AND RECOMMENDATIONS

The soils encountered in the majority of the borings performed for this study will be suitable for the proposed construction. However, it was previously noted that the portions of the River Oaks, Victoria Park and Southeast Isles areas are likely historical land reclamation areas. These areas as well as several others in the surrounding region, were infilled sometime in the historical past to facilitate the construction of the present residential communities.

The presence of the buried organics will be problematic to the installation of underground utilities especially when the inverts of such systems are founded in the organic layers. Such organics have very low shear strengths and will not support significant excavations made within or through them. As such, it is anticipated that the significant use of sliding trench boxes/shoring/sheet piling will be required to install infrastructure systems in this area.

Lift station structures are anticipated to be constructed well into the underlying sands and limestones. Uplift flotation resistance may be a concern for their design and construction. The buried organics encountered are expected to have little effect on the stability of the wet well structures in the ground since the bottom of the wet wells will be bearing in the sand and limestone layers. Sheet piling will likely be required to support excavations for these deep structures.

Valve vault and pavement structures are anticipated to be constructed above the buried organics. The organic material can remain in-place and a geogrid layer can be placed below the bottom of the valve vault and pavement bedding materials during construction.

7.1 SEAWALL STRUCTURE DESIGN RECOMMENDATIONS

We understand new seawalls are proposed on to be constructed within 18 inches on the water side of the existing seawalls. A #57 stone backfill is proposed for filling between the existing seawalls and the new seawalls. Fourteen (14) separate seawall segments are proposed. Twenty-six (26) SPT borings were performed for the seawall structures. The adjacent roadway or park, approximate wall length, and borings performed for each wall are presented in Table 5:

Table 5 – Sea Wall Locations and Lengths

Seawall Number	Adjacent to	Approximate Length of Wall (feet)	Borings
Seawall 9	Victoria Park	110	S-28

Seawall Number	Adjacent to	Approximate Length of Wall (feet)	Borings
Seawall 10	NE 23rd Avenue	275	S-29
Seawall 12	E Las Olas Boulevard	90	S-15
Seawall 13	E Las Olas Boulevard	80	S-14
Seawall 14	E Las Olas Boulevard	90	S-13
Seawall 15	Isle of Palms Drive	910	S-9 through S-12
Seawall 17	SE 5th Street	170	S-8
Seawall 29	Cordova Road	2,440	S-17 through S-23
Seawall 30	SE 10th Street	360	S-26 and S-27
Seawall 32	Mola Avenue	215	S-16
Seawall 34	Barcelona Drive	110	S-30
Seawall 35	SE 8th Street	550	S-24 and S-25
TBD	Hendricks Isle	255	S-31 and S-32
TBD	Hendricks Isle	65	S-33

7.1.1 SOIL DESIGN PARAMETERS FOR SEAWALLS

Geotechnical soil design parameters for the seawall systems were derived based on field data, laboratory test data, established empirical correlations based on SPT N-values, and our experience. The design soil parameters were developed on an average boring soil profile/per wall basis.

The proposed seawalls will be subjected to lateral earth pressures. The final design elevation of the wall base was not decided and provided at the time of this study. The seawalls will be subjected to lateral at-rest or active earth pressures acting in the direction of the adjacent canal. We have also assumed that adequate drainage provisions will be incorporated into the wall design as needed to prevent hydrostatic build up behind the walls where practical.

The lateral active earth pressures acting on the roadway side of the seawalls, will primarily be resisted by the lateral wall resistance resulting from the wall embedment below the canal side ground elevation exterior face of the wall. The recommend soil parameters with respect to strata are presented in Tables 6 through 20. Input parameters for LPILE are also included in Tables 6 through 20. LPILE is a special-purpose program published by ENSOFT Inc and is used for analyzing a single pile (or drilled shaft) under lateral loading using the p-y method.

Table 6 – Recommended Soil Parameters for Seawall #9 (Boring S-28)

Depth [1] (ft. – ft.)	Average N_{ES}	Recommended Values					Earth Pressure (Rankine's) Coefficients			LPILE Parameters			Soil Class. (USCS/ Soil Type)
		Friction Angle (Degrees)	Total Unit Weight (pcf)	Submerged Unit Weight (pcf)	Wall Friction Angle [4] (Degrees) with Steel	Wall Friction Angle [4] (Degrees) with Concrete	Active, Ka	Passive, Kp	At rest, K_O	Cohesion (psf)	Subgrade Modulus (k, pci)	E50 [2]	
0 – 2	4	22	75	13	11	14	0.455	2.198	0.625	–	5	–	PT
2 – 4	4	29	102	40	16	22	0.347	2.882	0.515	–	10	–	SM
4 – 6	14	36	110	48	19	26	0.260	3.852	0.412	–	30	–	Limestone
6 – 10	6	30	105	43	16	23	0.333	3.000	0.500	–	12	–	Limestone
10 – 20	15	37	110	48	20	26	0.249	4.023	0.398	–	35	–	Limestone
20 – 25	1	28	105	43	15	21	0.361	2.770	0.531	–	5	–	Limestone
25 – 30	29	40	115	53	22	26	0.217	4.599	0.357	4,000	1,000	0.004	Limestone[3]
30 – 40	76	38	115	53	17	22	0.238	4.204	0.384	–	125	–	SP
40 – 45	4	29	105	43	16	22	0.347	2.882	0.515	–	10	–	Limestone
45 – 50	12	36	110	48	19	26	0.260	3.852	0.412	–	25	–	Limestone

Note: 1. Depth below the existing ground surface.
2. E50 is soil stain parameters for LPILE software analysis.
3. Hard Limestone layer should be modeled as Hard to Stiff Clay in LPILE software analysis.
4. Wall friction angle is based on Table 3-3 in the US Army Corps of Engineers Manual (Design of Sheet Pile Walls, EM 1110-2-2504).

Table 7 – Recommended Soil Parameters for Seawall #10 (Boring S-29)

Depth [1] (ft. – ft.)	Average N_{ES}	Recommended Values					Earth Pressure (Rankine's) Coefficients			LPILE Parameters			Soil Class. (USCS/ Soil Type)
		Friction Angle (Degrees)	Total Unit Weight (pcf)	Submerged Unit Weight (pcf)	Wall Friction Angle [4] (Degrees) with Steel	Wall Friction Angle [4] (Degrees) with Concrete	Active, Ka	Passive, Kp	At rest, K_O	Cohesion (psf)	Subgrade Modulus (k, pci)	E50 [2]	
0 – 6	17	32	114	52	17	22	0.307	3.255	0.470	–	40	–	SP, SP-SM
6 – 10	11	24	82	20	12	15	0.422	2.371	0.593	–	10	–	PT
10 – 40	18	38	110	48	21	26	0.238	4.204	0.384	–	45	–	Limestone
40 – 50	34	40	115	53	22	26	0.217	4.599	0.357	4,000	1,000	0.004	Limestone[3]

Note: 1. Depth below the existing ground surface.
2. E50 is soil stain parameters for LPILE software analysis.
3. Hard Limestone layer should be modeled as Hard to Stiff Clay in LPILE software analysis.
4. Wall friction angle is based on Table 3-3 in the US Army Corps of Engineers Manual (Design of Sheet Pile Walls, EM 1110-2-2504).

Table 8 – Recommended Soil Parameters for Seawall #12 (Boring S-15)

Depth [1] (ft. – ft.)	Average N_{ES}	Recommended Values					Earth Pressure (Rankine's) Coefficients			LPILE Parameters			Soil Class. (USCS/ Soil Type)
		Friction Angle (Degrees)	Total Unit Weight (pcf)	Submerged Unit Weight (pcf)	Wall Friction Angle [4] (Degrees)		Active, Ka	Passive, Kp	At rest, K_O	Cohesion (psf)	Subgrade Modulus (k, pci)	E50 [2]	
					with Steel	with Concrete							
0 – 4	14	31	110	48	17	22	0.320	3.124	0.485	–	30	–	SP, SP-SM
4 – 9	5	22	75	13	11	14	0.455	2.198	0.625	–	5	–	PT
9 – 50	17	37	110	48	20	26	0.249	4.023	0.398	–	40	–	Limestone

Note: 1. Depth below the existing ground surface.
2. E50 is soil stain parameters for LPILE software analysis.
3. Hard Limestone layer should be modeled as Hard to Stiff Clay in LPILE software analysis.
4. Wall friction angle is based on Table 3-3 in the US Army Corps of Engineers Manual (Design of Sheet Pile Walls, EM 1110-2-2504).

Table 9 – Recommended Soil Parameters for Seawall #13 (Boring S-14)

Depth [1] (ft. – ft.)	Average N_{ES}	Recommended Values					Earth Pressure (Rankine's) Coefficients			LPILE Parameters			Soil Class. (USCS/ Soil Type)
		Friction Angle (Degrees)	Total Unit Weight (pcf)	Submerged Unit Weight (pcf)	Wall Friction Angle [4] (Degrees)		Active, Ka	Passive, Kp	At rest, K_O	Cohesion (psf)	Subgrade Modulus (k, pci)	E50 [2]	
					with Steel	with Concrete							
0 – 4	14	32	114	52	17	22	0.307	3.255	0.470	–	30	–	SP, SP-SM
4 – 9	6	22	75	13	11	14	0.455	2.198	0.625	–	5	–	PT
9 – 50	15	37	110	48	20	26	0.249	4.023	0.398	–	35	–	Limestone

Note: 1. Depth below the existing ground surface.
2. E50 is soil stain parameters for LPILE software analysis.
3. Hard Limestone layer should be modeled as Hard to Stiff Clay in LPILE software analysis.
4. Wall friction angle is based on Table 3-3 in the US Army Corps of Engineers Manual (Design of Sheet Pile Walls, EM 1110-2-2504).

Table 10 – Recommended Soil Parameters for Seawall #14 (Boring S-13)

Depth [1] (ft. – ft.)	Average N_{ES}	Recommended Values					Earth Pressure (Rankine's) Coefficients			LPILE Parameters			Soil Class. (USCS/ Soil Type)
		Friction Angle (Degrees)	Total Unit Weight (pcf)	Submerged Unit Weight (pcf)	Wall Friction Angle [4] (Degrees)		Active, Ka	Passive, Kp	At rest, K_O	Cohesion (psf)	Subgrade Modulus (k, pci)	E50 [2]	
					with Steel	with Concrete							
0 – 2	17	32	114	52	17	22	0.307	3.255	0.470	–	40	–	SP
2 – 8	10	30	106	44	16	22	0.333	3.000	0.500	–	20	–	SP-SM (Gravelly Sand)
8 – 10	6	30	106	44	16	22	0.333	3.000	0.500	–	12	–	SM
10 – 35	18	38	110	48	21	26	0.238	4.204	0.384	–	45	–	Limestone
35 – 40	10	30	105	43	16	22	0.333	3.000	0.500	–	20	–	Limestone
40 – 50	26	40	115	53	22	26	0.217	4.599	0.357	4,000	1,000	0.004	Limestone[3]

Note: 1. Depth below the existing ground surface.
2. E50 is soil stain parameters for LPILE software analysis.
3. Hard Limestone layer should be modeled as Hard to Stiff Clay in LPILE software analysis.
4. Wall friction angle is based on Table 3-3 in the US Army Corps of Engineers Manual (Design of Sheet Pile Walls, EM 1110-2-2504).

Table 11 – Recommended Soil Parameters for Seawall #15 (Boring S-10)

Depth [1] (ft. – ft.)	Average N_{ES}	Recommended Values					Earth Pressure (Rankine's) Coefficients			LPILE Parameters			Soil Class. (USCS/ Soil Type)
		Friction Angle (Degrees)	Total Unit Weight (pcf)	Submerged Unit Weight (pcf)	Wall Friction Angle [4] (Degrees)		Active, Ka	Passive, Kp	At rest, K_O	Cohesion (psf)	Subgrade Modulus (k, pci)	E50 [2]	
					with Steel	with Concrete							
0 – 4	17	32	114	52	17	22	0.307	3.255	0.470	–	40	–	SP-SM
4 – 8	9	30	106	44	16	22	0.333	3.000	0.500	–	17	–	SP
8 – 20	15	37	110	48	20	26	0.249	4.023	0.398	–	35	–	Limestone
20 – 25	10	30	105	43	16	22	0.333	3.000	0.500	–	20	–	Limestone
25 – 45	13	36	110	48	19	26	0.260	3.852	0.412	–	30	–	Limestone
9 – 50	10	30	105	43	16	22	0.333	3.000	0.500	–	20	–	Limestone

Note: 1. Depth below the existing ground surface.
2. E50 is soil stain parameters for LPILE software analysis.
3. Hard Limestone layer should be modeled as Hard to Stiff Clay in LPILE software analysis.
4. Wall friction angle is based on Table 3-3 in the US Army Corps of Engineers Manual (Design of Sheet Pile Walls, EM 1110-2-2504).

Table 12 – Recommended Soil Parameters for Seawall #17 (Boring S-8)

Depth [1] (ft. – ft.)	Average N_{ES}	Recommended Values					Earth Pressure (Rankine's) Coefficients			LPILE Parameters			Soil Class. (USCS/ Soil Type)
		Friction Angle (Degrees)	Total Unit Weight (pcf)	Submerged Unit Weight (pcf)	Wall Friction Angle [4] (Degrees)		Active, Ka	Passive, Kp	At rest, K_O	Cohesion (psf)	Subgrade Modulus (k, pci)	E50 [2]	
					with Steel	with Concrete							
0 – 2	14	31	110	48	17	22	0.320	3.124	0.485	–	32	–	SP
2 – 6	5	22	75	13	11	14	0.455	2.198	0.625	–	5	–	PT
6 – 10	10	30	106	44	16	22	0.333	3.000	0.500	–	20	–	SP-SM
10 – 15	19	31	110	48	11	14	0.320	3.124	0.485	–	30	–	ML
15 – 40	17	37	110	48	20	26	0.249	4.023	0.398	–	40	–	Limestone
40 – 50	33	40	115	53	22	26	0.217	4.599	0.357	4,000	1,000	0.004	Limestone[3]

Note: 1. Depth below the existing ground surface.
2. E50 is soil stain parameters for LPILE software analysis.
3. Hard Limestone layer should be modeled as Hard to Stiff Clay in LPILE software analysis.
4. Wall friction angle is based on Table 3-3 in the US Army Corps of Engineers Manual (Design of Sheet Pile Walls, EM 1110-2-2504).

Table 13 – Recommended Soil Parameters for Seawall #29 (Boring S-22)

Depth [1] (ft. – ft.)	Average N_{ES}	Recommended Values					Earth Pressure (Rankine's) Coefficients			LPILE Parameters			Soil Class. (USCS/ Soil Type)
		Friction Angle (Degrees)	Total Unit Weight (pcf)	Submerged Unit Weight (pcf)	Wall Friction Angle [4] (Degrees)		Active, Ka	Passive, Kp	At rest, K_O	Cohesion (psf)	Subgrade Modulus (k, pci)	E50 [2]	
					with Steel	with Concrete							
0 – 4	11	31	110	48	17	22	0.320	3.124	0.485	–	22	–	SP
4 – 12	1	20	66	70	8	14	0.490	2.040	0.658	–	2	–	PT/CL
12 – 20	20	38	110	48	21	26	0.238	4.204	0.384	–	50	–	Limestone
20 – 25	10	30	105	43	16	23	0.333	3.000	0.500	–	20	–	Limestone
25 – 38	11	31	110	48	17	22	0.320	3.124	0.485	–	22	–	SP
38 – 50	14	36	110	48	19	26	0.260	3.852	0.412	–	32	–	Limestone

Note: 1. Depth below the existing ground surface.
2. E50 is soil stain parameters for LPILE software analysis.
3. Hard Limestone layer should be modeled as Hard to Stiff Clay in LPILE software analysis.
4. Wall friction angle is based on Table 3-3 in the US Army Corps of Engineers Manual (Design of Sheet Pile Walls, EM 1110-2-2504).

Table 14 – Recommended Soil Parameters for Seawall #30 (Boring S-26)

Depth [1] (ft. – ft.)	Average N_{ES}	Recommended Values					Earth Pressure (Rankine's) Coefficients			LPILE Parameters			Soil Class. (USCS/ Soil Type)
		Friction Angle (Degrees)	Total Unit Weight (pcf)	Submerged Unit Weight (pcf)	Wall Friction Angle [4] (Degrees)		Active, Ka	Passive, Kp	At rest, K_O	Cohesion (psf)	Subgrade Modulus (k, pci)	E50 [2]	
					with Steel	with Concrete							
0 – 4	26	35	120	58	17	22	0.271	3.690	0.426	–	68	–	SP
4 – 8	15	32	114	52	17	22	0.307	3.255	0.470	–	35	–	SP-SM
8 – 10	4	22	75	13	11	14	0.455	2.198	0.625	–	5	–	PT
10 – 20	27	40	115	53	22	26	0.217	4.599	0.357	4,000	1,000	0.004	Limestone[3]
20 – 25	4	29	105	43	16	22	0.347	2.882	0.515	–	10	–	Limestone
25 – 35	14	37	110	48	20	26	0.249	4.023	0.398	–	32	–	Limestone
35 – 40	10	30	105	43	16	23	0.333	3.000	0.500	–	20	–	Limestone
40 – 50	12	36	110	48	19	26	0.260	3.852	0.412	–	25	–	Limestone

Note: 1. Depth below the existing ground surface.
2. E50 is soil stain parameters for LPILE software analysis.
3. Hard Limestone layer should be modeled as Hard to Stiff Clay in LPILE software analysis.
4. Wall friction angle is based on Table 3-3 in the US Army Corps of Engineers Manual (Design of Sheet Pile Walls, EM 1110-2-2504).

Table 15 – Recommended Soil Parameters for Seawall #32 (Boring S-16)

Depth [1] (ft. – ft.)	Average N_{ES}	Recommended Values					Earth Pressure (Rankine's) Coefficients			LPILE Parameters			Soil Class. (USCS/ Soil Type)
		Friction Angle (Degrees)	Total Unit Weight (pcf)	Submerged Unit Weight (pcf)	Wall Friction Angle [4] (Degrees)		Active, Ka	Passive, Kp	At rest, K_O	Cohesion (psf)	Subgrade Modulus (k, pci)	E50 [2]	
					with Steel	with Concrete							
0 – 4	12	31	110	48	17	22	0.320	3.124	0.485	–	25	–	SP
4 – 6	9	24	82	20	12	15	0.422	2.371	0.593	–	10	–	PT
6 – 10	6	30	106	44	16	22	0.333	3.000	0.500	–	12	–	SP
10 – 30	16	37	110	48	20	26	0.249	4.023	0.398	–	38	–	Limestone
30 – 35	29	40	115	53	22	26	0.217	4.599	0.357	4,000	1,000	0.004	Limestone[3]
35 – 50	20	38	110	48	21	26	0.238	4.204	0.384	–	50	–	Limestone

Note: 1. Depth below the existing ground surface.
2. E50 is soil stain parameters for LPILE software analysis.
3. Hard Limestone layer should be modeled as Hard to Stiff Clay in LPILE software analysis.
4. Wall friction angle is based on Table 3-3 in the US Army Corps of Engineers Manual (Design of Sheet Pile Walls, EM 1110-2-2504).

Table 16 – Recommended Soil Parameters for Seawall #34 (Boring S-30)

Depth [1] (ft. – ft.)	Average N_{ES}	Recommended Values					Earth Pressure (Rankine's) Coefficients			LPILE Parameters			Soil Class. (USCS/ Soil Type)
		Friction Angle (Degrees)	Total Unit Weight (pcf)	Submerged Unit Weight (pcf)	Wall Friction Angle [4] (Degrees)		Active, Ka	Passive, Kp	At rest, K_O	Cohesion (psf)	Subgrade Modulus (k, pci)	E50 [2]	
					with Steel	with Concrete							
0 – 2	16	32	114	52	17	22	0.307	3.255	0.470	–	37	–	SP
2 – 6	12	24	82	20	11	14	0.422	2.371	0.593	–	10	–	PT
6 – 10	4	29	102	40	16	22	0.347	2.882	0.515	–	10	–	SP
10 – 15	21	25	86	24	11	14	0.406	2.464	0.577	–	15	–	PT
15 – 20	15	37	110	48	20	26	0.249	4.023	0.398	–	35	–	Limestone
20 – 30	26	40	115	53	22	26	0.217	4.599	0.357	4,000	1,000	0.004	Limestone[3]
30 – 50	19	38	110	48	21	26	0.238	4.204	0.384	–	47	–	Limestone

Note: 1. Depth below the existing ground surface.
2. E50 is soil stain parameters for LPILE software analysis.
3. Hard Limestone layer should be modeled as Hard to Stiff Clay in LPILE software analysis.
4. Wall friction angle is based on Table 3-3 in the US Army Corps of Engineers Manual (Design of Sheet Pile Walls, EM 1110-2-2504).

Table 17 – Recommended Soil Parameters for Seawall #35 (Boring S-25)

Depth [1] (ft. – ft.)	Average N_{ES}	Recommended Values					Earth Pressure (Rankine's) Coefficients			LPILE Parameters			Soil Class. (USCS/ Soil Type)
		Friction Angle (Degrees)	Total Unit Weight (pcf)	Submerged Unit Weight (pcf)	Wall Friction Angle [4] (Degrees)		Active, Ka	Passive, Kp	At rest, K_O	Cohesion (psf)	Subgrade Modulus (k, pci)	E50 [2]	
					with Steel	with Concrete							
0 – 4	17	32	114	52	17	22	0.307	3.255	0.470	–	40	–	SP
4 – 10	11	31	110	48	17	22	0.320	3.124	0.485	–	22	–	SP
10 – 50	16	37	110	48	20	26	0.249	4.023	0.398	–	37	–	Limestone

Note: 1. Depth below the existing ground surface.
2. E50 is soil stain parameters for LPILE software analysis.
3. Hard Limestone layer should be modeled as Hard to Stiff Clay in LPILE software analysis.
4. Wall friction angle is based on Table 3-3 in the US Army Corps of Engineers Manual (Design of Sheet Pile Walls, EM 1110-2-2504).

Table 18 – Recommended Soil Parameters for Seawall TBD1 (Boring S-31)

Depth [1] (ft. – ft.)	Average N_{ES}	Recommended Values					Earth Pressure (Rankine's) Coefficients			LPILE Parameters			Soil Class. (USCS/ Soil Type)
		Friction Angle (Degrees)	Total Unit Weight (pcf)	Submerged Unit Weight (pcf)	Wall Friction Angle [4] (Degrees)		Active, Ka	Passive, Kp	At rest, K_O	Cohesion (psf)	Subgrade Modulus (k, pci)	E50 [2]	
					with Steel	with Concrete							
0 – 4	7	30	106	44	16	22	0.333	3.000	0.500	–	12	–	SP
4 – 10	2	24	82	20	11	14	0.422	2.371	0.593	–	2	–	PT
10 – 20	29	40	135	73	22	26	0.217	4.599	0.357	4,000	1,000	0.004	Limestone[3]
20 – 40	50	40	135	73	22	26	0.217	4.599	0.357	4,000	1,000	0.004	Limestone[3]
40 – 50	19	33	115	53	18	22	0.295	3.392	0.455	–	47	–	SP

Note: 1. Depth below the existing ground surface.
2. E50 is soil stain parameters for LPILE software analysis.
3. Hard Limestone layer should be modeled as Hard to Stiff Clay in LPILE software analysis.
4. Wall friction angle is based on Table 3-3 in the US Army Corps of Engineers Manual (Design of Sheet Pile Walls, EM 1110-2-2504).

Table 19 – Recommended Soil Parameters for Seawall TBD1 (Boring S-32)

Depth [1] (ft. – ft.)	Average N_{ES}	Recommended Values					Earth Pressure (Rankine's) Coefficients			LPILE Parameters			Soil Class. (USCS/ Soil Type)
		Friction Angle (Degrees)	Total Unit Weight (pcf)	Submerged Unit Weight (pcf)	Wall Friction Angle [4] (Degrees)		Active, Ka	Passive, Kp	At rest, K_O	Cohesion (psf)	Subgrade Modulus (k, pci)	E50 [2]	
					with Steel	with Concrete							
0 – 4	6	29	102	40	16	22	0.347	2.882	0.515	–	12	–	SP
4 – 18	4	24	82	20	11	14	0.422	2.371	0.593	–	5	–	PT
8 – 10	14	31	110	48	17	22	0.320	3.124	0.485	–	30	–	SP
10 – 20	11	31	135	73	17	24	0.320	3.124	0.485	–	25	–	Limestone
20 – 40	39	40	135	73	22	26	0.217	4.599	0.357	4,000	1,000	0.004	Limestone[3]
40 - 50	17	32	114	52	17	22	0.307	3.255	0.470	–	38	–	SP

Note: 1. Depth below the existing ground surface.
2. E50 is soil stain parameters for LPILE software analysis.
3. Hard Limestone layer should be modeled as Hard to Stiff Clay in LPILE software analysis.
4. Wall friction angle is based on Table 3-3 in the US Army Corps of Engineers Manual (Design of Sheet Pile Walls, EM 1110-2-2504).

Table 20 – Recommended Soil Parameters for Seawall TBD2 (Boring S-33)

Depth [1] (ft. – ft.)	Average N_{ES}	Recommended Values					Earth Pressure (Rankine's) Coefficients			LPILE Parameters			Soil Class. (USCS/ Soil Type)
		Friction Angle (Degrees)	Total Unit Weight (pcf)	Submerged Unit Weight (pcf)	Wall Friction Angle [4] (Degrees)		Active, Ka	Passive, Kp	At rest, K_O	Cohesion (psf)	Subgrade Modulus (k, pci)	E50 [2]	
					with Steel	with Concrete							
0 – 2	3	29	102	40	16	22	0.347	2.882	0.515	–	5	–	SP
2 – 10	2	24	82	20	11	14	0.422	2.371	0.593	–	2	–	PT
10 – 20	1	28	98	36	15	21	0.361	2.770	0.531	–	5	–	SP
20 – 30	27	35	135	73	19	22	0.271	3.690	0.426	–	68	–	SP
30 – 40	64	40	135	73	22	26	0.217	4.599	0.357	4,000	1,000	0.004	Limestone[3]
40 - 50	22	33	115	53	18	22	0.295	3.392	0.455	–	55	–	SP

Note: 1. Depth below the existing ground surface.
2. E50 is soil stain parameters for LPILE software analysis.
3. Hard Limestone layer should be modeled as Hard to Stiff Clay in LPILE software analysis.
4. Wall friction angle is based on Table 3-3 in the US Army Corps of Engineers Manual (Design of Sheet Pile Walls, EM 1110-2-2504).

7.2 FOUNDATION RECOMMENDATIONS FOR PUMP STATIONS

Based on the geotechnical exploration and providing the subgrade preparation procedures presented below are followed, it is our opinion that the sites are suitable for the planned pump station construction. The proposed structures may be supported on a mat foundation.

Following the in-situ foundation preparation recommendations below, the proposed structure foundations may bear within the prepared existing sands and limestones beneath the organic materials. The net allowable soil bearing pressures are provided in Tables 21 through 32. The net bearing pressure is defined as the soil bearing pressure at the foundation bearing level in excess of the natural overburden pressure at that level. To verify suitable bearing, we recommend that the foundation excavation subgrade be checked by a geotechnical engineer just prior to mat rebar placement. The excavation bottom should be kept as dry as practically possible during construction.

Resistance to lateral loads can be derived from 1) passive pressure acting on the sides of the foundations and any grade beams, and 2) lateral resistance along the base of the foundations. Lateral resistance derived from friction between the soil and the bases of the footings should be calculated based on a friction factor of 0.35 times the base contact bearing pressure. Passive resistance of the upper foot of soil should be neglected, unless it is confined by a slab or pavement. Passive resistance on the sides of the foundations should be ignored if these soils can be hypothetically washed away during a hurricane storm event.

A subgrade modulus of 250 psi/in may be used in the design of a mat/raft foundation provided that the subgrade and subsequent engineered granular fill is prepared as described below. A 6-inch

leveling layer of clean (less than 5% passing a #200 sieve) granular fill is recommended to be placed directly below slab-on-grade floors where appropriate. The granular fill should be compacted until densities of at least 95% of the maximum dry density as determined by ASTM D1557, the Modified Proctor method. Based on our assumption of a structure supported on a shallow footing or mat foundation system, the total settlement should be less than 1.0 inches, and differential settlements should be less than 0.50 inches.

7.2.1 RECOMMENDED SOIL PARAMETERS FOR PUMP STATION DESIGN

Underground pump stations for this project will need to be designed to resist pressures exerted by the adjacent soils and hydrostatic uplift head conditions on the base of the structure. For walls that are not restrained during backfilling but are free to rotate at the top, active earth pressure should be used in design. Walls that are restrained should be designed assuming at-rest pressures. Recommended soil parameters for the soils encountered at the sites are given in Tables 21 through 32.

Table 21 – SPT BORING DR-1

Boring depth (ft - ft)	Average N_{AUTO}	Average N_{ES}	Recommended Values			Earth Pressure Coefficients			Bearing Capacity (psf)
			Friction Angle (Degrees)	Total Unit Weight (pcf)	Submerged Unit Weight (pcf)	Active, Ka	Passive, Kp	At rest, Ko	
0 - 8	7	8	30	108	46	0.333	3.000	0.500	1250
8 - 10	2	2	29	106	44	0.347	2.882	0.515	400
10 - 25	15	18	33	114	52	0.295	3.392	0.455	2500
25 - 30	13	16	32	112	50	0.307	3.255	0.470	3000
30 -50	28	34	40	128	66	0.217	4.599	0.357	4000

Table 22 – SPT BORING DR-2

Boring depth (ft - ft)	Average N_{AUTO}	Average N_{ES}	Recommended Values			Earth Pressure Coefficients			Bearing Capacity (psf)
			Friction Angle (Degrees)	Total Unit Weight (pcf)	Submerged Unit Weight (pcf)	Active, Ka	Passive, Kp	At rest, Ko	
0 - 2	7	9	30	108	46	0.333	3.000	0.500	1250
2 - 4	9	11	31	110	48	0.320	3.124	0.485	1800
4 - 6	6	7	30	108	46	0.333	3.000	0.500	1200
6 - 10	3	4	29	106	44	0.347	2.882	0.515	500
10 - 30	13	16	32	112	50	0.307	3.255	0.470	3000
30 - 50	23	29	40	128	66	0.217	4.599	0.357	4000

Table 23 – SPT BORING P-5

Boring depth (ft - ft)	Average N_{AUTO}	Average N_{ES}	Recommended Values			Earth Pressure Coefficients			Bearing Capacity (psf)
			Friction Angle (Degrees)	Total Unit Weight (pcf)	Submerged Unit Weight (pcf)	Active, Ka	Passive, Kp	At rest, Ko	
0 - 2	7	9	30	108	46	0.333	3.000	0.500	1200
2 - 4	11	14	31	110	48	0.320	3.124	0.485	2000
4 - 10	7	9	30	108	46	0.333	3.000	0.500	1500
10 - 30	13	16	32	112	50	0.307	3.255	0.470	3000
30 - 50	19	24	39	126	64	0.228	4.395	0.371	4000

Table 24 – SPT BORING P-6

Boring depth (ft - ft)	Average N_{AUTO}	Average N_{ES}	Recommended Values			Earth Pressure Coefficients			Bearing Capacity (psf)
			Friction Angle (Degrees)	Total Unit Weight (pcf)	Submerged Unit Weight (pcf)	Active, Ka	Passive, Kp	At rest, Ko	
0 - 2	4	5	29	106	44	0.347	2.882	0.515	750
2 - 4	9	11	31	110	48	0.320	3.124	0.485	1500
4 - 10	6	7	30	108	46	0.333	3.000	0.500	1000
10 - 30	13	16	32	112	50	0.307	3.255	0.470	3000
30 - 50	19	24	39	126	64	0.228	4.395	0.371	4000

Table 25 – SPT BORING R-9

Boring depth (ft - ft)	Average N_{AUTO}	Average N_{ES}	Recommended Values			Earth Pressure Coefficients			Bearing Capacity (psf)
			Friction Angle (Degrees)	Total Unit Weight (pcf)	Submerged Unit Weight (pcf)	Active, Ka	Passive, Kp	At rest, Ko	
0 - 2	9	11	31	110	48	0.320	3.124	0.485	1500
2 - 6	7	9	27	102	40	0.376	2.663	0.546	1000
6 - 8	3	4	29	106	44	0.347	2.882	0.515	500
8 - 15	7	9	30	108	46	0.333	3.000	0.500	1500
15 - 25	14	17	32	112	50	0.307	3.255	0.470	2500
25 - 30	7	9	30	108	46	0.333	3.000	0.500	2500
30 - 50	10	12	31	110	48	0.320	3.124	0.485	3000

Table 26 – SPT BORING R-10

Boring depth (ft - ft)	Average N_{AUTO}	Average N_{ES}	Recommended Values			Earth Pressure Coefficients			Bearing Capacity (psf)
			Friction Angle (Degrees)	Total Unit Weight (pcf)	Submerged Unit Weight (pcf)	Active, Ka	Passive, Kp	At rest, Ko	
0 - 2	9	11	31	110	48	0.320	3.124	0.485	1500
2 - 4	6	7	27	102	40	0.376	2.663	0.546	1000
4 - 6	9	11	31	110	48	0.320	3.124	0.485	1500
6 - 8	5	6	30	108	46	0.333	3.000	0.500	750
8 - 10	3	4	29	106	44	0.347	2.882	0.515	500
10 - 15	7	9	30	108	46	0.333	3.000	0.500	1250
15 - 20	9	11	31	110	48	0.320	3.124	0.485	1750
20 - 25	8	10	30	108	46	0.333	3.000	0.500	1750
25 - 50	11	14	31	110	48	0.320	3.124	0.485	2500

Table 27 – SPT BORING R-11

Boring depth (ft - ft)	Average N_{AUTO}	Average N_{ES}	Recommended Values			Earth Pressure Coefficients			Bearing Capacity (psf)
			Friction Angle (Degrees)	Total Unit Weight (pcf)	Submerged Unit Weight (pcf)	Active, Ka	Passive, Kp	At rest, Ko	
0 - 4	7	8	30	108	46	0.333	3.000	0.500	1100
4 - 6	3	4	29	106	44	0.347	2.882	0.515	500
6 - 15	7	9	30	108	46	0.333	3.000	0.500	1250
15 - 30	19	24	34	116	54	0.283	3.537	0.441	3000
30 - 40	28	35	37	122	60	0.249	4.023	0.398	4000
40 - 50	19	24	34	116	54	0.283	3.537	0.441	4000

Table 28 – SPT BORING R-12

Boring depth (ft - ft)	Average N_{AUTO}	Average N_{ES}	Recommended Values			Earth Pressure Coefficients			Bearing Capacity (psf)
			Friction Angle (Degrees)	Total Unit Weight (pcf)	Submerged Unit Weight (pcf)	Active, Ka	Passive, Kp	At rest, Ko	
0 - 4	8	10	30	108	46	0.333	3.000	0.500	1500
4 - 6	2	2	10	68	6	0.704	1.420	0.826	0

Boring depth (ft - ft)	Average N_{AUTO}	Average N_{ES}	Recommended Values			Earth Pressure Coefficients			Bearing Capacity (psf)
			Friction Angle (Degrees)	Total Unit Weight (pcf)	Submerged Unit Weight (pcf)	Active, Ka	Passive, Kp	At rest, Ko	
6 - 8	9	11	31	110	48	0.320	3.124	0.485	1500
8 - 15	6	7	30	108	46	0.333	3.000	0.500	1000
15 - 35	20	25	34	116	54	0.283	3.537	0.441	3000
35 - 40	29	36	35	118	56	0.271	3.690	0.426	4000
40 - 50	20	25	34	116	54	0.283	3.537	0.441	4000

Table 29 – SPT BORING S-6

Boring depth (ft - ft)	Average N_{AUTO}	Average N_{ES}	Recommended Values			Earth Pressure Coefficients			Bearing Capacity (psf)
			Friction Angle (Degrees)	Total Unit Weight (pcf)	Submerged Unit Weight (pcf)	Active, Ka	Passive, Kp	At rest, Ko	
0 - 2	5	6	30	108	46	0.333	3.000	0.500	800
2 - 6	12	15	32	112	50	0.307	3.255	0.470	2100
6 - 8	7	9	30	108	46	0.333	3.000	0.500	1250
8 - 10	2	2	29	106	44	0.347	2.882	0.515	250
10 - 35	26	32	35	118	56	0.271	3.690	0.426	3000
35 - 50	6	7	30	108	46	0.333	3.000	0.500	2000

Table 30 – SPT BORING S-7

Boring depth (ft - ft)	Average N_{AUTO}	Average N_{ES}	Recommended Values			Earth Pressure Coefficients			Bearing Capacity (psf)
			Friction Angle (Degrees)	Total Unit Weight (pcf)	Submerged Unit Weight (pcf)	Active, Ka	Passive, Kp	At rest, Ko	
0 - 2	5	6	30	108	46	0.333	3.000	0.500	800
2 - 6	10	12	31	110	48	0.320	3.124	0.485	1750
6 - 10	6	7	30	108	46	0.333	3.000	0.500	1000
10 - 20	31	38	40	128	66	0.217	4.599	0.357	3500
20 - 25	9	11	31	110	48	0.320	3.124	0.485	2500
25 - 35	15	19	38	124	62	0.238	4.204	0.384	2750
35 - 40	7	9	30	108	46	0.333	3.000	0.500	2500
40 - 50	12	15	37	122	60	0.249	4.023	0.398	3000

Table 31 – SPT BORING V-8

Boring depth (ft - ft)	Average N_{AUTO}	Average N_{ES}	Recommended Values			Earth Pressure Coefficients			Bearing Capacity (psf)
			Friction Angle (Degrees)	Total Unit Weight (pcf)	Submerged Unit Weight (pcf)	Active, Ka	Passive, Kp	At rest, Ko	
0 - 4	14	17	32	112	50	0.307	3.255	0.470	2500
4 - 10	3	4	10	68	6	0.704	1.420	0.826	0
10 - 20	10	12	36	120	58	0.260	3.852	0.412	1500
20 - 30	12	15	32	112	50	0.307	3.255	0.470	2500
30 - 50	35	43	40	128	66	0.217	4.599	0.357	4000

Table 32 – SPT BORING V-9

Boring depth (ft - ft)	Average N_{AUTO}	Average N_{ES}	Recommended Values			Earth Pressure Coefficients			Bearing Capacity (psf)
			Friction Angle (Degrees)	Total Unit Weight (pcf)	Submerged Unit Weight (pcf)	Active, Ka	Passive, Kp	At rest, Ko	
0 - 6	3	3	29	106	44	0.347	2.882	0.515	400
6 - 8	11	14	31	110	48	0.320	3.124	0.485	1500
8 - 15	6	7	30	108	46	0.333	3.000	0.500	1000
15 - 35	7	9	30	108	46	0.333	3.000	0.500	1500
35 - 50	11	14	36	120	58	0.260	3.852	0.412	2000

Design should incorporate hydrostatic effects. In order to avoid wall damage due to excessive compaction, hand operated mechanical tampers should be used to densify backfill soils. Heavy vibratory compaction equipment should not be allowed within five feet of walls. The soils behind walls should consist of clean sands as described in the Select Fill Composition, Placement and Compaction section of this report and should be compacted to approximately 95 percent of the material's modified Proctor (ASTM D-1557) maximum dry density.

7.2.2 AUGER CAST PILE RECOMMENDATIONS FOR LIFT STATION DESIGN

At the time of this report, three lift stations were proposed. The proposed locations and depths of the lift stations are presented in the following Table 33:

Table 33 – Lift Station Information

Lift Station Location	Bottom Depth from existing ground surface (feet)	Borings
Merle Fogg Park	12	S-6 and S-7
River Oaks Outfall	19	R-9 through R-12
Victoria Park	16	S-28

Due to the depth of the lift stations, buoyancy is a potential concern where the weight of concrete structure is not sufficient to resist uplift without using piles in tension. Augered Cast-In Place (ACIP) concrete piles are reportingly being proposed to counter act the buoyancy forces. It is our understanding that an uplift resistance on the order of 35 tons is necessary for each lift station to counteract the buoyancy forces.

The following capacity estimates have been provided for 16-inch diameter ACIP piles:

- For the Merle Fogg Park lift station, ACIP piles tipped 50 feet below the existing ground surface can achieve approximately fifteen (15) tons of design tension capacity each.
- For the River Oaks lift station, piles tipped 50 feet below the existing ground surface can achieve approximately eight (8) tons of tension capacity each.
- For the Victoria Park lift station, piles tipped 50 feet below the existing ground surface can achieve approximately eight (8) tons of tension capacity each.

Please note that different combinations of pile depths and diameters may be considered depending on the final design. Also note that additional uplift capacity can be achieved by overbuilding the Lift Station mat so that it protrudes a few to several feet beyond the walls of the structure. Under such a design, the submerged unit weight of the soils above the outer extending foundation mat lip will help hold the structure down. If the mat is enlarged enough, the weight of the exterior submerged soils above the extending lip may be able to resist a significant portion of the uplift. For analysis purposes, an average submerged unit weight of 62.4 pcf can be used for the Lift Station backfill for that soil volume directly around the structure and above the mat. Additionally, if the Lift station were to begin to rise, it would also have to shear the soil in a box type vertical plane surrounding the structure mat perimeter. This shear will add additional uplift resistance to the structure and can be calculated using a soil Phi (ϕ) value of 32 degrees times the average normal in-situ horizontal (Ko) effective (i.e. submerged) soil pressure along the vertical plane surrounding the structure.

7.3 FOUNDATION RECOMMENDATIONS FOR ELECTRICAL EQUIPMENT BUILDINGS

Our recommendations for foundation design and construction of the electrical equipment buildings are based on the following:

1. Two buildings are proposed,
    a. One building is proposed at Merle Fogg Park, in the southeast quadrant of the intersection of E. Las Olas Boulevard and Poinciana Drive in the Southeast Isles Neighborhood. Borings S-6 and S-7 are located in this area.
    b. The second building is proposed at the River Oaks-Outfall. The River Oaks Outfall is located in the west side of the River Oaks neighborhood, adjacent to the east side of I-95 and just south of the South Fork New River. Borings R-9 through R-12 are located in this area.
2. The buildings will be one-story in height, and will house electrical equipment.
3. The floor elevation of the buildings will be approximately 6 feet above current grade.
4. The anticipated foundation system will be a combination of continuous strip footings under walls and isolated spread footing under columns.

If this information is incorrect or changes, we should be notified so we can review our recommendations and revise them if necessary.

Based on the geotechnical exploration and providing that the subgrade preparation procedures presented below are followed, it is our opinion that the site is suitable for the planned building construction. The proposed structure may be supported on shallow footings or preferably a raft mat type of foundation.

Following the in-situ foundation preparation recommendations herein, the proposed structure foundation may be designed using a net allowable soil bearing pressure of up to 1,500 pounds per square foot (psf) bearing when founded within the densified existing sands. When founded within a well compacted, elevated fill pad constructed with select engineered granular fill, a net allowable soil bearing pressure of up to 2,500 pounds per square foot (psf) bearing may be utilized.

The net bearing pressure is defined as the soil bearing pressure at the foundation bearing level more than the natural overburden pressure at that level. To verify suitable bearing, we recommend that the foundation excavation subgrade be checked by a RADISE geotechnical engineer just prior to concreting. The excavation bottom should be kept as dry as practical during construction.

A subgrade modulus of 200 psi/in may be used in the design of a mat/raft foundation if the subgrade and subsequent engineered granular fill is prepared as described below. A 6-inch layer of clean (less than 5% passing a #200 sieve) granular fill is recommended to be placed directly below slab-on-grade floors where appropriate. The granular fill should be compacted until densities of at least 95% of the maximum dry density as determined by ASTM D1557, the Modified Proctor method. This layer will aid in providing a capillary moisture break below the concrete slab. We also recommend a moisture vapor barrier be placed under all areas especially where floors will have moisture sensitive coverings, or where stored materials are moisture sensitive.

To assure an adequate factor of safety against a shearing failure in the subsoils:

- Footing base should be at a depth of at least 18 inches below lowest adjacent grades.
- Continuous footings should be at least 16 inches wide.
- Isolated foundations should not be less than 30 inches wide.
- The required embedment depth may be reduced to 12 inches if a monolithic raft/ mat slab type of foundations is used.

7.3.1 RIVER OAKS OUTFALL ELECTRICAL EQUIPMENT BUILDING

For Merle Fogg Park, none of the borings performed in this location encountered any organic material. For the River Oaks Outfall, three of the four soil borings (R-9, R-10, and R-12) performed in the area of the proposed electrical equipment building encountered a 2 to 4 feet thick layer of organic material at depths ranging from 2 to 5 feet below the existing ground surface. The evaluation of the organic material layer is only relevant for the electrical equipment building, since the bearing depth of the foundation for the lift station structure is well below the organic material layer.

The foundation for the electrical equipment building is expected to bear above the organic material layer encountered in the borings. If the organic material layer is left in place below the electrical equipment building, some total and differential settlement (both short-term “immediate-type” and long term “creep-type” secondary settlement) will occur. Such settlements result from the weight of the structural fill and structure placed above the organic material and the associated short term primary settlement and long term “creep-type” secondary settlement inherent to compressible organic soil material. Settlement caused by the encountered organic material layer beneath he structure is expected to moderately affect the proposed electrical equipment building.

If moderate settlements of the electrical equipment building on the order of 3-4 inches is considered problematic, then we recommend that to eliminate settlement related issues, the organic material encountered in the borings be excavated and removed prior to construction of the electrical equipment building. Alternatively, the organic material can be left in place and the area preloaded with 5 feet of dumped and stacked fill to induce settlement similar to the increased stress caused by the construction of the proposed control building. Excavated organic material is generally not appropriate for reuse in other construction as it has a tendency to consolidate, erode and generally bio-degrade with time. Therefore, excavated organic material should be disposed of at a suitable on or off-site location.

7.4 PAVEMENT DESIGN CONSIDERATIONS

The following information is provided and intended as a guideline only, as the roadway or any replacements/repairs thereof, should be designed specifically for the vehicle load intensities for the respective roadways and frequencies anticipated during the life of the project. Flexible pavement systems in this south Florida geographic area, typically consist of an asphaltic concrete wearing course, limerock base course and a stabilized pavement subgrade. Based on our preliminary findings and analysis and experience in the area, the typical pavement section

thicknesses shown in the following Table 34, are commonly used by local pavement design engineers.

TABLE 34: TYPICAL FLEXIBLE AND RIGID PAVEMENT DESIGN

TYPE OF PAVEMENT	LAYER	MATERIAL DESCRIPTION	LAYER THICKNESS		
			LIGHT DUTY	MEDIUM DUTY	HEAVY DUTY
Flexible	Asphaltic concrete	Florida DOT Asphalt Type S	1.5	1.75	2.0
	Base course	Crushed limerock with minimum LBR of 100, compacted to 98% of the Modified Proctor maximum dry density	6.0	7.0	8.0
	Stabilized subbase	Stabilized sub-base fill with a minimum LBR of 40 compacted to 95% of the Modified Proctor maximum dry density	12.0	12.0	12.0
Rigid	Concrete	Florida DOT Portland Cement Concrete	6.0	7.0	8.0
	Compacted subgrade	Natural in place soils compacted to at least 95 percent of the materials Modified Proctor maximum dry density	12.0	12.0	12.0

Comparison of the above typical design thicknesses with asphalt pavement measurements provided in Tables 1 and 2 indicates that most of the asphalt cores measured thickness would comply with or exceed the above typical design thicknesses for light duty pavements. The asphalt cores that do not comply with the above typical asphalt design thickness for light duty asphalt pavement were encountered at borings D-4, DR-5, E-1, P-4, R-4, R-8, and V-5. We suspect that the substandard asphalt thicknesses were likely adequate for the design traffic loading conditions at the time of the initial roadway design and construction. For the asphalt thickness that exceed the above recommended thicknesses, we suspect that asphalt mill and resurfacing overlays were installed over the original asphalt to repair distress.

From a base thickness perspective, thirty-eight (38) of the sixty-eight (68) base course thickness measurements meet or exceeds a base course thicknesses of 6 inches and are considered acceptable for light duty pavement design and use in light duty trafficked areas. However, given the thickness of the asphalt cores and a general rule of thumb that one inch of asphalt is equivalent to two inches of compacted limerock base, the combination of both of the measured base and asphalt material thicknesses would appear to provide a suitable pavement section thickness in most areas such that a pavement mill and re-surface program may prove cost effective. Further analyses of the pavement section will need to be provided by a civil pavement design engineer experienced with such evaluations. We suspect that the substandard base course thicknesses were adequate for the traffic loading during the initial roadway construction.

From a subgrade perspective, in our opinion the nature and composition of the subgrade soils at the location of the borings performed for this study would essentially be in compliance with typical pavement construction designs for light duty pavement section design.

Any new or re-constituted base course material should consist of crushed limestone having a minimum Limerock Bearing Ratio (LBR) of 100. Base materials should meet the requirements presented in the latest revisions of the Florida Department of Transportation "Specifications for Road and Bridge Construction", Section 911 (limestone). The base course should be compacted to at least ninety-eight (98) percent of its maximum dry modified proctor density (AASHTO T 180).

We recommend that any new pavement subgrade be stabilized to a depth of twelve (12) inches to achieve a minimum LBR of 40. If necessary, this LBR value can be achieved by blending base material (limerock) with the existing sandy subgrade soils. The required mixing ratio should be determined by laboratory testing. The stabilized subgrade should be compacted to at least ninety-eight (98) percent of its maximum dry as determined per ASTM D 1557, the Modified Proctor Method.

A Portland concrete pavement thickness in the range of eight (8) inches would also be recommended for the project if a rigid pavement is to be employed (the thickness would depend on specific pavement use). Any concrete pavement should be reinforced to withstand the anticipated traffic loadings and jointed to reduce the chances for rigid pavement crack development. The minimum rigid pavement thickness recommended above is based upon concrete with an unconfined compressive strength of at least 3,000 psi and a modulus of rupture of at least 450 psi. It should be noted that this recommendation is intended for the street pavement and not for concrete driveway aprons or sidewalks.

Actual pavement section thickness should be determined by the Design Civil Engineer based on traffic loads, volume, and the Owner's design life requirements. The above sections represent minimum thickness representative of typical local construction practices and, as such, periodic maintenance should be anticipated. All pavement materials and construction procedures should conform to FDOT, American Concrete Institute (ACI), and/or appropriate City or County requirements for roadway pavement construction.

7.4.1 PERVIOUS PAVEMENT DESIGN CONSIDERATIONS

The soil borings and laboratory test results indicate that most of the existing sands encountered are suitable for subgrade use in pervious pavement areas, as defined by the South Florida Water Management District (SFWMD). The sand subgrade soils should be compacted to a maximum density of 95% of the maximum dry density as determined by ASTM D1557, or AASHTO T180, to a minimum depth of 24 inches. As per the SFWMD specifications, subgrade stabilization is not required for sand type of soils (SP). If additional fill material is required to bring the subgrade to final elevation, it should be hydraulically clean (maximum of 10% silt or clay), and free of deleterious materials.

For redevelopment projects where the existing pavement section is to be removed; the compacted base should also be removed and the underlying subgrade soils scarified to a minimum depth of 20 inches. The subgrade should be re-graded and filled with clean (hydraulically clean and free of deleterious material) soils. The clean soils should be placed in 8-inch maximum layers and compacted to a maximum density of 95% of the Modified Proctor density within 3% of the optimum moisture content (ASTM D-1557, or AASHTO T180).

It is recommended by SFWMD that the Seasonal High Groundwater Table (SHGWT) elevation be greater than 24 inches below the bottom of any pervious pavement system. The pervious pavement system is suggested to include an underlying storage reservoir consisting of pea rock, #57 stone, etc. If utilized, the underlying storage reservoir should be wrapped with geo-fabric. SFWMD recommends that the underlying storage reservoir layer be no more than 36 inches thick. Runoff from adjacent landscaped areas should not be directed onto any pervious pavement system unless the adjacent landscape areas that drain onto the pervious pavement, will not increase sediment, silt, sand, or organic debris deposition on the pavement that increases the potential for clogging of the pervious pavement section. The site design should include measures to reduce the likelihood of silts and sands from entering and plugging the pervious pavement system void spaces.

Periodic vacuum sweeping of pervious pavements can be used and is recommended. For areas where wind transported soil (i.e. near sand dunes or other coastal areas), or other conditions where excessive soil or other material deposition can occur, vacuum sweeping should be utilized a minimum of twice a year.

7.5 CLEARING AND GRUBBING

Clearing and grubbing may be required in some of the proposed construction areas. Clearing and grubbing where required should include the complete removal and disposal of surficial grasses, associated root systems, topsoil, rubbish, debris, any demolition material/pavement and all other obstructions resting on or protruding through the surface of the existing ground and the surface of excavated areas.

7.6 UNDERGROUND UTILITIES

Existing underground utilities and structures are likely to be present in the proposed construction areas. These utilities need to be properly identified, and located and/or relocated as necessary to construct the new components of the project. The excavation bottoms of any relocated or replacement utilities should be cleaned of any undesirable materials prior to placing any engineered backfill.

Site preparation, excavation, and backfilling for new utilities or re-aligned utilities should follow all of the applicable recommendations of this report.

7.7 EXCAVATIONS

The project construction Contractor is solely responsible for making any utility or other excavations in a safe manner and to provide appropriate measures to retain side slopes to ensure that persons working in or near the excavation are protected. Any structural retaining walls shall be designed and sealed by a structural engineer registered in the State of Florida.

Excavations shall comply with Occupational Health and Safety Administration (OHSA) stipulations for Trench Excavation Safety including all temporary design and safety requirements. The soils encountered in the majority borings outside of the Victoria Park and Southeast Isles area, generally consist of relatively clean sands. OSHA 29 CFR part 1926 (Subpart P, Excavations) defines such soils as Type C soils. As such, the granular deposits encountered in the borings are readily capable of being excavated to a depth of several feet with standard backhoe construction equipment. As such, temporary side slopes in fully dewatered excavations could be made at a 1½H:1V inclination or flatter. Adjustment to this inclination and/or the use of sheeting, shoring or sliding trench boxes should be evaluated by the Contractor if other soil strata are encountered.

It is noted that in the Victoria Park, River Oaks, and Southeast Isles areas, that significant organic deposits were encountered in the borings performed for these areas. Correspondingly, utilities installed in these areas are likely to encounter highly organic material during the utility excavation and installation process requiring cleaning or removing of the organic deposits prior to placing any engineered backfill as mentioned in section 7.10.

7.8 DEWATERING

At the time of the field exploration (i.e. September 2017, October 2017 & July 2018), the groundwater encountered varied between 0.5 to 6.5 feet below the existing ground surface. In-the-dry construction of the underground utilities may require groundwater lowering and control of groundwater seepage depending on the design installation depths. Dewatering of the excavations may necessitate the use of sumps, wells, wellpoints or combinations thereof. Control of groundwater should be accomplished in a manner that preserves the integrity of the in-situ soils and limestones and does not cause instability of the excavation sidewalls. The dewatering system employed should be capable of maintaining a pre-drained surface a minimum of 24 inches below the excavation bottoms. It is important to note that dewatering measures should be controlled in areas with organic soils so that the groundwater is not lowered beneath any nearby structure supported on grade. Dewatering of the organic soils will cause an increase in unit weight of the soils and a reduction in volume, resulting in primary consolidation settlement.

7.9 PIPE BEDDING

Most of the sands encountered in the borings are expected to provide good support for utility pipelines without the need for bedding when the invert elevations are at least 24 inches above the groundwater level (natural or pre-drained by dewatering). In areas where organics or other deleterious materials are encountered at or within 2 feet below the pipe invert, such soils shall be

considered compressible and unsuitable for pipe support. These soils should be over-excavated and replaced with compacted clean sand or FDOT No. 57 coarse aggregate or an approved equivalent. If FDOT No. 57 stone or an approved equivalent is utilized, such stone material will need to be encapsulated and/or covered with a geosynthetic fabric especially beneath pavement areas. Such fabric material is needed to prevent granular excavation soils and trench backfill from penetrating/settling into the void volumes of the open stone resulting in loss of ground and eventual settlement of the ground surface above the piping.

The bedding surface should be uniformly compacted to a density of not less than 95 percent of the maximum dry density in accordance with ASTM D 1557, the Modified Proctor Method.

7.10 TRENCH BACKFILL AND COMPACTION

Soils used to backfill utility excavations should consist of clean sands having no materials larger than one inch in size, not more than ten (10) percent passing the U.S. Standard No. 200 sieve, and not more than three (3) percent organics or other deleterious materials by weight. Some of the subsurface soils encountered at these neighborhood sites appear to meet these criteria and are suitable for reuse as backfill once inspected, tested and approved.

Granular backfill should be placed at a moisture content within three (3) percent of its ASTM D 1557 determined optimum moisture and in level lifts whose thickness does not exceed eight (8) inches. Each fill lift should be stable, unyielding and uniformly compacted to at least 95 percent of the maximum dry density in accordance with ASTM D 1557, the Modified Proctor Method. We recommend the use of only relatively light, hand-held compaction equipment in the densification operations around utilities to limit the potential damage to the pipelines and buried structures.

7.11 SITE PREPARATION

The site preparation for any roadway modifications and for new structures should consist of necessary clearing and grubbing in general accordance with Section 110 of the FDOT Standard Specifications for Road and Bridge Construction or any similar City/County standard design criteria applicable to the project. Any topsoil or other deleterious material encountered in proposed construction areas, will need to be stripped, removed and replaced with embankment, roadway or structural fill, as applicable. If buried organic soils, debris or other unsuitable materials are encountered during the construction, which are or are not disclosed by the borings, they should be removed and replaced with a backfill material as described in following sections.

The Stratum 1 soils are select granular soils and are satisfactory to use in the subgrade and embankment when utilized in general accordance with FDOT Standard Index 505 or any similar City/County standard design criteria applicable to the project. Soils exposed at the stripped grades will require moisture conditioning to near the optimum moisture content prior to initiating the densification operations. In residential areas, the use of such heavy vibratory compaction equipment may prove problematic and disruptive or even damaging to existing/adjacent home

owner's properties. In such cases, the compaction will need to be performed and achieved with lighter weight, less vibration generation capable equipment such as walk behind (e.g. Whacker) ground pounder or small vibratory rolling equipment.

Each section of the stripped grade should be subjected to multiple, overlapping coverages of the compactor as it operates at a travel speed of no more than 1.5 miles per hour (normal walking speed). Compaction should be continued until no further settlement can be visually discerned at the ground surface. The densified areas should include a 3-foot perimeter along proposed new pavement areas.

Density control should be exercised for the exposed subgrade for any roadway repairs or beneath new structures. Soils in this interval should be compacted to not less than 95 percent of the maximum dry density in accordance with ASTM D 1557, the Modified Proctor Method. Subgrade soils that noticeably pump or deflect under the weight of the passing compaction equipment, could indicate the presence of soft, weak, overly saturated soils or compressible and loose soil zones existing in the near surface subgrade within the depth of influence of the roller. In such cases, those areas should be remedied by appropriate means to be determined by the inspecting field representative in consultation with representatives of the design team.

7.12 SELECT FILL COMPOSITION, PLACEMENT AND COMPACTION

Site structural and pavement embankment fill and backfill required for construction should consist of clean, granular materials that are free of debris, cinders, combustibles and organic matter. The fines content (i.e., material passing U.S. Standard No. 200 sieve) should not be more than ten (10) percent by weight, no particle sizes larger than one (1) inches in any direction and the organic content should not exceed three (3) percent by dry weight. The on-site sand soils appear to meet the above criteria and are suitable for use as structural fill and backfill material. Organic laidened soils encountered in several of the borings soils beneath the upper sand layer such as those encountered in the River Oaks, Victoria Park and Southeast Isles area, will not be suitable for use of Select Fill.

The granular fill should be placed at a moisture content within three (3) percent of its Modified Proctor (ASTM D 1557) determined optimum in level lifts whose loose thickness does not exceed twelve (12) inches. In areas where heavy equipment cannot be operated for compaction, the fill should be placed in six (6) inch thick level lifts. Each fill lift should be stable, unyielding and uniformly compacted to 95 percent of the ASTM D 1557 maximum dry density, as verified by the designated site construction inspecting representative.

Select fill soils will require moisture conditioning to near the optimum moisture content prior to initiating the densification operations. Similar to the subgrade preparation, the fill densification should normally be accomplished using a self-propelled vibratory compactor which imparts a dynamic drum force of not less than 44,000 pounds. However, in residential areas, the use of such heavy vibratory compaction equipment may prove problematic and disruptive or even damaging to existing/adjacent home owner's properties. In such cases, the compaction will need to be

performed and achieved with lighter weight, less vibration generation capable equipment such as walk behind (e.g. Whacker) ground pounder or small vibratory rolling equipment.

7.13 OBSERVATION AND TESTING

It is recommended that a geotechnical engineer be retained to provide soil engineering inspection services during the construction excavation phase of the project. This is to observe compliance with the design concept, specifications and recommendations, and to allow design changes in the event subsurface conditions differ from those anticipated. In addition, an inspection and testing representative of a geotechnical engineer should be present to provide monitoring and testing of both fill and concrete placement during the construction phase of the project.

8.0 EXISTING UTILITIES

Existing utilities could potentially be present within or near the proposed seawalls. Precautionary measures should be taken to identify and locate any such systems impacted by the planned construction. Where encountered, mitigative design details should be provided accordingly. Consideration should be given as to what kind of utilities are present (i.e. nature and composition), and what the utility or other owner's guidelines and specifications are regarding their re-location etc. Utility locates should be in general accordance with the FDOT Plans Preparation Manual, Section 5.3 – Utility Locates.

9.0 PROTECTION OF EXISTING STRUCTURES

Ground vibrations induced upon adjacent structures, primarily by soil compaction equipment or any other construction activities such as pile driving, should be monitored to assure that they do not reach levels which prove damaging to any adjacent/nearby structures. Vibration Monitoring should be performed in general accordance with "Section 108, Protection of Existing Structures" of the current FDOT Standard Specifications for Road and Bridge Construction or other similar local City/County regulations or ordinances.

Vibration levels on adjacent facilities should generally be maintained below a 0.25 inches/second peak particle velocity level however, more restrictive/lessor levels as low as 0.10 inches/second may be specified for highly sensitive residential or historical areas. The construction Contractor will need to inventory and provide a pre-construction inspection of adjacent structures and determine suitable vibration monitoring programs and impact limits for their construction activities. Such monitoring will be particularly important for the Victoria Park and Southeast Isles area as the ground conditions will have a higher tendency and capability to transmit vibrations horizontally from the construction activities.

It is noted that the residential homes in the Victoria Park and Southeast Isles area are likely founded on short driven piles installed to sound bearing conditions beneath the buried organics.

Vibrations in the lower soil/rock layers beneath the organics, from construction activities such as sheet piling installation, will have the potential to be transmitted into the residences via the piling foundations installed for the structures. Typically, for sheet piling and driven pile installations, a maximum allowable peak particle velocity of 0.10 inches/second has been used in the construction specifications for areas of similar natured residential and commercial structures that exist in this project area.

10.0 LIMITATIONS

This report is intended for geotechnical purposes only, and not to document or detect the presence, or absence of any environmental conditions at the site, or to perform an environmental assessment of the site.

The analysis and recommendations presented in this report are based upon our interpretation of the subsurface information revealed by the test borings. The report does not reflect variations in subsurface conditions that may exist between or beyond these borings. Variations in soil and groundwater conditions should be expected, the nature and extent of which might not become evident until construction is undertaken. If variations are encountered, and/or the scope of the project altered, we should be consulted for additional recommendations.

RADISE International warrants that the professional services performed and presented in this report are prepared for Hazen and Sawyer, and are based upon typical standard of care recognized principles and practices in the discipline of geotechnical engineering and hydrogeology at this place and point in time, for this project site. No other warranties are expressed or implied.

-oOo-

RADISE appreciates the opportunity to be of service to you. Please feel free to contact us at 561-841-0103 if you have any questions or comments regarding this report.

Respectfully submitted
RADISE International, L.C.

REVISIONS							Names	Dates
Date.	By	Descriptions	Date.	By	Descriptions	Drawn by	KA	11/16/17
						Checked by	AB	11/16/17
						Designed by		
						Checked by		
						Approved by		

RADISE

LICENSE NO. - 8901

ENGINEER OF RECORD
RADISE International
4152 West Blue Heron Boulevard, Suite 1114
Riviera Beach, Florida. 33404
TEL 561-841-0103 FAX 561-841-0104
URL : http:// www.radise.net

CITY OF FORT LAUDERDALE
PUBLIC WORKS DEPARTMENT

COUNTY	CLIENT
BROWARD	HAZEN AND SAWYER

SCALE: VERTICAL N.T.S.

SCALE: HORIZONTAL N.T.S.

SHEET TITLE: VICINITY MAP

PROJECT NAME: STORMWATER MASTER PLAN MODELING AND DESIGN IMPLEMENTATION

SHEET NO. 1

RADISE PROJECT NO: 170901

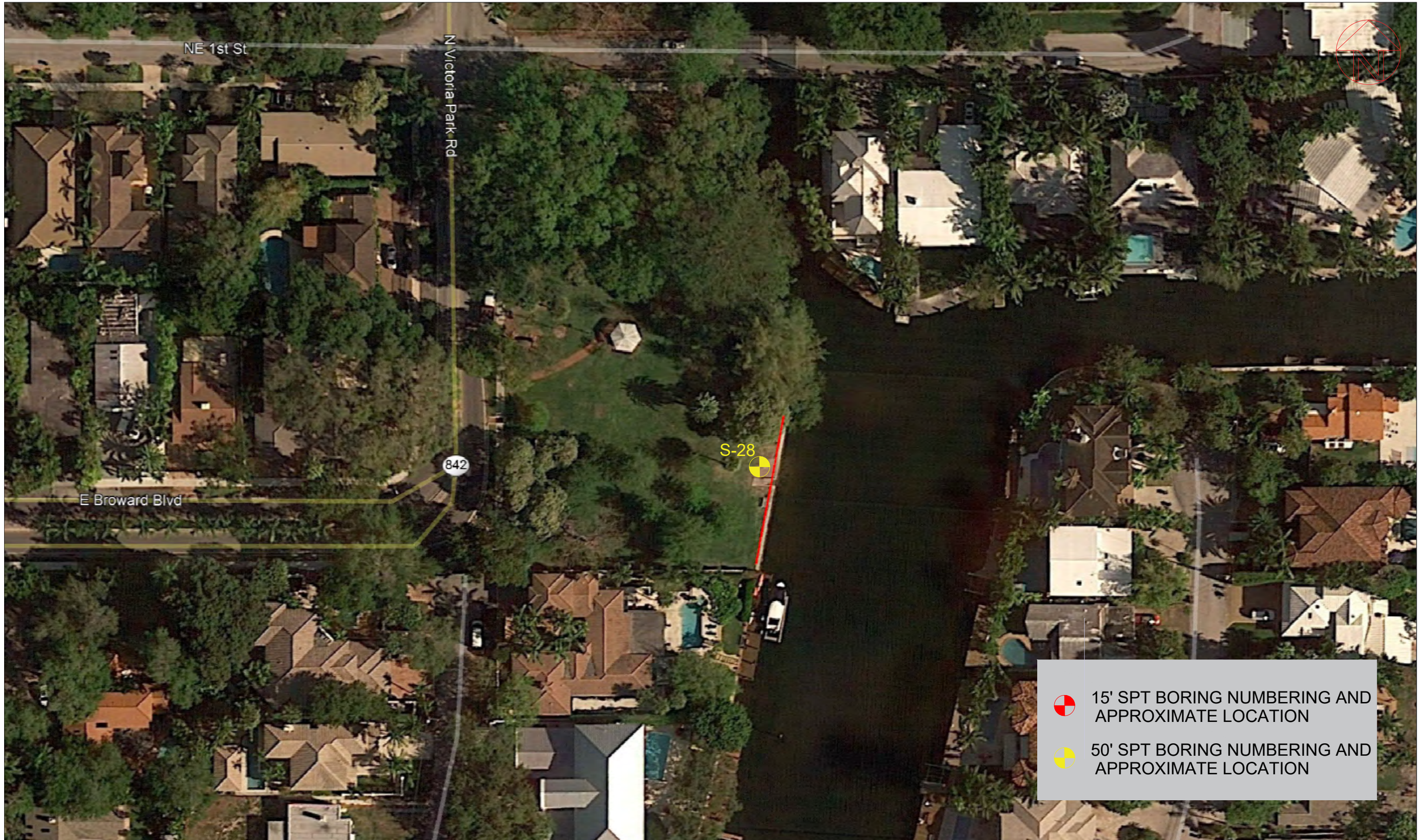

REVISIONS					
Date.	By	Descriptions	Date.	By	Descriptions

	Names	Dates
Drawn by	KA	11/16/17
Checked by	AB	11/16/17
Designed by	KA	11/16/17
Checked by	AB	11/16/17
Approved by	AN	07/24/18

RADISE
Infrastructure Engineers & Software Developers
LICENSE NO. - 8901

ENGINEER OF RECORD
RADISE International
4152 West Blue Heron Boulevard, Suite 1114
Riviera Beach, Florida. 33404
TEL 561-841-0103 FAX 561-841-0104
URL : http:// www.radise.net

CITY OF FORT LAUDERDALE
PUBLIC WORKS DEPARTMENT

COUNTY	CLIENT
BROWARD	HAZEN AND SAWYER

SCALE: VERTICAL N.T.S.
SCALE: HORIZONTAL N.T.S.

SHEET TITLE: BORING LOCATION PLAN (SEAWALL 9)

PROJECT NAME: STORMWATER MASTER PLAN MODELING AND DESIGN IMPLEMENTATION

SHEET NO. 2A

RADISE PROJECT NO: 170901

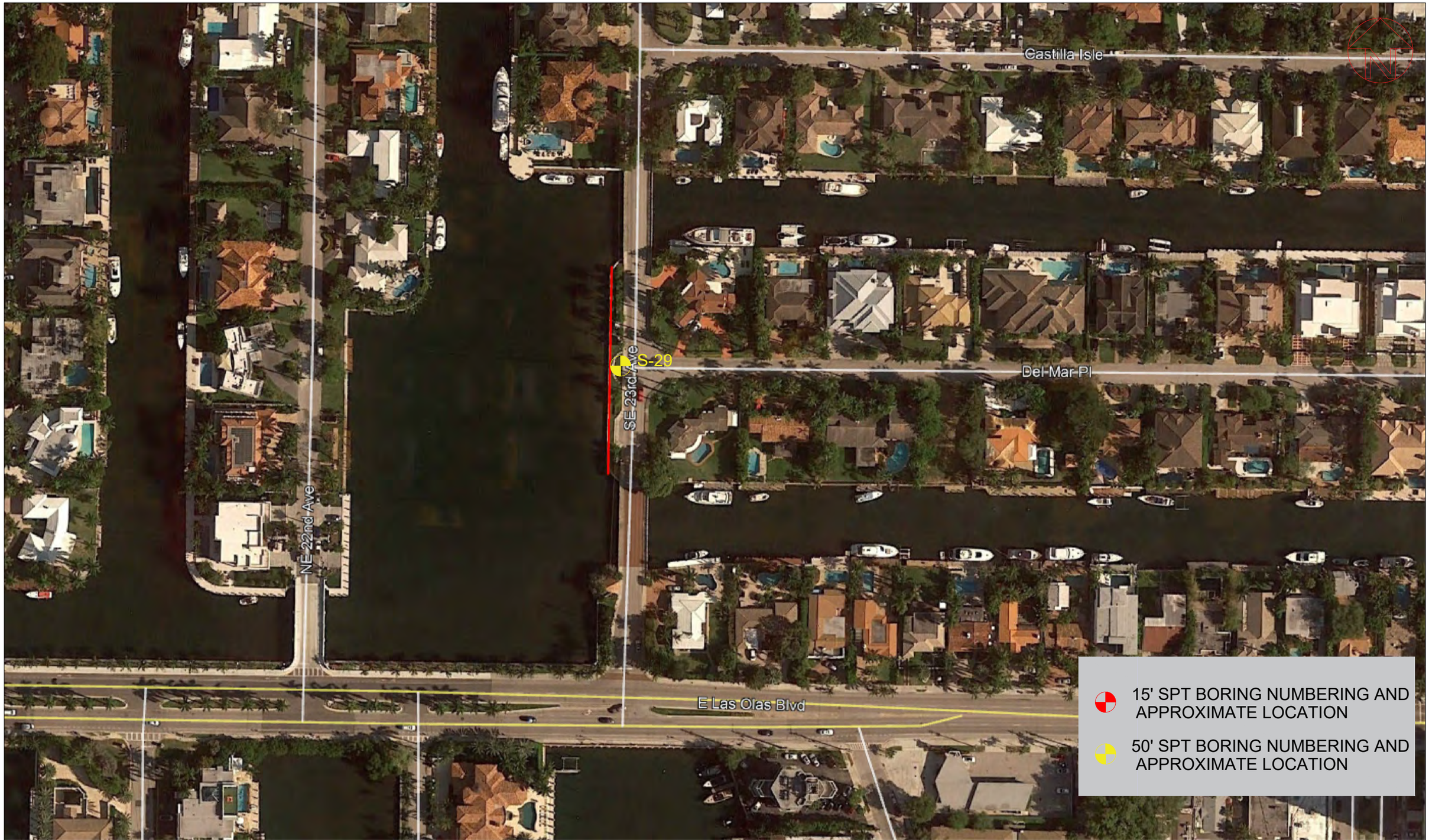

REVISIONS							Names	Dates
Date.	By	Descriptions	Date.	By	Descriptions	Drawn by	KA	11/16/17
						Checked by	AB	11/16/17
						Designed by	KA	11/16/17
						Checked by	AB	11/16/17
						Approved by	AN	07/24/18

RADISE

LICENSE NO. - 8901

ENGINEER OF RECORD
RADISE International
4152 West Blue Heron Boulevard, Suite 1114
Riviera Beach, Florida. 33404
TEL 561-841-0103 FAX 561-841-0104
URL : http:// www.radise.net

CITY OF FORT LAUDERDALE
PUBLIC WORKS DEPARTMENT

COUNTY	CLIENT
BROWARD	HAZEN AND SAWYER

SCALE: VERTICAL N.T.S.

SCALE: HORIZONTAL N.T.S.

SHEET TITLE: BORING LOCATION PLAN (SEAWALL 10)

PROJECT NAME: STORMWATER MASTER PLAN MODELING AND DESIGN IMPLEMENTATION

SHEET NO. 2B

RADISE PROJECT NO: 170901

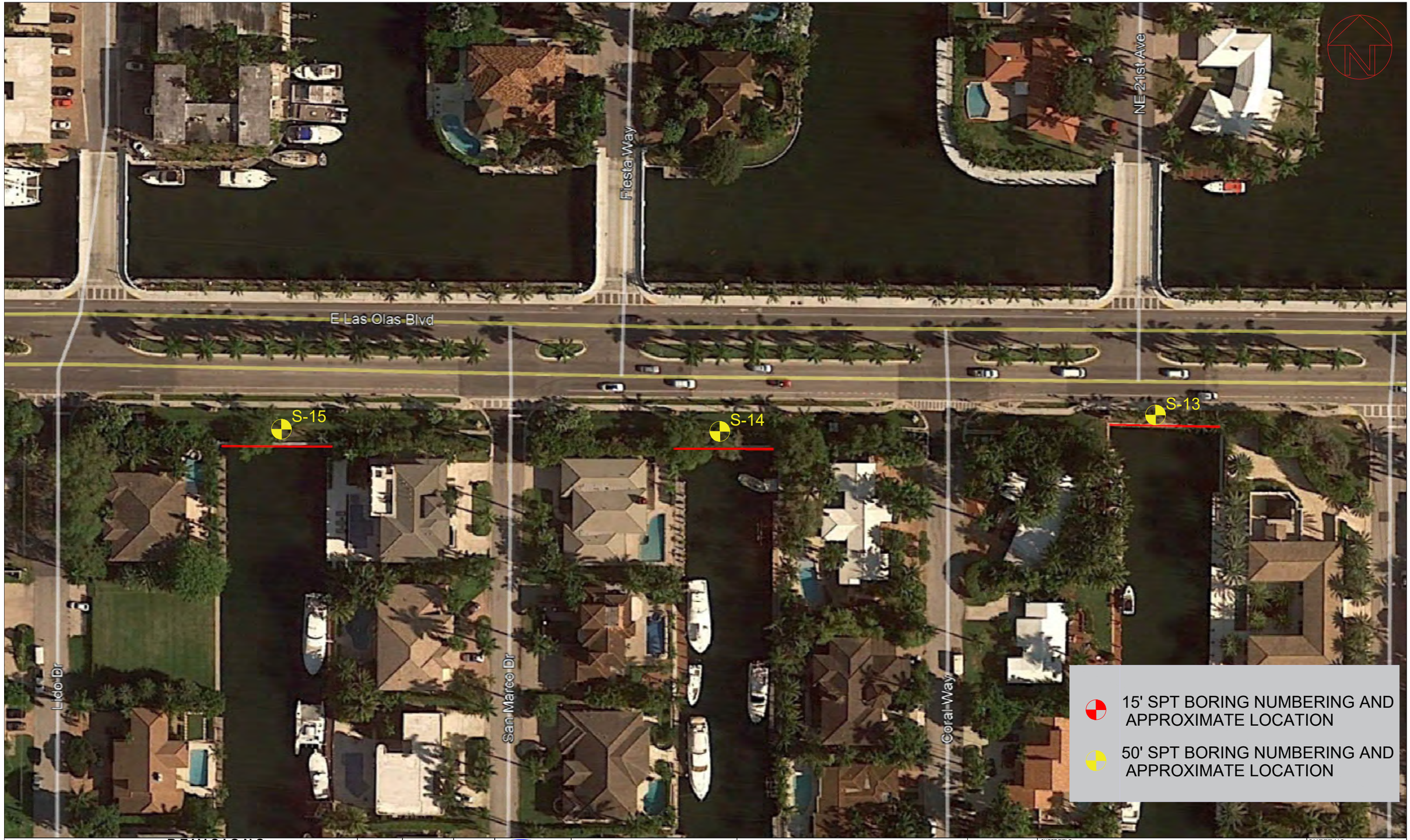

REVISIONS					
Date.	By	Descriptions	Date.	By	Descriptions

	Names	Dates
Drawn by	KA	11/16/17
Checked by	AB	11/16/17
Designed by	KA	11/16/17
Checked by	AB	11/16/17
Approved by	AN	07/24/18

RADISE
Infrastructure Engineers & Software Developers
LICENSE NO. - 8901

ENGINEER OF RECORD
RADISE International
4152 West Blue Heron Boulevard, Suite 1114
Riviera Beach, Florida. 33404
TEL 561-841-0103 FAX 561-841-0104
URL : http:// www.radise.net

CITY OF FORT LAUDERDALE
PUBLIC WORKS DEPARTMENT

COUNTY	CLIENT
BROWARD	HAZEN AND SAWYER

SCALE: VERTICAL N.T.S.
SCALE: HORIZONTAL N.T.S.

SHEET TITLE: BORING LOCATION PLAN (SEAWALL 12, 13 AND 14)

PROJECT NAME: STORMWATER MASTER PLAN MODELING AND DESIGN IMPLEMENTATION

SHEET NO. 2C

RADISE PROJECT NO: 170901

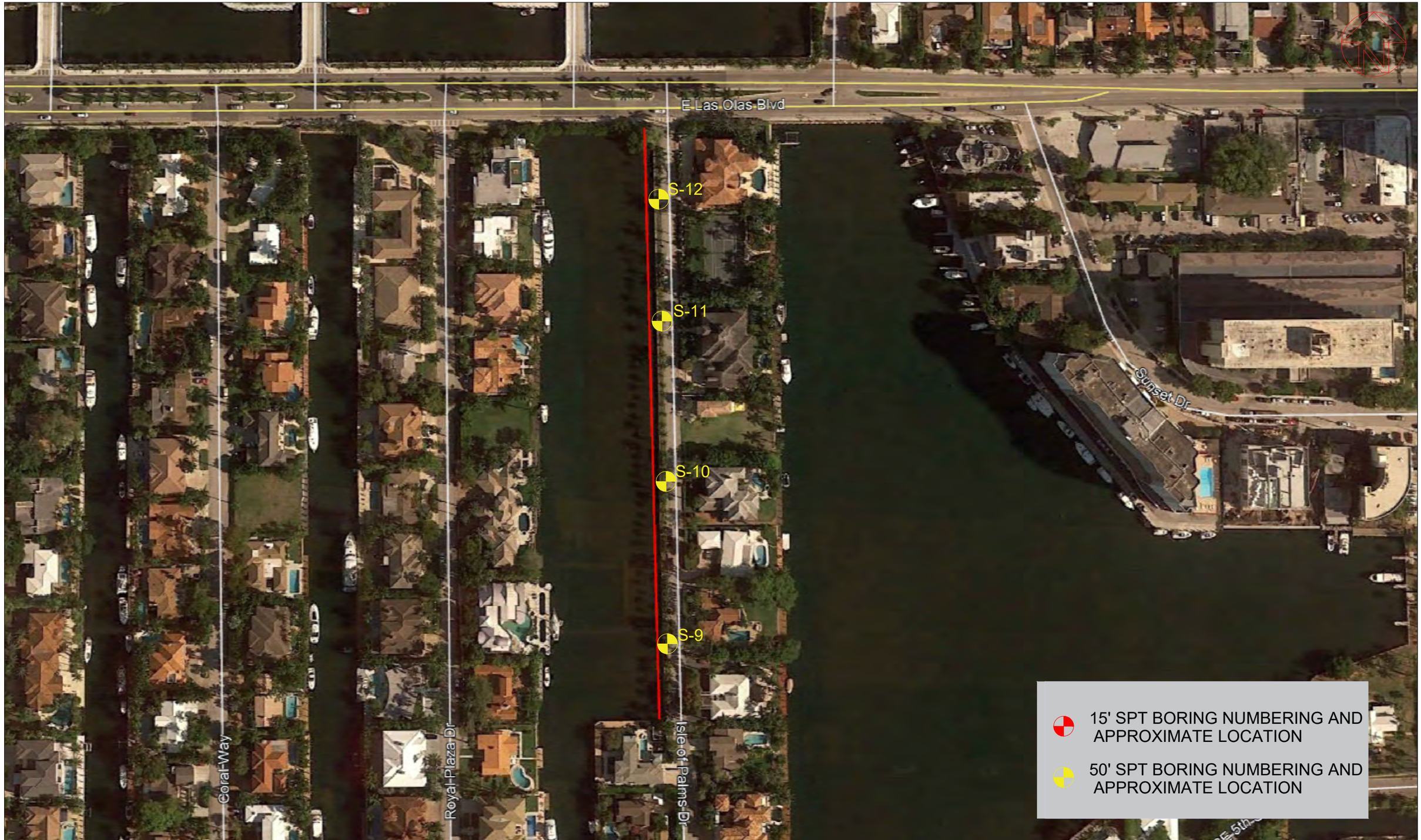

REVISIONS					
Date.	By	Descriptions	Date.	By	Descriptions

	Names	Dates
Drawn by	KA	11/16/17
Checked by	AB	11/16/17
Designed by	KA	11/16/17
Checked by	AB	11/16/17
Approved by	AN	07/24/18

RADISE
Infrastructure Engineers & Software Developers
LICENSE NO. - 8901

ENGINEER OF RECORD
RADISE International
4152 West Blue Heron Boulevard, Suite 1114
Riviera Beach, Florida. 33404
TEL 561-841-0103 FAX 561-841-0104
URL : http:// www.radise.net

CITY OF FORT LAUDERDALE
PUBLIC WORKS DEPARTMENT

COUNTY	CLIENT
BROWARD	HAZEN AND SAWYER

SCALE: VERTICAL N.T.S.
SCALE: HORIZONTAL N.T.S.

SHEET TITLE: BORING LOCATION PLAN (SEAWALL 15)

PROJECT NAME: STORMWATER MASTER PLAN MODELING AND DESIGN IMPLEMENTATION

SHEET NO. 2D

RADISE PROJECT NO: 170901

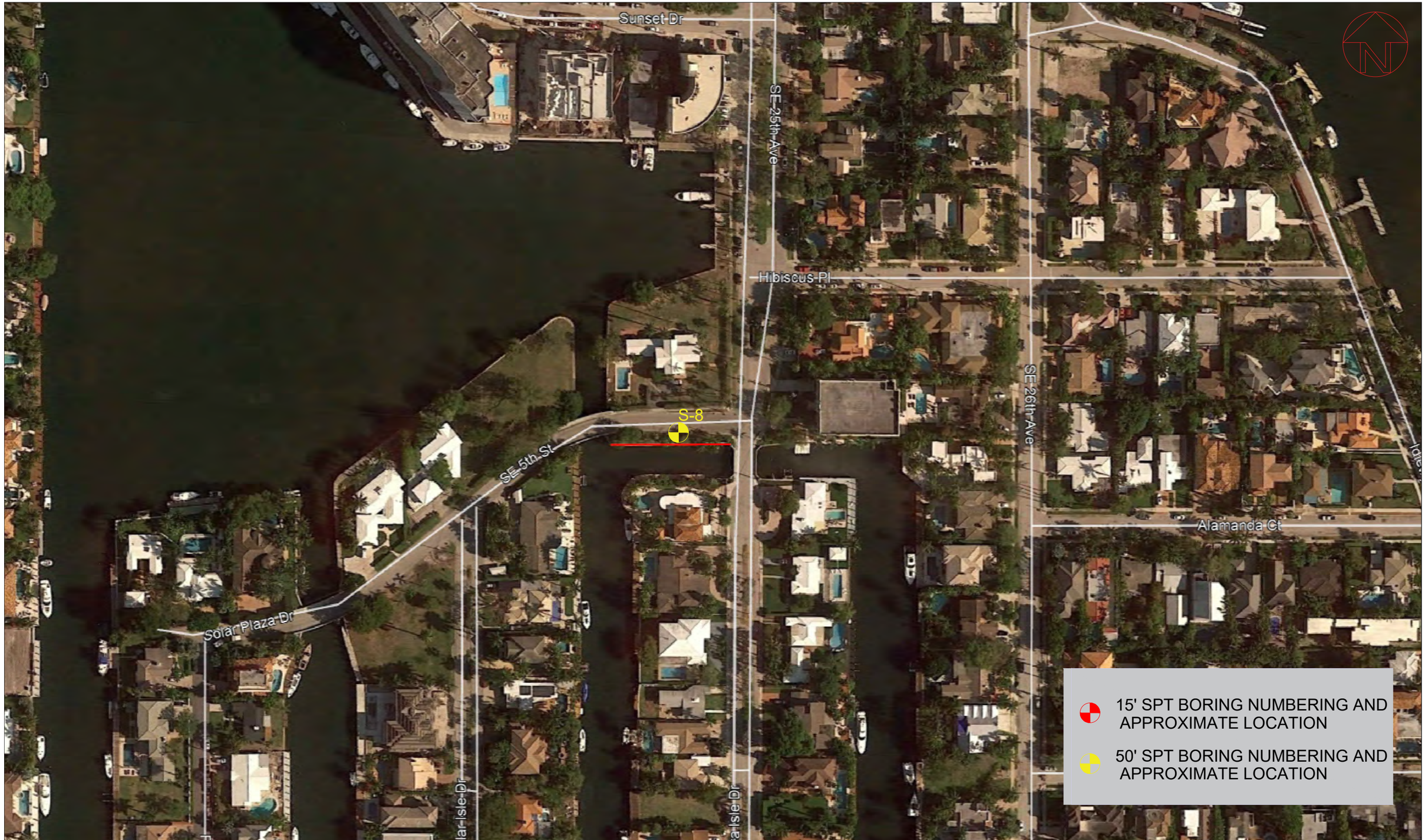

REVISIONS					
Date.	By	Descriptions	Date.	By	Descriptions

	Names	Dates
Drawn by	KA	11/16/17
Checked by	AB	11/16/17
Designed by	KA	11/16/17
Checked by	AB	11/16/17
Approved by	AN	07/24/18

RADISE
Infrastructure Engineers & Software Developers
LICENSE NO. - 8901

ENGINEER OF RECORD
RADISE International
4152 West Blue Heron Boulevard, Suite 1114
Riviera Beach, Florida. 33404
TEL 561-841-0103 FAX 561-841-0104
URL : http:// www.radise.net

CITY OF FORT LAUDERDALE
PUBLIC WORKS DEPARTMENT

COUNTY	CLIENT
BROWARD	HAZEN AND SAWYER

SCALE: VERTICAL N.T.S.
SCALE: HORIZONTAL N.T.S.

SHEET TITLE: BORING LOCATION PLAN (SEAWALL 17)

PROJECT NAME: STORMWATER MASTER PLAN MODELING AND DESIGN IMPLEMENTATION

SHEET NO. 2E

RADISE PROJECT NO: 170901

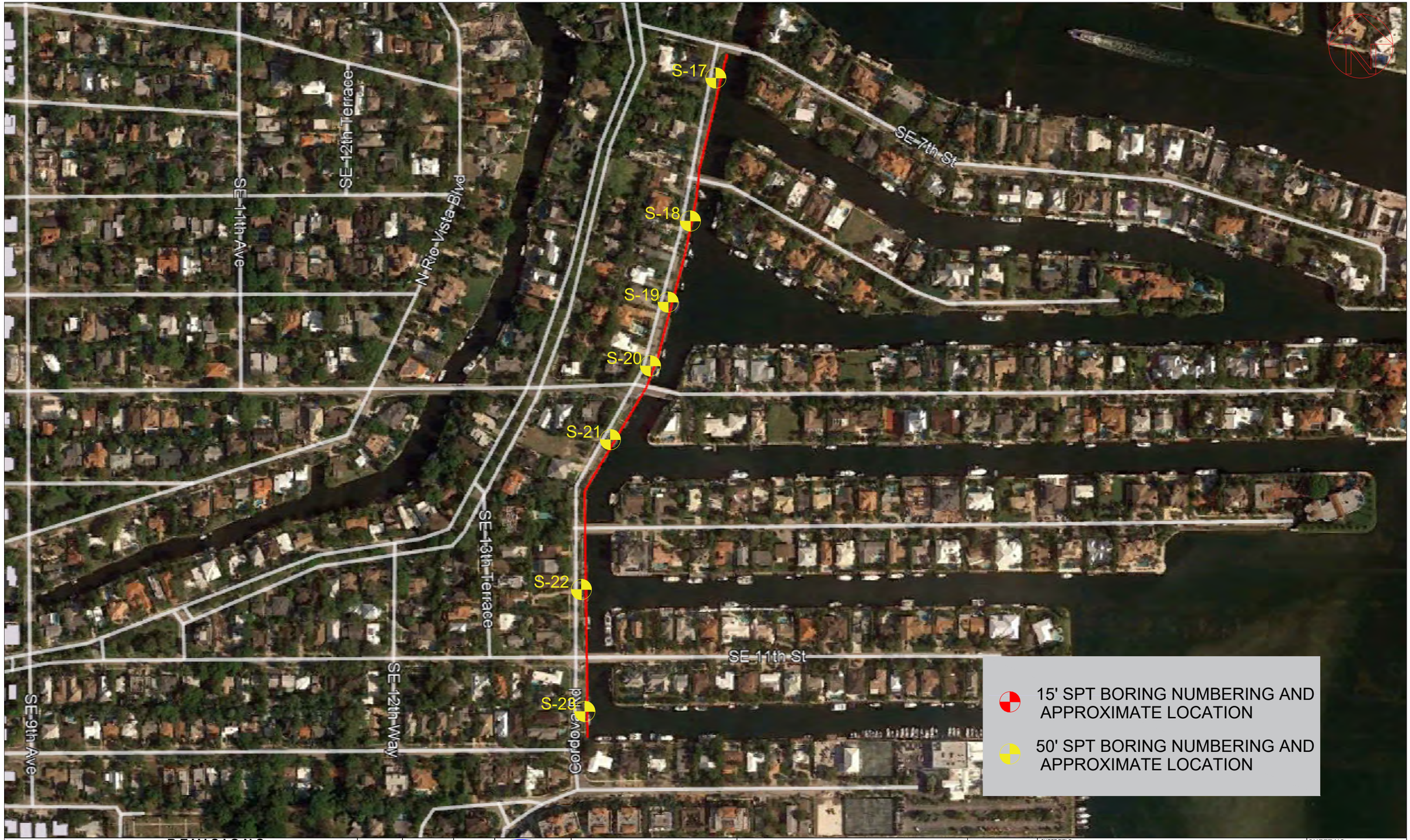

REVISIONS							Names	Dates
Date.	By	Descriptions	Date.	By	Descriptions	Drawn by	KA	11/16/17
						Checked by	AB	11/16/17
						Designed by	KA	11/16/17
						Checked by	AB	11/16/17
						Approved by	AN	07/24/18

RADISE
Infrastructure Engineers & Software Developers
LICENSE NO. - 8901

ENGINEER OF RECORD
RADISE International
4152 West Blue Heron Boulevard, Suite 1114
Riviera Beach, Florida. 33404
TEL 561-841-0103 FAX 561-841-0104
URL : http:// www.radise.net

CITY OF FORT LAUDERDALE
PUBLIC WORKS DEPARTMENT

COUNTY	CLIENT
BROWARD	HAZEN AND SAWYER

SCALE: VERTICAL N.T.S.
SCALE: HORIZONTAL N.T.S.

SHEET TITLE: BORING LOCATION PLAN (SEAWALL 29)

PROJECT NAME: STORMWATER MASTER PLAN MODELING AND DESIGN IMPLEMENTATION

SHEET NO. 2F

RADISE PROJECT NO: 170901

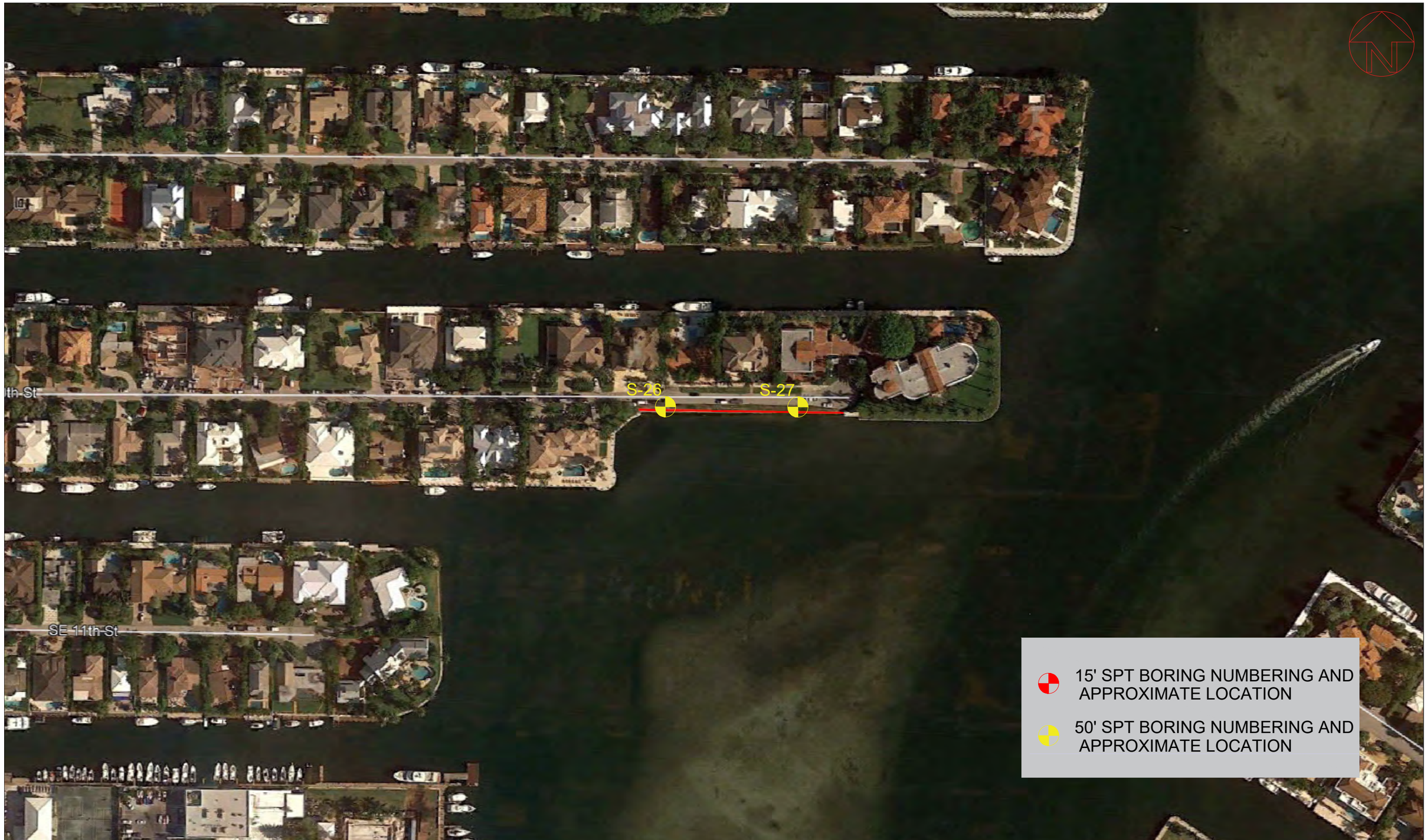

REVISIONS							Names	Dates
Date.	By	Descriptions	Date.	By	Descriptions	Drawn by	KA	11/16/17
						Checked by	AB	11/16/17
						Designed by	KA	11/16/17
						Checked by	AB	11/16/17
						Approved by	AN	07/24/18

RADISE
Infrastructure Engineers & Software Developers
LICENSE NO. - 8901

ENGINEER OF RECORD
RADISE International
4152 West Blue Heron Boulevard, Suite 1114
Riviera Beach, Florida. 33404
TEL 561-841-0103 FAX 561-841-0104
URL : http:// www.radise.net

CITY OF FORT LAUDERDALE
PUBLIC WORKS DEPARTMENT

COUNTY	CLIENT
BROWARD	HAZEN AND SAWYER

SCALE: VERTICAL N.T.S.
SCALE: HORIZONTAL N.T.S.

SHEET TITLE: BORING LOCATION PLAN (SEAWALL 30)

PROJECT NAME: STORMWATER MASTER PLAN MODELING AND DESIGN IMPLEMENTATION

SHEET NO. 2G

RADISE PROJECT NO: 170901

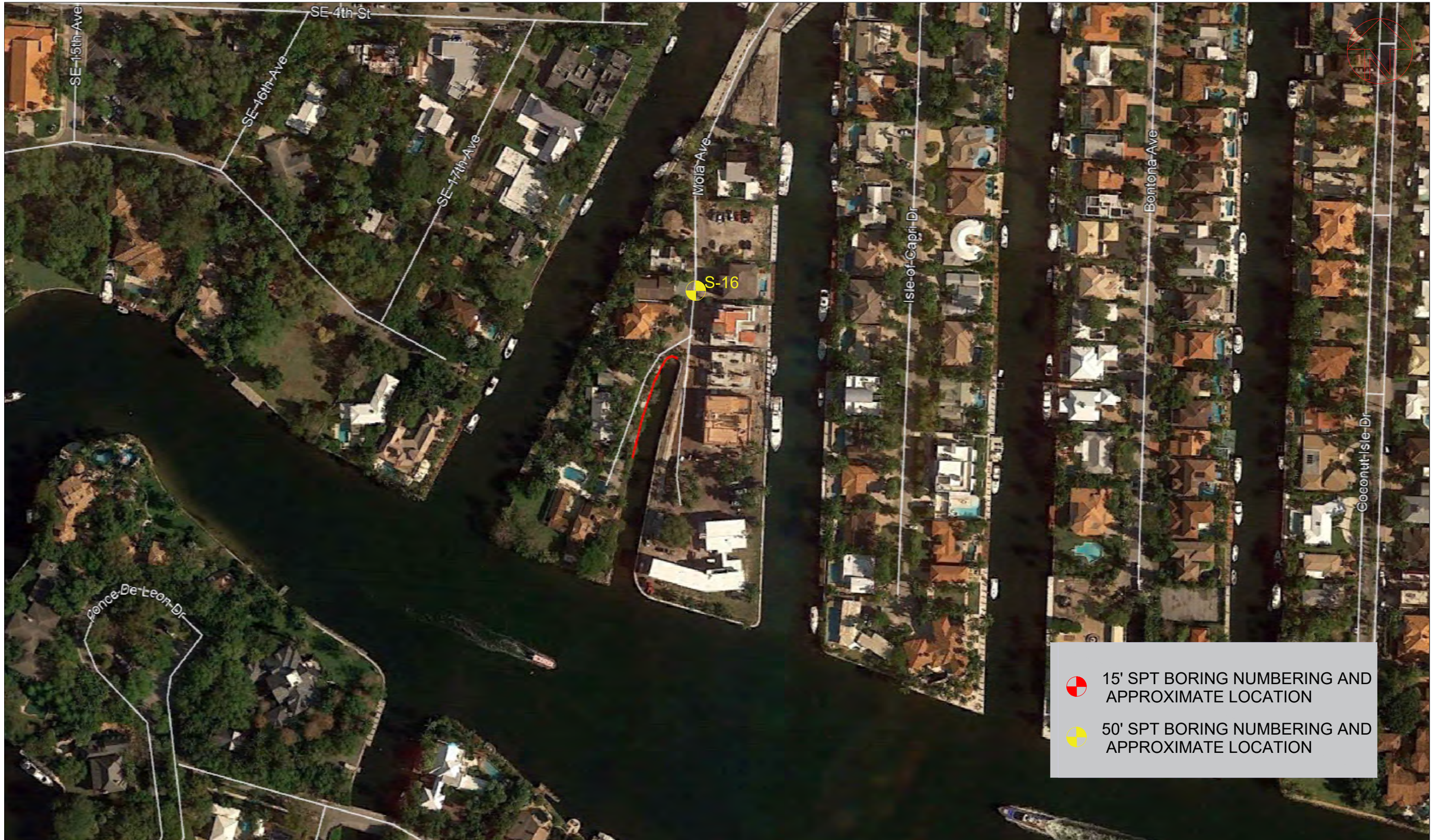

REVISIONS							Names	Dates
Date.	By	Descriptions	Date.	By	Descriptions	Drawn by	KA	11/16/17
						Checked by	AB	11/16/17
						Designed by	KA	11/16/17
						Checked by	AB	11/16/17
						Approved by	AN	07/24/18

RADISE
Infrastructure Engineers & Software Developers
LICENSE NO. - 8901

ENGINEER OF RECORD
RADISE International
4152 West Blue Heron Boulevard, Suite 1114
Riviera Beach, Florida. 33404
TEL 561-841-0103 FAX 561-841-0104
URL : http:// www.radise.net

CITY OF FORT LAUDERDALE
PUBLIC WORKS DEPARTMENT

COUNTY	CLIENT
BROWARD	HAZEN AND SAWYER

SCALE: VERTICAL N.T.S.
SCALE: HORIZONTAL N.T.S.

SHEET TITLE: BORING LOCATION PLAN (SEAWALL 32)

PROJECT NAME: STORMWATER MASTER PLAN MODELING AND DESIGN IMPLEMENTATION

SHEET NO. 2H

RADISE PROJECT NO: 170901

REVISIONS							Names	Dates
Date.	By	Descriptions	Date.	By	Descriptions	Drawn by	KA	11/16/17
						Checked by	AB	11/16/17
						Designed by	KA	11/16/17
						Checked by	AB	11/16/17
						Approved by	AN	07/24/18

RADISE
Infrastructure Engineers & Software Developers
LICENSE NO. - 8901

ENGINEER OF RECORD
RADISE International
4152 West Blue Heron Boulevard, Suite 1114
Riviera Beach, Florida. 33404
TEL 561-841-0103 FAX 561-841-0104
URL : http:// www.radise.net

CITY OF FORT LAUDERDALE
PUBLIC WORKS DEPARTMENT

COUNTY	CLIENT
BROWARD	HAZEN AND SAWYER

SCALE: VERTICAL N.T.S.
SCALE: HORIZONTAL N.T.S.

SHEET TITLE: BORING LOCATION PLAN (SEAWALL 34)

PROJECT NAME: STORMWATER MASTER PLAN MODELING AND DESIGN IMPLEMENTATION

SHEET NO. 2I

RADISE PROJECT NO: 170901

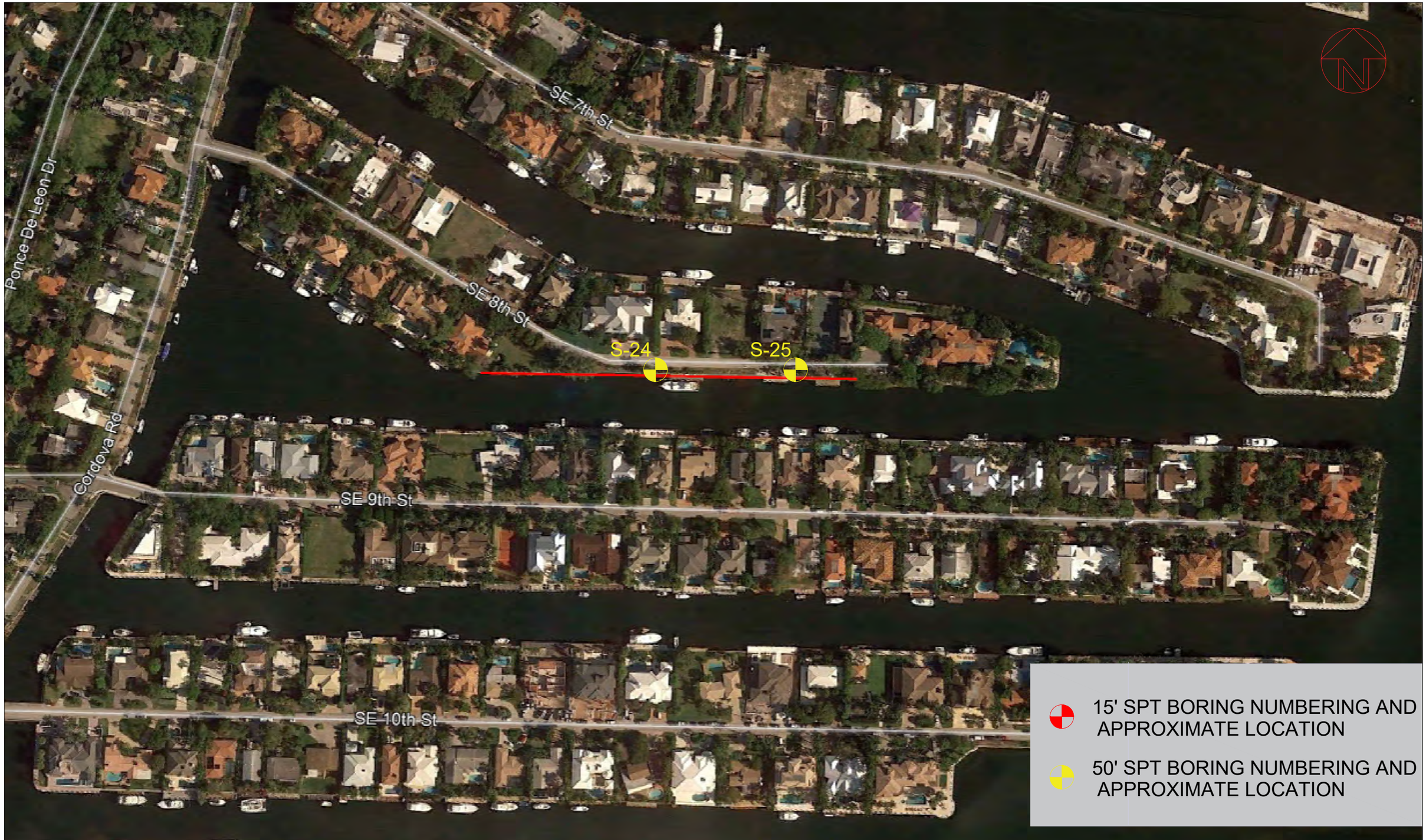

REVISIONS							Names	Dates
Date.	By	Descriptions	Date.	By	Descriptions	Drawn by	KA	11/16/17
						Checked by	AB	11/16/17
						Designed by	KA	11/16/17
						Checked by	AB	11/16/17
						Approved by	AN	07/24/18

RADISE
Infrastructure Engineers & Software Developers
LICENSE NO. - 8901

ENGINEER OF RECORD
RADISE International
4152 West Blue Heron Boulevard, Suite 1114
Riviera Beach, Florida. 33404
TEL 561-841-0103 FAX 561-841-0104
URL : http:// www.radise.net

CITY OF FORT LAUDERDALE
PUBLIC WORKS DEPARTMENT

COUNTY	CLIENT
BROWARD	HAZEN AND SAWYER

SCALE: VERTICAL N.T.S.
SCALE: HORIZONTAL N.T.S.

SHEET TITLE: BORING LOCATION PLAN (SEAWALL 35)

PROJECT NAME: STORMWATER MASTER PLAN MODELING AND DESIGN IMPLEMENTATION

SHEET NO. 2J

RADISE PROJECT NO: 170901

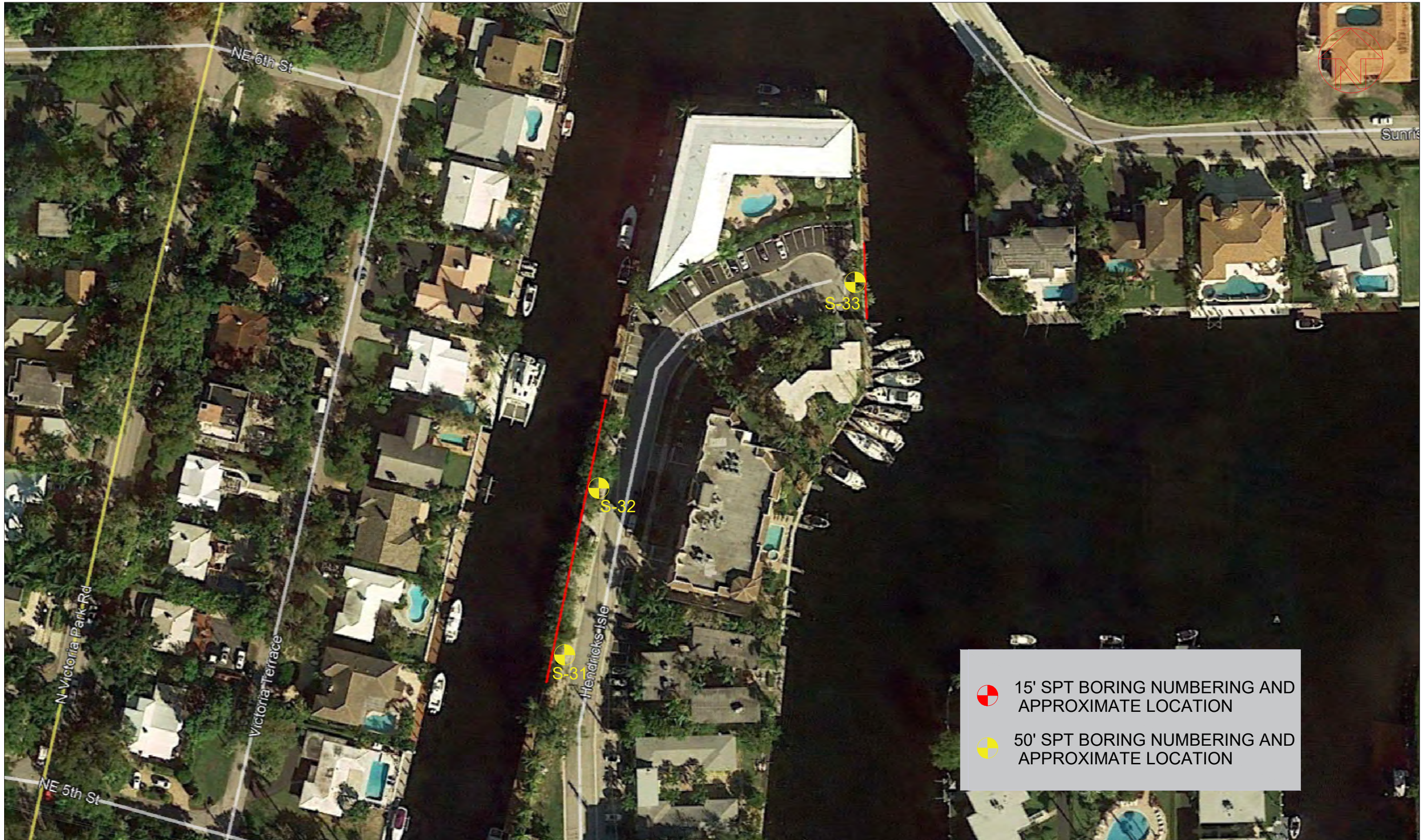

REVISIONS							Names	Dates
Date.	By	Descriptions	Date.	By	Descriptions	Drawn by	KA	07/24/18
						Checked by	AB	07/24/18
						Designed by	KA	07/24/18
						Checked by	AB	07/24/18
						Approved by	AN	07/24/18

RADISE
Infrastructure Engineers & Software Developers
LICENSE NO. - 8901

ENGINEER OF RECORD
RADISE International
4152 West Blue Heron Boulevard, Suite 1114
Riviera Beach, Florida. 33404
TEL 561-841-0103 FAX 561-841-0104
URL : http:// www.radise.net

CITY OF FORT LAUDERDALE
PUBLIC WORKS DEPARTMENT

COUNTY	CLIENT
BROWARD	HAZEN AND SAWYER

SCALE: VERTICAL N.T.S.
SCALE: HORIZONTAL N.T.S.

SHEET TITLE: BORING LOCATION PLAN (SEAWALL TBD1 & TBD2)

PROJECT NAME: STORMWATER MASTER PLAN MODELING AND DESIGN IMPLEMENTATION

SHEET NO. 2K

RADISE PROJECT NO: 170901

REVISIONS					
Date.	By	Descriptions	Date.	By	Descriptions

	Names	Dates
Drawn by	KA	11/15/17
Checked by	AB	11/15/17
Designed by	KA	11/16/17
Checked by	AB	11/16/17
Approved by	AN	07/24/17

RADISE
Infrastructure Engineers & Software Developers
LICENSE NO. - 8901

ENGINEER OF RECORD
RADISE International
4152 West Blue Heron Boulevard, Suite 1114
Riviera Beach, Florida. 33404
TEL 561-841-0103 FAX 561-841-0104
URL : http:// www.radise.net

CITY OF FORT LAUDERDALE
PUBLIC WORKS DEPARTMENT

COUNTY	CLIENT
BROWARD	HAZEN AND SAWYER

SCALE: VERTICAL N.T.S.
SCALE: HORIZONTAL N.T.S.

SHEET TITLE: BORING LOCATION PLAN (SOUTHEAST ISLES)

PROJECT NAME: STORMWATER MASTER PLAN MODELING AND DESIGN IMPLEMENTATION

SHEET NO. 2L

RADISE PROJECT NO: 170901

REVISIONS								
Date.	By	Descriptions	Date.	By	Descriptions		Names	Dates
						Drawn by	KA	11/14/17
						Checked by	AB	11/15/17
						Designed by	KA	11/16/17
						Checked by	AB	11/16/17
						Approved by	AN	07/24/17

RADISE
Infrastructure Engineers & Software Developers
LICENSE NO. - 8901

ENGINEER OF RECORD
RADISE International
4152 West Blue Heron Boulevard, Suite 1114
Riviera Beach, Florida. 33404
TEL 561-841-0103 FAX 561-841-0104
URL : http:// www.radise.net

CITY OF FORT LAUDERDALE
PUBLIC WORKS DEPARTMENT

COUNTY	CLIENT
BROWARD	HAZEN AND SAWYER

SCALE: VERTICAL N.T.S.
SCALE: HORIZONTAL N.T.S.

SHEET TITLE: BORING LOCATION PLAN (DORSY RIVERBEND)

PROJECT NAME: STORMWATER MASTER PLAN MODELING AND DESIGN IMPLEMENTATION

SHEET NO. 2M

RADISE PROJECT NO: 170901

REVISIONS							Names	Dates
Date.	By	Descriptions	Date.	By	Descriptions	Drawn by	KA	11/14/17
						Checked by	AB	11/15/17
						Designed by	KA	11/16/17
						Checked by	AB	11/16/17
						Approved by	AN	07/24/17

RADISE
Infrastructure Engineers & Software Developers
LICENSE NO. - 8901

ENGINEER OF RECORD
RADISE International
4152 West Blue Heron Boulevard, Suite 1114
Riviera Beach, Florida. 33404
TEL 561-841-0103 FAX 561-841-0104
URL : http:// www.radise.net

CITY OF FORT LAUDERDALE
PUBLIC WORKS DEPARTMENT

COUNTY	CLIENT
BROWARD	HAZEN AND SAWYER

SCALE: VERTICAL N.T.S.
SCALE: HORIZONTAL N.T.S.

SHEET TITLE: BORING LOCATION PLAN (DURRS)

PROJECT NAME: STORMWATER MASTER PLAN MODELING AND DESIGN IMPLEMENTATION

SHEET NO. 2N

RADISE PROJECT NO: 170901

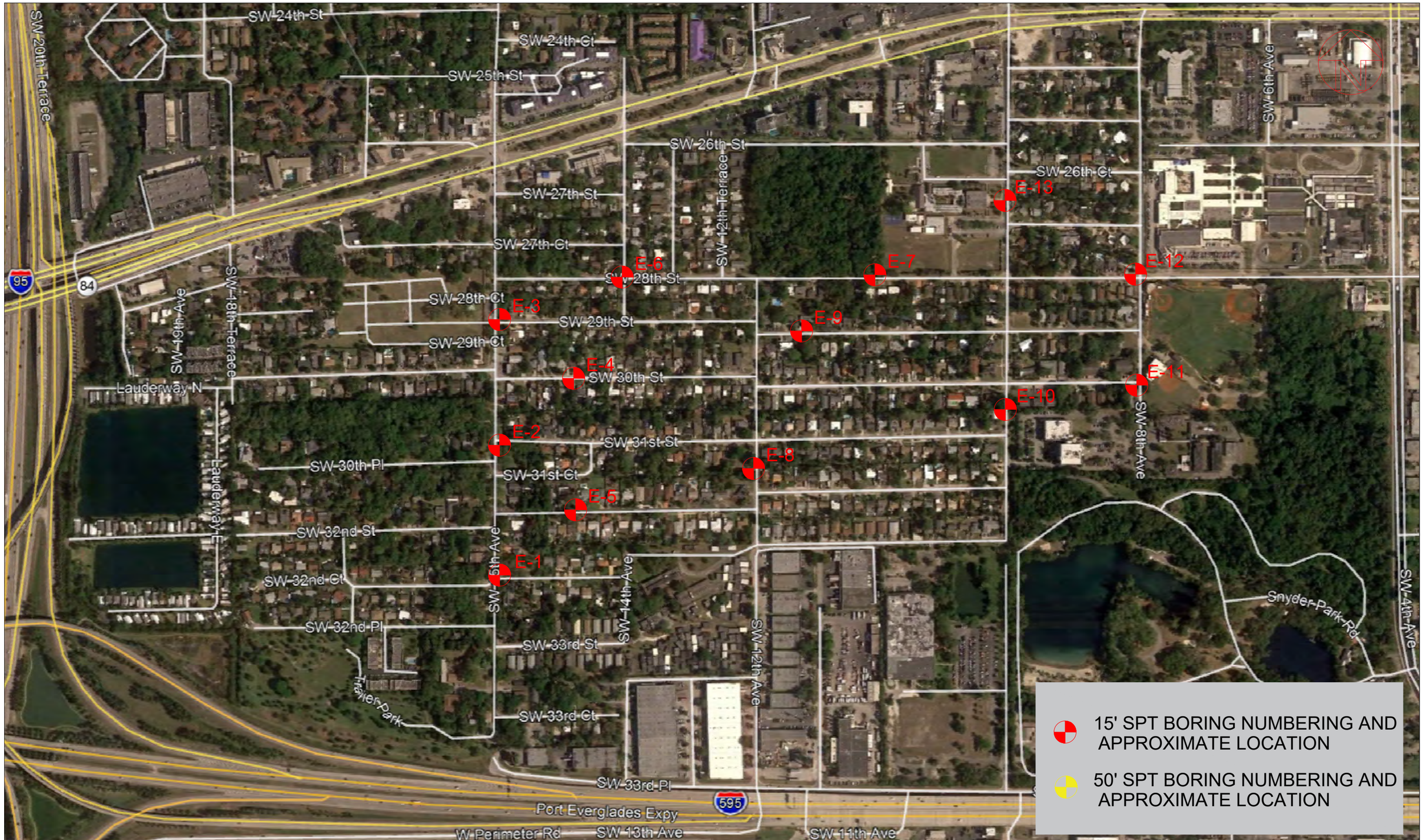

REVISIONS							Names	Dates
Date.	By	Descriptions	Date.	By	Descriptions	Drawn by	KA	11/14/17
						Checked by	AB	11/15/17
						Designed by	KA	11/16/17
						Checked by	AB	11/16/17
						Approved by	AN	07/24/17

RADISE
Infrastructure Engineers & Software Developers
LICENSE NO. - 8901

ENGINEER OF RECORD
RADISE International
4152 West Blue Heron Boulevard, Suite 1114
Riviera Beach, Florida. 33404
TEL 561-841-0103 FAX 561-841-0104
URL : http:// www.radise.net

CITY OF FORT LAUDERDALE
PUBLIC WORKS DEPARTMENT

COUNTY	CLIENT
BROWARD	HAZEN AND SAWYER

SCALE: VERTICAL N.T.S.
SCALE: HORIZONTAL N.T.S.

SHEET TITLE: BORING LOCATION PLAN (EDGEWOOD)

PROJECT NAME: STORMWATER MASTER PLAN MODELING AND DESIGN IMPLEMENTATION

SHEET NO. 2O

RADISE PROJECT NO: 170901

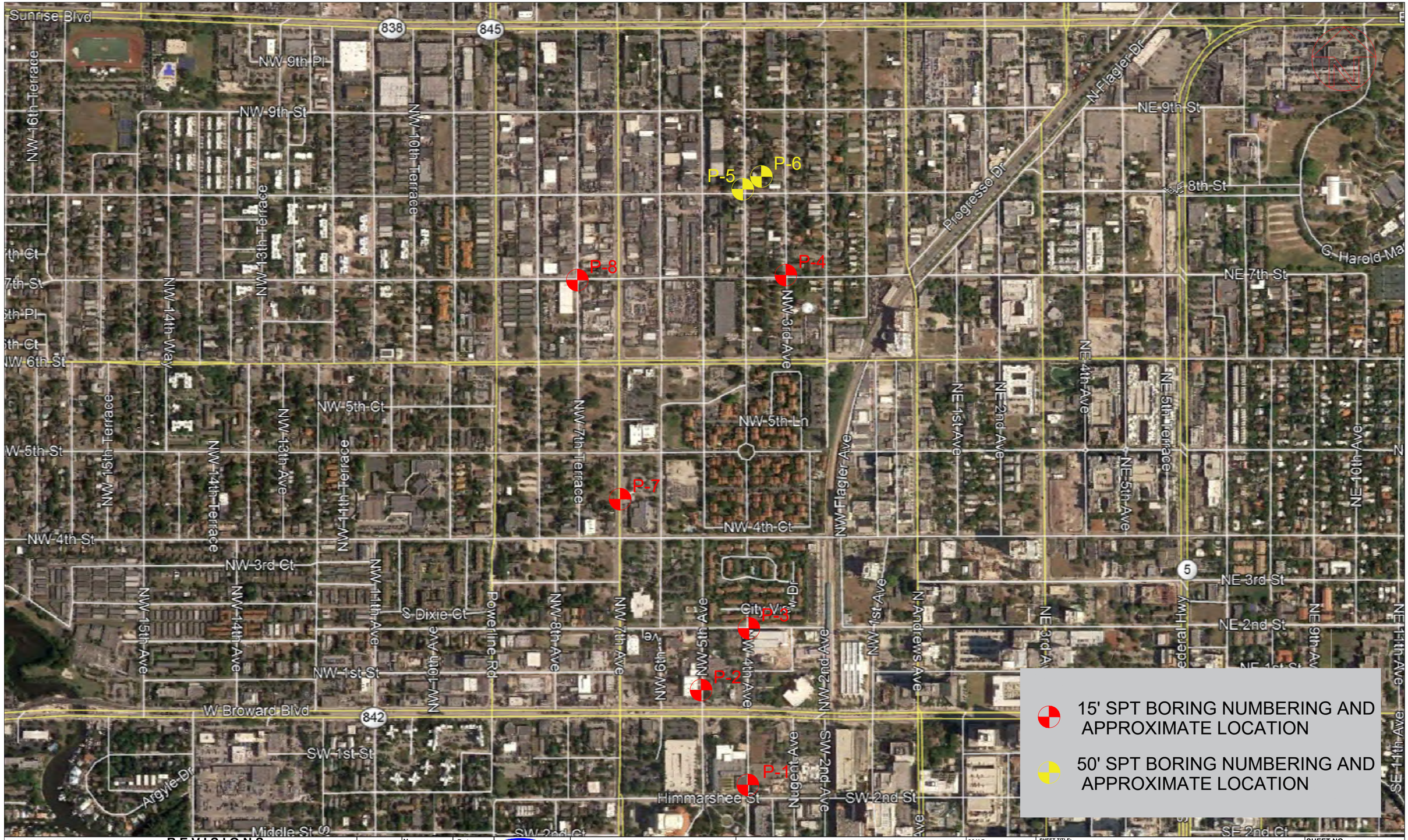

REVISIONS							Names	Dates
Date.	By	Descriptions	Date.	By	Descriptions	Drawn by	KA	11/14/17
						Checked by	AB	11/15/17
						Designed by	KA	11/16/17
						Checked by	AB	11/16/17
						Approved by	AN	07/24/17

RADISE
Infrastructure Engineers & Software Developers
LICENSE NO. - 8901

ENGINEER OF RECORD
RADISE International
4152 West Blue Heron Boulevard, Suite 1114
Riviera Beach, Florida. 33404
TEL 561-841-0103 FAX 561-841-0104
URL : http:// www.radise.net

CITY OF FORT LAUDERDALE
PUBLIC WORKS DEPARTMENT

COUNTY	CLIENT
BROWARD	HAZEN AND SAWYER

SCALE: VERTICAL N.T.S.

SCALE: HORIZONTAL N.T.S.

SHEET TITLE: BORING LOCATION PLAN (PROGRESSO)

PROJECT NAME: STORMWATER MASTER PLAN MODELING AND DESIGN IMPLEMENTATION

SHEET NO. 2P

RADISE PROJECT NO: 170901

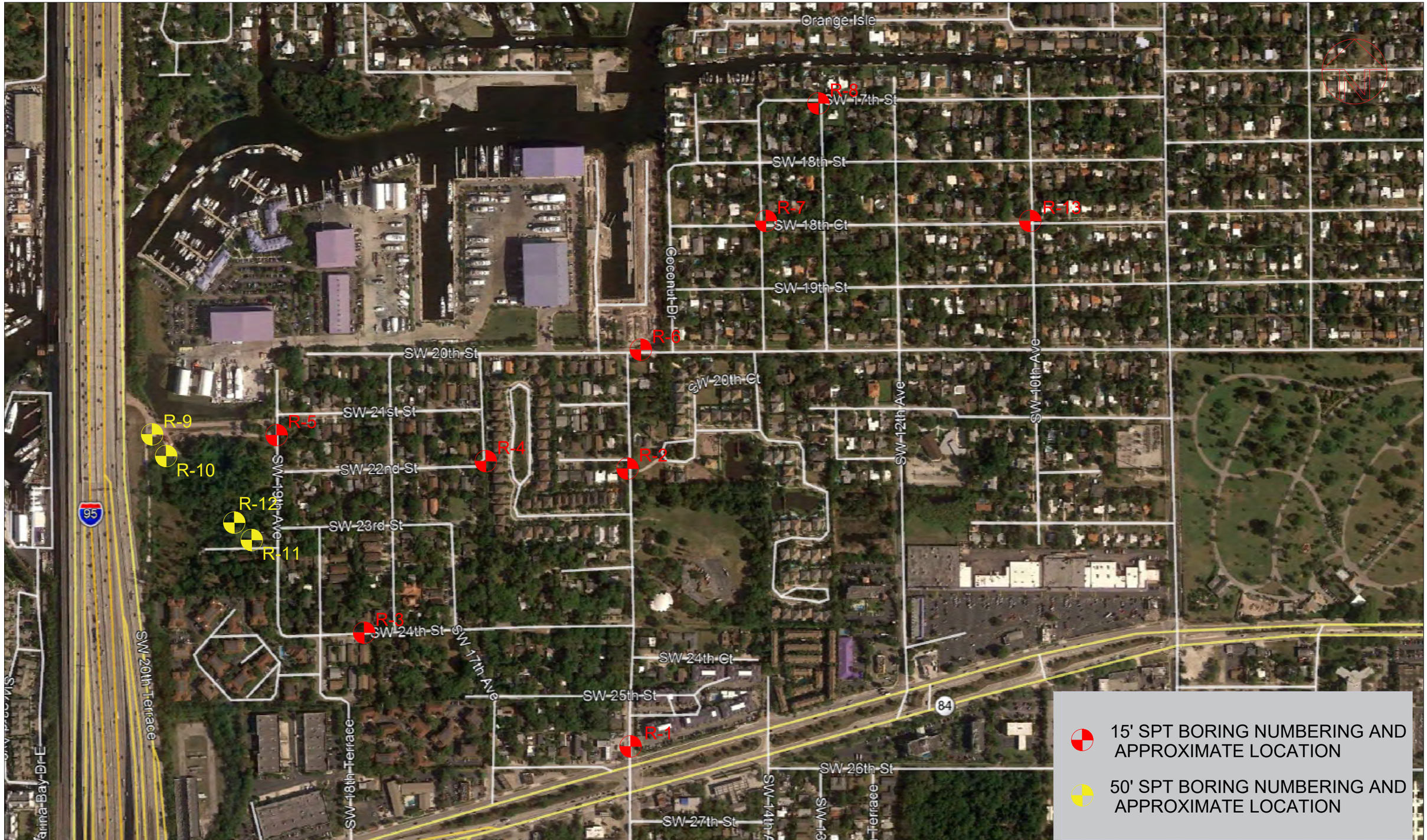

REVISIONS					
Date.	By	Descriptions	Date.	By	Descriptions

	Names	Dates
Drawn by	KA	11/14/17
Checked by	AB	11/15/17
Designed by	KA	11/16/17
Checked by	AB	11/16/17
Approved by	AN	07/24/17

RADISE
Infrastructure Engineers & Software Developers
LICENSE NO. - 8901

ENGINEER OF RECORD
RADISE International
4152 West Blue Heron Boulevard, Suite 1114
Riviera Beach, Florida. 33404
TEL 561-841-0103 FAX 561-841-0104
URL : http:// www.radise.net

CITY OF FORT LAUDERDALE
PUBLIC WORKS DEPARTMENT

COUNTY	CLIENT
BROWARD	HAZEN AND SAWYER

SCALE: VERTICAL N.T.S.
SCALE: HORIZONTAL N.T.S.

SHEET TITLE: BORING LOCATION PLAN (RIVER OAKS)

PROJECT NAME: STORMWATER MASTER PLAN MODELING AND DESIGN IMPLEMENTATION

SHEET NO. 2Q

RADISE PROJECT NO: 170901

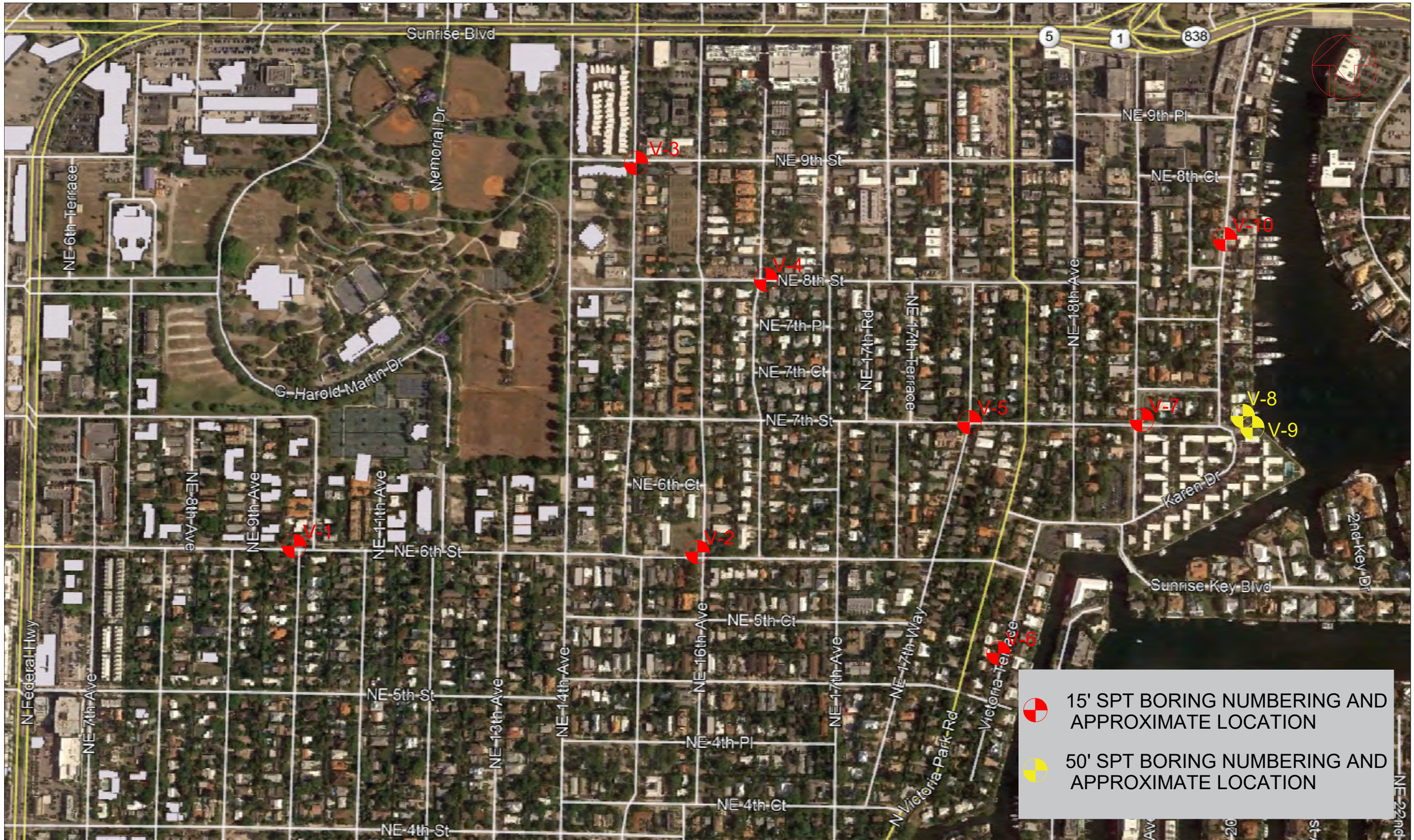

REVISIONS					
Date.	By	Descriptions	Date.	By	Descriptions

	Names	Dates
Drawn by	KA	11/14/17
Checked by	AB	11/15/17
Designed by	KA	11/16/17
Checked by	AB	11/16/17
Approved by	AN	07/24/17

RADISE
Infrastructure Engineers & Software Developers
LICENSE NO. - 8901

ENGINEER OF RECORD
RADISE International
4152 West Blue Heron Boulevard, Suite 1114
Riviera Beach, Florida. 33404
TEL 561-841-0103 FAX 561-841-0104
URL : http:// www.radise.net

CITY OF FORT LAUDERDALE
PUBLIC WORKS DEPARTMENT

COUNTY	CLIENT
BROWARD	HAZEN AND SAWYER

SCALE: VERTICAL N.T.S.
SCALE: HORIZONTAL N.T.S.

SHEET TITLE: BORING LOCATION PLAN (VICTORIA PARK)

PROJECT NAME: STORMWATER MASTER PLAN MODELING AND DESIGN IMPLEMENTATION

SHEET NO. 2R

RADISE PROJECT NO: 170901

	D-1	D-2	D-3
BORING NO.	D-1	D-2	D-3
ELEVATION (NAVD 88):	N/A	N/A	N/A
LATITUDE:	26.1345°	26.1327°	26.1307°
LONGITUDE:	-80.1653°	-80.1639°	-80.1671°
DATE:	10/11/2017	10/10/2017	10/10/2017
DRILLER:	T. FICKLING	T. FICKLING	T. FICKLING
RIG:	CME 45	CME 45	CME 45

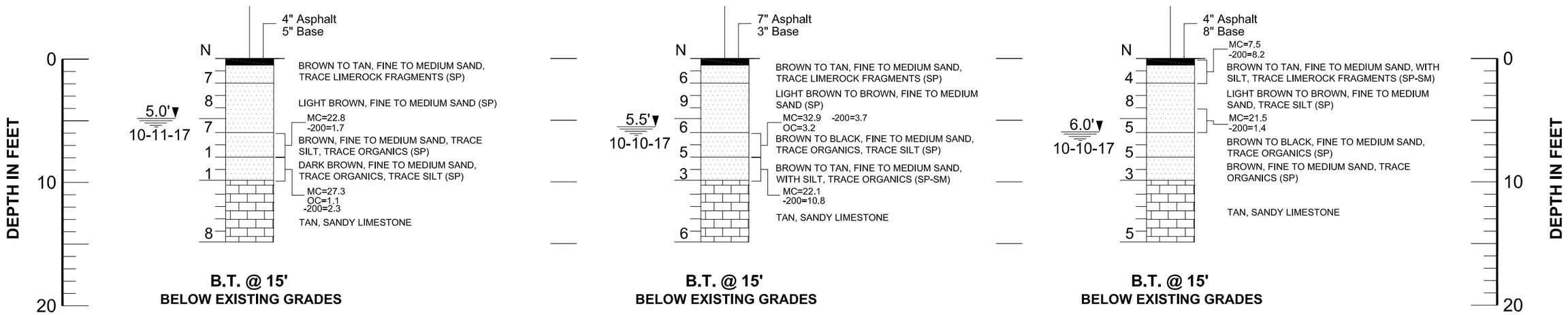

LEGEND

- ASPHALT AND BASE
- LIMESTONE
- SAND
- GRAVEL
- SILTY SAND
- ORGANIC MATERIAL

5.0' ▼ GROUNDWATER DEPTH IN FEET
10-11-17 AND DRILLING DATE

N STANDARD PENETRATION RESISTANCE- BLOWS PER FOOT USING AUTOMATIC HAMMER

SP, SP-SM, SM	UNIFIED SOIL CLASSIFICATION SYSTEM GROUP SYMBOL (ASTM D 2488)
D-1	STANDARD PENETRATION TEST (SPT) BORING AND NUMBER
MC	MOISTURE CONTENT (%)
-200	AMOUNT PASSING US STANDARD # 200 SIEVE (%)
OC	ORGANIC CONTENTS (%)
LL	LIQUID LIMIT (%)
PI	PLASTICITY INDEX (%)
B.T. @ 15'	BORING TERMINATED AT 15 FEET BELOW THE EXISTING GROUND SURFACE

NOTES

(1) BORINGS WERE DRILLED ON OCTOBER, 2017 USING A CENTRAL MINING EQUIPMENT MODEL 45 (CME 45) AUTOMATIC HAMMER DRILL RIG.

(2) STRATA BOUNDARIES ARE APPROXIMATE AND REPRESENT SOIL AND REPRESENT SOIL STRATA AT EACH TEST HOLE LOCATION ONLY. SOIL TRANSITIONS MAY BE MORE GRADUAL THAN IMPLIED.

(3) GROUNDWATER LEVELS SHOWN ON THE SUBSURFACE PROFILES REPRESENT GROUNDWATER SURFACES ON THE DATES SHOWN. GROUNDWATER LEVELS WILL FLUCTUATE THROUGHOUT THE YEAR.

(4) LONGITUDE AND LATITUDE COORDINATES WERE MEASURED IN THE FIELD USING A HAND HELD GPS UNIT.

(5) ELEVATIONS WERE NOT AVAILABLE

(6) AFTER COMPLETION OF DRILLING BOREHOLES WERE BACK FILLED WITH GROUT.

GRANULAR MATERIALS

RELATIVE DENSITY	AUTOMATIC HAMMER SPT N-VALUE BLOWS/FOOT
VERY LOOSE	LESS THAN 3
LOOSE	3 - 8
MEDIUM	8 - 24
DENSE	24 - 40
VERY DENSE	GREATER THAN 40

STANDARD PENETRATION TEST DATA

SPOON INSIDE DIA.	1.375 INCH
SPOON OUTSIDE DIA.	2.0 INCHES
AVG. HAMMER DROP	30 INCHES
HAMMER WEIGHT	140 POUNDS

REVISIONS

Date.	By	Descriptions	Date.	By	Descriptions

	Names	Dates
Drawn by	KA	11/07/17
Checked by	AB	11/07/17
Designed by		
Checked by		
Approved by		

RADISE
Infrastructure Engineers & Software Developers
LICENSE NO. - 8901

ENGINEER OF RECORD
RADISE International
4152 West Blue Heron Boulevard, Suite 1114
Riviera Beach, Florida, 33404
TEL 561-841-0103 FAX 561-841-0104
URL : http:// www.radise.net

CITY OF FORT LAUDERDALE
PUBLIC WORKS DEPARTMENT

COUNTY	CLIENT
BROWARD	HAZEN AND SAWYER

SCALE: VERTICAL N.T.S.
SCALE: HORIZONTAL N.T.S.

SHEET TITLE: SUBSURFACE PROFILES (DURRS)

PROJECT NAME: STORMWATER MASTER PLAN MODELING AND DESIGN IMPLEMENTATION

SHEET NO. 3A

RADISE PROJECT NO: 170901

	D-4	D-5
BORING NO.	D-4	D-5
ELEVATION (NAVD 88):	N/A	N/A
LATITUDE:	26.1328°	26.1297°
LONGITUDE:	-80.1590°	-80.1613°
DATE:	10/11/2017	10/11/2017
DRILLER:	T. FICKLING	T. FICKLING
RIG:	CME 45	CME 45

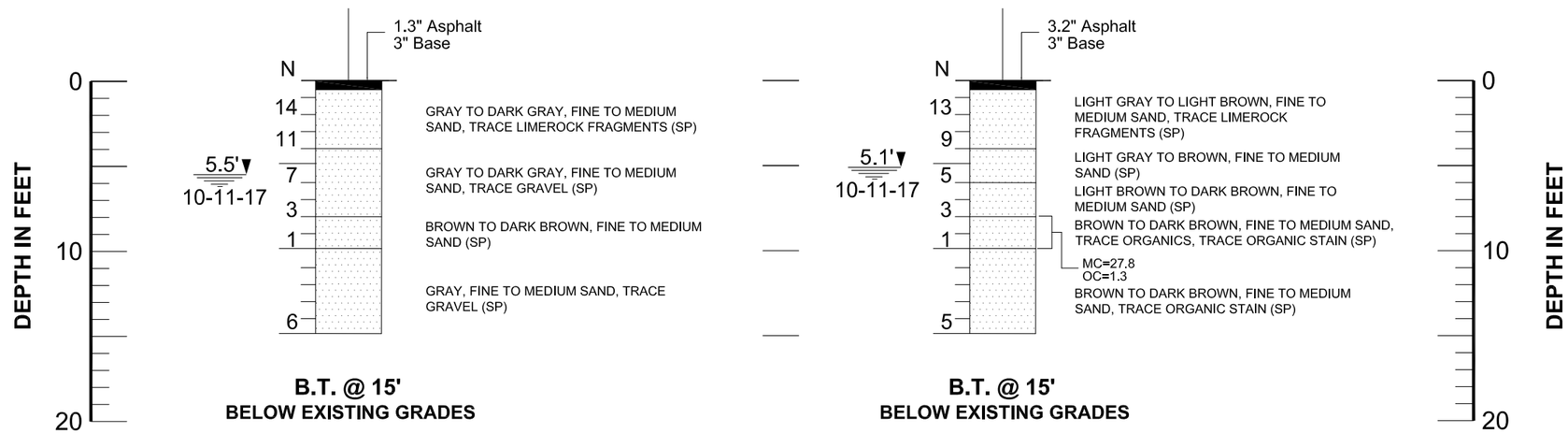

LEGEND

- ASPHALT AND BASE
- LIMESTONE
- SAND
- GRAVEL
- SILTY SAND
- ORGANIC MATERIAL
- 5.0' / 10-11-17 — GROUNDWATER DEPTH IN FEET AND DRILLING DATE
- N — STANDARD PENETRATION RESISTANCE- BLOWS PER FOOT USING AUTOMATIC HAMMER

SP, SP-SM, SM	UNIFIED SOIL CLASSIFICATION SYSTEM GROUP SYMBOL (ASTM D 2488)
D-1	STANDARD PENETRATION TEST (SPT) BORING AND NUMBER
MC	MOISTURE CONTENT (%)
-200	AMOUNT PASSING US STANDARD # 200 SIEVE (%)
OC	ORGANIC CONTENTS (%)
LL	LIQUID LIMIT (%)
PI	PLASTICITY INDEX (%)
B.T. @ 15'	BORING TERMINATED AT 15 FEET BELOW THE EXISTING GROUND SURFACE

NOTES

(1) BORINGS WERE DRILLED ON OCTOBER, 2017 USING A CENTRAL MINING EQUIPMENT MODEL 45 (CME 45) AUTOMATIC HAMMER DRILL RIG.

(2) STRATA BOUNDARIES ARE APPROXIMATE AND REPRESENT SOIL AND REPRESENT SOIL STRATA AT EACH TEST HOLE LOCATION ONLY. SOIL TRANSITIONS MAY BE MORE GRADUAL THAN IMPLIED.

(3) GROUNDWATER LEVELS SHOWN ON THE SUBSURFACE PROFILES REPRESENT GROUNDWATER SURFACES ON THE DATES SHOWN. GROUNDWATER LEVELS WILL FLUCTUATE THROUGHOUT THE YEAR.

(4) LONGITUDE AND LATITUDE COORDINATES WERE MEASURED IN THE FIELD USING A HAND HELD GPS UNIT.

(5) ELEVATIONS WERE NOT AVAILABLE

(6) AFTER COMPLETION OF DRILLING BOREHOLES WERE BACK FILLED WITH GROUT.

GRANULAR MATERIALS

RELATIVE DENSITY	AUTOMATIC HAMMER SPT N-VALUE BLOWS/FOOT
VERY LOOSE	LESS THAN 3
LOOSE	3 - 8
MEDIUM	8 - 24
DENSE	24 - 40
VERY DENSE	GREATER THAN 40

STANDARD PENETRATION TEST DATA

SPOON INSIDE DIA.	1.375 INCH
SPOON OUTSIDE DIA.	2.0 INCHES
AVG. HAMMER DROP	30 INCHES
HAMMER WEIGHT	140 POUNDS

REVISIONS

Date.	By	Descriptions	Date.	By	Descriptions

	Names	Dates
Drawn by	KA	11/09/17
Checked by	AB	11/09/17
Designed by		
Checked by		
Approved by		

RADISE — LICENSE NO. - 8901

ENGINEER OF RECORD
RADISE International
4152 West Blue Heron Boulevard, Suite 1114
Riviera Beach, Florida. 33404
TEL 561-841-0103 FAX 561-841-0104
URL : http:// www.radise.net

CITY OF FORT LAUDERDALE
PUBLIC WORKS DEPARTMENT

COUNTY	CLIENT
BROWARD	HAZEN AND SAWYER

SCALE: VERTICAL N.T.S.
SCALE: HORIZONTAL N.T.S.

SHEET TITLE: SUBSURFACE PROFILES (DRRUS)

PROJECT NAME: STORMWATER MASTER PLAN MODELING AND DESIGN IMPLEMENTATION

SHEET NO. 3B

RADISE PROJECT NO: 170901

	DR-1	DR-2
BORING NO.	DR-1	DR-2
ELEVATION (NAVD 88):	N/A	N/A
LATITUDE:	26.1278°	26.1279°
LONGITUDE:	-80.1621°	-80.1619°
DATE:	10/18/2017	10/19/2017
DRILLER:	R. RAMSEWACK	R. RAMSEWACK
RIG:	CME 45	CME 45

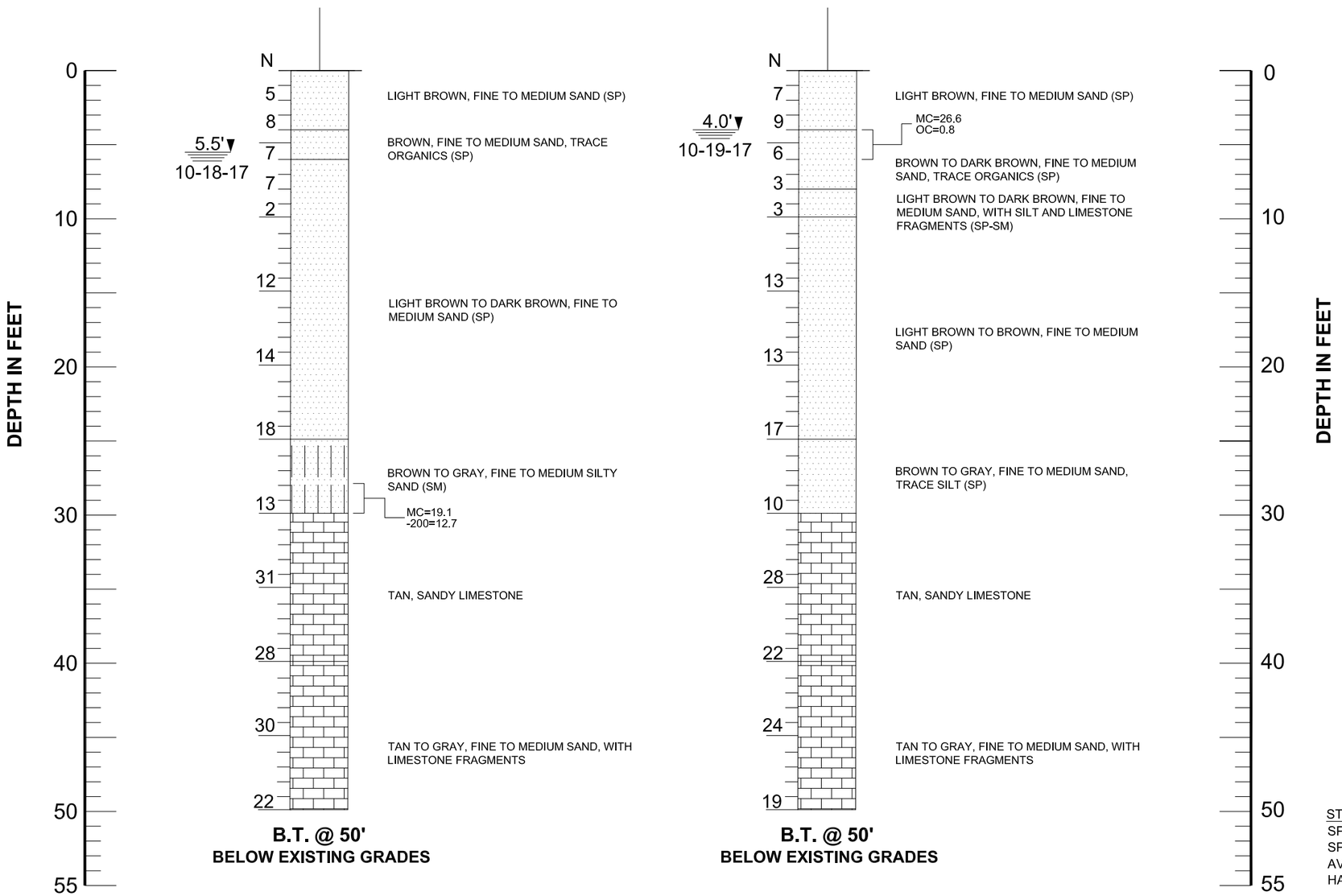

LEGEND

SAND	SHELLY SAND
SILTY SAND	LIMESTONE
ORGANIC MATERIAL	GRAVEL

5.5' ▼ 10-18-17	GROUNDWATER DEPTH IN FEET AND DRILLING DATE
N	STANDARD PENETRATION RESISTANCE- BLOWS PER FOOT USING AUTOMATIC HAMMER
SP, SP-SM, SM	UNIFIED SOIL CLASSIFICATION SYSTEM GROUP SYMBOL (ASTM D 2488)
DR-1	STANDARD PENETRATION TEST (SPT) BORING AND NUMBER
MC	MOISTURE CONTENT (%)
-200	AMOUNT PASSING US STANDARD # 200 SIEVE
OC	ORGANIC CONTENTS (%)
LL	LIQUID LIMIT (%)
PI	PLASTICITY INDEX (%)
B.T. @ 50'	BORING TERMINATED AT 50 FEET BELOW THE EXISTING GROUND SURFACE

NOTES

(1) BORINGS WERE DRILLED ON OCTOBER, 2017 USING A CENTRAL MINING EQUIPMENT MODEL 45 (CME 45) AUTOMATIC HAMMER DRILL RIG.

(2) STRATA BOUNDARIES ARE APPROXIMATE AND REPRESENT SOIL AND REPRESENT SOIL STRATA AT EACH TEST HOLE LOCATION ONLY. SOIL TRANSITIONS MAY BE MORE GRADUAL THAN IMPLIED.

(3) GROUNDWATER LEVELS SHOWN ON THE SUBSURFACE PROFILES REPRESENT GROUNDWATER SURFACES ON THE DATES SHOWN. GROUNDWATER LEVELS WILL FLUCTUATE THROUGHOUT THE YEAR.

(4) LONGITUDE AND LATITUDE COORDINATES WERE MEASURED IN THE FIELD USING A HAND HELD GPS UNIT.

(5) ELEVATIONS WERE NOT AVAILABLE

(6) AFTER COMPLETION OF DRILLING BOREHOLES WERE BACK FILLED WITH GROUT.

STANDARD PENETRATION TEST DATA

SPOON INSIDE DIA.	1.375 INCH
SPOON OUTSIDE DIA.	2.0 INCHES
AVG. HAMMER DROP	30 INCHES
HAMMER WEIGHT	140 POUNDS

GRANULAR MATERIALS

RELATIVE DENSITY	AUTOMATIC HAMMER SPT N-VALUE BLOWS/FOOT
VERY LOOSE	LESS THAN 3
LOOSE	3 - 8
MEDIUM	8 - 24
DENSE	24 - 40
VERY DENSE	GREATER THAN 40

REVISIONS

Date.	By	Descriptions	Date.	By	Descriptions

	Names	Dates
Drawn by	ML	10/26/17
Checked by	AB	10/26/17
Designed by		
Checked by		
Approved by		

RADISE International — LICENSE NO. - 8901

ENGINEER OF RECORD
RADISE International
4152 West Blue Heron Boulevard, Suite 1114
Riviera Beach, Florida. 33404
TEL 561-841-0103 FAX 561-841-0104
URL : http:// www.radise.net

CITY OF FORT LAUDERDALE
PUBLIC WORKS DEPARTMENT

COUNTY	CLIENT
BROWARD	HAZEN AND SAWYER

SCALE: VERTICAL N.T.S.
SCALE: HORIZONTAL N.T.S.

SHEET TITLE: SUBSURFACE PROFILES (DORSEY RIVERBEND)

PROJECT NAME: STORMWATER MASTER PLAN MODELING AND DESIGN IMPLEMENTATION

SHEET NO. 4A

RADISE PROJECT NO: 170901

	DR-3	DR-4	DR-5
BORING NO.	DR-3	DR-4	DR-5
ELEVATION (NAVD 88):	N/A	N/A	N/A
LATITUDE:	26.1256°	26.1256°	26.1288°
LONGITUDE:	-80.1617°	-80.1658°	-80.1660°
DATE:	10/11/2017	10/11/2017	10/11/2017
DRILLER:	T. FICKLING	T. FICKLING	T. FICKLING
RIG:	CME 45	CME 45	CME 45

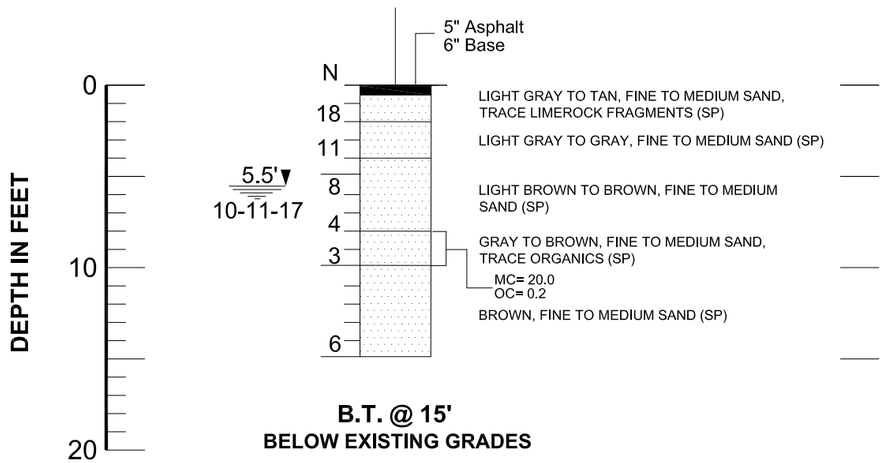

B.T. @ 15'
BELOW EXISTING GRADES

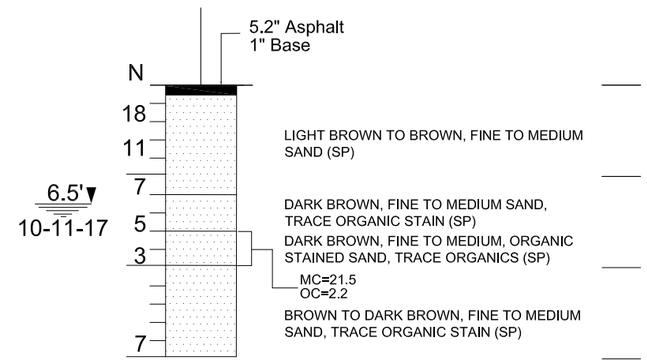

B.T. @ 15'
BELOW EXISTING GRADES

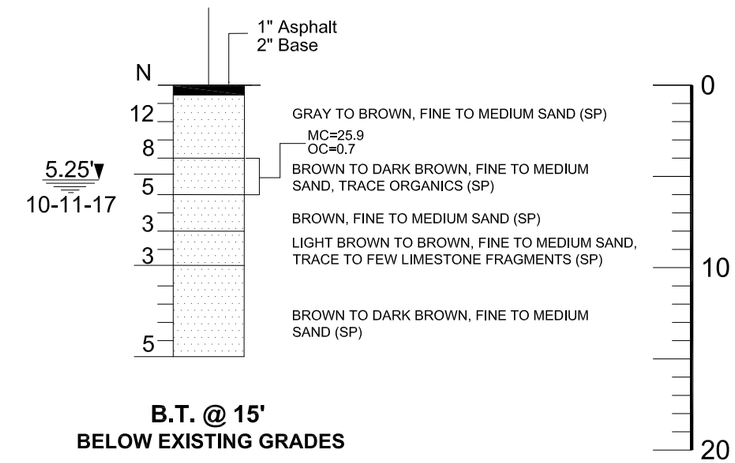

B.T. @ 15'
BELOW EXISTING GRADES

LEGEND

- ASPHALT AND BASE
- SAND
- SILTY SAND
- LIMESTONE
- GRAVEL
- ORGANIC MATERIAL

5.5' / 10-11-17 — GROUNDWATER DEPTH IN FEET AND DRILLING DATE

N — STANDARD PENETRATION RESISTANCE- BLOWS PER FOOT USING AUTOMATIC HAMMER

SP, SP-SM, SM	UNIFIED SOIL CLASSIFICATION SYSTEM GROUP SYMBOL (ASTM D 2488)
DR-1	STANDARD PENETRATION TEST (SPT) BORING AND NUMBER
MC	MOISTURE CONTENT (%)
-200	AMOUNT PASSING US STANDARD # 200 SIEVE (%)
OC	ORGANIC CONTENTS (%)
LL	LIQUID LIMIT (%)
PI	PLASTICITY INDEX (%)
B.T. @ 15'	BORING TERMINATED AT 15 FEET BELOW THE EXISTING GROUND SURFACE

NOTES

(1) BORINGS WERE DRILLED ON OCTOBER, 2017 USING A CENTRAL MINING EQUIPMENT MODEL 45 (CME 45) AUTOMATIC HAMMER DRILL RIG.

(2) STRATA BOUNDARIES ARE APPROXIMATE AND REPRESENT SOIL AND REPRESENT SOIL STRATA AT EACH TEST HOLE LOCATION ONLY. SOIL TRANSITIONS MAY BE MORE GRADUAL THAN IMPLIED.

(3) GROUNDWATER LEVELS SHOWN ON THE SUBSURFACE PROFILES REPRESENT GROUNDWATER SURFACES ON THE DATES SHOWN. GROUNDWATER LEVELS WILL FLUCTUATE THROUGHOUT THE YEAR.

(4) LONGITUDE AND LATITUDE COORDINATES WERE MEASURED IN THE FIELD USING A HAND HELD GPS UNIT.

(5) ELEVATIONS WERE NOT AVAILABLE

(6) AFTER COMPLETION OF DRILLING BOREHOLES WERE BACK FILLED WITH GROUT.

GRANULAR MATERIALS

RELATIVE DENSITY	AUTOMATIC HAMMER SPT N-VALUE BLOWS/FOOT
VERY LOOSE	LESS THAN 3
LOOSE	3 - 8
MEDIUM	8 - 24
DENSE	24 - 40
VERY DENSE	GREATER THAN 40

STANDARD PENETRATION TEST DATA

SPOON INSIDE DIA.	1.375 INCH
SPOON OUTSIDE DIA.	2.0 INCHES
AVG. HAMMER DROP	30 INCHES
HAMMER WEIGHT	140 POUNDS

REVISIONS

Date.	By	Descriptions	Date.	By	Descriptions

	Names	Dates
Drawn by	KA	11/09/17
Checked by	AB	11/09/17
Designed by		
Checked by		
Approved by		

RADISE — Infrastructure Engineers & Software Developers — LICENSE NO. - 8901

ENGINEER OF RECORD
RADISE International
4152 West Blue Heron Boulevard, Suite 1114
Riviera Beach, Florida. 33404
TEL 561-841-0103 FAX 561-841-0104
URL : http:// www.radise.net

CITY OF FORT LAUDERDALE
PUBLIC WORKS DEPARTMENT

COUNTY	CLIENT
BROWARD	HAZEN AND SAWYER

SCALE: VERTICAL N.T.S.
SCALE: HORIZONTAL N.T.S.

SHEET TITLE: SUBSURFACE PROFILES (DORSEY RIVERBEND)

PROJECT NAME: STORMWATER MASTER PLAN MODELING AND DESIGN IMPLEMENTATION

SHEET NO. 4B

RADISE PROJECT NO: 170901

	E-1	E-2	E-3
BORING NO.	E-1	E-2	E-3
ELEVATION (NAVD 88):	N/A	N/A	N/A
LATITUDE:	26.0845°	26.0864°	26.0881°
LONGITUDE:	-80.1607°	-80.1607°	-80.1607°
DATE:	10/24/2017	10/24/2017	10/24/2017
DRILLER:	T. FICKLING	T. FICKLING	T. FICKLING
RIG:	CME 45	CME 45	CME 45

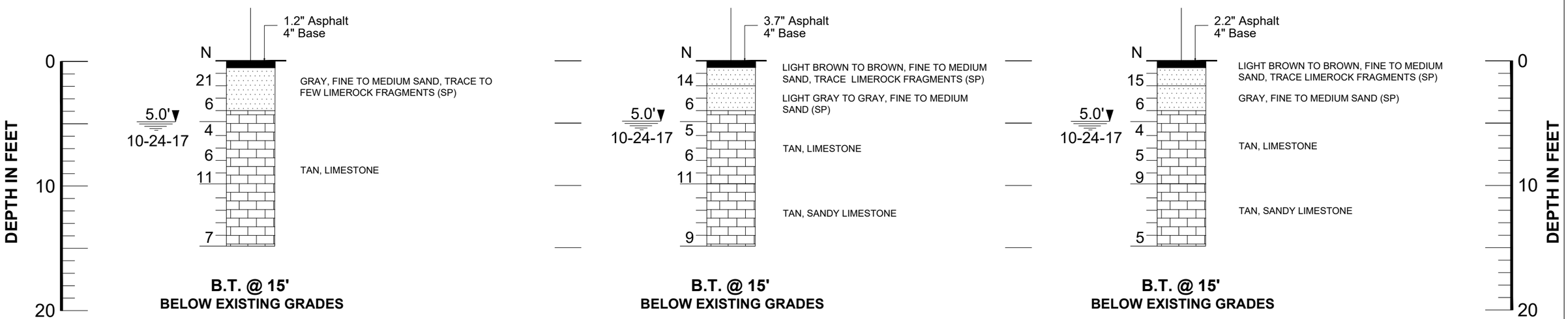

LEGEND

- ASPHALT AND BASE
- LIMESTONE
- SAND
- GRAVEL
- SILTY SAND
- ORGANIC MATERIAL
- 5.0' ▼ GROUNDWATER DEPTH IN FEET
- 10-24-17 AND DRILLING DATE
- N STANDARD PENETRATION RESISTANCE- BLOWS PER FOOT USING AUTOMATIC HAMMER

SP, SP-SM, PT	UNIFIED SOIL CLASSIFICATION SYSTEM GROUP SYMBOL (ASTM D 2488)
E-1	STANDARD PENETRATION TEST (SPT) BORING AND NUMBER
MC	MOISTURE CONTENT (%)
-200	AMOUNT PASSING US STANDARD # 200 SIEVE (%)
OC	ORGANIC CONTENTS (%)
LL	LIQUID LIMIT (%)
PI	PLASTICITY INDEX (%)
B.T. @ 15'	BORING TERMINATED AT 15 FEET BELOW THE EXISTING GROUND SURFACE

NOTES

(1) BORINGS WERE DRILLED ON OCTOBER, 2017 USING A CENTRAL MINING EQUIPMENT MODEL 45 (CME 45) AUTOMATIC HAMMER DRILL RIG.

(2) STRATA BOUNDARIES ARE APPROXIMATE AND REPRESENT SOIL AND REPRESENT SOIL STRATA AT EACH TEST HOLE LOCATION ONLY. SOIL TRANSITIONS MAY BE MORE GRADUAL THAN IMPLIED.

(3) GROUNDWATER LEVELS SHOWN ON THE SUBSURFACE PROFILES REPRESENT GROUNDWATER SURFACES ON THE DATES SHOWN. GROUNDWATER LEVELS WILL FLUCTUATE THROUGHOUT THE YEAR.

(4) LONGITUDE AND LATITUDE COORDINATES WERE MEASURED IN THE FIELD USING A HAND HELD GPS UNIT.

(5) ELEVATIONS WERE NOT AVAILABLE

(6) AFTER COMPLETION OF DRILLING BOREHOLES WERE BACK FILLED WITH GROUT.

GRANULAR MATERIALS

RELATIVE DENSITY	AUTOMATIC HAMMER SPT N-VALUE BLOWS/FOOT
VERY LOOSE	LESS THAN 3
LOOSE	3 - 8
MEDIUM	8 - 24
DENSE	24 - 40
VERY DENSE	GREATER THAN 40

STANDARD PENETRATION TEST DATA

SPOON INSIDE DIA.	1.375 INCH
SPOON OUTSIDE DIA.	2.0 INCHES
AVG. HAMMER DROP	30 INCHES
HAMMER WEIGHT	140 POUNDS

REVISIONS

Date.	By	Descriptions	Date.	By	Descriptions

	Names	Dates
Drawn by	KA	11/06/17
Checked by	AB	11/06/17
Designed by		
Checked by		
Approved by		

RADISE
Infrastructure Engineers & Software Developers
LICENSE NO. - 8901

ENGINEER OF RECORD
RADISE International
4152 West Blue Heron Boulevard, Suite 1114
Riviera Beach, Florida. 33404
TEL 561-841-0103 FAX 561-841-0104
URL : http:// www.radise.net

CITY OF FORT LAUDERDALE
PUBLIC WORKS DEPARTMENT

COUNTY	CLIENT
BROWARD	HAZEN AND SAWYER

SCALE: VERTICAL N.T.S.
SCALE: HORIZONTAL N.T.S.

SHEET TITLE: SUBSURFACE PROFILES (EDGEWOOD)

PROJECT NAME: STORMWATER MASTER PLAN MODELING AND DESIGN IMPLEMENTATION

SHEET NO. 5A

RADISE PROJECT NO: 170901

	E-4	E-5	E-6
BORING NO.	E-4	E-5	E-6
ELEVATION (NAVD 88):	N/A	N/A	N/A
LATITUDE:	26.0873°	26.0855°	26.0888°
LONGITUDE:	-80.1595°	-80.1595°	-80.1588°
DATE:	10/24/2017	10/24/2017	10/24/2017
DRILLER:	T. FICKLING	T. FICKLING	T. FICKLING
RIG:	CME 45	CME 45	CME 45

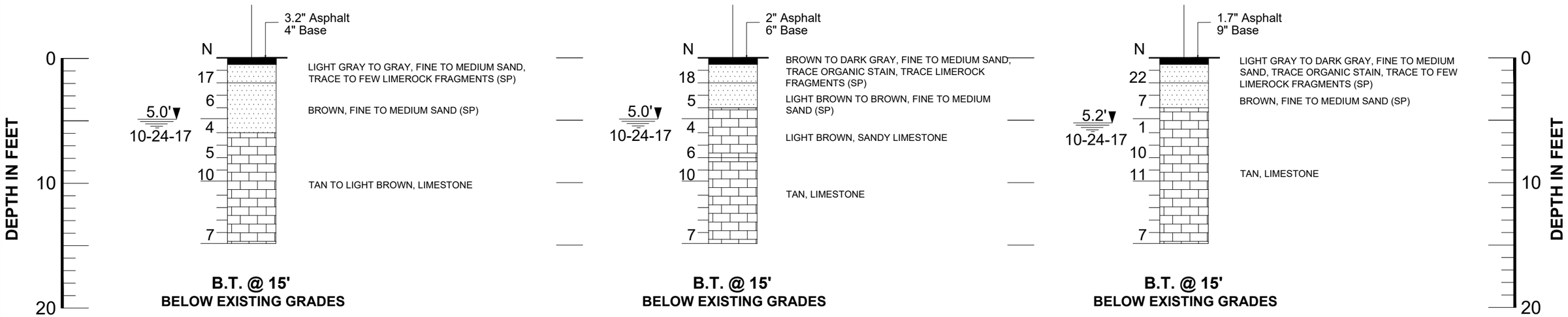

LEGEND

- ASPHALT AND BASE
- LIMESTONE
- SAND
- GRAVEL
- SILTY SAND
- ORGANIC MATERIAL
- 5.0' / 10-24-17 — GROUNDWATER DEPTH IN FEET AND DRILLING DATE
- N — STANDARD PENETRATION RESISTANCE- BLOWS PER FOOT USING AUTOMATIC HAMMER

SP, SP-SM, PT	UNIFIED SOIL CLASSIFICATION SYSTEM GROUP SYMBOL (ASTM D 2488)
E-1	STANDARD PENETRATION TEST (SPT) BORING AND NUMBER
MC	MOISTURE CONTENT (%)
-200	AMOUNT PASSING US STANDARD # 200 SIEVE (%)
OC	ORGANIC CONTENTS (%)
LL	LIQUID LIMIT (%)
PI	PLASTICITY INDEX (%)
B.T. @ 15'	BORING TERMINATED AT 15 FEET BELOW THE EXISTING GROUND SURFACE

NOTES

(1) BORINGS WERE DRILLED ON OCTOBER, 2017 USING A CENTRAL MINING EQUIPMENT MODEL 45 (CME 45) AUTOMATIC HAMMER DRILL RIG.

(2) STRATA BOUNDARIES ARE APPROXIMATE AND REPRESENT SOIL AND REPRESENT SOIL STRATA AT EACH TEST HOLE LOCATION ONLY. SOIL TRANSITIONS MAY BE MORE GRADUAL THAN IMPLIED.

(3) GROUNDWATER LEVELS SHOWN ON THE SUBSURFACE PROFILES REPRESENT GROUNDWATER SURFACES ON THE DATES SHOWN. GROUNDWATER LEVELS WILL FLUCTUATE THROUGHOUT THE YEAR.

(4) LONGITUDE AND LATITUDE COORDINATES WERE MEASURED IN THE FIELD USING A HAND HELD GPS UNIT.

(5) ELEVATIONS WERE NOT AVAILABLE

(6) AFTER COMPLETION OF DRILLING BOREHOLES WERE BACK FILLED WITH GROUT.

GRANULAR MATERIALS

RELATIVE DENSITY	AUTOMATIC HAMMER SPT N-VALUE BLOWS/FOOT
VERY LOOSE	LESS THAN 3
LOOSE	3 - 8
MEDIUM	8 - 24
DENSE	24 - 40
VERY DENSE	GREATER THAN 40

STANDARD PENETRATION TEST DATA

SPOON INSIDE DIA.	1.375 INCH
SPOON OUTSIDE DIA.	2.0 INCHES
AVG. HAMMER DROP	30 INCHES
HAMMER WEIGHT	140 POUNDS

REVISIONS

Date.	By	Descriptions	Date.	By	Descriptions

	Names	Dates
Drawn by	KA	11/06/17
Checked by	AB	11/06/17
Designed by		
Checked by		
Approved by		

RADISE — Infrastructure Engineers & Software Developers

LICENSE NO. - 8901

ENGINEER OF RECORD
RADISE International
4152 West Blue Heron Boulevard, Suite 1114
Riviera Beach, Florida. 33404
TEL 561-841-0103 FAX 561-841-0104
URL : http:// www.radise.net

CITY OF FORT LAUDERDALE
PUBLIC WORKS DEPARTMENT

COUNTY	CLIENT
BROWARD	HAZEN AND SAWYER

SCALE: VERTICAL N.T.S.
SCALE: HORIZONTAL N.T.S.

SHEET TITLE: SUBSURFACE PROFILES (EDGEWOOD)

PROJECT NAME: STORMWATER MASTER PLAN MODELING AND DESIGN IMPLEMENTATION

SHEET NO. 5B

RADISE PROJECT NO: 170901

	E-7	E-8	E-9
BORING NO.	E-7	E-8	E-9
ELEVATION (NAVD 88):	N/A	N/A	N/A
LATITUDE:	26.0888°	26.0861°	26.0880°
LONGITUDE:	-80.1548°	-80.1567°	-80.1560°
DATE:	10/09/2017	10/12/2017	10/12/2017
DRILLER:	T. FICKLING	T. FICKLING	T. FICKLING
RIG:	CME 45	CME 45	CME 45

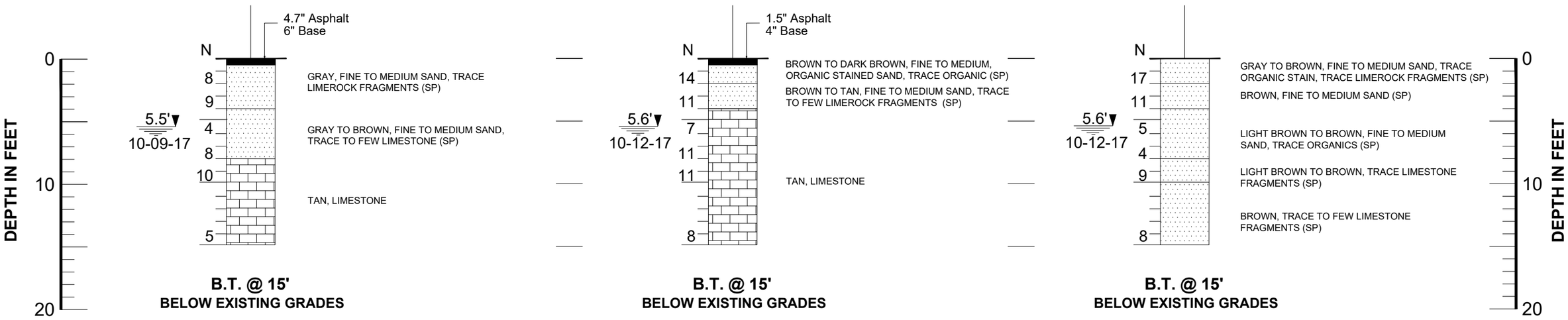

LEGEND

- ASPHALT AND BASE
- SAND
- SILTY SAND
- LIMESTONE
- GRAVEL
- ORGANIC MATERIAL
- 5.0' / 10-24-17 — GROUNDWATER DEPTH IN FEET AND DRILLING DATE
- N — STANDARD PENETRATION RESISTANCE- BLOWS PER FOOT USING AUTOMATIC HAMMER

SP, SP-SM, PT	UNIFIED SOIL CLASSIFICATION SYSTEM GROUP SYMBOL (ASTM D 2488)
E-1	STANDARD PENETRATION TEST (SPT) BORING AND NUMBER
MC	MOISTURE CONTENT (%)
-200	AMOUNT PASSING US STANDARD # 200 SIEVE (%)
OC	ORGANIC CONTENTS (%)
LL	LIQUID LIMIT (%)
PI	PLASTICITY INDEX (%)
B.T. @ 15'	BORING TERMINATED AT 15 FEET BELOW THE EXISTING GROUND SURFACE

NOTES

(1) BORINGS WERE DRILLED ON OCTOBER, 2017 USING A CENTRAL MINING EQUIPMENT MODEL 45 (CME 45) AUTOMATIC HAMMER DRILL RIG.

(2) STRATA BOUNDARIES ARE APPROXIMATE AND REPRESENT SOIL AND REPRESENT SOIL STRATA AT EACH TEST HOLE LOCATION ONLY. SOIL TRANSITIONS MAY BE MORE GRADUAL THAN IMPLIED.

(3) GROUNDWATER LEVELS SHOWN ON THE SUBSURFACE PROFILES REPRESENT GROUNDWATER SURFACES ON THE DATES SHOWN. GROUNDWATER LEVELS WILL FLUCTUATE THROUGHOUT THE YEAR.

(4) LONGITUDE AND LATITUDE COORDINATES WERE MEASURED IN THE FIELD USING A HAND HELD GPS UNIT.

(5) ELEVATIONS WERE NOT AVAILABLE

(6) AFTER COMPLETION OF DRILLING BOREHOLES WERE BACK FILLED WITH GROUT.

GRANULAR MATERIALS

RELATIVE DENSITY	AUTOMATIC HAMMER SPT N-VALUE BLOWS/FOOT
VERY LOOSE	LESS THAN 3
LOOSE	3 - 8
MEDIUM	8 - 24
DENSE	24 - 40
VERY DENSE	GREATER THAN 40

STANDARD PENETRATION TEST DATA

SPOON INSIDE DIA.	1.375 INCH
SPOON OUTSIDE DIA.	2.0 INCHES
AVG. HAMMER DROP	30 INCHES
HAMMER WEIGHT	140 POUNDS

REVISIONS

Date.	By	Descriptions	Date.	By	Descriptions

	Names	Dates
Drawn by	KA	11/06/17
Checked by	AB	11/06/17
Designed by		
Checked by		
Approved by		

RADISE — Infrastructure Engineers & Software Developers

LICENSE NO. - 8901

ENGINEER OF RECORD
RADISE International
4152 West Blue Heron Boulevard, Suite 1114
Riviera Beach, Florida. 33404
TEL 561-841-0103 FAX 561-841-0104
URL : http:// www.radise.net

CITY OF FORT LAUDERDALE
PUBLIC WORKS DEPARTMENT

COUNTY	CLIENT
BROWARD	HAZEN AND SAWYER

SCALE: VERTICAL N.T.S.
SCALE: HORIZONTAL N.T.S.

SHEET TITLE: SUBSURFACE PROFILES (EDGEWOOD)

PROJECT NAME: STORMWATER MASTER PLAN MODELING AND DESIGN IMPLEMENTATION

SHEET NO. 5C

RADISE PROJECT NO: 170901

	E-10	E-11	E-12
BORING NO.	E-10	E-11	E-12
ELEVATION (NAVD 88):	N/A	N/A	N/A
LATITUDE:	26.0870°	26.0874°	26.0889°
LONGITUDE:	-80.1528°	-80.1507°	-80.1507°
DATE:	10/09/2017	10/09/2017	10/09/2017
DRILLER:	T. FICKLING	T. FICKLING	T. FICKLING
RIG:	CME 45	CME 45	CME 45

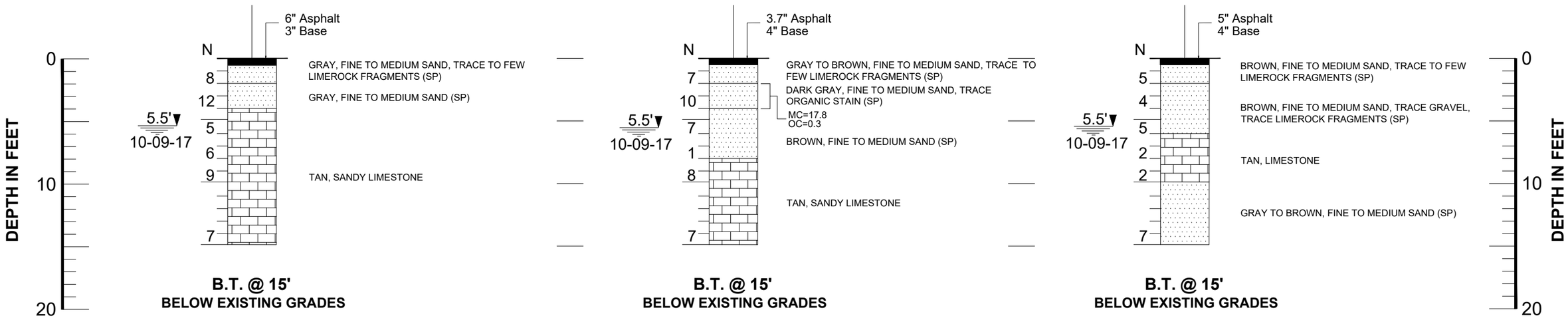

LEGEND

- ASPHALT AND BASE
- LIMESTONE
- SAND
- GRAVEL
- SILTY SAND
- ORGANIC MATERIAL
- 5.0' / 10-24-17 — GROUNDWATER DEPTH IN FEET AND DRILLING DATE
- N — STANDARD PENETRATION RESISTANCE- BLOWS PER FOOT USING AUTOMATIC HAMMER

SP, SP-SM, PT	UNIFIED SOIL CLASSIFICATION SYSTEM GROUP SYMBOL (ASTM D 2488)
E-1	STANDARD PENETRATION TEST (SPT) BORING AND NUMBER
MC	MOISTURE CONTENT (%)
-200	AMOUNT PASSING US STANDARD # 200 SIEVE (%)
OC	ORGANIC CONTENTS (%)
LL	LIQUID LIMIT (%)
PI	PLASTICITY INDEX (%)
B.T. @ 15'	BORING TERMINATED AT 15 FEET BELOW THE EXISTING GROUND SURFACE

NOTES

(1) BORINGS WERE DRILLED ON OCTOBER, 2017 USING A CENTRAL MINING EQUIPMENT MODEL 45 (CME 45) AUTOMATIC HAMMER DRILL RIG.

(2) STRATA BOUNDARIES ARE APPROXIMATE AND REPRESENT SOIL AND REPRESENT SOIL STRATA AT EACH TEST HOLE LOCATION ONLY. SOIL TRANSITIONS MAY BE MORE GRADUAL THAN IMPLIED.

(3) GROUNDWATER LEVELS SHOWN ON THE SUBSURFACE PROFILES REPRESENT GROUNDWATER SURFACES ON THE DATES SHOWN. GROUNDWATER LEVELS WILL FLUCTUATE THROUGHOUT THE YEAR.

(4) LONGITUDE AND LATITUDE COORDINATES WERE MEASURED IN THE FIELD USING A HAND HELD GPS UNIT.

(5) ELEVATIONS WERE NOT AVAILABLE

(6) AFTER COMPLETION OF DRILLING BOREHOLES WERE BACK FILLED WITH GROUT.

GRANULAR MATERIALS

RELATIVE DENSITY	AUTOMATIC HAMMER SPT N-VALUE BLOWS/FOOT
VERY LOOSE	LESS THAN 3
LOOSE	3 - 8
MEDIUM	8 - 24
DENSE	24 - 40
VERY DENSE	GREATER THAN 40

STANDARD PENETRATION TEST DATA

SPOON INSIDE DIA.	1.375 INCH
SPOON OUTSIDE DIA.	2.0 INCHES
AVG. HAMMER DROP	30 INCHES
HAMMER WEIGHT	140 POUNDS

REVISIONS

Date.	By	Descriptions	Date.	By	Descriptions

	Names	Dates
Drawn by	KA	11/06/17
Checked by	AB	11/06/17
Designed by		
Checked by		
Approved by		

RADISE — Infrastructure Engineers & Software Developers — LICENSE NO. - 8901

ENGINEER OF RECORD
RADISE International
4152 West Blue Heron Boulevard, Suite 1114
Riviera Beach, Florida. 33404
TEL 561-841-0103 FAX 561-841-0104
URL : http:// www.radise.net

CITY OF FORT LAUDERDALE
PUBLIC WORKS DEPARTMENT

COUNTY	CLIENT
BROWARD	HAZEN AND SAWYER

SCALE: VERTICAL N.T.S.
SCALE: HORIZONTAL N.T.S.

SHEET TITLE: SUBSURFACE PROFILES (EDGEWOOD)

PROJECT NAME: STORMWATER MASTER PLAN MODELING AND DESIGN IMPLEMENTATION

SHEET NO. 5D

RADISE PROJECT NO: 170901

	E-13	E-14	E-15
BORING NO.	E-13	E-14	E-15
ELEVATION (NAVD 88):	N/A	N/A	N/A
LATITUDE:	26.0899°	26.0907°	26.0868°
LONGITUDE:	-80.1528°	-80.1401°	-80.1391°
DATE:	10/09/2017	10/09/2017	10/09/2017
DRILLER:	T. FICKLING	T. FICKLING	T. FICKLING
RIG:	CME 45	CME 45	CME 45

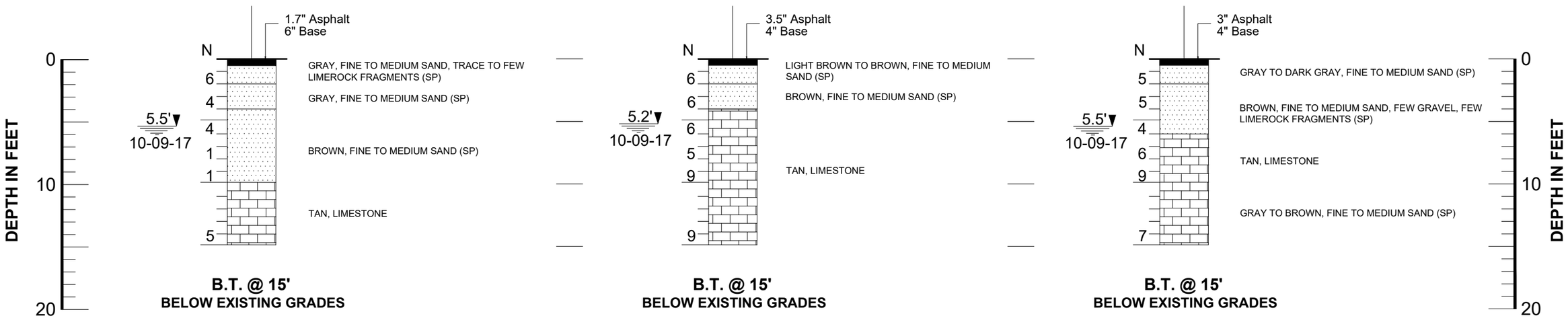

LEGEND

- ASPHALT AND BASE
- LIMESTONE
- SAND
- GRAVEL
- SILTY SAND
- ORGANIC MATERIAL
- 5.0' / 10-24-17 — GROUNDWATER DEPTH IN FEET AND DRILLING DATE
- N — STANDARD PENETRATION RESISTANCE- BLOWS PER FOOT USING AUTOMATIC HAMMER

SP, SP-SM, PT	UNIFIED SOIL CLASSIFICATION SYSTEM GROUP SYMBOL (ASTM D 2488)
E-1	STANDARD PENETRATION TEST (SPT) BORING AND NUMBER
MC	MOISTURE CONTENT (%)
-200	AMOUNT PASSING US STANDARD # 200 SIEVE (%)
OC	ORGANIC CONTENTS (%)
LL	LIQUID LIMIT (%)
PI	PLASTICITY INDEX (%)
B.T. @ 15'	BORING TERMINATED AT 15 FEET BELOW THE EXISTING GROUND SURFACE

NOTES

(1) BORINGS WERE DRILLED ON OCTOBER, 2017 USING A CENTRAL MINING EQUIPMENT MODEL 45 (CME 45) AUTOMATIC HAMMER DRILL RIG.

(2) STRATA BOUNDARIES ARE APPROXIMATE AND REPRESENT SOIL AND REPRESENT SOIL STRATA AT EACH TEST HOLE LOCATION ONLY. SOIL TRANSITIONS MAY BE MORE GRADUAL THAN IMPLIED.

(3) GROUNDWATER LEVELS SHOWN ON THE SUBSURFACE PROFILES REPRESENT GROUNDWATER SURFACES ON THE DATES SHOWN. GROUNDWATER LEVELS WILL FLUCTUATE THROUGHOUT THE YEAR.

(4) LONGITUDE AND LATITUDE COORDINATES WERE MEASURED IN THE FIELD USING A HAND HELD GPS UNIT.

(5) ELEVATIONS WERE NOT AVAILABLE

(6) AFTER COMPLETION OF DRILLING BOREHOLES WERE BACK FILLED WITH GROUT.

GRANULAR MATERIALS

RELATIVE DENSITY	AUTOMATIC HAMMER SPT N-VALUE BLOWS/FOOT
VERY LOOSE	LESS THAN 3
LOOSE	3 - 8
MEDIUM	8 - 24
DENSE	24 - 40
VERY DENSE	GREATER THAN 40

STANDARD PENETRATION TEST DATA

SPOON INSIDE DIA.	1.375 INCH
SPOON OUTSIDE DIA.	2.0 INCHES
AVG. HAMMER DROP	30 INCHES
HAMMER WEIGHT	140 POUNDS

REVISIONS

Date.	By	Descriptions	Date.	By	Descriptions

	Names	Dates
Drawn by	KA	11/06/17
Checked by	AB	11/06/17
Designed by		
Checked by		
Approved by		

RADISE — Infrastructure Engineers & Software Developers — LICENSE NO. - 8901

ENGINEER OF RECORD
RADISE International
4152 West Blue Heron Boulevard, Suite 1114
Riviera Beach, Florida. 33404
TEL 561-841-0103 FAX 561-841-0104
URL : http:// www.radise.net

CITY OF FORT LAUDERDALE
PUBLIC WORKS DEPARTMENT

COUNTY	CLIENT
BROWARD	HAZEN AND SAWYER

SCALE: VERTICAL N.T.S.
SCALE: HORIZONTAL N.T.S.

SHEET TITLE: SUBSURFACE PROFILES (EDGEWOOD)

PROJECT NAME: STORMWATER MASTER PLAN MODELING AND DESIGN IMPLEMENTATION

SHEET NO. 5E

RADISE PROJECT NO: 170901

	P-1	P-2	P-3
BORING NO.	P-1	P-2	P-3
ELEVATION (NAVD 88):	N/A	N/A	N/A
LATITUDE:	26.1207°	26.1223°	26.1239°
LONGITUDE:	-80.1474°	-80.1485°	-80.1475°
DATE:	10/12/2017	10/12/2017	10/12/2017
DRILLER:	T. FICKLING	T. FICKLING	T. FICKLING
RIG:	CME 45	CME 45	CME 45

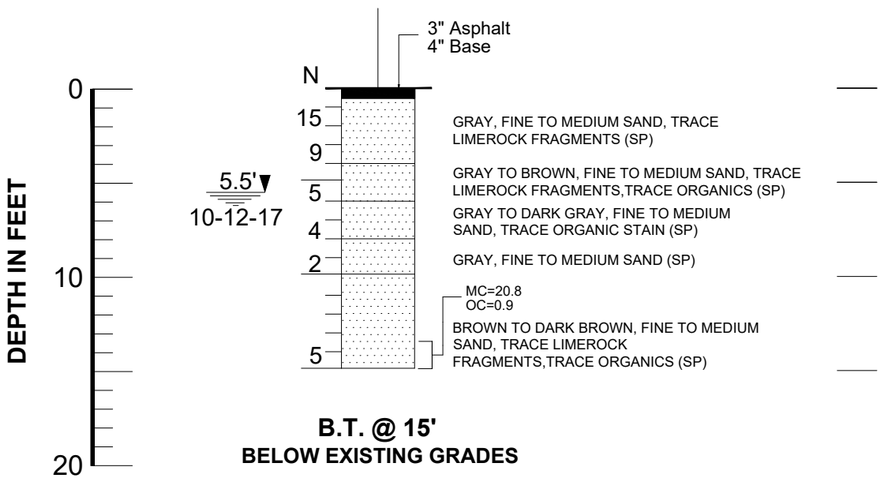

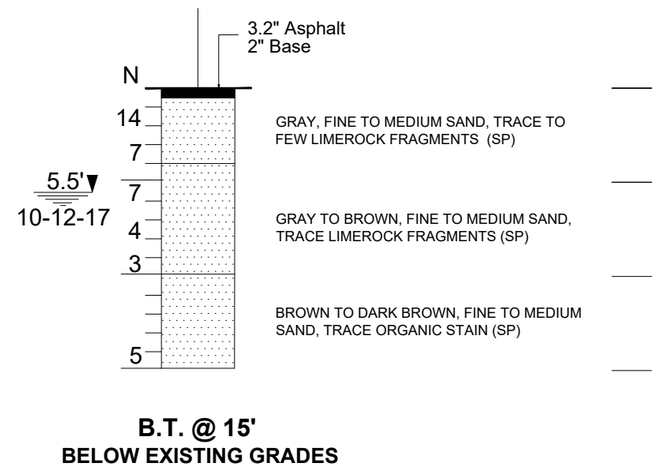

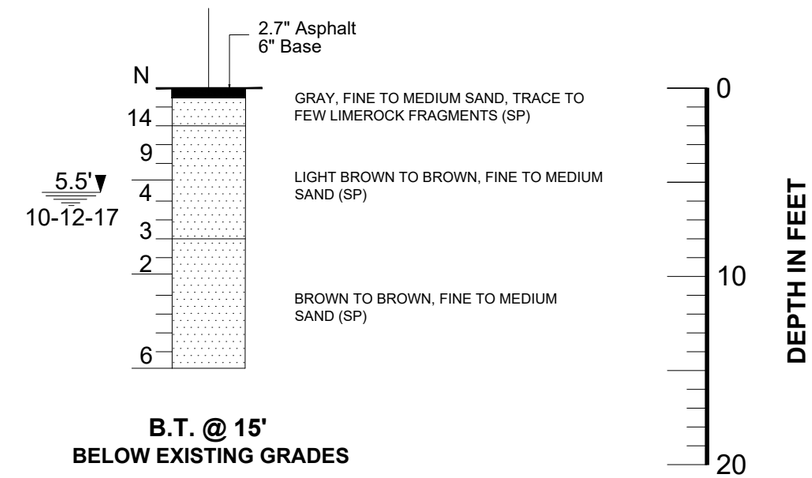

LEGEND

- ASPHALT AND BASE
- LIMESTONE
- SAND
- GRAVEL
- SILTY SAND
- ORGANIC MATERIAL
- 5.5' ▼ / 10-12-17 — GROUNDWATER DEPTH IN FEET AND DRILLING DATE
- N — STANDARD PENETRATION RESISTANCE- BLOWS PER FOOT USING AUTOMATIC HAMMER

SP, SP-SM, PT	UNIFIED SOIL CLASSIFICATION SYSTEM GROUP SYMBOL (ASTM D 2488)
P-1	STANDARD PENETRATION TEST (SPT) BORING AND NUMBER
MC	MOISTURE CONTENT (%)
-200	AMOUNT PASSING US STANDARD # 200 SIEVE (%)
OC	ORGANIC CONTENTS (%)
LL	LIQUID LIMIT (%)
PI	PLASTICITY INDEX (%)
B.T. @ 15'	BORING TERMINATED AT 15 FEET BELOW THE EXISTING GROUND SURFACE

NOTES

(1) BORING WERE DRILLED ON OCTOBER, 2017 USING A CENTRAL MINING EQUIPMENT MODEL 45 (CME 45) AUTOMATIC HAMMER DRILL RIG.

(2) STRATA BOUNDARIES ARE APPROXIMATE AND REPRESENT SOIL AND REPRESENT SOIL STRATA AT EACH TEST HOLE LOCATION ONLY. SOIL TRANSITIONS MAY BE MORE GRADUAL THAN IMPLIED.

(3) GROUNDWATER LEVELS SHOWN ON THE SUBSURFACE PROFILES REPRESENT GROUNDWATER SURFACES ON THE DATES SHOWN. GROUNDWATER LEVELS WILL FLUCTUATE THROUGHOUT THE YEAR.

(4) LONGITUDE AND LATITUDE COORDINATES WERE MEASURED IN THE FIELD USING A HAND HELD GPS UNIT.

(5) ELEVATIONS WERE NOT AVAILABLE

(6) AFTER COMPLETION OF DRILLING BOREHOLES WERE BACK FILLED WITH GROUT.

GRANULAR MATERIALS

RELATIVE DENSITY	AUTOMATIC HAMMER SPT N-VALUE BLOWS/FOOT
VERY LOOSE	LESS THAN 3
LOOSE	3 - 8
MEDIUM	8 - 24
DENSE	24 - 40
VERY DENSE	GREATER THAN 40

STANDARD PENETRATION TEST DATA

SPOON INSIDE DIA.	1.375 INCH
SPOON OUTSIDE DIA.	2.0 INCHES
AVG. HAMMER DROP	30 INCHES
HAMMER WEIGHT	140 POUNDS

REVISIONS

Date.	By	Descriptions	Date.	By	Descriptions

	Names	Dates
Drawn by	KA	11/09/17
Checked by	AB	11/09/17
Designed by		
Checked by		
Approved by		

RADISE — Infrastructure Engineers & Software Developers — LICENSE NO. - 8901

ENGINEER OF RECORD
RADISE International
4152 West Blue Heron Boulevard, Suite 1114
Riviera Beach, Florida. 33404
TEL 561-841-0103 FAX 561-841-0104
URL : http:// www.radise.net

CITY OF FORT LAUDERDALE
PUBLIC WORKS DEPARTMENT

COUNTY	CLIENT
BROWARD	HAZEN AND SAWYER

SCALE: VERTICAL N.T.S. — SCALE: HORIZONTAL N.T.S.

SHEET TITLE: SUBSURFACE PROFILES (PROGRESSO)

PROJECT NAME: STORMWATER MASTER PLAN MODELING AND DESIGN IMPLEMENTATION

SHEET NO. 6A

RADISE PROJECT NO: 170901

	P-4	P-7	P-8
BORING NO.	P-4	P-7	P-8
ELEVATION (NAVD 88):	N/A	N/A	N/A
LATITUDE:	26.1315°	26.1266°	26.1312°
LONGITUDE:	-80.1469°	-80.1506°	-80.1517°
DATE:	10/12/2017	10/12/2017	10/25/2017
DRILLER:	T. FICKLING	T. FICKLING	T. FICKLING
RIG:	CME 45	CME 45	CME 45

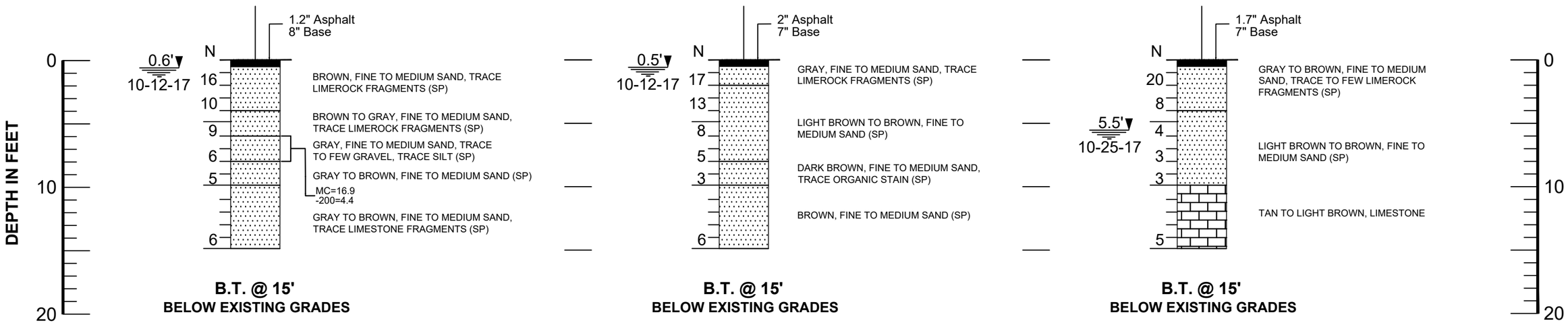

LEGEND

- ASPHALT AND BASE
- LIMESTONE
- SAND
- GRAVEL
- SILTY SAND
- ORGANIC MATERIAL
- 5.5' ▼ / 10-12-17 — GROUNDWATER DEPTH IN FEET AND DRILLING DATE
- N — STANDARD PENETRATION RESISTANCE- BLOWS PER FOOT USING AUTOMATIC HAMMER

SP, SP-SM, PT	UNIFIED SOIL CLASSIFICATION SYSTEM GROUP SYMBOL (ASTM D 2488)
P-1	STANDARD PENETRATION TEST (SPT) BORING AND NUMBER
MC	MOISTURE CONTENT (%)
-200	AMOUNT PASSING US STANDARD # 200 SIEVE (%)
OC	ORGANIC CONTENTS (%)
LL	LIQUID LIMIT (%)
PI	PLASTICITY INDEX (%)
B.T. @ 15'	BORING TERMINATED AT 15 FEET BELOW THE EXISTING GROUND SURFACE

NOTES

(1) BORING WERE DRILLED ON OCTOBER, 2017 USING A CENTRAL MINING EQUIPMENT MODEL 45 (CME 45) AUTOMATIC HAMMER DRILL RIG.

(2) STRATA BOUNDARIES ARE APPROXIMATE AND REPRESENT SOIL AND REPRESENT SOIL STRATA AT EACH TEST HOLE LOCATION ONLY. SOIL TRANSITIONS MAY BE MORE GRADUAL THAN IMPLIED.

(3) GROUNDWATER LEVELS SHOWN ON THE SUBSURFACE PROFILES REPRESENT GROUNDWATER SURFACES ON THE DATES SHOWN. GROUNDWATER LEVELS WILL FLUCTUATE THROUGHOUT THE YEAR.

(4) LONGITUDE AND LATITUDE COORDINATES WERE MEASURED IN THE FIELD USING A HAND HELD GPS UNIT.

(5) ELEVATIONS WERE NOT AVAILABLE

(6) AFTER COMPLETION OF DRILLING BOREHOLES WERE BACK FILLED WITH GROUT.

GRANULAR MATERIALS

RELATIVE DENSITY	AUTOMATIC HAMMER SPT N-VALUE BLOWS/FOOT
VERY LOOSE	LESS THAN 3
LOOSE	3 - 8
MEDIUM	8 - 24
DENSE	24 - 40
VERY DENSE	GREATER THAN 40

STANDARD PENETRATION TEST DATA

SPOON INSIDE DIA.	1.375 INCH
SPOON OUTSIDE DIA.	2.0 INCHES
AVG. HAMMER DROP	30 INCHES
HAMMER WEIGHT	140 POUNDS

REVISIONS

Date.	By	Descriptions	Date.	By	Descriptions

	Names	Dates
Drawn by	KA	11/09/17
Checked by	AB	11/09/17
Designed by		
Checked by		
Approved by		

RADISE — Infrastructure Engineers & Software Developers — LICENSE NO. - 8901

ENGINEER OF RECORD
RADISE International
4152 West Blue Heron Boulevard, Suite 1114
Riviera Beach, Florida. 33404
TEL 561-841-0103 FAX 561-841-0104
URL : http:// www.radise.net

CITY OF FORT LAUDERDALE
PUBLIC WORKS DEPARTMENT

COUNTY	CLIENT
BROWARD	HAZEN AND SAWYER

SCALE: VERTICAL N.T.S.
SCALE: HORIZONTAL N.T.S.

SHEET TITLE: SUBSURFACE PROFILES (PROGRESSO)

PROJECT NAME: STORMWATER MASTER PLAN MODELING AND DESIGN IMPLEMENTATION

SHEET NO. 6B

RADISE PROJECT NO: 170901

	P-5	P-6
BORING NO.	P-5	P-6
ELEVATION (NAVD 88):	N/A	N/A
LATITUDE:	26.1332°	26.1335°
LONGITUDE:	-80.1479°	-80.1476°
DATE:	10/20/2017	10/20/2017
DRILLER:	R. RAMSEWACK	R. RAMSEWACK
RIG:	CME 45	CME 45

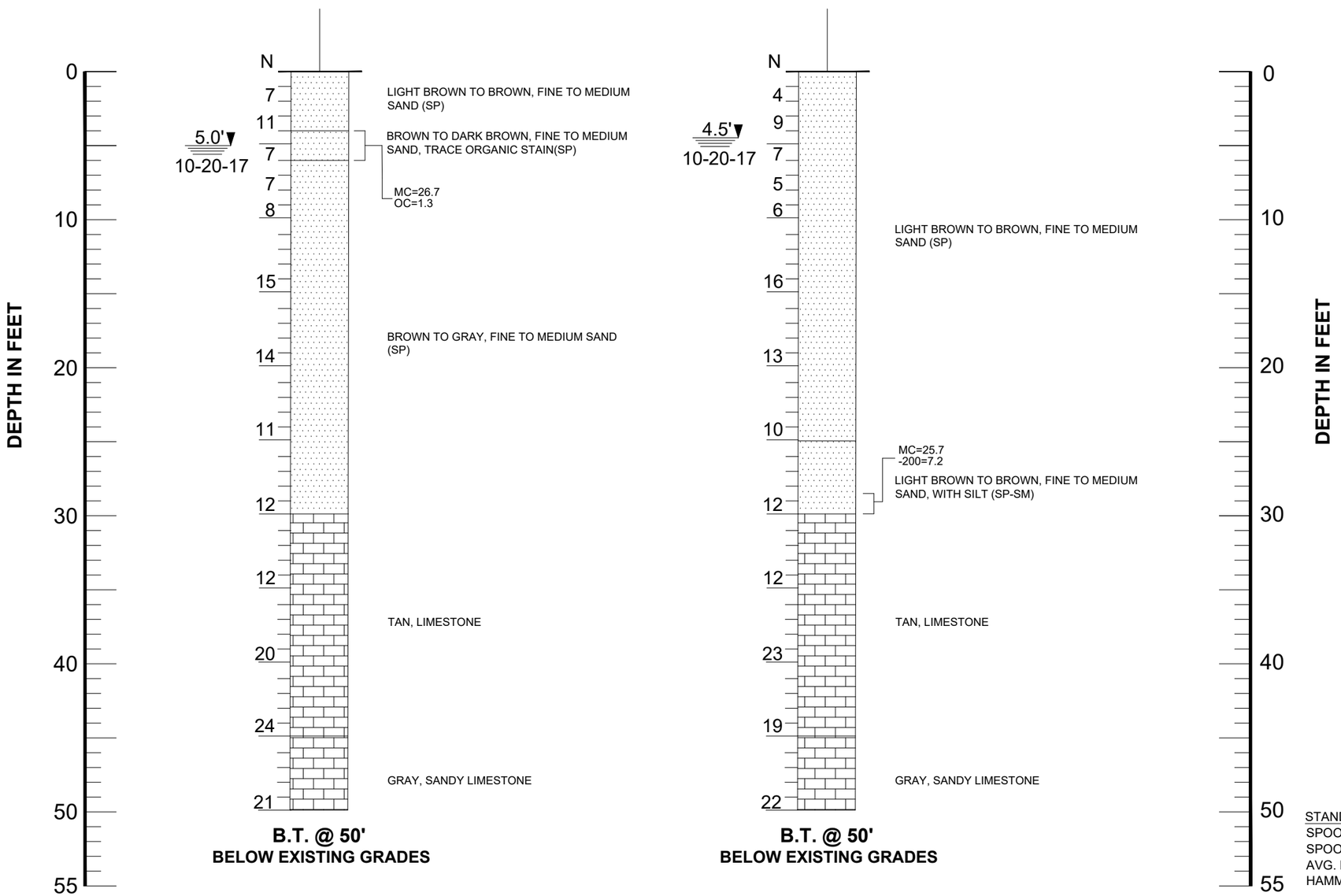

LEGEND

SAND	SHELLY SAND
SILT	LIMESTONE
ORGANIC MATERIAL	GRAVEL

5.0' ▼ 10-20-17	GROUNDWATER DEPTH IN FEET AND DRILLING DATE
N	STANDARD PENETRATION RESISTANCE- BLOWS PER FOOT USING AUTOMATIC HAMMER
SP, SP-SM, PT	UNIFIED SOIL CLASSIFICATION SYSTEM GROUP SYMBOL (ASTM D 2488)
P-5	STANDARD PENETRATION TEST (SPT) BORING AND NUMBER
MC	MOISTURE CONTENT (%)
-200	AMOUNT PASSING US STANDARD # 200 SIEVE
OC	ORGANIC CONTENTS (%)
LL	LIQUID LIMIT (%)
PI	PLASTICITY INDEX (%)
B.T. @ 50'	BORING TERMINATED AT 50 FEET BELOW THE EXISTING GROUND SURFACE

NOTES

(1) BORINGS WERE DRILLED ON OCTOBER, 2017 USING A CENTRAL MINING EQUIPMENT MODEL 45 (CME 45) AUTOMATIC HAMMERDRILL RIG.

(2) STRATA BOUNDARIES ARE APPROXIMATE AND REPRESENT SOIL AND REPRESENT SOIL STRATA AT EACH TEST HOLE LOCATION ONLY. SOIL TRANSITIONS MAY BE MORE GRADUAL THAN IMPLIED.

(3) GROUNDWATER LEVELS SHOWN ON THE SUBSURFACE PROFILES REPRESENT GROUNDWATER SURFACES ON THE DATES SHOWN. GROUNDWATER LEVELS WILL FLUCTUATE THROUGHOUT THE YEAR.

(4) LONGITUDE AND LATITUDE COORDINATES WERE MEASURED IN THE FIELD USING A HAND HELD GPS UNIT.

(5) ELEVATIONS WERE NOT AVAILABLE

(6) AFTER COMPLETION OF DRILLING BOREHOLES WERE BACK FILLED WITH GROUT.

STANDARD PENETRATION TEST DATA

SPOON INSIDE DIA.	1.375 INCH
SPOON OUTSIDE DIA.	2.0 INCHES
AVG. HAMMER DROP	30 INCHES
HAMMER WEIGHT	140 POUNDS

GRANULAR MATERIALS

RELATIVE DENSITY	AUTOMATIC HAMMER SPT N-VALUE BLOWS/FOOT
VERY LOOSE	LESS THAN 3
LOOSE	3 - 8
MEDIUM	8 - 24
DENSE	24 - 40
VERY DENSE	GREATER THAN 40

REVISIONS

Date.	By	Descriptions	Date.	By	Descriptions

	Names	Dates
Drawn by	ML	10/13/17
Checked by	AB	10/13/17
Designed by		
Checked by		
Approved by		

RADISE
Infrastructure Engineers & Software Developers
LICENSE NO. - 8901

ENGINEER OF RECORD
RADISE International
4152 West Blue Heron Boulevard, Suite 1114
Riviera Beach, Florida. 33404
TEL 561-841-0103 FAX 561-841-0104
URL : http:// www.radise.net

CITY OF FORT LAUDERDALE
PUBLIC WORKS DEPARTMENT

COUNTY	CLIENT
BROWARD	HAZEN AND SAWYER

SCALE: VERTICAL N.T.S.
SCALE: HORIZONTAL N.T.S.

SHEET TITLE: SUBSURFACE PROFILES (PROGRESSO)

PROJECT NAME: STORMWATER MASTER PLAN MODELING AND DESIGN IMPLEMENTATION

SHEET NO. 6C

RADISE PROJECT NO: 170901

	R-1	R-2	R-3
BORING NO.	R-1	R-2	R-3
ELEVATION (NAVD 88):	N/A	N/A	N/A
LATITUDE:	26.0909°	26.0945°	26.0924°
LONGITUDE:	-80.1608°	-80.1609°	-80.1648°
DATE:	10/02/2017	10/02/2017	10/03/2017
DRILLER:	P. RAMSEWACK	P. RAMSEWACK	P. RAMSEWACK
RIG:	CME 45	CME 45	CME 45

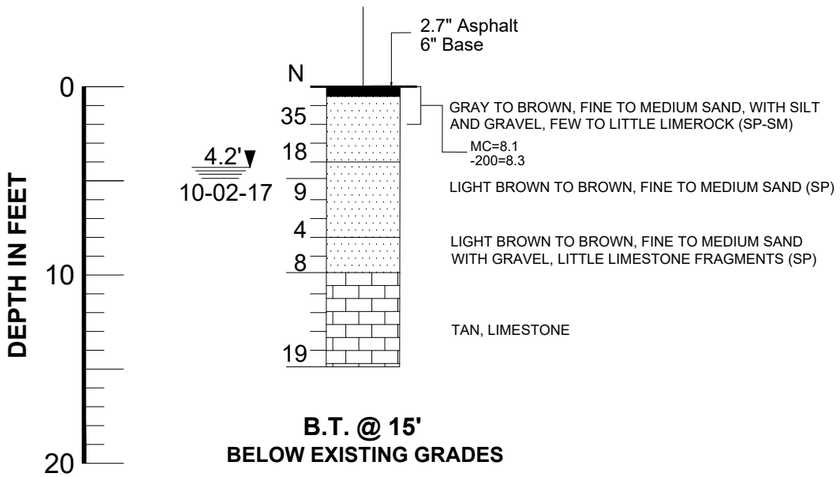

B.T. @ 15'
BELOW EXISTING GRADES

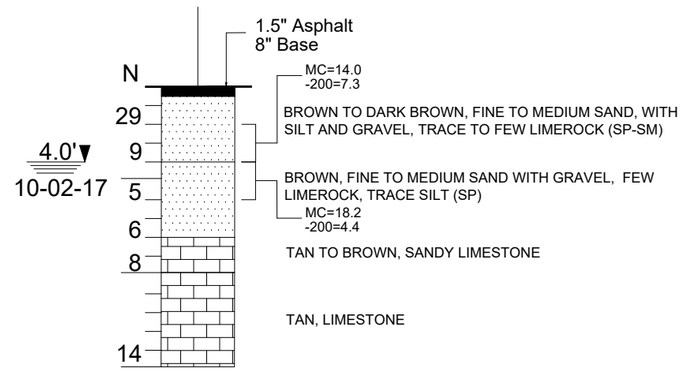

B.T. @ 15'
BELOW EXISTING GRADES

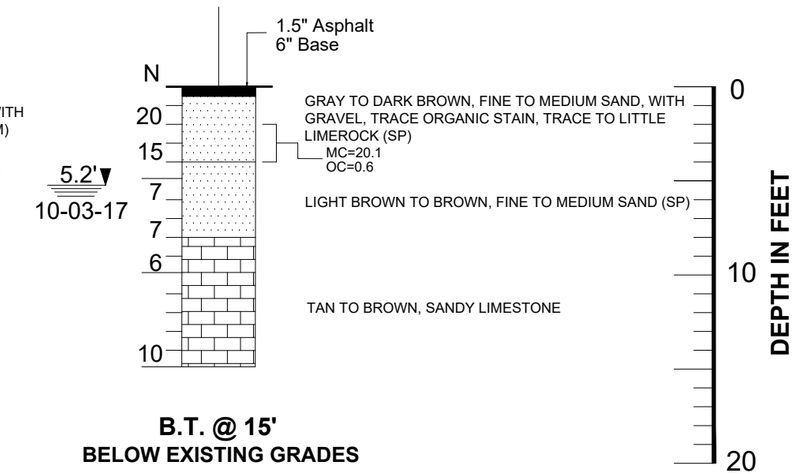

B.T. @ 15'
BELOW EXISTING GRADES

LEGEND

- ASPHALT AND BASE
- LIMESTONE
- SAND
- GRAVEL
- SILTY SAND
- ORGANIC MATERIAL
- 4.2' / 10-02-17 — GROUNDWATER DEPTH IN FEET AND DRILLING DATE
- N — STANDARD PENETRATION RESISTANCE- BLOWS PER FOOT USING AUTOMATIC HAMMER

SP, SP-SM, PT	UNIFIED SOIL CLASSIFICATION SYSTEM GROUP SYMBOL (ASTM D 2488)
R-1	STANDARD PENETRATION TEST (SPT) BORING AND NUMBER
MC	MOISTURE CONTENT (%)
-200	AMOUNT PASSING US STANDARD # 200 SIEVE (%)
OC	ORGANIC CONTENTS (%)
LL	LIQUID LIMIT (%)
PI	PLASTICITY INDEX (%)
B.T. @ 15'	BORING TERMINATED AT 15 FEET BELOW THE EXISTING GROUND SURFACE

NOTES

(1) BORING WERE DRILLED ON OCTOBER, 2017 USING A CENTRAL MINING EQUIPMENT MODEL 45 (CME 45) AUTOMATIC HAMMER DRILL RIG.

(2) STRATA BOUNDARIES ARE APPROXIMATE AND REPRESENT SOIL AND REPRESENT SOIL STRATA AT EACH TEST HOLE LOCATION ONLY. SOIL TRANSITIONS MAY BE MORE GRADUAL THAN IMPLIED.

(3) GROUNDWATER LEVELS SHOWN ON THE SUBSURFACE PROFILES REPRESENT GROUNDWATER SURFACES ON THE DATES SHOWN. GROUNDWATER LEVELS WILL FLUCTUATE THROUGHOUT THE YEAR.

(4) LONGITUDE AND LATITUDE COORDINATES WERE MEASURED IN THE FIELD USING A HAND HELD GPS UNIT.

(5) ELEVATIONS WERE NOT AVAILABLE

(6) AFTER COMPLETION OF DRILLING BOREHOLES WERE BACK FILLED WITH GROUT.

GRANULAR MATERIALS

RELATIVE DENSITY	AUTOMATIC HAMMER SPT N-VALUE BLOWS/FOOT
VERY LOOSE	LESS THAN 3
LOOSE	3 - 8
MEDIUM	8 - 24
DENSE	24 - 40
VERY DENSE	GREATER THAN 40

STANDARD PENETRATION TEST DATA

SPOON INSIDE DIA.	1.375 INCH
SPOON OUTSIDE DIA.	2.0 INCHES
AVG. HAMMER DROP	30 INCHES
HAMMER WEIGHT	140 POUNDS

REVISIONS							Names	Dates
Date.	By	Descriptions	Date.	By	Descriptions	Drawn by	KA	11/09/17
						Checked by	AB	11/09/17
						Designed by		
						Checked by		
						Approved by		

RADISE — Infrastructure Engineers & Software Developers
LICENSE NO. - 8901

ENGINEER OF RECORD
RADISE International
4152 West Blue Heron Boulevard, Suite 1114
Riviera Beach, Florida. 33404
TEL 561-841-0103 FAX 561-841-0104
URL : http:// www.radise.net

CITY OF FORT LAUDERDALE
PUBLIC WORKS DEPARTMENT

COUNTY	CLIENT
BROWARD	HAZEN AND SAWYER

SCALE: VERTICAL N.T.S.
SCALE: HORIZONTAL N.T.S.

SHEET TITLE: SUBSURFACE PROFILES (RIVER OAKS)

PROJECT NAME: STORMWATER MASTER PLAN MODELING AND DESIGN IMPLEMENTATION

SHEET NO. 7A

RADISE PROJECT NO: 170901

	R-4	R-5	R-6
BORING NO.	R-4	R-5	R-6
ELEVATION (NAVD 88):	N/A	N/A	N/A
LATITUDE:	26.0946°	26.0950°	26.0961°
LONGITUDE:	-80.1630°	-80.1661°	-80.1608°
DATE:	10/03/2017	10/03/2017	10/02/2017
DRILLER:	P. RAMSEWACK	T. FICKLING	T. FICKLING
RIG:	CME 45	CME 45	CME 45

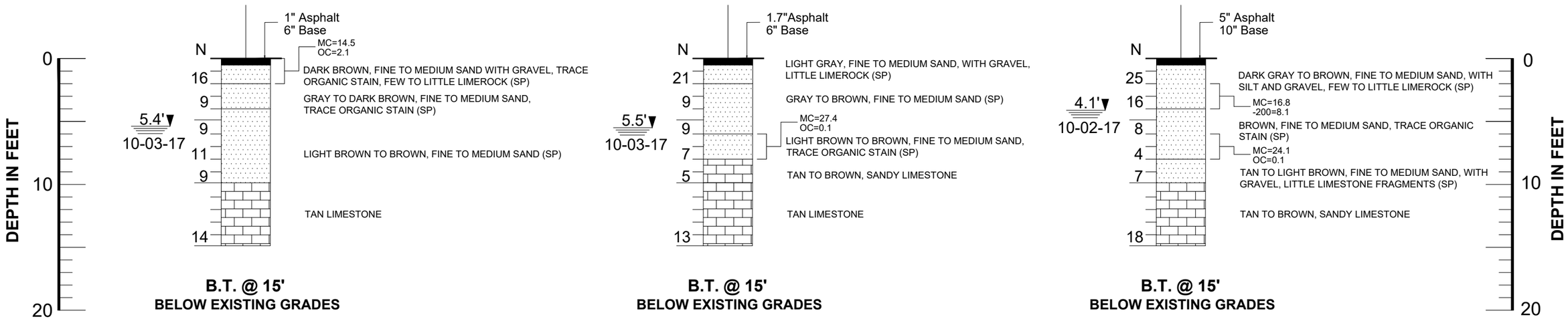

LEGEND

- ASPHALT AND BASE
- LIMESTONE
- SAND
- GRAVEL
- SILTY SAND
- ORGANIC MATERIAL
- 4.2' / 10-02-17 — GROUNDWATER DEPTH IN FEET AND DRILLING DATE
- N — STANDARD PENETRATION RESISTANCE- BLOWS PER FOOT USING AUTOMATIC HAMMER

SP, SP-SM, PT	UNIFIED SOIL CLASSIFICATION SYSTEM GROUP SYMBOL (ASTM D 2488)
R-1	STANDARD PENETRATION TEST (SPT) BORING AND NUMBER
MC	MOISTURE CONTENT (%)
-200	AMOUNT PASSING US STANDARD # 200 SIEVE (%)
OC	ORGANIC CONTENTS (%)
LL	LIQUID LIMIT (%)
PI	PLASTICITY INDEX (%)
B.T. @ 15'	BORING TERMINATED AT 15 FEET BELOW THE EXISTING GROUND SURFACE

NOTES

(1) BORING WERE DRILLED ON OCTOBER, 2017 USING A CENTRAL MINING EQUIPMENT MODEL 45 (CME 45) AUTOMATIC HAMMER DRILL RIG.

(2) STRATA BOUNDARIES ARE APPROXIMATE AND REPRESENT SOIL AND REPRESENT SOIL STRATA AT EACH TEST HOLE LOCATION ONLY. SOIL TRANSITIONS MAY BE MORE GRADUAL THAN IMPLIED.

(3) GROUNDWATER LEVELS SHOWN ON THE SUBSURFACE PROFILES REPRESENT GROUNDWATER SURFACES ON THE DATES SHOWN. GROUNDWATER LEVELS WILL FLUCTUATE THROUGHOUT THE YEAR.

(4) LONGITUDE AND LATITUDE COORDINATES WERE MEASURED IN THE FIELD USING A HAND HELD GPS UNIT.

(5) ELEVATIONS WERE NOT AVAILABLE

(6) AFTER COMPLETION OF DRILLING BOREHOLES WERE BACK FILLED WITH GROUT.

GRANULAR MATERIALS

RELATIVE DENSITY	AUTOMATIC HAMMER SPT N-VALUE BLOWS/FOOT
VERY LOOSE	LESS THAN 3
LOOSE	3 - 8
MEDIUM	8 - 24
DENSE	24 - 40
VERY DENSE	GREATER THAN 40

STANDARD PENETRATION TEST DATA

SPOON INSIDE DIA.	1.375 INCH
SPOON OUTSIDE DIA.	2.0 INCHES
AVG. HAMMER DROP	30 INCHES
HAMMER WEIGHT	140 POUNDS

REVISIONS

Date.	By	Descriptions	Date.	By	Descriptions

	Names	Dates
Drawn by	KA	11/09/17
Checked by	AB	11/09/17
Designed by		
Checked by		
Approved by		

RADISE — Infrastructure Engineers & Software Developers

LICENSE NO. - 8901

ENGINEER OF RECORD
RADISE International
4152 West Blue Heron Boulevard, Suite 1114
Riviera Beach, Florida. 33404
TEL 561-841-0103 FAX 561-841-0104
URL : http:// www.radise.net

CITY OF FORT LAUDERDALE
PUBLIC WORKS DEPARTMENT

COUNTY	CLIENT
BROWARD	HAZEN AND SAWYER

SCALE: VERTICAL N.T.S.
SCALE: HORIZONTAL N.T.S.

SHEET TITLE: SUBSURFACE PROFILES (RIVER OAKS)

PROJECT NAME: STORMWATER MASTER PLAN MODELING AND DESIGN IMPLEMENTATION

SHEET NO. 7B

RADISE PROJECT NO: 170901

	R-7	R-8	R-13
BORING NO.	R-7	R-8	R-13
ELEVATION (NAVD 88):	N/A	N/A	N/A
LATITUDE:	26.0979°	26.0994°	26.0979°
LONGITUDE:	-80.1589°	-80.1582°	-80.1550°
DATE:	10/02/2017	10/02/2017	10/02/2017
DRILLER:	P. RAMSEWACK	P. RAMSEWACK	P. RAMSEWACK
RIG:	CME 45	CME 45	CME 45

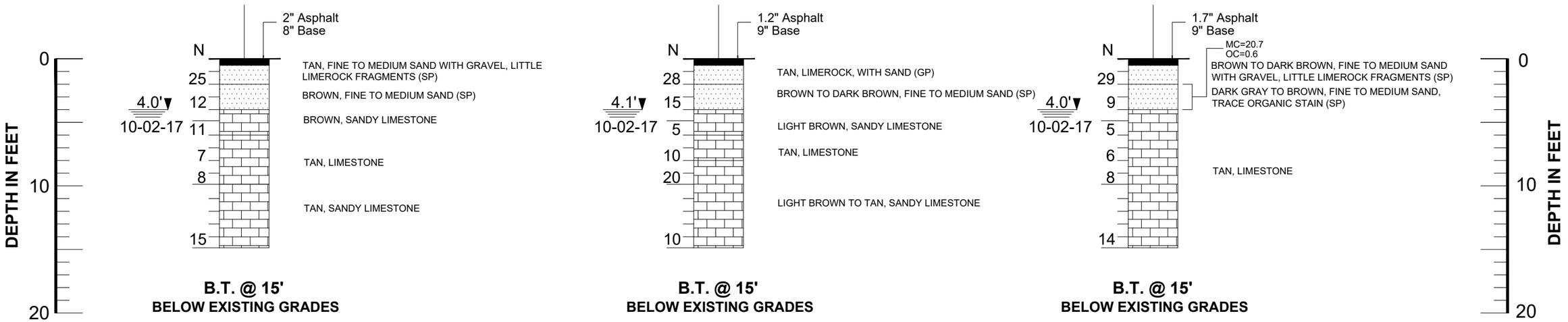

LEGEND

- ASPHALT AND BASE
- LIMESTONE
- SAND
- GRAVEL
- SILTY SAND
- ORGANIC MATERIAL
- 4.2' / 10-02-17 — GROUNDWATER DEPTH IN FEET AND DRILLING DATE
- N — STANDARD PENETRATION RESISTANCE- BLOWS PER FOOT USING AUTOMATIC HAMMER

SP, SP-SM, PT	UNIFIED SOIL CLASSIFICATION SYSTEM GROUP SYMBOL (ASTM D 2488)
R-1	STANDARD PENETRATION TEST (SPT) BORING AND NUMBER
MC	MOISTURE CONTENT (%)
-200	AMOUNT PASSING US STANDARD # 200 SIEVE (%)
OC	ORGANIC CONTENTS (%)
LL	LIQUID LIMIT (%)
PI	PLASTICITY INDEX (%)
B.T. @ 15'	BORING TERMINATED AT 15 FEET BELOW THE EXISTING GROUND SURFACE

NOTES

(1) BORING WERE DRILLED ON OCTOBER, 2017 USING A CENTRAL MINING EQUIPMENT MODEL 45 (CME 45) AUTOMATIC HAMMER DRILL RIG.

(2) STRATA BOUNDARIES ARE APPROXIMATE AND REPRESENT SOIL AND REPRESENT SOIL STRATA AT EACH TEST HOLE LOCATION ONLY. SOIL TRANSITIONS MAY BE MORE GRADUAL THAN IMPLIED.

(3) GROUNDWATER LEVELS SHOWN ON THE SUBSURFACE PROFILES REPRESENT GROUNDWATER SURFACES ON THE DATES SHOWN. GROUNDWATER LEVELS WILL FLUCTUATE THROUGHOUT THE YEAR.

(4) LONGITUDE AND LATITUDE COORDINATES WERE MEASURED IN THE FIELD USING A HAND HELD GPS UNIT.

(5) ELEVATIONS WERE NOT AVAILABLE

(6) AFTER COMPLETION OF DRILLING BOREHOLES WERE BACK FILLED WITH GROUT.

GRANULAR MATERIALS

RELATIVE DENSITY	AUTOMATIC HAMMER SPT N-VALUE BLOWS/FOOT
VERY LOOSE	LESS THAN 3
LOOSE	3 - 8
MEDIUM	8 - 24
DENSE	24 - 40
VERY DENSE	GREATER THAN 40

STANDARD PENETRATION TEST DATA

SPOON INSIDE DIA.	1.375 INCH
SPOON OUTSIDE DIA.	2.0 INCHES
AVG. HAMMER DROP	30 INCHES
HAMMER WEIGHT	140 POUNDS

REVISIONS

Date.	By	Descriptions	Date.	By	Descriptions

	Names	Dates
Drawn by	KA	11/09/17
Checked by	AB	11/09/17
Designed by		
Checked by		
Approved by		

RADISE — Infrastructure Engineers & Software Developers

LICENSE NO. - 8901

ENGINEER OF RECORD
RADISE International
4152 West Blue Heron Boulevard, Suite 1114
Riviera Beach, Florida. 33404
TEL 561-841-0103 FAX 561-841-0104
URL : http:// www.radise.net

CITY OF FORT LAUDERDALE
PUBLIC WORKS DEPARTMENT

COUNTY	CLIENT
BROWARD	HAZEN AND SAWYER

SCALE: VERTICAL N.T.S.
SCALE: HORIZONTAL N.T.S.

SHEET TITLE: SUBSURFACE PROFILES (RIVER OAKS)

PROJECT NAME: STORMWATER MASTER PLAN MODELING AND DESIGN IMPLEMENTATION

SHEET NO. 7C

RADISE PROJECT NO: 170901

	R-9	R-10
BORING NO.	R-9	R-10
ELEVATION (NAVD 88):	N/A	N/A
LATITUDE:	26.0949°	26.0947°
LONGITUDE:	-80.1679°	-80.1677°
DATE:	09/26/2017	09/26/2017
DRILLER:	T. FICKLING	T. FICKLING
RIG:	CME 45	CME 45

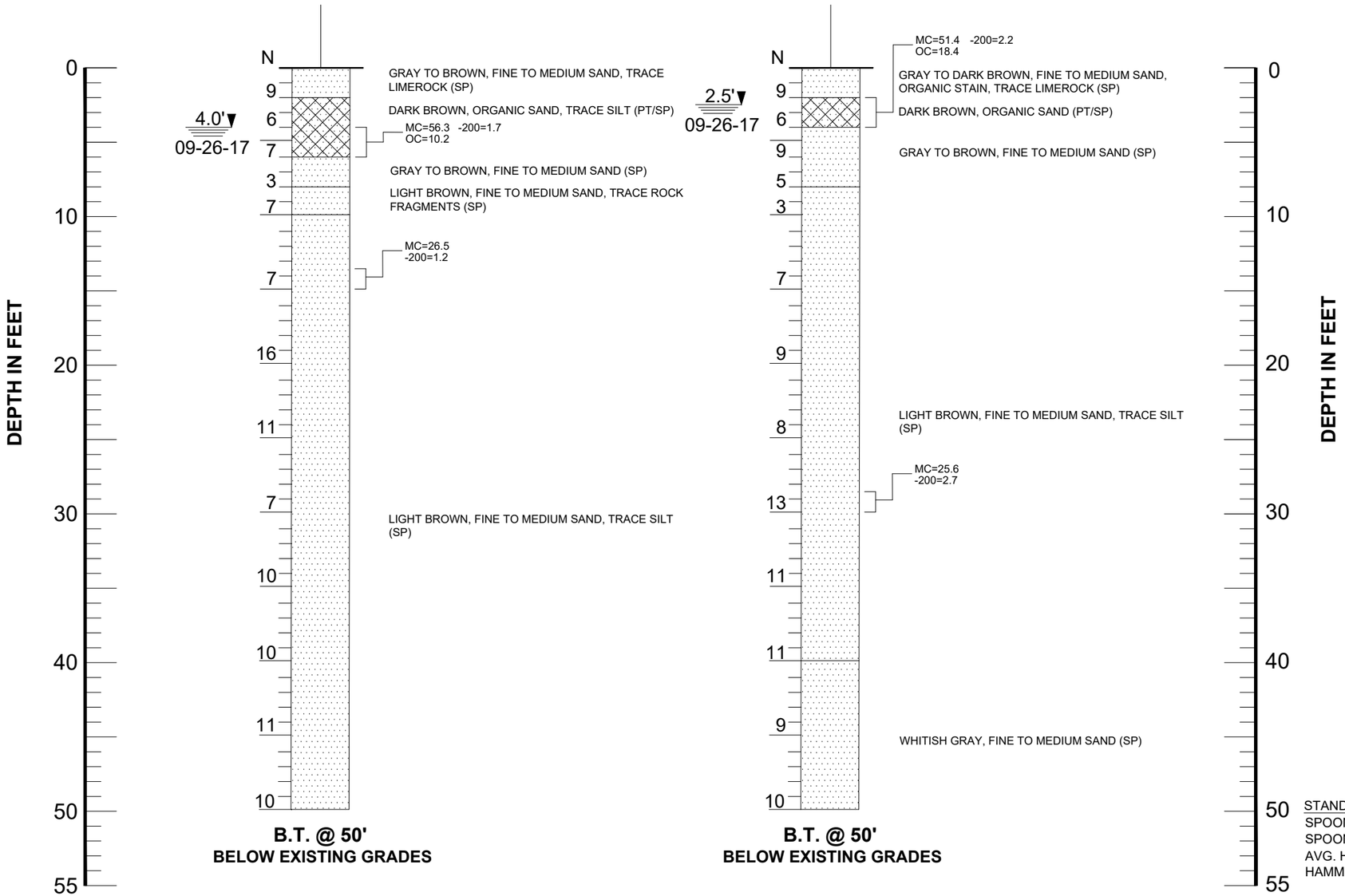

LEGEND

SAND	SHELLY SAND
SILT	LIMESTONE
ORGANIC MATERIAL	GRAVEL

1.5' / 09-21-17	GROUNDWATER DEPTH IN FEET AND DRILLING DATE
N	STANDARD PENETRATION RESISTANCE- BLOWS PER FOOT USING AUTOMATIC HAMMER
SP	UNIFIED SOIL CLASSIFICATION SYSTEM GROUP SYMBOL (ASTM D 2488)
S-9	STANDARD PENETRATION TEST (SPT) BORING AND NUMBER
MC	MOISTURE CONTENT (%)
-200	AMOUNT PASSING US STANDARD # 200 SIEVE
OC	ORGANIC CONTENTS (%)
LL	LIQUID LIMIT (%)
PI	PLASTICITY INDEX (%)
B.T. @ 50'	BORING TERMINATED AT 50 FEET BELOW THE EXISTING GROUND SURFACE

NOTES

(1) BORINGS WERE DRILLED ON SEPTEMBER AND OCTOBER, 2017 USING A CENTRAL MINING EQUIPMENT MODEL 45 (CME 45) AUTOMATIC HAMMER DRILL RIG.

(2) STRATA BOUNDARIES ARE APPROXIMATE AND REPRESENT SOIL AND REPRESENT SOIL STRATA AT EACH TEST HOLE LOCATION ONLY. SOIL TRANSITIONS MAY BE MORE GRADUAL THAN IMPLIED.

(3) GROUNDWATER LEVELS SHOWN ON THE SUBSURFACE PROFILES REPRESENT GROUNDWATER SURFACES ON THE DATES SHOWN. GROUNDWATER LEVELS WILL FLUCTUATE THROUGHOUT THE YEAR.

(4) LONGITUDE AND LATITUDE COORDINATES WERE MEASURED IN THE FIELD USING A HAND HELD GPS UNIT.

(5) ELEVATIONS WERE NOT AVAILABLE

(6) AFTER COMPLETION OF DRILLING BOREHOLES WERE BACK FILLED WITH GROUT.

STANDARD PENETRATION TEST DATA

SPOON INSIDE DIA.	1.375 INCH
SPOON OUTSIDE DIA.	2.0 INCHES
AVG. HAMMER DROP	30 INCHES
HAMMER WEIGHT	140 POUNDS

GRANULAR MATERIALS

RELATIVE DENSITY	AUTOMATIC HAMMER SPT N-VALUE BLOWS/FOOT
VERY LOOSE	LESS THAN 3
LOOSE	3 - 8
MEDIUM	8 - 24
DENSE	24 - 40
VERY DENSE	GREATER THAN 40

REVISIONS

Date.	By	Descriptions	Date.	By	Descriptions

	Names	Dates
Drawn by	ML	10/13/17
Checked by	AB	10/13/17
Designed by		
Checked by		
Approved by		

RADISE
Infrastructure Engineers & Software Developers
LICENSE NO. - 8901

ENGINEER OF RECORD
RADISE International
4152 West Blue Heron Boulevard, Suite 1114
Riviera Beach, Florida. 33404
TEL 561-841-0103 FAX 561-841-0104
URL : http:// www.radise.net

CITY OF FORT LAUDERDALE
PUBLIC WORKS DEPARTMENT

COUNTY	CLIENT
BROWARD	HAZEN AND SAWYER

SCALE: VERTICAL N.T.S.
SCALE: HORIZONTAL N.T.S.

SHEET TITLE: SUBSURFACE PROFILES (RIVER OAKS)

PROJECT NAME: STORMWATER MASTER PLAN MODELING AND DESIGN IMPLEMENTATION

SHEET NO. 7D

RADISE PROJECT NO: 170901

	R-11	R-12
BORING NO.	R-11	R-12
ELEVATION (NAVD 88):	N/A	N/A
LATITUDE:	26.0936°	26.0938°
LONGITUDE:	-80.1665°	-80.1667°
DATE:	10/04/2017	10/04/2017
DRILLER:	P. RAMSEWACK	P. RAMSEWACK
RIG:	CME 45	CME 45

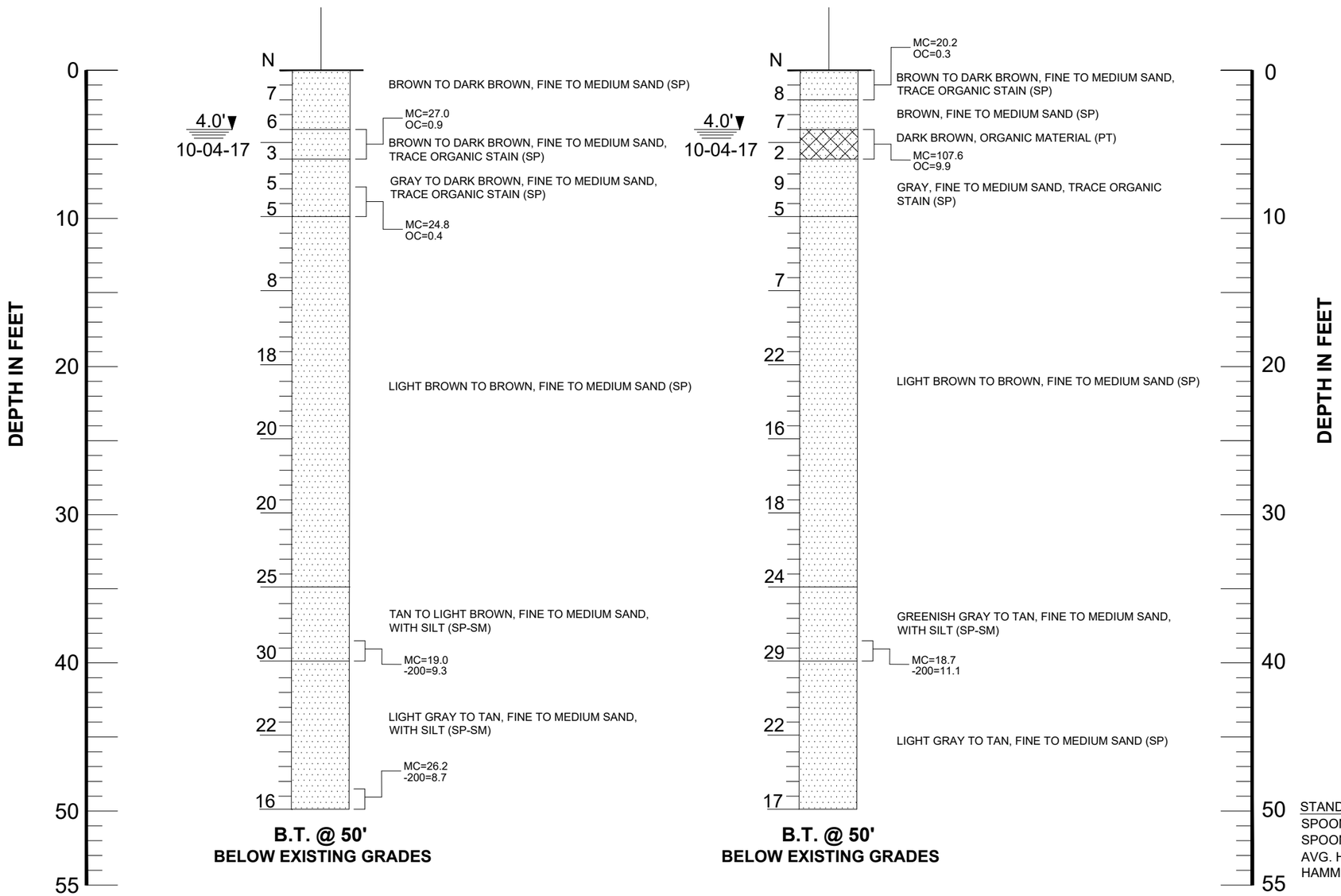

LEGEND

SAND	SHELLY SAND
SILT	LIMESTONE
ORGANIC MATERIAL	GRAVEL

1.5' ▼ 09-21-17	GROUNDWATER DEPTH IN FEET AND DRILLING DATE
N	STANDARD PENETRATION RESISTANCE- BLOWS PER FOOT USING AUTOMATIC HAMMER
SP	UNIFIED SOIL CLASSIFICATION SYSTEM GROUP SYMBOL (ASTM D 2488)
S-9	STANDARD PENETRATION TEST (SPT) BORING AND NUMBER
MC	MOISTURE CONTENT (%)
-200	AMOUNT PASSING US STANDARD # 200 SIEVE
OC	ORGANIC CONTENTS (%)
LL	LIQUID LIMIT (%)
PI	PLASTICITY INDEX (%)
B.T. @ 50'	BORING TERMINATED AT 50 FEET BELOW THE EXISTING GROUND SURFACE

NOTES

(1) BORINGS WERE DRILLED ON SEPTEMBER AND OCTOBER, 2017 USING A CENTRAL MINING EQUIPMENT MODEL 45 (CME 45) AUTOMATIC HAMMER DRILL RIG.

(2) STRATA BOUNDARIES ARE APPROXIMATE AND REPRESENT SOIL AND REPRESENT SOIL STRATA AT EACH TEST HOLE LOCATION ONLY. SOIL TRANSITIONS MAY BE MORE GRADUAL THAN IMPLIED.

(3) GROUNDWATER LEVELS SHOWN ON THE SUBSURFACE PROFILES REPRESENT GROUNDWATER SURFACES ON THE DATES SHOWN. GROUNDWATER LEVELS WILL FLUCTUATE THROUGHOUT THE YEAR.

(4) LONGITUDE AND LATITUDE COORDINATES WERE MEASURED IN THE FIELD USING A HAND HELD GPS UNIT.

(5) ELEVATIONS WERE NOT AVAILABLE

(6) AFTER COMPLETION OF DRILLING BOREHOLES WERE BACK FILLED WITH GROUT.

STANDARD PENETRATION TEST DATA

SPOON INSIDE DIA.	1.375 INCH
SPOON OUTSIDE DIA.	2.0 INCHES
AVG. HAMMER DROP	30 INCHES
HAMMER WEIGHT	140 POUNDS

GRANULAR MATERIALS

RELATIVE DENSITY	AUTOMATIC HAMMER SPT N-VALUE BLOWS/FOOT
VERY LOOSE	LESS THAN 3
LOOSE	3 - 8
MEDIUM	8 - 24
DENSE	24 - 40
VERY DENSE	GREATER THAN 40

REVISIONS

Date.	By	Descriptions	Date.	By	Descriptions

	Names	Dates
Drawn by	ML	10/13/17
Checked by	AB	10/13/17
Designed by		
Checked by		
Approved by		

RADISE
Infrastructure Engineers & Software Developers
LICENSE NO. - 8901

ENGINEER OF RECORD
RADISE International
4152 West Blue Heron Boulevard, Suite 1114
Riviera Beach, Florida. 33404
TEL 561-841-0103 FAX 561-841-0104
URL : http:// www.radise.net

CITY OF FORT LAUDERDALE
PUBLIC WORKS DEPARTMENT

COUNTY	CLIENT
BROWARD	HAZEN AND SAWYER

SCALE: VERTICAL N.T.S.
SCALE: HORIZONTAL N.T.S.

SHEET TITLE: SUBSURFACE PROFILES (RIVER OAKS)

PROJECT NAME: STORMWATER MASTER PLAN MODELING AND DESIGN IMPLEMENTATION

SHEET NO. 7E

RADISE PROJECT NO: 170901

	S-1	S-2
BORING NO.	S-1	S-2
ELEVATION (NAVD 88):	N/A	N/A
LATITUDE:	26.1188°	26.1199°
LONGITUDE:	-80.1244°	-80.1208°
DATE:	10/25/2017	10/19/2017
DRILLER:	T. FICKLING	T. FICKLING
RIG:	CME 45	CME 45

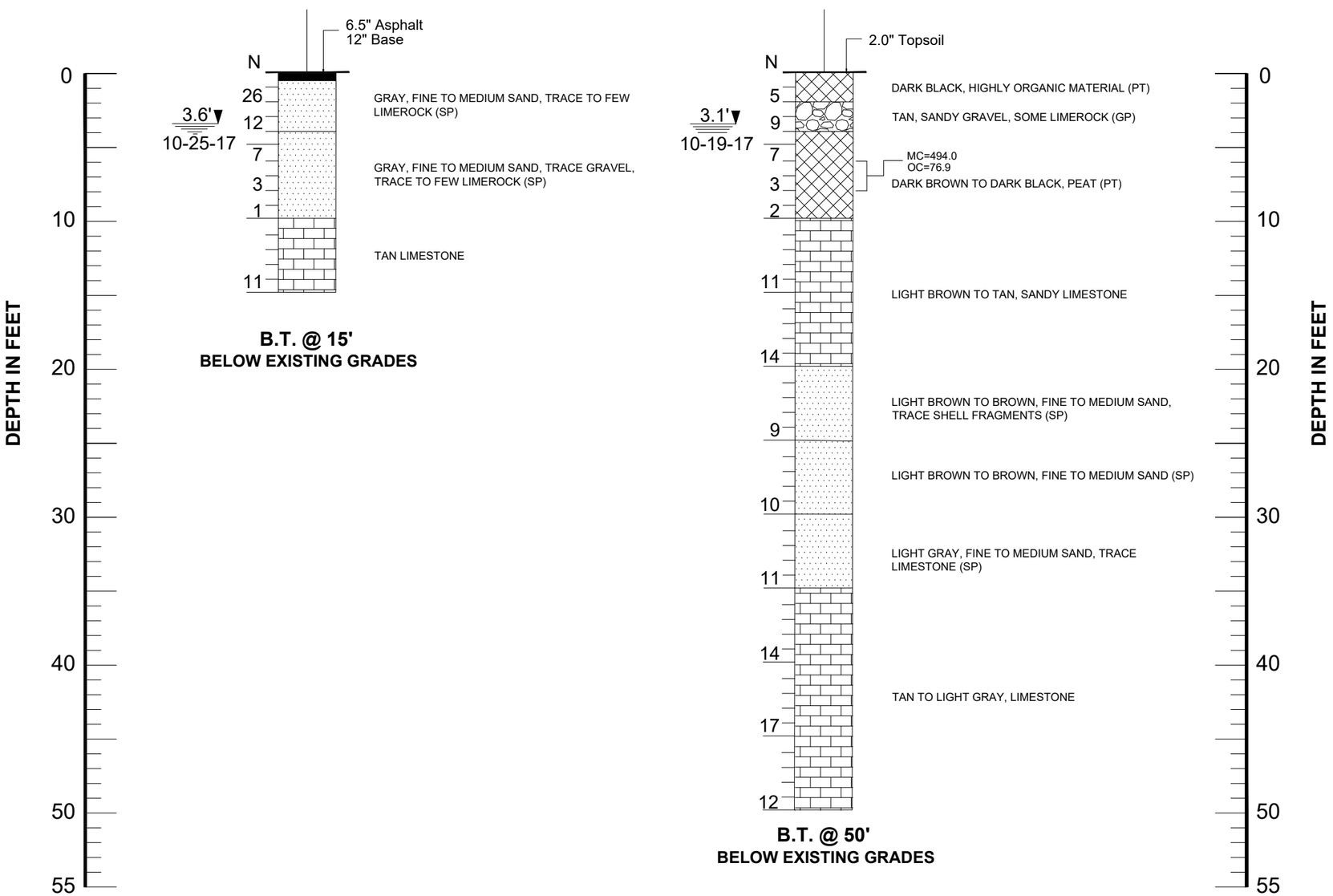

LEGEND

- ASPHALT AND BASE
- SAND
- SILT
- LIMESTONE
- GRAVEL
- ORGANIC MATERIAL

1.5' ▼ 09-21-17	GROUNDWATER DEPTH IN FEET AND DRILLING DATE
N	STANDARD PENETRATION RESISTANCE- BLOWS PER FOOT USING AUTOMATIC HAMMER
SP, SP-SM, GP, PT	UNIFIED SOIL CLASSIFICATION SYSTEM GROUP SYMBOL (ASTM D 2488)
S-1	STANDARD PENETRATION TEST (SPT) BORING AND NUMBER
MC	MOISTURE CONTENT (%)
-200	AMOUNT PASSING US STANDARD # 200 SIEVE
OC	ORGANIC CONTENTS (%)
LL	LIQUID LIMIT (%)
PI	PLASTICITY INDEX (%)
B.T. @ 50'	BORING TERMINATED AT 50 FEET BELOW THE EXISTING GROUND SURFACE

NOTES

(1) BORINGS WERE DRILLED ON SEPTEMBER AND OCTOBER, 2017 USING A CENTRAL MINING EQUIPMENT MODEL 45 (CME 45) AUTOMATIC HAMMER DRILL RIG.

(2) STRATA BOUNDARIES ARE APPROXIMATE AND REPRESENT SOIL AND REPRESENT SOIL STRATA AT EACH TEST HOLE LOCATION ONLY. SOIL TRANSITIONS MAY BE MORE GRADUAL THAN IMPLIED.

(3) GROUNDWATER LEVELS SHOWN ON THE SUBSURFACE PROFILES REPRESENT GROUNDWATER SURFACES ON THE DATES SHOWN. GROUNDWATER LEVELS WILL FLUCTUATE THROUGHOUT THE YEAR.

(4) LONGITUDE AND LATITUDE COORDINATES WERE MEASURED IN THE FIELD USING A HAND HELD GPS UNIT.

(5) ELEVATIONS WERE NOT AVAILABLE

(6) AFTER COMPLETION OF DRILLING BOREHOLES WERE BACK FILLED WITH GROUT.

STANDARD PENETRATION TEST DATA

SPOON INSIDE DIA.	1.375 INCH
SPOON OUTSIDE DIA.	2.0 INCHES
AVG. HAMMER DROP	30 INCHES
HAMMER WEIGHT	140 POUNDS

GRANULAR MATERIALS

RELATIVE DENSITY	AUTOMATIC HAMMER SPT N-VALUE BLOWS/FOOT
VERY LOOSE	LESS THAN 3
LOOSE	3 - 8
MEDIUM	8 - 24
DENSE	24 - 40
VERY DENSE	GREATER THAN 40

REVISIONS

Date.	By	Descriptions	Date.	By	Descriptions

	Names	Dates
Drawn by	KA	11/06/17
Checked by	AB	11/06/17
Designed by		
Checked by		
Approved by		

RADISE Infrastructure Engineers & Software Developers

LICENSE NO. - 8901

ENGINEER OF RECORD
RADISE International
4152 West Blue Heron Boulevard, Suite 1114
Riviera Beach, Florida. 33404
TEL 561-841-0103 FAX 561-841-0104
URL : http:// www.radise.net

CITY OF FORT LAUDERDALE
PUBLIC WORKS DEPARTMENT

COUNTY	CLIENT
BROWARD	HAZEN AND SAWYER

SCALE: VERTICAL N.T.S.
SCALE: HORIZONTAL N.T.S.

SHEET TITLE: SUBSURFACE PROFILES (SOUTHEAST ISLES)

PROJECT NAME: STORMWATER MASTER PLAN MODELING AND DESIGN IMPLEMENTATION

SHEET NO. 8A

RADISE PROJECT NO: 170901

	S-3	S-4	S-5
BORING NO.	S-3	S-4	S-5
ELEVATION (NAVD 88):	N/A	N/A	N/A
LATITUDE:	26.1196°	26.1199°	26.1200°
LONGITUDE:	-80.1209°	-80.1169°	-80.1149°
DATE:	10/25/2017	10/25/2017	10/23/2017
DRILLER:	T. FICKLING	T. FICKLING	T. FICKLING
RIG:	CME 45	CME 45	CME 45

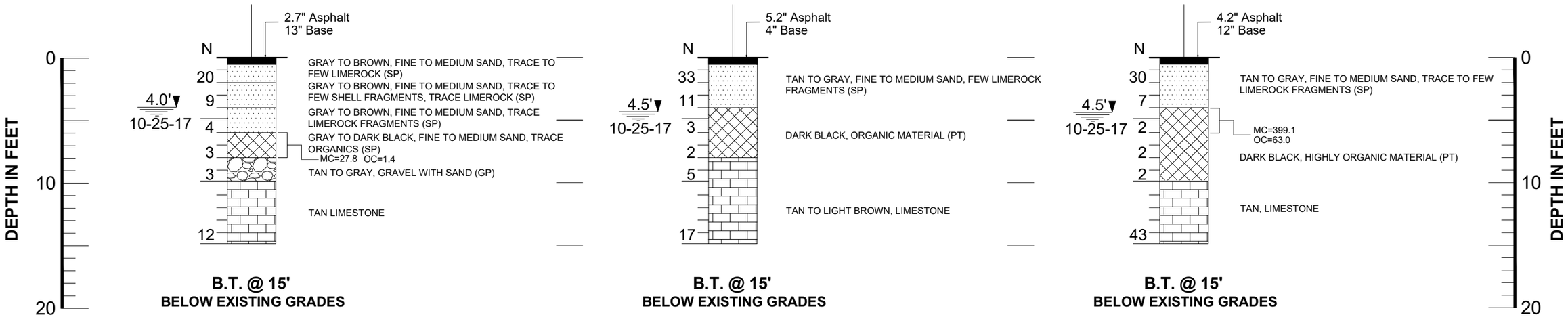

LEGEND

- ASPHALT AND BASE
- SAND
- SILT
- LIMESTONE
- GRAVEL
- ORGANIC MATERIAL
- 5.5' / 10-12-17 — GROUNDWATER DEPTH IN FEET AND DRILLING DATE
- N — STANDARD PENETRATION RESISTANCE- BLOWS PER FOOT USING AUTOMATIC HAMMER

SP, SP-SM, GP, PT	UNIFIED SOIL CLASSIFICATION SYSTEM GROUP SYMBOL (ASTM D 2488)
S-1	STANDARD PENETRATION TEST (SPT) BORING AND NUMBER
MC	MOISTURE CONTENT (%)
-200	AMOUNT PASSING US STANDARD # 200 SIEVE (%)
OC	ORGANIC CONTENTS (%)
LL	LIQUID LIMIT (%)
PI	PLASTICITY INDEX (%)
B.T. @ 15'	BORING TERMINATED AT 15 FEET BELOW THE EXISTING GROUND SURFACE

NOTES

(1) BORINGS WERE DRILLED ON SEPTEMBER AND OCTOBER, 2017 USING A CENTRAL MINING EQUIPMENT MODEL 45 (CME 45) AUTOMATIC HAMMER DRILL RIG.

(2) STRATA BOUNDARIES ARE APPROXIMATE AND REPRESENT SOIL AND REPRESENT SOIL STRATA AT EACH TEST HOLE LOCATION ONLY. SOIL TRANSITIONS MAY BE MORE GRADUAL THAN IMPLIED.

(3) GROUNDWATER LEVELS SHOWN ON THE SUBSURFACE PROFILES REPRESENT GROUNDWATER SURFACES ON THE DATES SHOWN. GROUNDWATER LEVELS WILL FLUCTUATE THROUGHOUT THE YEAR.

(4) LONGITUDE AND LATITUDE COORDINATES WERE MEASURED IN THE FIELD USING A HAND HELD GPS UNIT.

(5) ELEVATIONS WERE NOT AVAILABLE

(6) AFTER COMPLETION OF DRILLING BOREHOLES WERE BACK FILLED WITH GROUT.

GRANULAR MATERIALS

RELATIVE DENSITY	AUTOMATIC HAMMER SPT N-VALUE BLOWS/FOOT
VERY LOOSE	LESS THAN 3
LOOSE	3 - 8
MEDIUM	8 - 24
DENSE	24 - 40
VERY DENSE	GREATER THAN 40

STANDARD PENETRATION TEST DATA

SPOON INSIDE DIA.	1.375 INCH
SPOON OUTSIDE DIA.	2.0 INCHES
AVG. HAMMER DROP	30 INCHES
HAMMER WEIGHT	140 POUNDS

REVISIONS

Date.	By	Descriptions	Date.	By	Descriptions

	Names	Dates
Drawn by	KA	11/06/17
Checked by	AB	11/06/17
Designed by		
Checked by		
Approved by		

RADISE — Infrastructure Engineers & Software Developers — LICENSE NO. - 8901

ENGINEER OF RECORD
RADISE International
4152 West Blue Heron Boulevard, Suite 1114
Riviera Beach, Florida. 33404
TEL 561-841-0103 FAX 561-841-0104
URL : http:// www.radise.net

CITY OF FORT LAUDERDALE
PUBLIC WORKS DEPARTMENT

COUNTY	CLIENT
BROWARD	HAZEN AND SAWYER

SCALE: VERTICAL N.T.S.
SCALE: HORIZONTAL N.T.S.

SHEET TITLE: SUBSURFACE PROFILES (SOUTHEAST ISLES)

PROJECT NAME: STORMWATER MASTER PLAN MODELING AND DESIGN IMPLEMENTATION

SHEET NO. 8B

RADISE PROJECT NO: 170901

	S-6	S-7
BORING NO.	S-6	S-7
ELEVATION (NAVD 88):	N/A	N/A
LATITUDE:	26.1198°	26.1196°
LONGITUDE:	-80.1115°	-80.1114°
DATE:	10/21/2017	10/21/2017
DRILLER:	T. FICKLING	T. FICKLING
RIG:	CME 45	CME 45

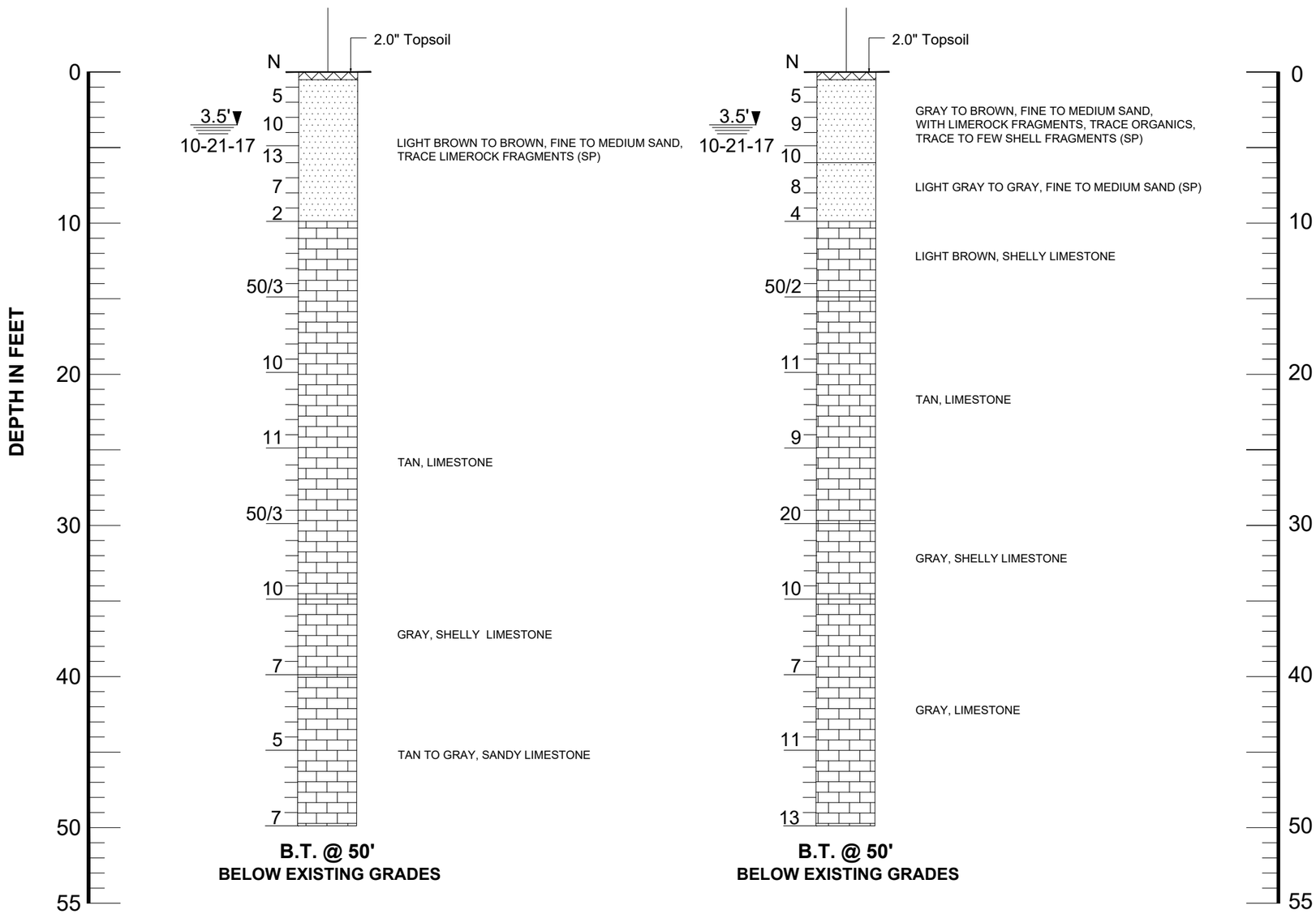

LEGEND

ASPHALT AND BASE	LIMESTONE
SAND	GRAVEL
SILT	ORGANIC MATERIAL

1.5' ▼ 09-21-17	GROUNDWATER DEPTH IN FEET AND DRILLING DATE
N	STANDARD PENETRATION RESISTANCE- BLOWS PER FOOT USING AUTOMATIC HAMMER
SP, SP-SM, GP, PT	UNIFIED SOIL CLASSIFICATION SYSTEM GROUP SYMBOL (ASTM D 2488)
S-1	STANDARD PENETRATION TEST (SPT) BORING AND NUMBER
MC	MOISTURE CONTENT (%)
-200	AMOUNT PASSING US STANDARD # 200 SIEVE
OC	ORGANIC CONTENTS (%)
LL	LIQUID LIMIT (%)
PI	PLASTICITY INDEX (%)
B.T. @ 50'	BORING TERMINATED AT 50 FEET BELOW THE EXISTING GROUND SURFACE

NOTES

(1) BORINGS WERE DRILLED ON SEPTEMBER AND OCTOBER, 2017 USING A CENTRAL MINING EQUIPMENT MODEL 45 (CME 45) AUTOMATIC HAMMER DRILL RIG.

(2) STRATA BOUNDARIES ARE APPROXIMATE AND REPRESENT SOIL AND REPRESENT SOIL STRATA AT EACH TEST HOLE LOCATION ONLY. SOIL TRANSITIONS MAY BE MORE GRADUAL THAN IMPLIED.

(3) GROUNDWATER LEVELS SHOWN ON THE SUBSURFACE PROFILES REPRESENT GROUNDWATER SURFACES ON THE DATES SHOWN. GROUNDWATER LEVELS WILL FLUCTUATE THROUGHOUT THE YEAR.

(4) LONGITUDE AND LATITUDE COORDINATES WERE MEASURED IN THE FIELD USING A HAND HELD GPS UNIT.

(5) ELEVATIONS WERE NOT AVAILABLE

(6) AFTER COMPLETION OF DRILLING BOREHOLES WERE BACK FILLED WITH GROUT.

STANDARD PENETRATION TEST DATA

SPOON INSIDE DIA.	1.375 INCH
SPOON OUTSIDE DIA.	2.0 INCHES
AVG. HAMMER DROP	30 INCHES
HAMMER WEIGHT	140 POUNDS

GRANULAR MATERIALS

RELATIVE DENSITY	AUTOMATIC HAMMER SPT N-VALUE BLOWS/FOOT
VERY LOOSE	LESS THAN 3
LOOSE	3 - 8
MEDIUM	8 - 24
DENSE	24 - 40
VERY DENSE	GREATER THAN 40

REVISIONS

Date.	By	Descriptions	Date.	By	Descriptions

	Names	Dates
Drawn by	ML	10/13/17
Checked by	AB	10/13/17
Designed by		
Checked by		
Approved by		

RADISE
Infrastructure Engineers & Software Developers
LICENSE NO. - 8901

ENGINEER OF RECORD
RADISE International
4152 West Blue Heron Boulevard, Suite 1114
Riviera Beach, Florida. 33404
TEL 561-841-0103 FAX 561-841-0104
URL : http:// www.radise.net

CITY OF FORT LAUDERDALE
PUBLIC WORKS DEPARTMENT

COUNTY	CLIENT
BROWARD	HAZEN AND SAWYER

SCALE: VERTICAL N.T.S.
SCALE: HORIZONTAL N.T.S.

SHEET TITLE: SUBSURFACE PROFILES (SOUTHEAST ISLES)

PROJECT NAME: STORMWATER MASTER PLAN MODELING AND DESIGN IMPLEMENTATION

SHEET NO. 8C

RADISE PROJECT NO: 170901

	S-8	S-9
BORING NO.	S-8	S-9
ELEVATION (NAVD 88):	N/A	N/A
LATITUDE:	26.1171°	26.1178°
LONGITUDE:	-80.1129°	-80.1163°
DATE:	09/27/2017	09/21/2017
DRILLER:	T. FICKLING	T. FICKLING
RIG:	CME 45	CME 45

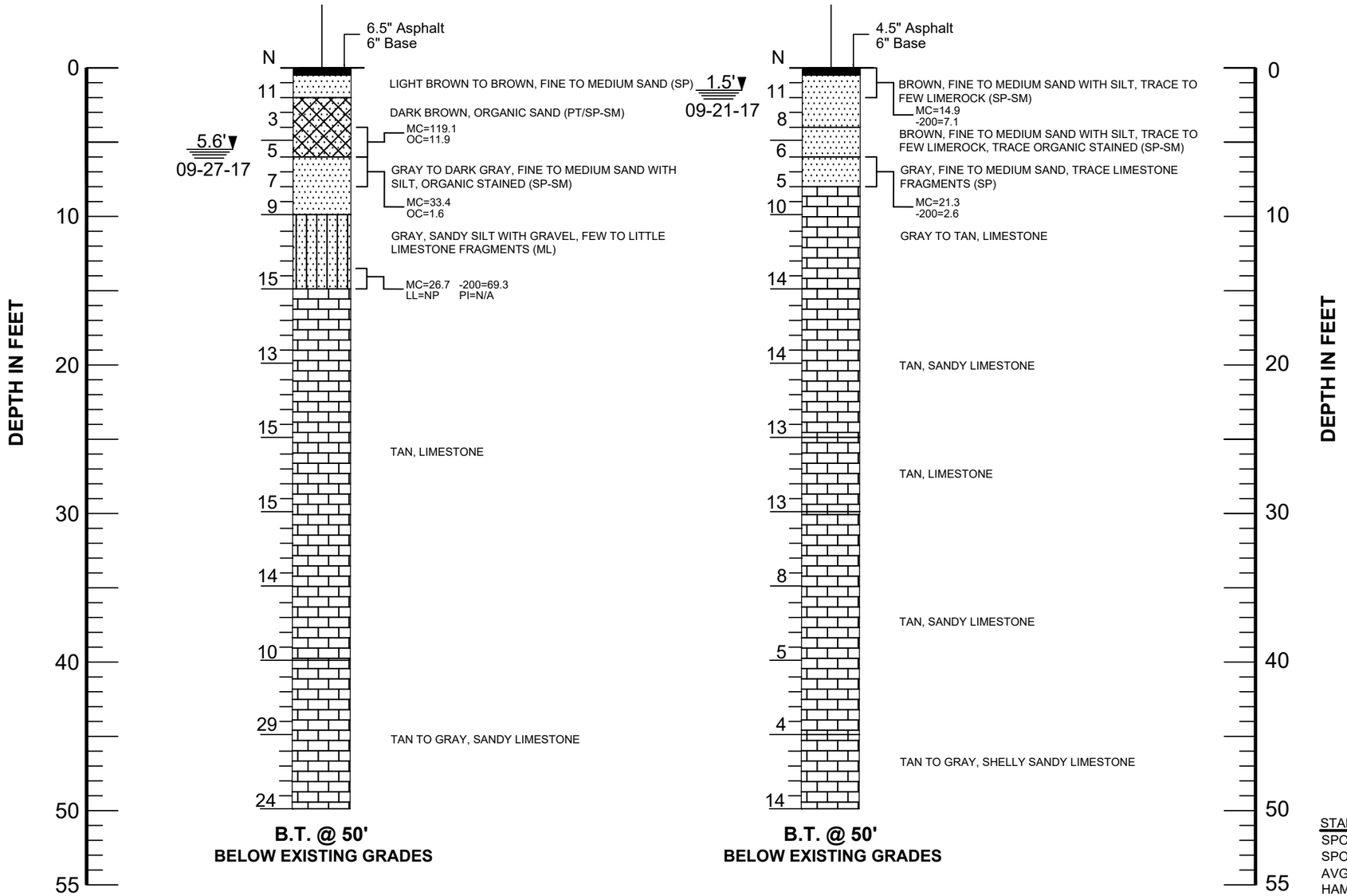

LEGEND

ASPHALT AND BASE	LIMESTONE
SAND	GRAVEL
SILT	ORGANIC MATERIAL

1.5' / 09-21-17	GROUNDWATER DEPTH IN FEET AND DRILLING DATE
N	STANDARD PENETRATION RESISTANCE- BLOWS PER FOOT USING AUTOMATIC HAMMER
SP, SP-SM, GP, PT	UNIFIED SOIL CLASSIFICATION SYSTEM GROUP SYMBOL (ASTM D 2488)
S-1	STANDARD PENETRATION TEST (SPT) BORING AND NUMBER
MC	MOISTURE CONTENT (%)
-200	AMOUNT PASSING US STANDARD # 200 SIEVE
OC	ORGANIC CONTENTS (%)
LL	LIQUID LIMIT (%)
PI	PLASTICITY INDEX (%)
B.T. @ 50'	BORING TERMINATED AT 50 FEET BELOW THE EXISTING GROUND SURFACE

NOTES

(1) BORINGS WERE DRILLED ON SEPTEMBER AND OCTOBER, 2017 USING A CENTRAL MINING EQUIPMENT MODEL 45 (CME 45) AUTOMATIC HAMMER DRILL RIG.

(2) STRATA BOUNDARIES ARE APPROXIMATE AND REPRESENT SOIL AND REPRESENT SOIL STRATA AT EACH TEST HOLE LOCATION ONLY. SOIL TRANSITIONS MAY BE MORE GRADUAL THAN IMPLIED.

(3) GROUNDWATER LEVELS SHOWN ON THE SUBSURFACE PROFILES REPRESENT GROUNDWATER SURFACES ON THE DATES SHOWN. GROUNDWATER LEVELS WILL FLUCTUATE THROUGHOUT THE YEAR.

(4) LONGITUDE AND LATITUDE COORDINATES WERE MEASURED IN THE FIELD USING A HAND HELD GPS UNIT.

(5) ELEVATIONS WERE NOT AVAILABLE

(6) AFTER COMPLETION OF DRILLING BOREHOLES WERE BACK FILLED WITH GROUT.

STANDARD PENETRATION TEST DATA

SPOON INSIDE DIA.	1.375 INCH
SPOON OUTSIDE DIA.	2.0 INCHES
AVG. HAMMER DROP	30 INCHES
HAMMER WEIGHT	140 POUNDS

GRANULAR MATERIALS

RELATIVE DENSITY	AUTOMATIC HAMMER SPT N-VALUE BLOWS/FOOT
VERY LOOSE	LESS THAN 3
LOOSE	3 - 8
MEDIUM	8 - 24
DENSE	24 - 40
VERY DENSE	GREATER THAN 40

REVISIONS

Date.	By	Descriptions	Date.	By	Descriptions

	Names	Dates
Drawn by	ML	10/13/17
Checked by	AB	10/13/17
Designed by		
Checked by		
Approved by		

RADISE
Infrastructure Engineers & Software Developers
LICENSE NO. - 8901

ENGINEER OF RECORD
RADISE International
4152 West Blue Heron Boulevard, Suite 1114
Riviera Beach, Florida. 33404
TEL 561-841-0103 FAX 561-841-0104
URL : http:// www.radise.net

CITY OF FORT LAUDERDALE
PUBLIC WORKS DEPARTMENT

COUNTY	CLIENT
BROWARD	HAZEN AND SAWYER

SCALE: VERTICAL N.T.S.
SCALE: HORIZONTAL N.T.S.

SHEET TITLE: SUBSURFACE PROFILES (SEAWALLS)

PROJECT NAME: STORMWATER MASTER PLAN MODELING AND DESIGN IMPLEMENTATION

SHEET NO. 9A

RADISE PROJECT NO: 170901

	S-10	S-11
BORING NO.	S-10	S-11
ELEVATION (NAVD 88):	N/A	N/A
LATITUDE:	26.1184°	26.1190°
LONGITUDE:	-80.1163°	-80.1163°
DATE:	09/21/2017	09/20/2017
DRILLER:	T. FICKLING	T. FICKLING
RIG:	CME 45	CME 45

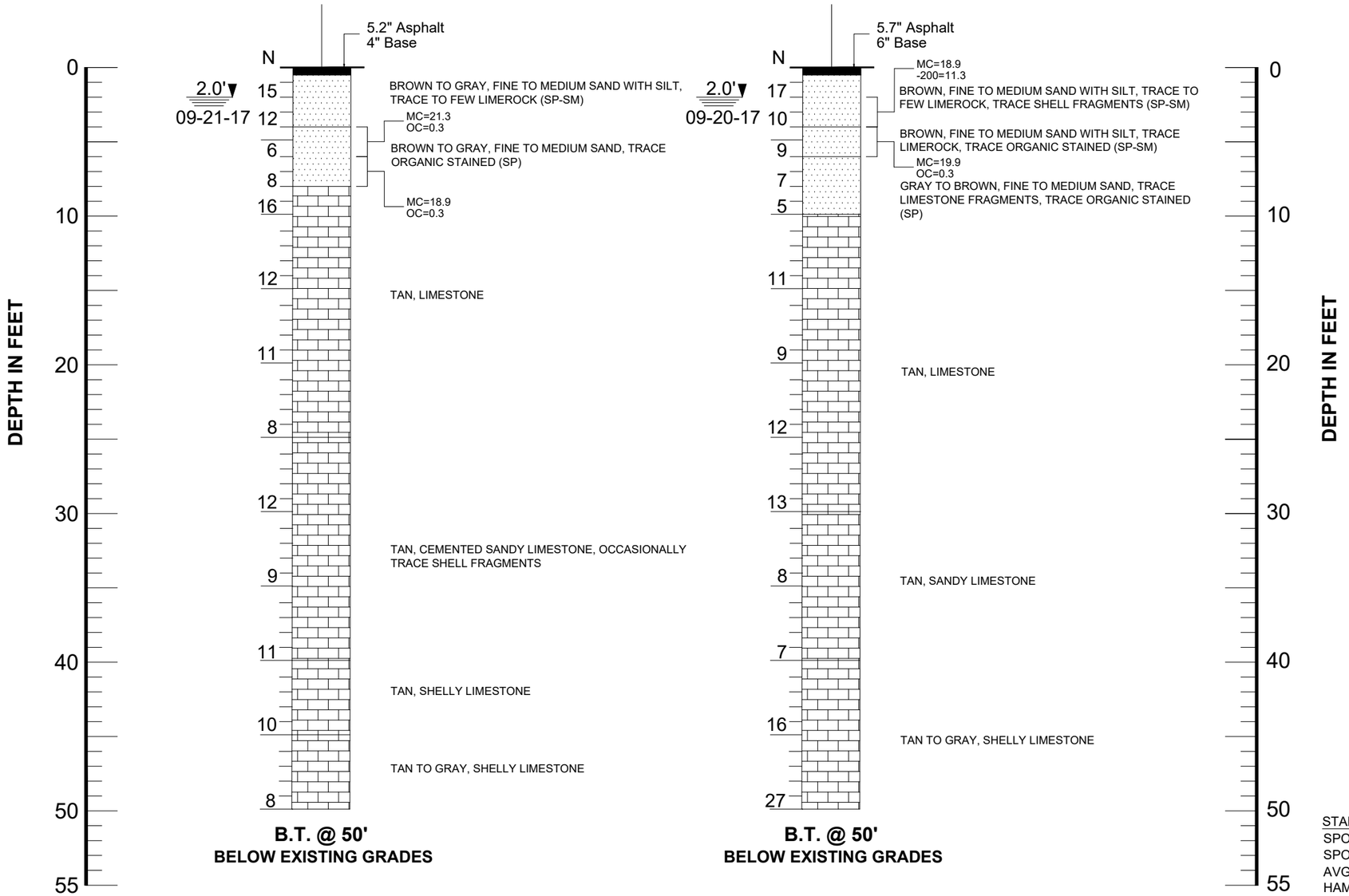

LEGEND

- ASPHALT AND BASE
- SAND
- SILT
- LIMESTONE
- GRAVEL
- ORGANIC MATERIAL

1.5' ▼ 09-21-17	GROUNDWATER DEPTH IN FEET AND DRILLING DATE
N	STANDARD PENETRATION RESISTANCE- BLOWS PER FOOT USING AUTOMATIC HAMMER
SP, SP-SM, GP, PT	UNIFIED SOIL CLASSIFICATION SYSTEM GROUP SYMBOL (ASTM D 2488)
S-1	STANDARD PENETRATION TEST (SPT) BORING AND NUMBER
MC	MOISTURE CONTENT (%)
-200	AMOUNT PASSING US STANDARD # 200 SIEVE
OC	ORGANIC CONTENTS (%)
LL	LIQUID LIMIT (%)
PI	PLASTICITY INDEX (%)
B.T. @ 50'	BORING TERMINATED AT 50 FEET BELOW THE EXISTING GROUND SURFACE

NOTES

(1) BORINGS WERE DRILLED ON SEPTEMBER AND OCTOBER, 2017 USING A CENTRAL MINING EQUIPMENT MODEL 45 (CME 45) AUTOMATIC HAMMER DRILL RIG.

(2) STRATA BOUNDARIES ARE APPROXIMATE AND REPRESENT SOIL AND REPRESENT SOIL STRATA AT EACH TEST HOLE LOCATION ONLY. SOIL TRANSITIONS MAY BE MORE GRADUAL THAN IMPLIED.

(3) GROUNDWATER LEVELS SHOWN ON THE SUBSURFACE PROFILES REPRESENT GROUNDWATER SURFACES ON THE DATES SHOWN. GROUNDWATER LEVELS WILL FLUCTUATE THROUGHOUT THE YEAR.

(4) LONGITUDE AND LATITUDE COORDINATES WERE MEASURED IN THE FIELD USING A HAND HELD GPS UNIT.

(5) ELEVATIONS WERE NOT AVAILABLE

(6) AFTER COMPLETION OF DRILLING BOREHOLES WERE BACK FILLED WITH GROUT.

STANDARD PENETRATION TEST DATA

SPOON INSIDE DIA.	1.375 INCH
SPOON OUTSIDE DIA.	2.0 INCHES
AVG. HAMMER DROP	30 INCHES
HAMMER WEIGHT	140 POUNDS

GRANULAR MATERIALS

RELATIVE DENSITY	AUTOMATIC HAMMER SPT N-VALUE BLOWS/FOOT
VERY LOOSE	LESS THAN 3
LOOSE	3 - 8
MEDIUM	8 - 24
DENSE	24 - 40
VERY DENSE	GREATER THAN 40

REVISIONS

Date.	By	Descriptions	Date.	By	Descriptions

	Names	Dates
Drawn by	ML	10/13/17
Checked by	AB	10/13/17
Designed by		
Checked by		
Approved by		

RADISE
Infrastructure Engineers & Software Developers
LICENSE NO. - 8901

ENGINEER OF RECORD
RADISE International
4152 West Blue Heron Boulevard, Suite 1114
Riviera Beach, Florida. 33404
TEL 561-841-0103 FAX 561-841-0104
URL : http:// www.radise.net

CITY OF FORT LAUDERDALE
PUBLIC WORKS DEPARTMENT

COUNTY	CLIENT
BROWARD	HAZEN AND SAWYER

SCALE: VERTICAL N.T.S.
SCALE: HORIZONTAL N.T.S.

SHEET TITLE: SUBSURFACE PROFILES (SEAWALLS)

PROJECT NAME: STORMWATER MASTER PLAN MODELING AND DESIGN IMPLEMENTATION

SHEET NO. 9B

RADISE PROJECT NO: 170901

	S-12	S-13
BORING NO.	S-12	S-13
ELEVATION (NAVD 88):	N/A	N/A
LATITUDE:	26.1196°	26.1199°
LONGITUDE:	-80.1163°	-80.1179°
DATE:	09/20/2017	09/17/2017
DRILLER:	T. FICKLING	T. FICKLING
RIG:	CME 45	CME 45

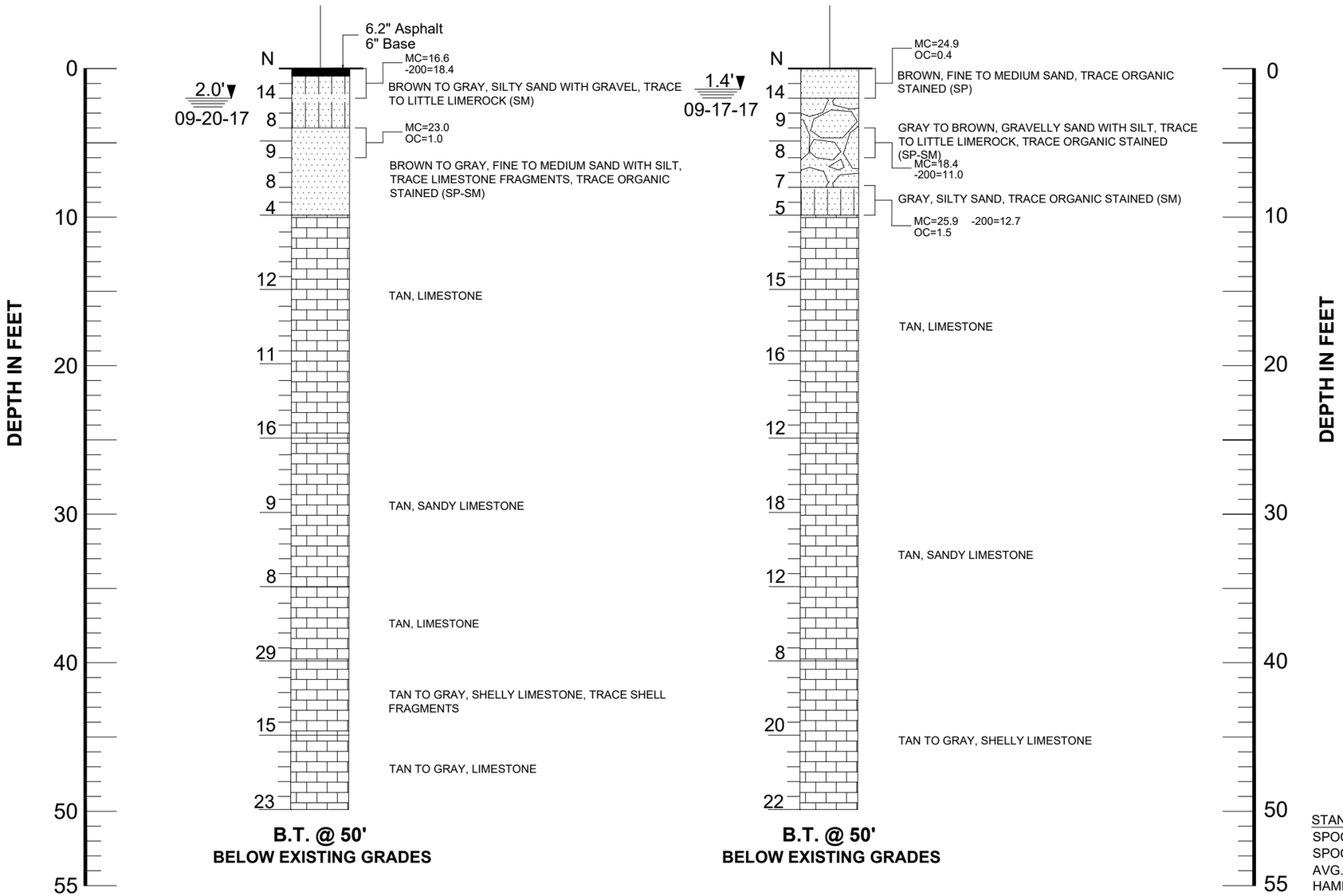

LEGEND

- ASPHALT AND BASE
- SAND
- SILT
- LIMESTONE
- GRAVEL
- ORGANIC MATERIAL

1.5' ▼ 09-21-17	GROUNDWATER DEPTH IN FEET AND DRILLING DATE
N	STANDARD PENETRATION RESISTANCE- BLOWS PER FOOT USING AUTOMATIC HAMMER
SP, SP-SM, GP, PT	UNIFIED SOIL CLASSIFICATION SYSTEM GROUP SYMBOL (ASTM D 2488)
S-1	STANDARD PENETRATION TEST (SPT) BORING AND NUMBER
MC	MOISTURE CONTENT (%)
-200	AMOUNT PASSING US STANDARD # 200 SIEVE
OC	ORGANIC CONTENTS (%)
LL	LIQUID LIMIT (%)
PI	PLASTICITY INDEX (%)
B.T. @ 50'	BORING TERMINATED AT 50 FEET BELOW THE EXISTING GROUND SURFACE

NOTES

(1) BORINGS WERE DRILLED ON SEPTEMBER AND OCTOBER, 2017 USING A CENTRAL MINING EQUIPMENT MODEL 45 (CME 45) AUTOMATIC HAMMER DRILL RIG.

(2) STRATA BOUNDARIES ARE APPROXIMATE AND REPRESENT SOIL AND REPRESENT SOIL STRATA AT EACH TEST HOLE LOCATION ONLY. SOIL TRANSITIONS MAY BE MORE GRADUAL THAN IMPLIED.

(3) GROUNDWATER LEVELS SHOWN ON THE SUBSURFACE PROFILES REPRESENT GROUNDWATER SURFACES ON THE DATES SHOWN. GROUNDWATER LEVELS WILL FLUCTUATE THROUGHOUT THE YEAR.

(4) LONGITUDE AND LATITUDE COORDINATES WERE MEASURED IN THE FIELD USING A HAND HELD GPS UNIT.

(5) ELEVATIONS WERE NOT AVAILABLE

(6) AFTER COMPLETION OF DRILLING BOREHOLES WERE BACK FILLED WITH GROUT.

STANDARD PENETRATION TEST DATA

SPOON INSIDE DIA.	1.375 INCH
SPOON OUTSIDE DIA.	2.0 INCHES
AVG. HAMMER DROP	30 INCHES
HAMMER WEIGHT	140 POUNDS

GRANULAR MATERIALS

RELATIVE DENSITY	AUTOMATIC HAMMER SPT N-VALUE BLOWS/FOOT
VERY LOOSE	LESS THAN 3
LOOSE	3 - 8
MEDIUM	8 - 24
DENSE	24 - 40
VERY DENSE	GREATER THAN 40

REVISIONS

Date.	By	Descriptions	Date.	By	Descriptions

	Names	Dates
Drawn by	ML	10/13/17
Checked by	AB	10/13/17
Designed by		
Checked by		
Approved by		

RADISE
Infrastructure Engineers & Software Developers
LICENSE NO. - 8901

ENGINEER OF RECORD
RADISE International
4152 West Blue Heron Boulevard, Suite 1114
Riviera Beach, Florida. 33404
TEL 561-841-0103 FAX 561-841-0104
URL : http:// www.radise.net

CITY OF FORT LAUDERDALE
PUBLIC WORKS DEPARTMENT

COUNTY	CLIENT
BROWARD	HAZEN AND SAWYER

SCALE: VERTICAL N.T.S.
SCALE: HORIZONTAL N.T.S.

SHEET TITLE: SUBSURFACE PROFILES (SEAWALLS)

PROJECT NAME: STORMWATER MASTER PLAN MODELING AND DESIGN IMPLEMENTATION

SHEET NO. 9C

RADISE PROJECT NO: 170901

	S-14	S-15
BORING NO.	S-14	S-15
ELEVATION (NAVD 88):	N/A	N/A
LATITUDE:	26.1198°	26.1198°
LONGITUDE:	-80.1189°	-80.1200°
DATE:	09/28/2017	09/28/2017
DRILLER:	T. FICKLING	T. FICKLING
RIG:	CME 45	CME 45

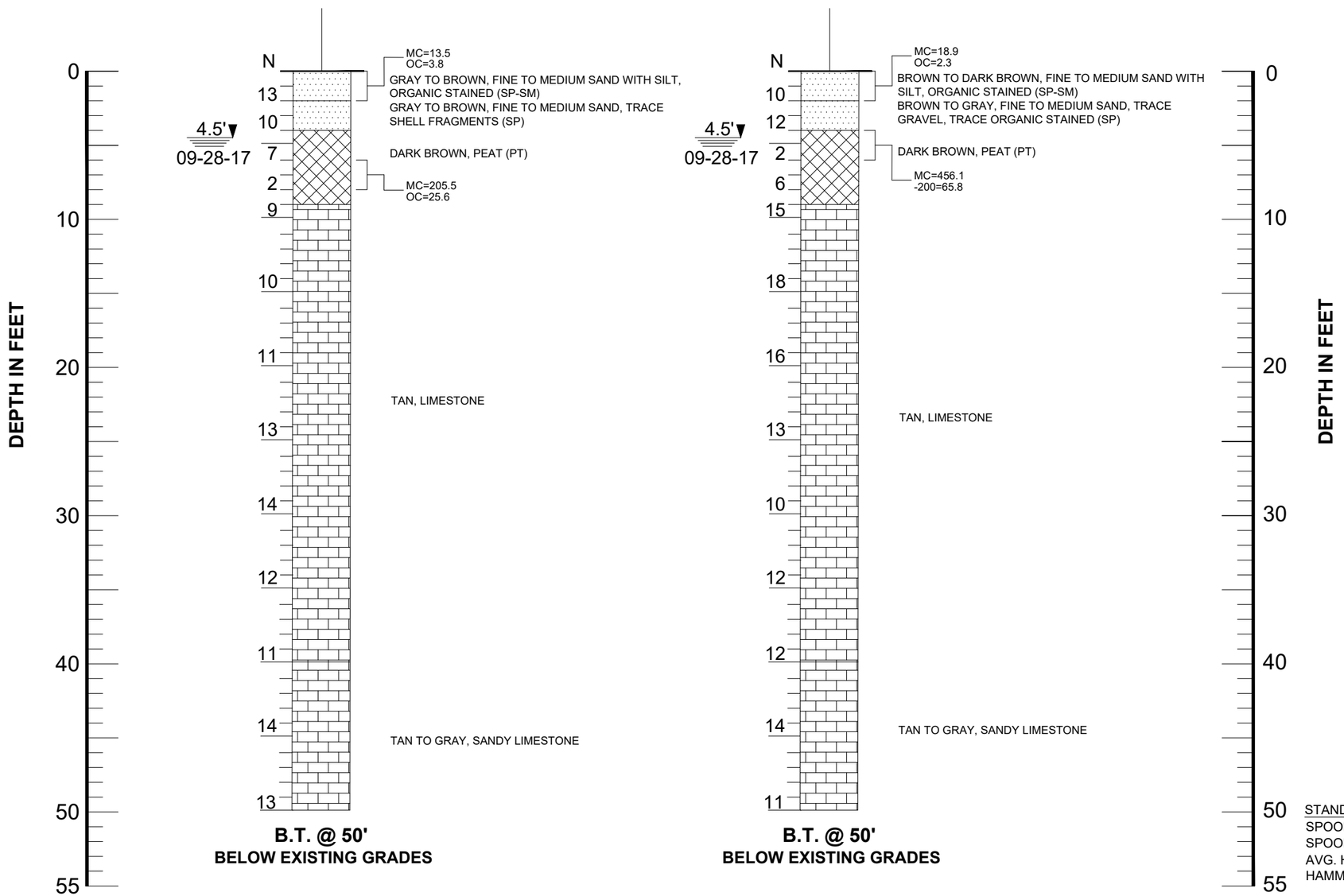

LEGEND

- ASPHALT AND BASE
- SAND
- SILT
- LIMESTONE
- GRAVEL
- ORGANIC MATERIAL

1.5' ▼ 09-21-17	GROUNDWATER DEPTH IN FEET AND DRILLING DATE
N	STANDARD PENETRATION RESISTANCE- BLOWS PER FOOT USING AUTOMATIC HAMMER
SP, SP-SM, GP, PT	UNIFIED SOIL CLASSIFICATION SYSTEM GROUP SYMBOL (ASTM D 2488)
S-1	STANDARD PENETRATION TEST (SPT) BORING AND NUMBER
MC	MOISTURE CONTENT (%)
-200	AMOUNT PASSING US STANDARD # 200 SIEVE
OC	ORGANIC CONTENTS (%)
LL	LIQUID LIMIT (%)
PI	PLASTICITY INDEX (%)
B.T. @ 50'	BORING TERMINATED AT 50 FEET BELOW THE EXISTING GROUND SURFACE

NOTES

(1) BORINGS WERE DRILLED ON SEPTEMBER AND OCTOBER, 2017 USING A CENTRAL MINING EQUIPMENT MODEL 45 (CME 45) AUTOMATIC HAMMER DRILL RIG.

(2) STRATA BOUNDARIES ARE APPROXIMATE AND REPRESENT SOIL AND REPRESENT SOIL STRATA AT EACH TEST HOLE LOCATION ONLY. SOIL TRANSITIONS MAY BE MORE GRADUAL THAN IMPLIED.

(3) GROUNDWATER LEVELS SHOWN ON THE SUBSURFACE PROFILES REPRESENT GROUNDWATER SURFACES ON THE DATES SHOWN. GROUNDWATER LEVELS WILL FLUCTUATE THROUGHOUT THE YEAR.

(4) LONGITUDE AND LATITUDE COORDINATES WERE MEASURED IN THE FIELD USING A HAND HELD GPS UNIT.

(5) ELEVATIONS WERE NOT AVAILABLE

(6) AFTER COMPLETION OF DRILLING BOREHOLES WERE BACK FILLED WITH GROUT.

STANDARD PENETRATION TEST DATA

SPOON INSIDE DIA.	1.375 INCH
SPOON OUTSIDE DIA.	2.0 INCHES
AVG. HAMMER DROP	30 INCHES
HAMMER WEIGHT	140 POUNDS

GRANULAR MATERIALS

RELATIVE DENSITY	AUTOMATIC HAMMER SPT N-VALUE BLOWS/FOOT
VERY LOOSE	LESS THAN 3
LOOSE	3 - 8
MEDIUM	8 - 24
DENSE	24 - 40
VERY DENSE	GREATER THAN 40

REVISIONS

Date.	By	Descriptions	Date.	By	Descriptions

	Names	Dates
Drawn by	ML	10/13/17
Checked by	AB	10/13/17
Designed by		
Checked by		
Approved by		

RADISE — Infrastructure Engineers & Software Developers

LICENSE NO. - 8901

ENGINEER OF RECORD
RADISE International
4152 West Blue Heron Boulevard, Suite 1114
Riviera Beach, Florida. 33404
TEL 561-841-0103 FAX 561-841-0104
URL : http:// www.radise.net

CITY OF FORT LAUDERDALE
PUBLIC WORKS DEPARTMENT

COUNTY	CLIENT
BROWARD	HAZEN AND SAWYER

SCALE: VERTICAL N.T.S.
SCALE: HORIZONTAL N.T.S.

SHEET TITLE: SUBSURFACE PROFILES (SEAWALLS)

PROJECT NAME: STORMWATER MASTER PLAN MODELING AND DESIGN IMPLEMENTATION

SHEET NO. 9D

RADISE PROJECT NO: 170901

	S-16	S-17
BORING NO.	S-16	S-17
ELEVATION (NAVD 88):	N/A	N/A
LATITUDE:	26.1172°	26.1140°
LONGITUDE:	-80.1252°	-80.1270°
DATE:	09/29/2017	09/18/2017
DRILLER:	T. FICKLING	T. FICKLING
RIG:	CME 45	CME 45

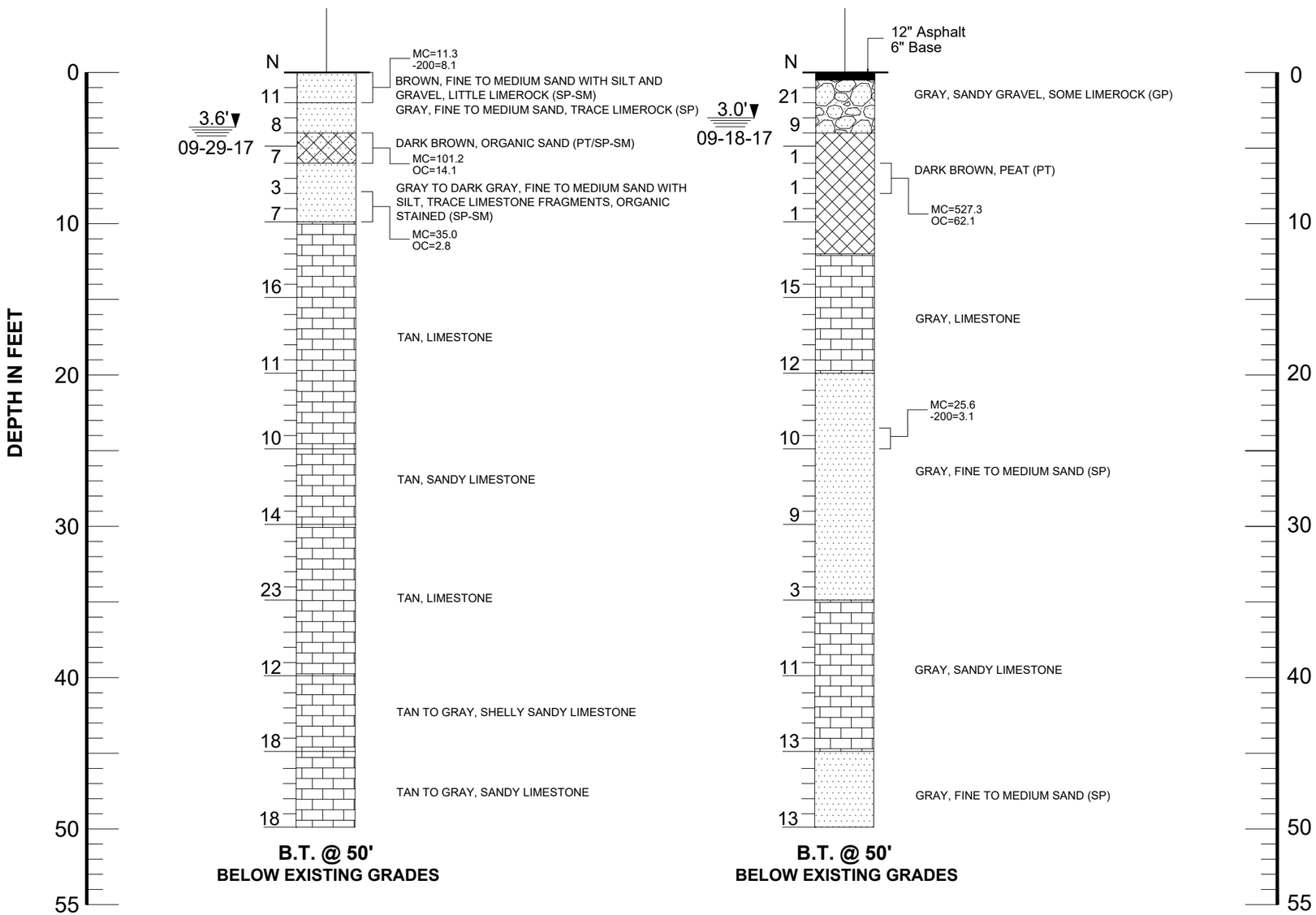

LEGEND

ASPHALT AND BASE	LIMESTONE
SAND	GRAVEL
SILT	ORGANIC MATERIAL

1.5' ▼ 09-21-17	GROUNDWATER DEPTH IN FEET AND DRILLING DATE
N	STANDARD PENETRATION RESISTANCE- BLOWS PER FOOT USING AUTOMATIC HAMMER
SP, SP-SM, GP, PT	UNIFIED SOIL CLASSIFICATION SYSTEM GROUP SYMBOL (ASTM D 2488)
S-1	STANDARD PENETRATION TEST (SPT) BORING AND NUMBER
MC	MOISTURE CONTENT (%)
-200	AMOUNT PASSING US STANDARD # 200 SIEVE
OC	ORGANIC CONTENTS (%)
LL	LIQUID LIMIT (%)
PI	PLASTICITY INDEX (%)
B.T. @ 50'	BORING TERMINATED AT 50 FEET BELOW THE EXISTING GROUND SURFACE

NOTES

(1) BORINGS WERE DRILLED ON SEPTEMBER AND OCTOBER, 2017 USING A CENTRAL MINING EQUIPMENT MODEL 45 (CME 45) AUTOMATIC HAMMER DRILL RIG.

(2) STRATA BOUNDARIES ARE APPROXIMATE AND REPRESENT SOIL AND REPRESENT SOIL STRATA AT EACH TEST HOLE LOCATION ONLY. SOIL TRANSITIONS MAY BE MORE GRADUAL THAN IMPLIED.

(3) GROUNDWATER LEVELS SHOWN ON THE SUBSURFACE PROFILES REPRESENT GROUNDWATER SURFACES ON THE DATES SHOWN. GROUNDWATER LEVELS WILL FLUCTUATE THROUGHOUT THE YEAR.

(4) LONGITUDE AND LATITUDE COORDINATES WERE MEASURED IN THE FIELD USING A HAND HELD GPS UNIT.

(5) ELEVATIONS WERE NOT AVAILABLE

(6) AFTER COMPLETION OF DRILLING BOREHOLES WERE BACK FILLED WITH GROUT.

STANDARD PENETRATION TEST DATA

SPOON INSIDE DIA.	1.375 INCH
SPOON OUTSIDE DIA.	2.0 INCHES
AVG. HAMMER DROP	30 INCHES
HAMMER WEIGHT	140 POUNDS

GRANULAR MATERIALS

RELATIVE DENSITY	AUTOMATIC HAMMER SPT N-VALUE BLOWS/FOOT
VERY LOOSE	LESS THAN 3
LOOSE	3 - 8
MEDIUM	8 - 24
DENSE	24 - 40
VERY DENSE	GREATER THAN 40

REVISIONS

Date.	By	Descriptions	Date.	By	Descriptions

	Names	Dates
Drawn by	ML	10/13/17
Checked by	AB	10/13/17
Designed by		
Checked by		
Approved by		

RADISE
Infrastructure Engineers & Software Developers
LICENSE NO. - 8901

ENGINEER OF RECORD
RADISE International
4152 West Blue Heron Boulevard, Suite 1114
Riviera Beach, Florida. 33404
TEL 561-841-0103 FAX 561-841-0104
URL : http:// www.radise.net

CITY OF FORT LAUDERDALE
PUBLIC WORKS DEPARTMENT

COUNTY	CLIENT
BROWARD	HAZEN AND SAWYER

SCALE: VERTICAL N.T.S.
SCALE: HORIZONTAL N.T.S.

SHEET TITLE: SUBSURFACE PROFILES (SEAWALLS)

PROJECT NAME: STORMWATER MASTER PLAN MODELING AND DESIGN IMPLEMENTATION

SHEET NO. 9E

RADISE PROJECT NO: 170901

	S-18	S-19
BORING NO.	S-18	S-19
ELEVATION (NAVD 88):	N/A	N/A
LATITUDE:	26.1129°	26.1123°
LONGITUDE:	-80.1272°	-80.1274°
DATE:	09/18/2017	09/16/2017
DRILLER:	T. FICKLING	T. FICKLING
RIG:	CME 45	CME 45

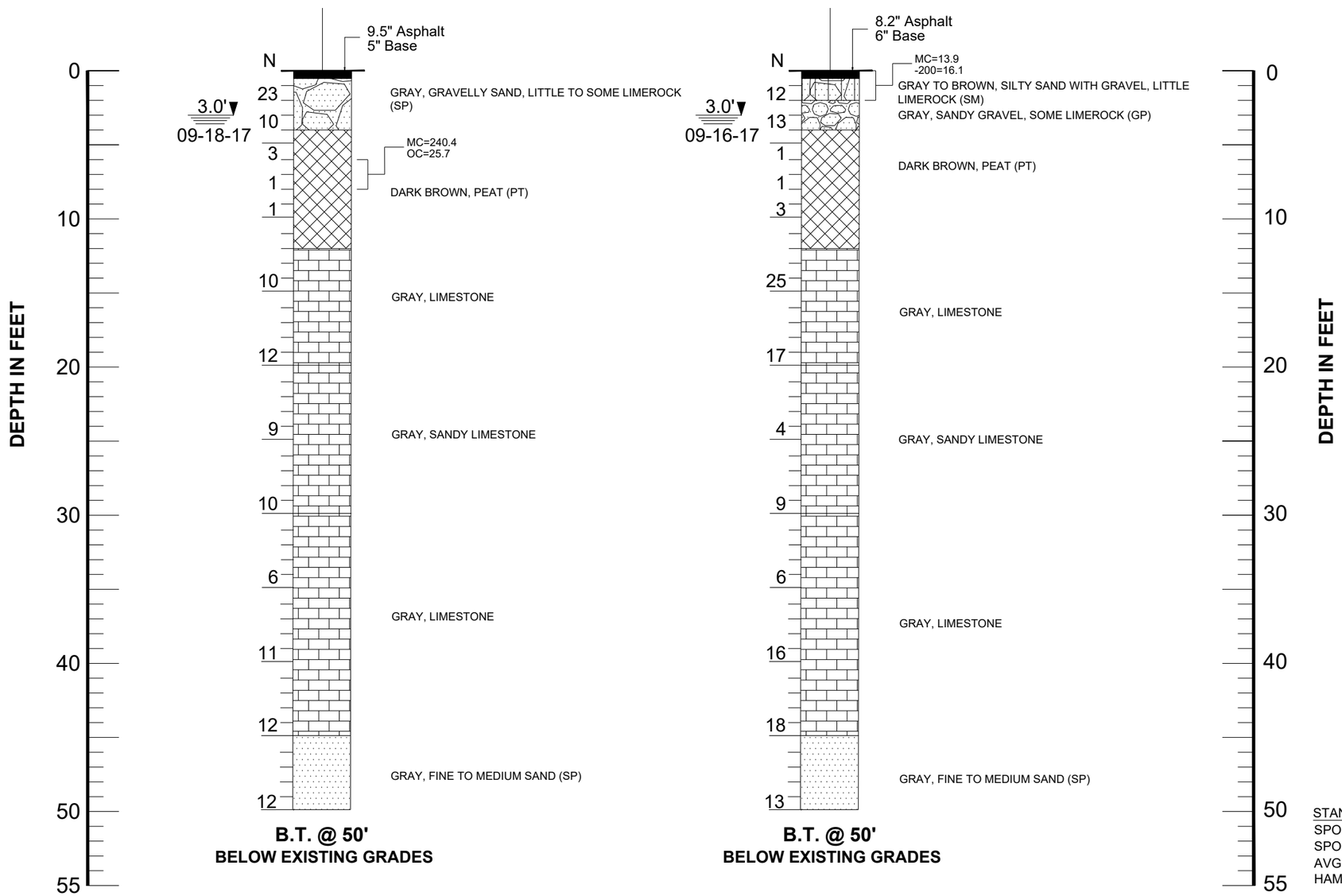

LEGEND

ASPHALT AND BASE	LIMESTONE
SAND	GRAVEL
SILT	ORGANIC MATERIAL

1.5' / 09-21-17	GROUNDWATER DEPTH IN FEET AND DRILLING DATE
N	STANDARD PENETRATION RESISTANCE- BLOWS PER FOOT USING AUTOMATIC HAMMER
SP, SP-SM, GP, PT	UNIFIED SOIL CLASSIFICATION SYSTEM GROUP SYMBOL (ASTM D 2488)
S-1	STANDARD PENETRATION TEST (SPT) BORING AND NUMBER
MC	MOISTURE CONTENT (%)
-200	AMOUNT PASSING US STANDARD # 200 SIEVE
OC	ORGANIC CONTENTS (%)
LL	LIQUID LIMIT (%)
PI	PLASTICITY INDEX (%)
B.T. @ 50'	BORING TERMINATED AT 50 FEET BELOW THE EXISTING GROUND SURFACE

NOTES

(1) BORINGS WERE DRILLED ON SEPTEMBER AND OCTOBER, 2017 USING A CENTRAL MINING EQUIPMENT MODEL 45 (CME 45) AUTOMATIC HAMMER DRILL RIG.

(2) STRATA BOUNDARIES ARE APPROXIMATE AND REPRESENT SOIL AND REPRESENT SOIL STRATA AT EACH TEST HOLE LOCATION ONLY. SOIL TRANSITIONS MAY BE MORE GRADUAL THAN IMPLIED.

(3) GROUNDWATER LEVELS SHOWN ON THE SUBSURFACE PROFILES REPRESENT GROUNDWATER SURFACES ON THE DATES SHOWN. GROUNDWATER LEVELS WILL FLUCTUATE THROUGHOUT THE YEAR.

(4) LONGITUDE AND LATITUDE COORDINATES WERE MEASURED IN THE FIELD USING A HAND HELD GPS UNIT.

(5) ELEVATIONS WERE NOT AVAILABLE

(6) AFTER COMPLETION OF DRILLING BOREHOLES WERE BACK FILLED WITH GROUT.

STANDARD PENETRATION TEST DATA

SPOON INSIDE DIA.	1.375 INCH
SPOON OUTSIDE DIA.	2.0 INCHES
AVG. HAMMER DROP	30 INCHES
HAMMER WEIGHT	140 POUNDS

GRANULAR MATERIALS

RELATIVE DENSITY	AUTOMATIC HAMMER SPT N-VALUE BLOWS/FOOT
VERY LOOSE	LESS THAN 3
LOOSE	3 - 8
MEDIUM	8 - 24
DENSE	24 - 40
VERY DENSE	GREATER THAN 40

REVISIONS

Date.	By	Descriptions	Date.	By	Descriptions

	Names	Dates
Drawn by	ML	10/13/17
Checked by	AB	10/13/17
Designed by		
Checked by		
Approved by		

RADISE
Infrastructure Engineers & Software Developers
LICENSE NO. - 8901

ENGINEER OF RECORD
RADISE International
4152 West Blue Heron Boulevard, Suite 1114
Riviera Beach, Florida. 33404
TEL 561-841-0103 FAX 561-841-0104
URL : http:// www.radise.net

CITY OF FORT LAUDERDALE
PUBLIC WORKS DEPARTMENT

COUNTY	CLIENT
BROWARD	HAZEN AND SAWYER

SCALE: VERTICAL N.T.S.
SCALE: HORIZONTAL N.T.S.

SHEET TITLE: SUBSURFACE PROFILES (SEAWALLS)

PROJECT NAME: STORMWATER MASTER PLAN MODELING AND DESIGN IMPLEMENTATION

SHEET NO. 9F

RADISE PROJECT NO: 170901

	S-20	S-21
BORING NO.	S-20	S-21
ELEVATION (NAVD 88):	N/A	N/A
LATITUDE:	26.1117°	26.1110°
LONGITUDE:	-80.1275°	-80.1280°
DATE:	09/16/2017	09/15/2017
DRILLER:	T. FICKLING	T. FICKLING
RIG:	CME 45	CME 45

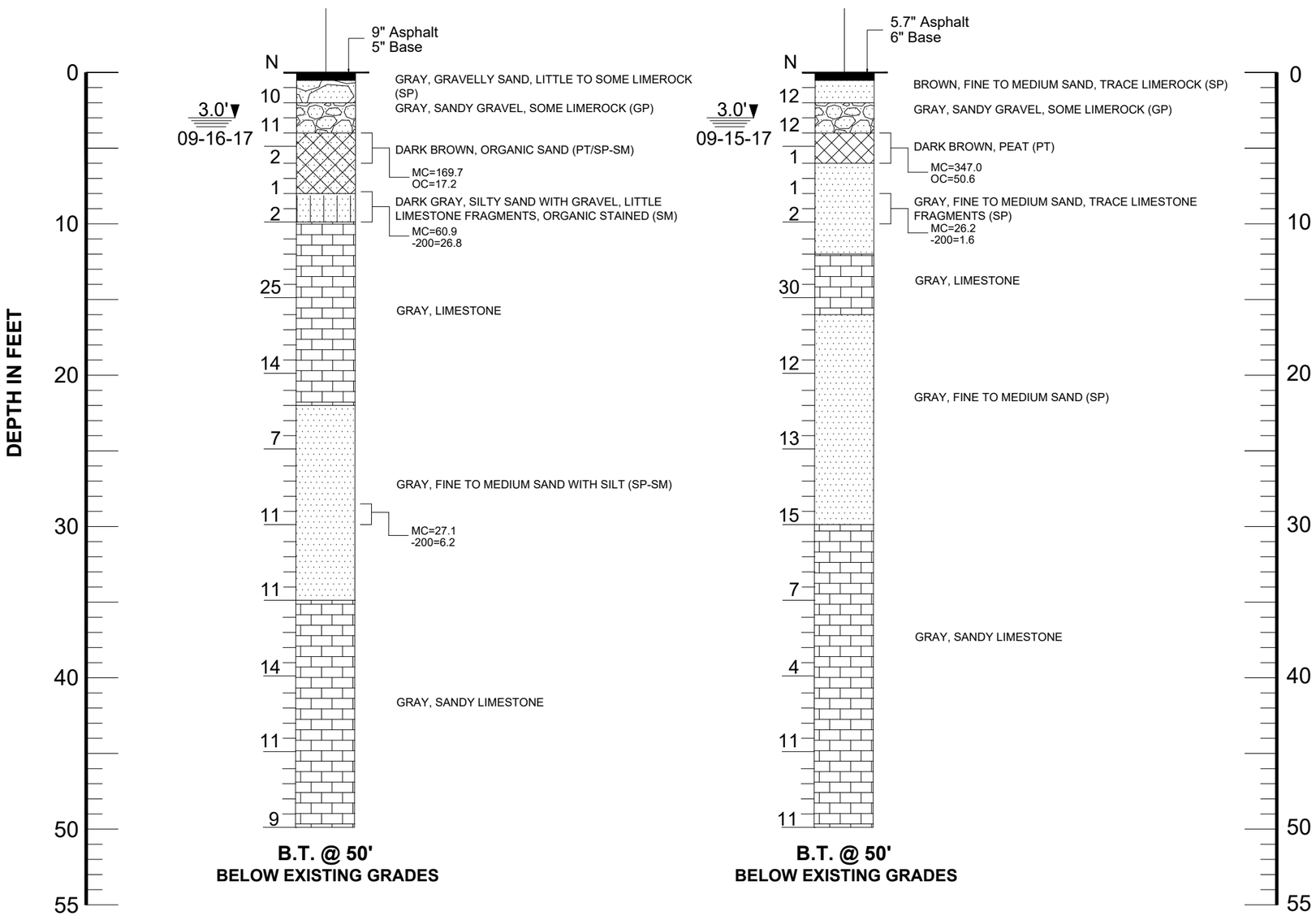

LEGEND

- ASPHALT AND BASE
- SAND
- SILT
- LIMESTONE
- GRAVEL
- ORGANIC MATERIAL

1.5' ▼ 09-21-17	GROUNDWATER DEPTH IN FEET AND DRILLING DATE
N	STANDARD PENETRATION RESISTANCE- BLOWS PER FOOT USING AUTOMATIC HAMMER
SP, SP-SM, GP, PT	UNIFIED SOIL CLASSIFICATION SYSTEM GROUP SYMBOL (ASTM D 2488)
S-1	STANDARD PENETRATION TEST (SPT) BORING AND NUMBER
MC	MOISTURE CONTENT (%)
-200	AMOUNT PASSING US STANDARD # 200 SIEVE
OC	ORGANIC CONTENTS (%)
LL	LIQUID LIMIT (%)
PI	PLASTICITY INDEX (%)
B.T. @ 50'	BORING TERMINATED AT 50 FEET BELOW THE EXISTING GROUND SURFACE

NOTES

(1) BORINGS WERE DRILLED ON SEPTEMBER AND OCTOBER, 2017 USING A CENTRAL MINING EQUIPMENT MODEL 45 (CME 45) AUTOMATIC HAMMER DRILL RIG.

(2) STRATA BOUNDARIES ARE APPROXIMATE AND REPRESENT SOIL AND REPRESENT SOIL STRATA AT EACH TEST HOLE LOCATION ONLY. SOIL TRANSITIONS MAY BE MORE GRADUAL THAN IMPLIED.

(3) GROUNDWATER LEVELS SHOWN ON THE SUBSURFACE PROFILES REPRESENT GROUNDWATER SURFACES ON THE DATES SHOWN. GROUNDWATER LEVELS WILL FLUCTUATE THROUGHOUT THE YEAR.

(4) LONGITUDE AND LATITUDE COORDINATES WERE MEASURED IN THE FIELD USING A HAND HELD GPS UNIT.

(5) ELEVATIONS WERE NOT AVAILABLE

(6) AFTER COMPLETION OF DRILLING BOREHOLES WERE BACK FILLED WITH GROUT.

STANDARD PENETRATION TEST DATA

SPOON INSIDE DIA.	1.375 INCH
SPOON OUTSIDE DIA.	2.0 INCHES
AVG. HAMMER DROP	30 INCHES
HAMMER WEIGHT	140 POUNDS

GRANULAR MATERIALS

RELATIVE DENSITY	AUTOMATIC HAMMER SPT N-VALUE BLOWS/FOOT
VERY LOOSE	LESS THAN 3
LOOSE	3 - 8
MEDIUM	8 - 24
DENSE	24 - 40
VERY DENSE	GREATER THAN 40

REVISIONS

Date.	By	Descriptions	Date.	By	Descriptions

	Names	Dates
Drawn by	ML	10/13/17
Checked by	AB	10/13/17
Designed by		
Checked by		
Approved by		

RADISE
Infrastructure Engineers & Software Developers
LICENSE NO. - 8901

ENGINEER OF RECORD
RADISE International
4152 West Blue Heron Boulevard, Suite 1114
Riviera Beach, Florida. 33404
TEL 561-841-0103 FAX 561-841-0104
URL : http:// www.radise.net

CITY OF FORT LAUDERDALE
PUBLIC WORKS DEPARTMENT

COUNTY	CLIENT
BROWARD	HAZEN AND SAWYER

SCALE: VERTICAL N.T.S.
SCALE: HORIZONTAL N.T.S.

SHEET TITLE: SUBSURFACE PROFILES (SEAWALLS)

PROJECT NAME: STORMWATER MASTER PLAN MODELING AND DESIGN IMPLEMENTATION

SHEET NO. 9G

RADISE PROJECT NO: 170901

	S-22	S-23
BORING NO.	S-22	S-23
ELEVATION (NAVD 88):	N/A	N/A
LATITUDE:	26.1097°	26.1086°
LONGITUDE:	-80.1282°	-80.1282°
DATE:	09/16/2017	09/14/2017
DRILLER:	T. FICKLING	T. FICKLING
RIG:	CME 45	CME 45

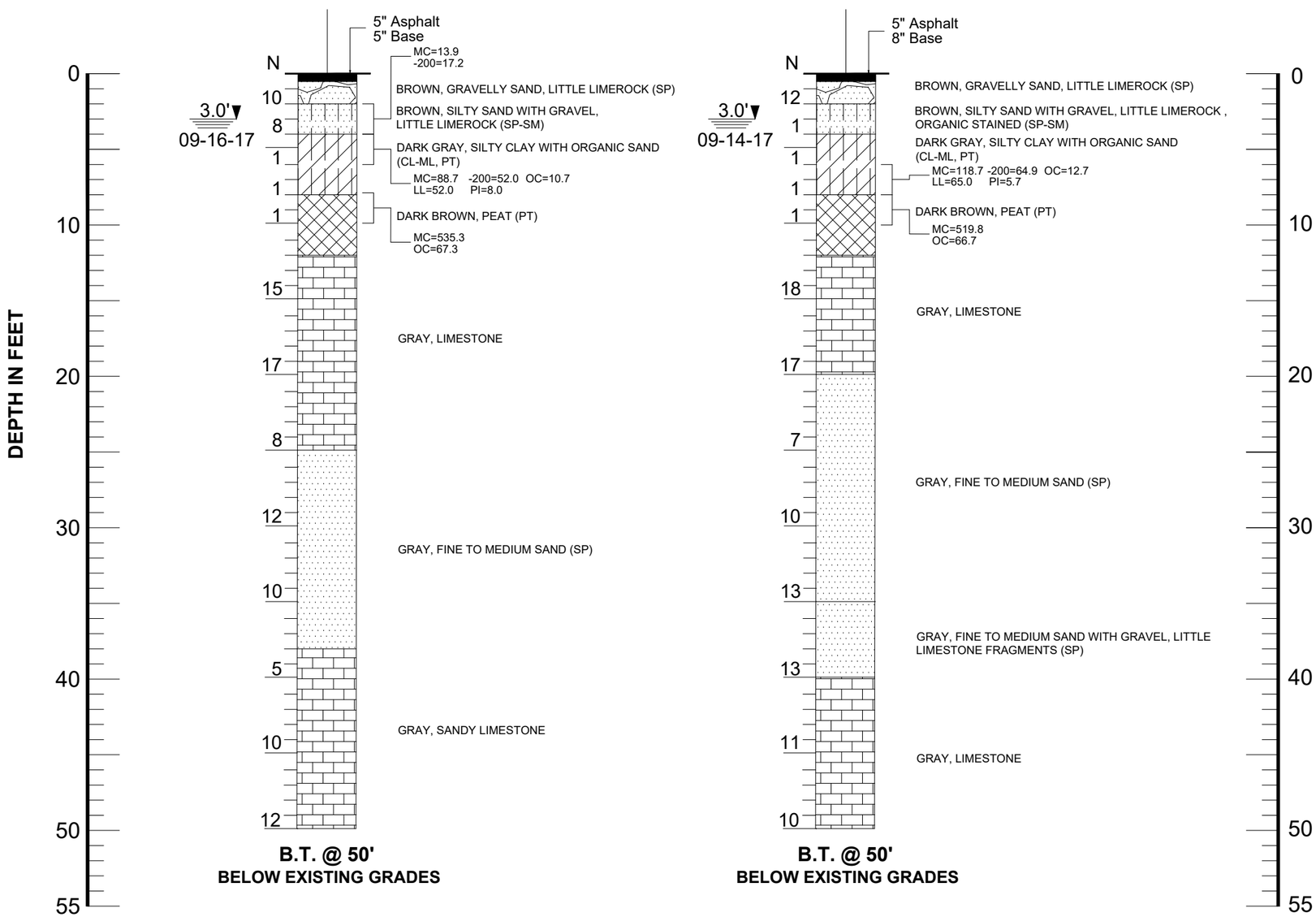

LEGEND

- ASPHALT AND BASE
- SAND
- SILT
- LIMESTONE
- GRAVEL
- ORGANIC MATERIAL

1.5' / 09-21-17	GROUNDWATER DEPTH IN FEET AND DRILLING DATE
N	STANDARD PENETRATION RESISTANCE- BLOWS PER FOOT USING AUTOMATIC HAMMER
SP, SP-SM, GP, PT	UNIFIED SOIL CLASSIFICATION SYSTEM GROUP SYMBOL (ASTM D 2488)
S-1	STANDARD PENETRATION TEST (SPT) BORING AND NUMBER
MC	MOISTURE CONTENT (%)
-200	AMOUNT PASSING US STANDARD # 200 SIEVE
OC	ORGANIC CONTENTS (%)
LL	LIQUID LIMIT (%)
PI	PLASTICITY INDEX (%)
B.T. @ 50'	BORING TERMINATED AT 50 FEET BELOW THE EXISTING GROUND SURFACE

NOTES

(1) BORINGS WERE DRILLED ON SEPTEMBER AND OCTOBER, 2017 USING A CENTRAL MINING EQUIPMENT MODEL 45 (CME 45) AUTOMATIC HAMMER DRILL RIG.

(2) STRATA BOUNDARIES ARE APPROXIMATE AND REPRESENT SOIL AND REPRESENT SOIL STRATA AT EACH TEST HOLE LOCATION ONLY. SOIL TRANSITIONS MAY BE MORE GRADUAL THAN IMPLIED.

(3) GROUNDWATER LEVELS SHOWN ON THE SUBSURFACE PROFILES REPRESENT GROUNDWATER SURFACES ON THE DATES SHOWN. GROUNDWATER LEVELS WILL FLUCTUATE THROUGHOUT THE YEAR.

(4) LONGITUDE AND LATITUDE COORDINATES WERE MEASURED IN THE FIELD USING A HAND HELD GPS UNIT.

(5) ELEVATIONS WERE NOT AVAILABLE

(6) AFTER COMPLETION OF DRILLING BOREHOLES WERE BACK FILLED WITH GROUT.

STANDARD PENETRATION TEST DATA

SPOON INSIDE DIA.	1.375 INCH
SPOON OUTSIDE DIA.	2.0 INCHES
AVG. HAMMER DROP	30 INCHES
HAMMER WEIGHT	140 POUNDS

GRANULAR MATERIALS

RELATIVE DENSITY	AUTOMATIC HAMMER SPT N-VALUE BLOWS/FOOT
VERY LOOSE	LESS THAN 3
LOOSE	3 - 8
MEDIUM	8 - 24
DENSE	24 - 40
VERY DENSE	GREATER THAN 40

REVISIONS

Date.	By	Descriptions	Date.	By	Descriptions

	Names	Dates
Drawn by	ML	10/13/17
Checked by	AB	10/13/17
Designed by		
Checked by		
Approved by		

RADISE
Infrastructure Engineers & Software Developers
LICENSE NO. - 8901

ENGINEER OF RECORD
RADISE International
4152 West Blue Heron Boulevard, Suite 1114
Riviera Beach, Florida. 33404
TEL 561-841-0103 FAX 561-841-0104
URL : http:// www.radise.net

CITY OF FORT LAUDERDALE
PUBLIC WORKS DEPARTMENT

COUNTY	CLIENT
BROWARD	HAZEN AND SAWYER

SCALE: VERTICAL N.T.S.
SCALE: HORIZONTAL N.T.S.

SHEET TITLE: SUBSURFACE PROFILES (SEAWALLS)

PROJECT NAME: STORMWATER MASTER PLAN MODELING AND DESIGN IMPLEMENTATION

SHEET NO. 9H

RADISE PROJECT NO: 170901

	S-24	S-25
BORING NO.	S-24	S-25
ELEVATION (NAVD 88):	N/A	N/A
LATITUDE:	26.1123°	26.1123°
LONGITUDE:	-80.1243°	-80.1235°
DATE:	09/22/2017	09/22/2017
DRILLER:	T. FICKLING	T. FICKLING
RIG:	CME 45	CME 45

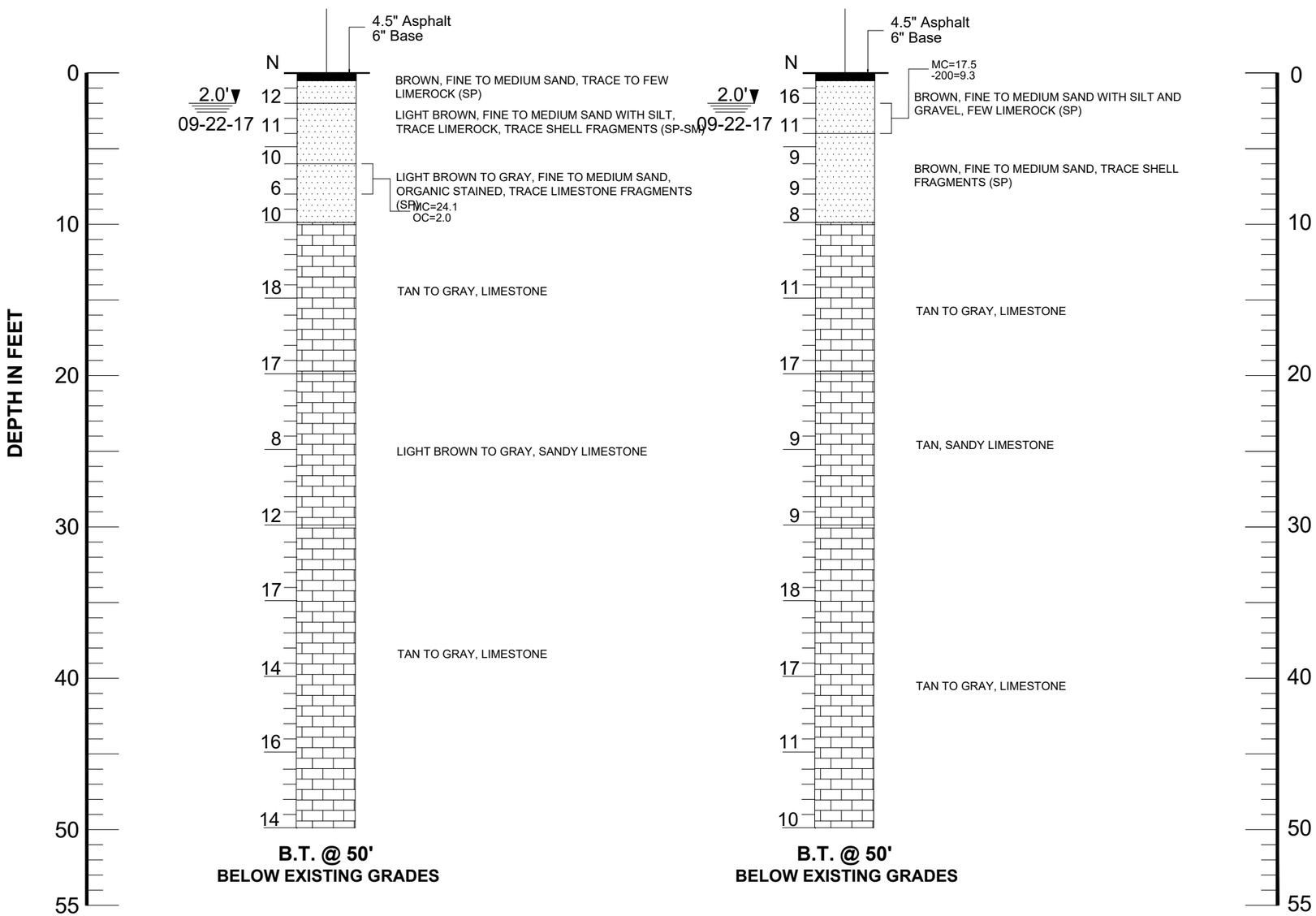

LEGEND

ASPHALT AND BASE	LIMESTONE
SAND	GRAVEL
SILT	ORGANIC MATERIAL

1.5' / 09-21-17	GROUNDWATER DEPTH IN FEET AND DRILLING DATE
N	STANDARD PENETRATION RESISTANCE- BLOWS PER FOOT USING AUTOMATIC HAMMER
SP, SP-SM, GP, PT	UNIFIED SOIL CLASSIFICATION SYSTEM GROUP SYMBOL (ASTM D 2488)
S-1	STANDARD PENETRATION TEST (SPT) BORING AND NUMBER
MC	MOISTURE CONTENT (%)
-200	AMOUNT PASSING US STANDARD # 200 SIEVE
OC	ORGANIC CONTENTS (%)
LL	LIQUID LIMIT (%)
PI	PLASTICITY INDEX (%)
B.T. @ 50'	BORING TERMINATED AT 50 FEET BELOW THE EXISTING GROUND SURFACE

NOTES

(1) BORINGS WERE DRILLED ON SEPTEMBER AND OCTOBER, 2017 USING A CENTRAL MINING EQUIPMENT MODEL 45 (CME 45) AUTOMATIC HAMMER DRILL RIG.

(2) STRATA BOUNDARIES ARE APPROXIMATE AND REPRESENT SOIL AND REPRESENT SOIL STRATA AT EACH TEST HOLE LOCATION ONLY. SOIL TRANSITIONS MAY BE MORE GRADUAL THAN IMPLIED.

(3) GROUNDWATER LEVELS SHOWN ON THE SUBSURFACE PROFILES REPRESENT GROUNDWATER SURFACES ON THE DATES SHOWN. GROUNDWATER LEVELS WILL FLUCTUATE THROUGHOUT THE YEAR.

(4) LONGITUDE AND LATITUDE COORDINATES WERE MEASURED IN THE FIELD USING A HAND HELD GPS UNIT.

(5) ELEVATIONS WERE NOT AVAILABLE

(6) AFTER COMPLETION OF DRILLING BOREHOLES WERE BACK FILLED WITH GROUT.

STANDARD PENETRATION TEST DATA

SPOON INSIDE DIA.	1.375 INCH
SPOON OUTSIDE DIA.	2.0 INCHES
AVG. HAMMER DROP	30 INCHES
HAMMER WEIGHT	140 POUNDS

GRANULAR MATERIALS

RELATIVE DENSITY	AUTOMATIC HAMMER SPT N-VALUE BLOWS/FOOT
VERY LOOSE	LESS THAN 3
LOOSE	3 - 8
MEDIUM	8 - 24
DENSE	24 - 40
VERY DENSE	GREATER THAN 40

REVISIONS

Date.	By	Descriptions	Date.	By	Descriptions

	Names	Dates
Drawn by	ML	10/13/17
Checked by	AB	10/13/17
Designed by		
Checked by		
Approved by		

RADISE
Infrastructure Engineers & Software Developers
LICENSE NO. - 8901

ENGINEER OF RECORD
RADISE International
4152 West Blue Heron Boulevard, Suite 1114
Riviera Beach, Florida. 33404
TEL 561-841-0103 FAX 561-841-0104
URL : http:// www.radise.net

CITY OF FORT LAUDERDALE
PUBLIC WORKS DEPARTMENT

COUNTY	CLIENT
BROWARD	HAZEN AND SAWYER

SCALE: VERTICAL N.T.S.
SCALE: HORIZONTAL N.T.S.

SHEET TITLE: SUBSURFACE PROFILES (SEAWALLS)

PROJECT NAME: STORMWATER MASTER PLAN MODELING AND DESIGN IMPLEMENTATION

SHEET NO. 9I

RADISE PROJECT NO: 170901

	S-26	S-27
BORING NO.	S-26	S-27
ELEVATION (NAVD 88):	N/A	N/A
LATITUDE:	26.1103°	26.1103°
LONGITUDE:	-80.1221°	-80.1214°
DATE:	09/25/2017	09/25/2017
DRILLER:	T. FICKLING	T. FICKLING
RIG:	CME 45	CME 45

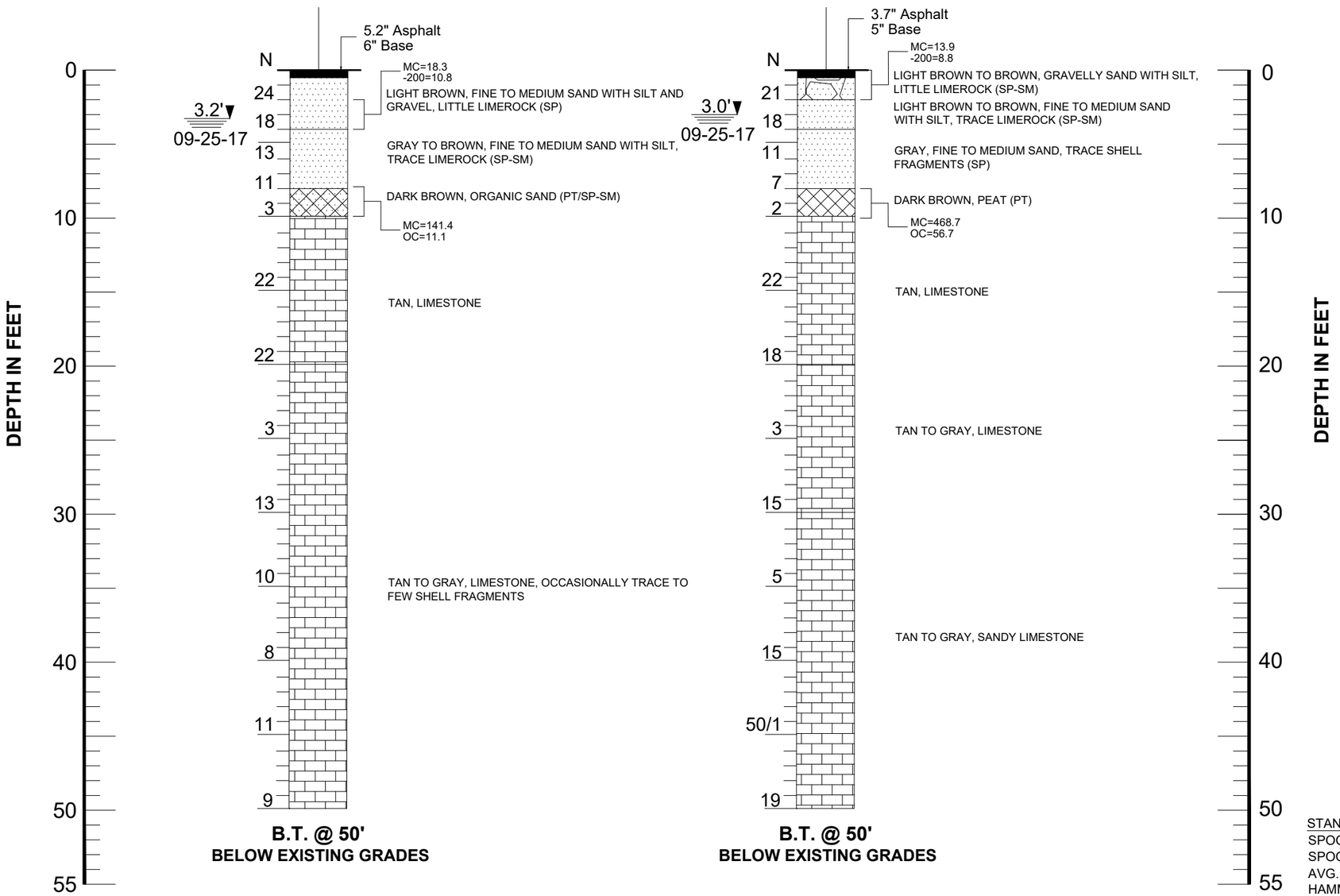

LEGEND

- ASPHALT AND BASE
- SAND
- SILT
- LIMESTONE
- GRAVEL
- ORGANIC MATERIAL

1.5' ▼ 09-21-17	GROUNDWATER DEPTH IN FEET AND DRILLING DATE
N	STANDARD PENETRATION RESISTANCE- BLOWS PER FOOT USING AUTOMATIC HAMMER
SP, SP-SM, GP, PT	UNIFIED SOIL CLASSIFICATION SYSTEM GROUP SYMBOL (ASTM D 2488)
S-1	STANDARD PENETRATION TEST (SPT) BORING AND NUMBER
MC	MOISTURE CONTENT (%)
-200	AMOUNT PASSING US STANDARD # 200 SIEVE
OC	ORGANIC CONTENTS (%)
LL	LIQUID LIMIT (%)
PI	PLASTICITY INDEX (%)
B.T. @ 50'	BORING TERMINATED AT 50 FEET BELOW THE EXISTING GROUND SURFACE

NOTES

(1) BORINGS WERE DRILLED ON SEPTEMBER AND OCTOBER, 2017 USING A CENTRAL MINING EQUIPMENT MODEL 45 (CME 45) AUTOMATIC HAMMER DRILL RIG.

(2) STRATA BOUNDARIES ARE APPROXIMATE AND REPRESENT SOIL AND REPRESENT SOIL STRATA AT EACH TEST HOLE LOCATION ONLY. SOIL TRANSITIONS MAY BE MORE GRADUAL THAN IMPLIED.

(3) GROUNDWATER LEVELS SHOWN ON THE SUBSURFACE PROFILES REPRESENT GROUNDWATER SURFACES ON THE DATES SHOWN. GROUNDWATER LEVELS WILL FLUCTUATE THROUGHOUT THE YEAR.

(4) LONGITUDE AND LATITUDE COORDINATES WERE MEASURED IN THE FIELD USING A HAND HELD GPS UNIT.

(5) ELEVATIONS WERE NOT AVAILABLE

(6) AFTER COMPLETION OF DRILLING BOREHOLES WERE BACK FILLED WITH GROUT.

STANDARD PENETRATION TEST DATA

SPOON INSIDE DIA.	1.375 INCH
SPOON OUTSIDE DIA.	2.0 INCHES
AVG. HAMMER DROP	30 INCHES
HAMMER WEIGHT	140 POUNDS

GRANULAR MATERIALS

RELATIVE DENSITY	AUTOMATIC HAMMER SPT N-VALUE BLOWS/FOOT
VERY LOOSE	LESS THAN 3
LOOSE	3 - 8
MEDIUM	8 - 24
DENSE	24 - 40
VERY DENSE	GREATER THAN 40

REVISIONS

Date.	By	Descriptions	Date.	By	Descriptions

	Names	Dates
Drawn by	ML	10/13/17
Checked by	AB	10/13/17
Designed by		
Checked by		
Approved by		

RADISE
Infrastructure Engineers & Software Developers
LICENSE NO. - 8901

ENGINEER OF RECORD
RADISE International
4152 West Blue Heron Boulevard, Suite 1114
Riviera Beach, Florida. 33404
TEL 561-841-0103 FAX 561-841-0104
URL : http:// www.radise.net

CITY OF FORT LAUDERDALE
PUBLIC WORKS DEPARTMENT

COUNTY	CLIENT
BROWARD	HAZEN AND SAWYER

SCALE: VERTICAL N.T.S.
SCALE: HORIZONTAL N.T.S.

SHEET TITLE: SUBSURFACE PROFILES (SEAWALLS)

PROJECT NAME: STORMWATER MASTER PLAN MODELING AND DESIGN IMPLEMENTATION

SHEET NO. 9J

RADISE PROJECT NO: 170901

	S-28	S-29
BORING NO.	S-28	S-29
ELEVATION (NAVD 88):	N/A	N/A
LATITUDE:	26.1228°	26.1213°
LONGITUDE:	-80.1242°	-80.1155°
DATE:	09/25/2017	09/26/2017
DRILLER:	T. FICKLING	T. FICKLING
RIG:	CME 45	CME 45

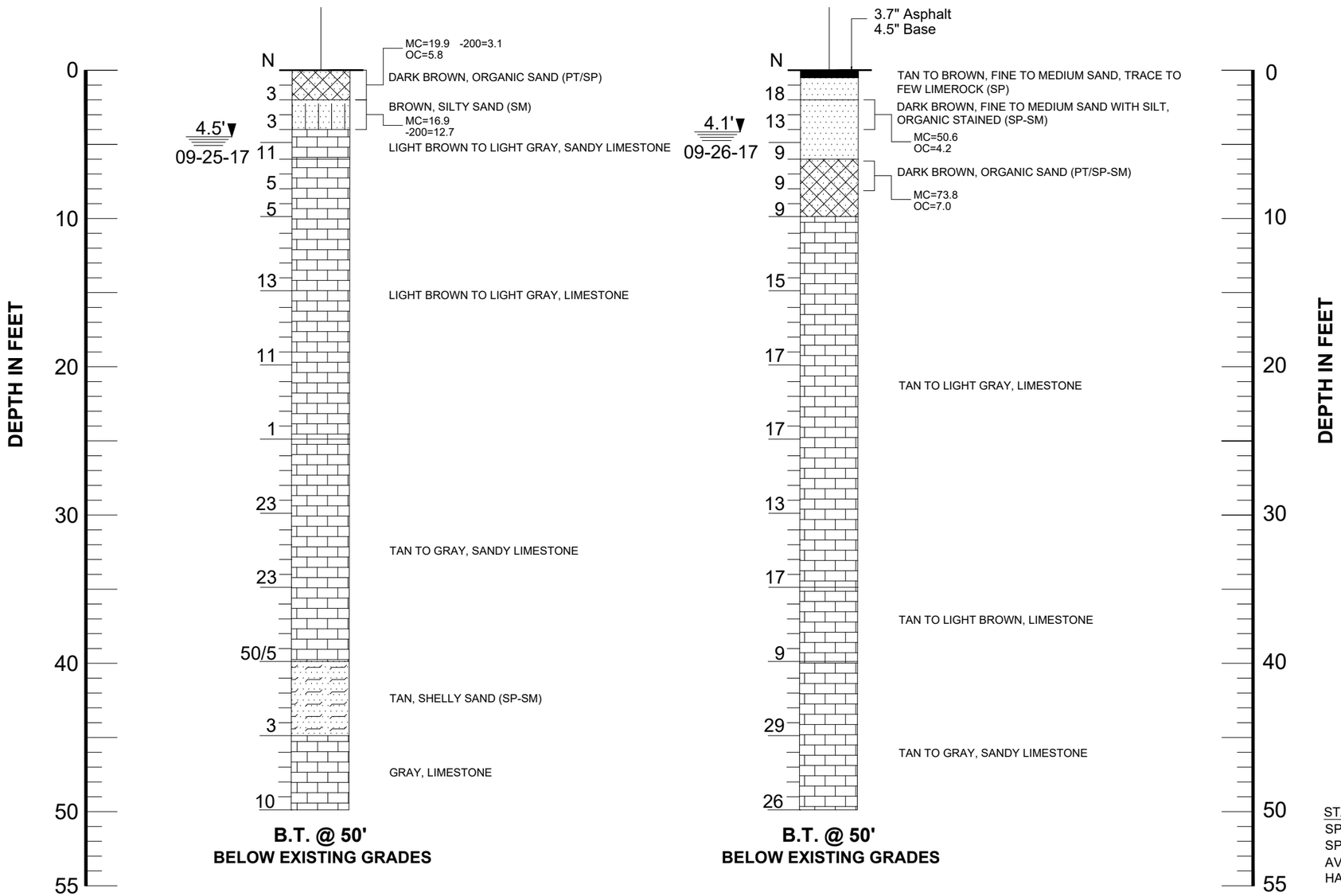

LEGEND

- ASPHALT AND BASE
- SAND
- SILT
- LIMESTONE
- GRAVEL
- ORGANIC MATERIAL

1.5' ▼ 09-21-17	GROUNDWATER DEPTH IN FEET AND DRILLING DATE
N	STANDARD PENETRATION RESISTANCE- BLOWS PER FOOT USING AUTOMATIC HAMMER
SP, SP-SM, GP, PT	UNIFIED SOIL CLASSIFICATION SYSTEM GROUP SYMBOL (ASTM D 2488)
S-1	STANDARD PENETRATION TEST (SPT) BORING AND NUMBER
MC	MOISTURE CONTENT (%)
-200	AMOUNT PASSING US STANDARD # 200 SIEVE
OC	ORGANIC CONTENTS (%)
LL	LIQUID LIMIT (%)
PI	PLASTICITY INDEX (%)
B.T. @ 50'	BORING TERMINATED AT 50 FEET BELOW THE EXISTING GROUND SURFACE

NOTES

(1) BORINGS WERE DRILLED ON SEPTEMBER AND OCTOBER, 2017 USING A CENTRAL MINING EQUIPMENT MODEL 45 (CME 45) AUTOMATIC HAMMER DRILL RIG.

(2) STRATA BOUNDARIES ARE APPROXIMATE AND REPRESENT SOIL AND REPRESENT SOIL STRATA AT EACH TEST HOLE LOCATION ONLY. SOIL TRANSITIONS MAY BE MORE GRADUAL THAN IMPLIED.

(3) GROUNDWATER LEVELS SHOWN ON THE SUBSURFACE PROFILES REPRESENT GROUNDWATER SURFACES ON THE DATES SHOWN. GROUNDWATER LEVELS WILL FLUCTUATE THROUGHOUT THE YEAR.

(4) LONGITUDE AND LATITUDE COORDINATES WERE MEASURED IN THE FIELD USING A HAND HELD GPS UNIT.

(5) ELEVATIONS WERE NOT AVAILABLE

(6) AFTER COMPLETION OF DRILLING BOREHOLES WERE BACK FILLED WITH GROUT.

STANDARD PENETRATION TEST DATA

SPOON INSIDE DIA.	1.375 INCH
SPOON OUTSIDE DIA.	2.0 INCHES
AVG. HAMMER DROP	30 INCHES
HAMMER WEIGHT	140 POUNDS

GRANULAR MATERIALS

RELATIVE DENSITY	AUTOMATIC HAMMER SPT N-VALUE BLOWS/FOOT
VERY LOOSE	LESS THAN 3
LOOSE	3 - 8
MEDIUM	8 - 24
DENSE	24 - 40
VERY DENSE	GREATER THAN 40

REVISIONS

Date.	By	Descriptions	Date.	By	Descriptions

	Names	Dates
Drawn by	ML	10/13/17
Checked by	AB	10/13/17
Designed by		
Checked by		
Approved by		

RADISE
Infrastructure Engineers & Software Developers
LICENSE NO. - 8901

ENGINEER OF RECORD
RADISE International
4152 West Blue Heron Boulevard, Suite 1114
Riviera Beach, Florida. 33404
TEL 561-841-0103 FAX 561-841-0104
URL : http:// www.radise.net

CITY OF FORT LAUDERDALE
PUBLIC WORKS DEPARTMENT

COUNTY	CLIENT
BROWARD	HAZEN AND SAWYER

SCALE: VERTICAL N.T.S.
SCALE: HORIZONTAL N.T.S.

SHEET TITLE: SUBSURFACE PROFILES (SEAWALLS)

PROJECT NAME: STORMWATER MASTER PLAN MODELING AND DESIGN IMPLEMENTATION

SHEET NO. 9K

RADISE PROJECT NO: 170901

BORING NO.	**S-30**
ELEVATION (NAVD 88):	**N/A**
LATITUDE:	**26.1259°**
LONGITUDE:	**-80.1097°**
DATE:	**09/27/2017**
DRILLER:	**T. FICKLING**
RIG:	**CME 45**

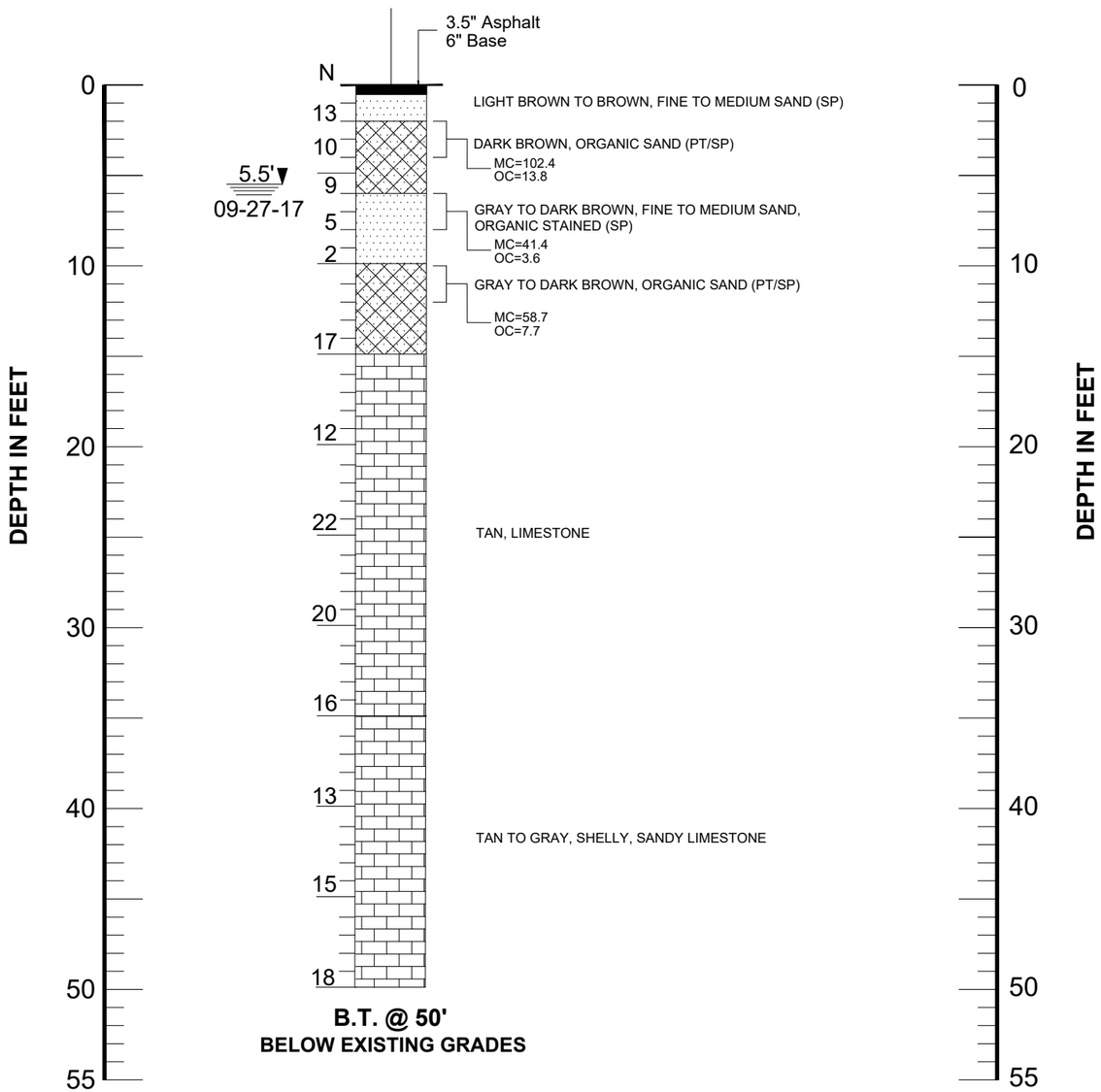

LEGEND

ASPHALT AND BASE	LIMESTONE
SAND	GRAVEL
SILT	ORGANIC MATERIAL

1.5' ▼ 09-21-17	GROUNDWATER DEPTH IN FEET AND DRILLING DATE
N	STANDARD PENETRATION RESISTANCE- BLOWS PER FOOT USING AUTOMATIC HAMMER
SP, SP-SM, GP, PT	UNIFIED SOIL CLASSIFICATION SYSTEM GROUP SYMBOL (ASTM D 2488)
S-1	STANDARD PENETRATION TEST (SPT) BORING AND NUMBER
MC	MOISTURE CONTENT (%)
-200	AMOUNT PASSING US STANDARD # 200 SIEVE
OC	ORGANIC CONTENTS (%)
LL	LIQUID LIMIT (%)
PI	PLASTICITY INDEX (%)
B.T. @ 50'	BORING TERMINATED AT 50 FEET BELOW THE EXISTING GROUND SURFACE

NOTES

(1) BORINGS WERE DRILLED ON SEPTEMBER AND OCTOBER, 2017 USING A CENTRAL MINING EQUIPMENT MODEL 45 (CME 45) AUTOMATIC HAMMER DRILL RIG.

(2) STRATA BOUNDARIES ARE APPROXIMATE AND REPRESENT SOIL AND REPRESENT SOIL STRATA AT EACH TEST HOLE LOCATION ONLY. SOIL TRANSITIONS MAY BE MORE GRADUAL THAN IMPLIED.

(3) GROUNDWATER LEVELS SHOWN ON THE SUBSURFACE PROFILES REPRESENT GROUNDWATER SURFACES ON THE DATES SHOWN. GROUNDWATER LEVELS WILL FLUCTUATE THROUGHOUT THE YEAR.

(4) LONGITUDE AND LATITUDE COORDINATES WERE MEASURED IN THE FIELD USING A HAND HELD GPS UNIT.

(5) ELEVATIONS WERE NOT AVAILABLE

(6) AFTER COMPLETION OF DRILLING BOREHOLES WERE BACK FILLED WITH GROUT.

STANDARD PENETRATION TEST DATA

SPOON INSIDE DIA.	1.375 INCH
SPOON OUTSIDE DIA.	2.0 INCHES
AVG. HAMMER DROP	30 INCHES
HAMMER WEIGHT	140 POUNDS

GRANULAR MATERIALS

RELATIVE DENSITY	AUTOMATIC HAMMER SPT N-VALUE BLOWS/FOOT
VERY LOOSE	LESS THAN 3
LOOSE	3 - 8
MEDIUM	8 - 24
DENSE	24 - 40
VERY DENSE	GREATER THAN 40

REVISIONS

Date.	By	Descriptions	Date.	By	Descriptions

	Names	Dates
Drawn by	ML	10/13/17
Checked by	AB	10/13/17
Designed by		
Checked by		
Approved by		

RADISE
Infrastructure Engineers & Software Developers
LICENSE NO. - 8901

ENGINEER OF RECORD
RADISE International
4152 West Blue Heron Boulevard, Suite 1114
Riviera Beach, Florida. 33404
TEL 561-841-0103 FAX 561-841-0104
URL : http:// www.radise.net

CITY OF FORT LAUDERDALE
PUBLIC WORKS DEPARTMENT

COUNTY	CLIENT
BROWARD	HAZEN AND SAWYER

SCALE: VERTICAL N.T.S.
SCALE: HORIZONTAL N.T.S.

SHEET TITLE: SUBSURFACE PROFILES (SEAWALLS)

PROJECT NAME: STORMWATER MASTER PLAN MODELING AND DESIGN IMPLEMENTATION

SHEET NO. 9L

RADISE PROJECT NO: 170901

	S-31	S-32
BORING NO.	S-31	S-32
ELEVATION (NAVD 88):	N/A	N/A
LATITUDE:	26.1286°	26.1290°
LONGITUDE:	-80.1221°	-80.1220°
DATE:	07/05/2018	07/05/2018
DRILLER:	T. FICKLING	T. FICKLING
RIG:	CME 45	CME 45

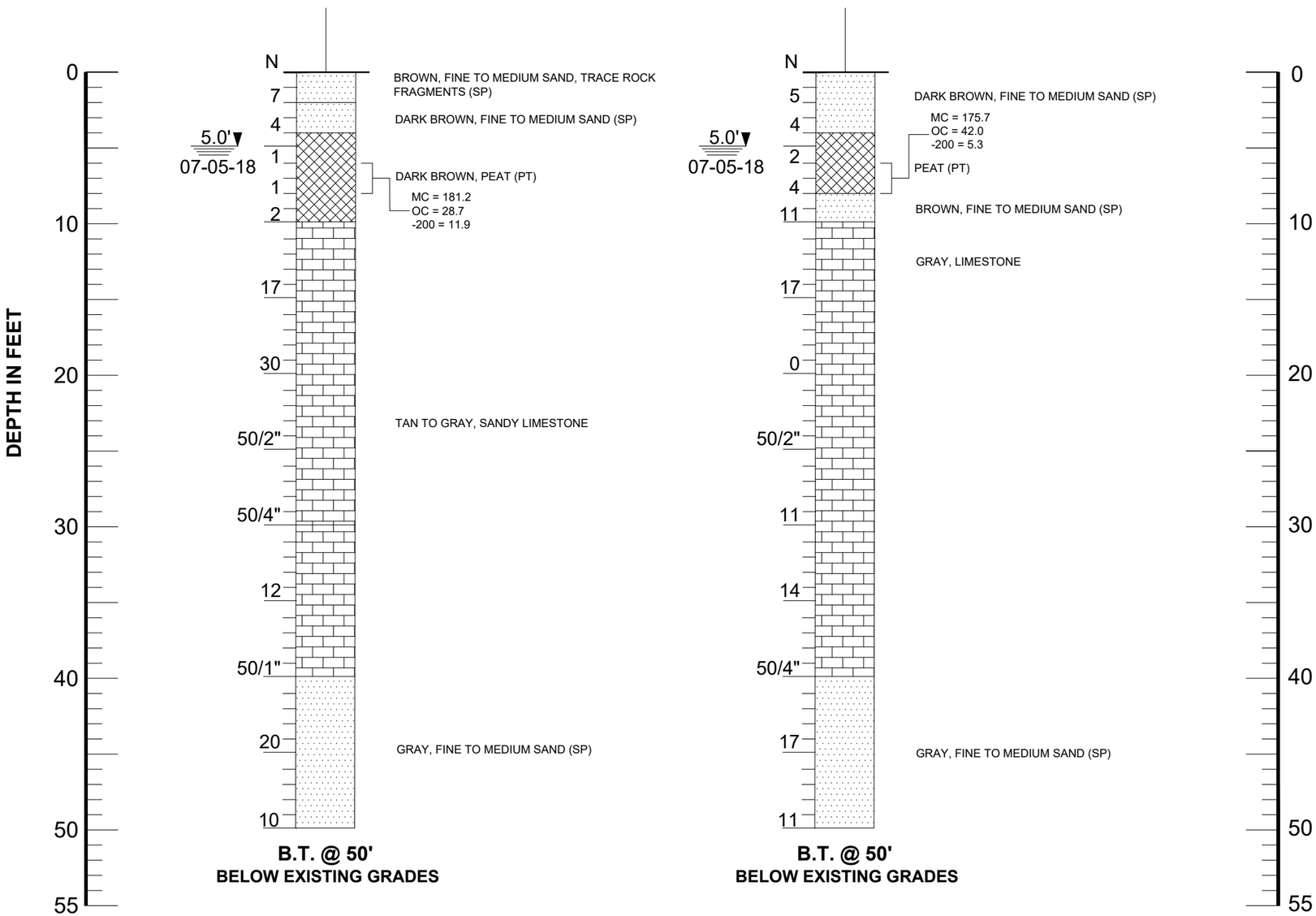

LEGEND

ASPHALT AND BASE	LIMESTONE
SAND	GRAVEL
SILT	ORGANIC MATERIAL

5.0'	GROUNDWATER DEPTH IN FEET AND DRILLING DATE
N	STANDARD PENETRATION RESISTANCE- BLOWS PER FOOT USING AUTOMATIC HAMMER
SP, SP-SM, GP, PT	UNIFIED SOIL CLASSIFICATION SYSTEM GROUP SYMBOL (ASTM D 2488)
S-1	STANDARD PENETRATION TEST (SPT) BORING AND NUMBER
MC	MOISTURE CONTENT (%)
-200	AMOUNT PASSING US STANDARD # 200 SIEVE
OC	ORGANIC CONTENTS (%)
LL	LIQUID LIMIT (%)
PI	PLASTICITY INDEX (%)
B.T. @ 50'	BORING TERMINATED AT 50 FEET BELOW THE EXISTING GROUND SURFACE

NOTES

(1) BORINGS WERE DRILLED ON JULY 07, 2018 USING A CENTRAL MINING EQUIPMENT MODEL 45 (CME 45) AUTOMATIC HAMMER DRILL RIG.

(2) STRATA BOUNDARIES ARE APPROXIMATE AND REPRESENT SOIL AND REPRESENT SOIL STRATA AT EACH TEST HOLE LOCATION ONLY. SOIL TRANSITIONS MAY BE MORE GRADUAL THAN IMPLIED.

(3) GROUNDWATER LEVELS SHOWN ON THE SUBSURFACE PROFILES REPRESENT GROUNDWATER SURFACES ON THE DATES SHOWN. GROUNDWATER LEVELS WILL FLUCTUATE THROUGHOUT THE YEAR.

(4) LONGITUDE AND LATITUDE COORDINATES WERE MEASURED IN THE FIELD USING A HAND HELD GPS UNIT.

(5) ELEVATIONS WERE NOT AVAILABLE

(6) AFTER COMPLETION OF DRILLING BOREHOLES WERE BACK FILLED WITH GROUT.

STANDARD PENETRATION TEST DATA

SPOON INSIDE DIA.	1.375 INCH
SPOON OUTSIDE DIA.	2.0 INCHES
AVG. HAMMER DROP	30 INCHES
HAMMER WEIGHT	140 POUNDS

GRANULAR MATERIALS

RELATIVE DENSITY	AUTOMATIC HAMMER SPT N-VALUE BLOWS/FOOT
VERY LOOSE	LESS THAN 3
LOOSE	3 - 8
MEDIUM	8 - 24
DENSE	24 - 40
VERY DENSE	GREATER THAN 40

REVISIONS

Date.	By	Descriptions	Date.	By	Descriptions

	Names	Dates
Drawn by	AK	07/24/18
Checked by	KA	07/24/18
Designed by		
Checked by		
Approved by		

RADISE

LICENSE NO. - 8901

ENGINEER OF RECORD
RADISE International
4152 West Blue Heron Boulevard, Suite 1114
Riviera Beach, Florida. 33404
TEL 561-841-0103 FAX 561-841-0104
URL : http:// www.radise.net

CITY OF FORT LAUDERDALE
PUBLIC WORKS DEPARTMENT

COUNTY	CLIENT
BROWARD	HAZEN AND SAWYER

SCALE: VERTICAL N.T.S.
SCALE: HORIZONTAL N.T.S.

SHEET TITLE: SUBSURFACE PROFILES (SEAWALLS)

PROJECT NAME: STORMWATER MASTER PLAN MODELING AND DESIGN IMPLEMENTATION

SHEET NO. 9M

RADISE PROJECT NO: 170901

BORING NO.	**S-33**
ELEVATION (NAVD 88):	**N/A**
LATITUDE:	**26.1296°**
LONGITUDE:	**-80.1213°**
DATE:	**07/05/2018**
DRILLER:	**T. FICKLING**
RIG:	**CME 45**

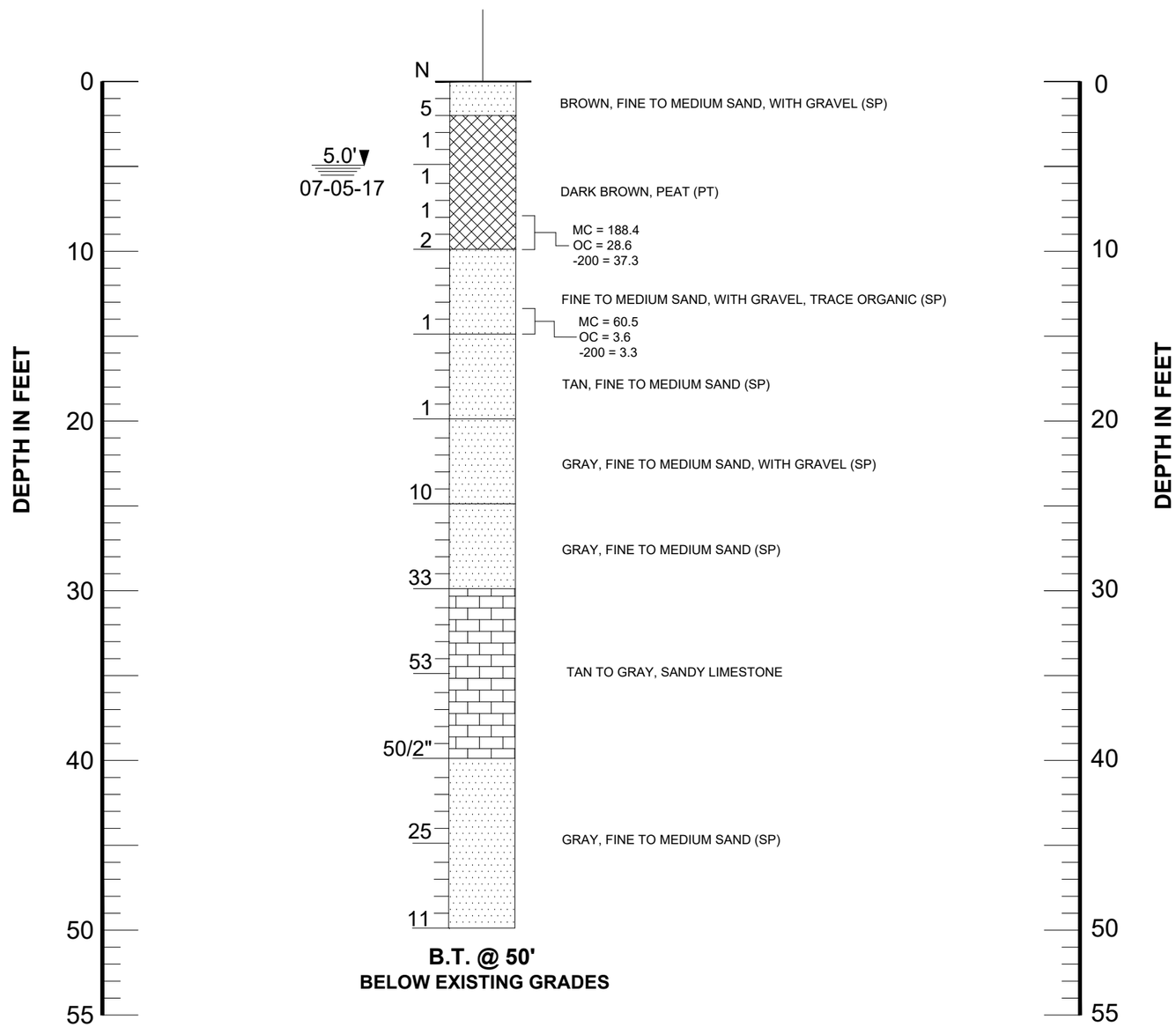

B.T. @ 50'
BELOW EXISTING GRADES

LEGEND

ASPHALT AND BASE
SAND
SILT
LIMESTONE
GRAVEL
ORGANIC MATERIAL

5.0' ▼	GROUNDWATER DEPTH IN FEET AND DRILLING DATE
N	STANDARD PENETRATION RESISTANCE- BLOWS PER FOOT USING AUTOMATIC HAMMER
SP, SP-SM, GP, PT	UNIFIED SOIL CLASSIFICATION SYSTEM GROUP SYMBOL (ASTM D 2488)
S-1	STANDARD PENETRATION TEST (SPT) BORING AND NUMBER
MC	MOISTURE CONTENT (%)
-200	AMOUNT PASSING US STANDARD # 200 SIEVE
OC	ORGANIC CONTENTS (%)
LL	LIQUID LIMIT (%)
PI	PLASTICITY INDEX (%)
B.T. @ 50'	BORING TERMINATED AT 50 FEET BELOW THE EXISTING GROUND SURFACE

NOTES

(1) BORINGS WERE DRILLED ON JULY 07, 2018 USING A CENTRAL MINING EQUIPMENT MODEL 45 (CME 45) AUTOMATIC HAMMER DRILL RIG.

(2) STRATA BOUNDARIES ARE APPROXIMATE AND REPRESENT SOIL AND REPRESENT SOIL STRATA AT EACH TEST HOLE LOCATION ONLY. SOIL TRANSITIONS MAY BE MORE GRADUAL THAN IMPLIED.

(3) GROUNDWATER LEVELS SHOWN ON THE SUBSURFACE PROFILES REPRESENT GROUNDWATER SURFACES ON THE DATES SHOWN. GROUNDWATER LEVELS WILL FLUCTUATE THROUGHOUT THE YEAR.

(4) LONGITUDE AND LATITUDE COORDINATES WERE MEASURED IN THE FIELD USING A HAND HELD GPS UNIT.

(5) ELEVATIONS WERE NOT AVAILABLE

(6) AFTER COMPLETION OF DRILLING BOREHOLES WERE BACK FILLED WITH GROUT.

STANDARD PENETRATION TEST DATA

SPOON INSIDE DIA.	1.375 INCH
SPOON OUTSIDE DIA.	2.0 INCHES
AVG. HAMMER DROP	30 INCHES
HAMMER WEIGHT	140 POUNDS

GRANULAR MATERIALS

RELATIVE DENSITY	AUTOMATIC HAMMER SPT N-VALUE BLOWS/FOOT
VERY LOOSE	LESS THAN 3
LOOSE	3 - 8
MEDIUM	8 - 24
DENSE	24 - 40
VERY DENSE	GREATER THAN 40

REVISIONS

Date.	By	Descriptions	Date.	By	Descriptions

	Names	Dates
Drawn by	AK	07/24/18
Checked by	KA	07/24/18
Designed by		
Checked by		
Approved by		

RADISE
LICENSE NO. - 8901

ENGINEER OF RECORD
RADISE International
4152 West Blue Heron Boulevard, Suite 1114
Riviera Beach, Florida. 33404
TEL 561-841-0103 FAX 561-841-0104
URL : http:// www.radise.net

CITY OF FORT LAUDERDALE
PUBLIC WORKS DEPARTMENT

COUNTY	CLIENT
BROWARD	HAZEN AND SAWYER

SCALE: VERTICAL N.T.S.
SCALE: HORIZONTAL N.T.S.

SHEET TITLE: SUBSURFACE PROFILES (SEAWALLS)

PROJECT NAME: STORMWATER MASTER PLAN MODELING AND DESIGN IMPLEMENTATION

SHEET NO. 9N

RADISE PROJECT NO: 170901

	V-1	V-2	V-3
BORING NO.	V-1	V-2	V-3
ELEVATION (NAVD 88):	N/A	N/A	N/A
LATITUDE:	26.1300°	26.1301°	26.1353°
LONGITUDE:	-80.1335°	-80.1274°	-80.1286°
DATE:	10/23/2017	10/23/2017	10/30/2017
DRILLER:	T. FICKLING	T. FICKLING	T. FICKLING
RIG:	CME 45	CME 45	CME 45

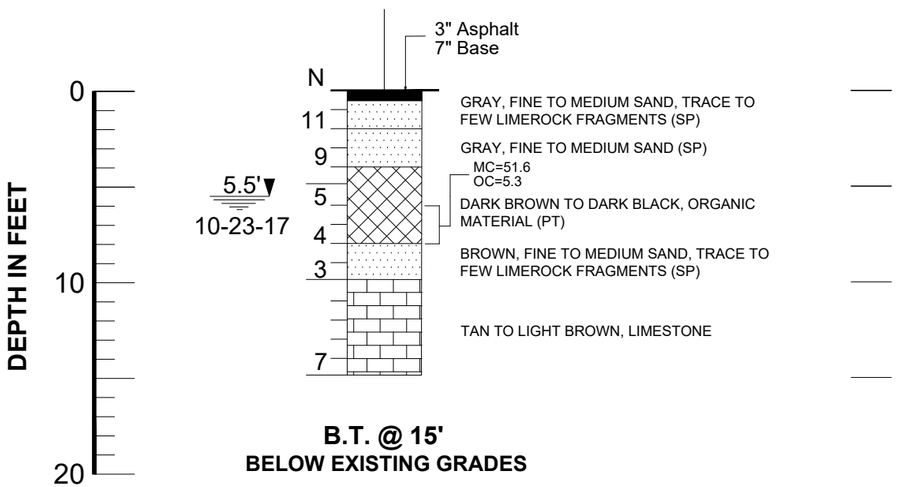

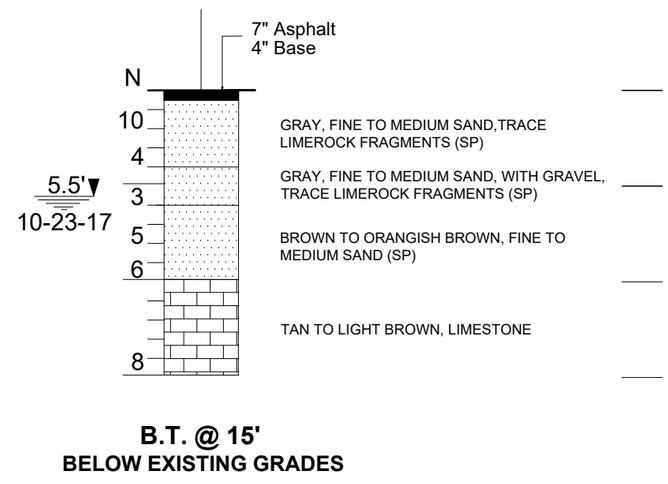

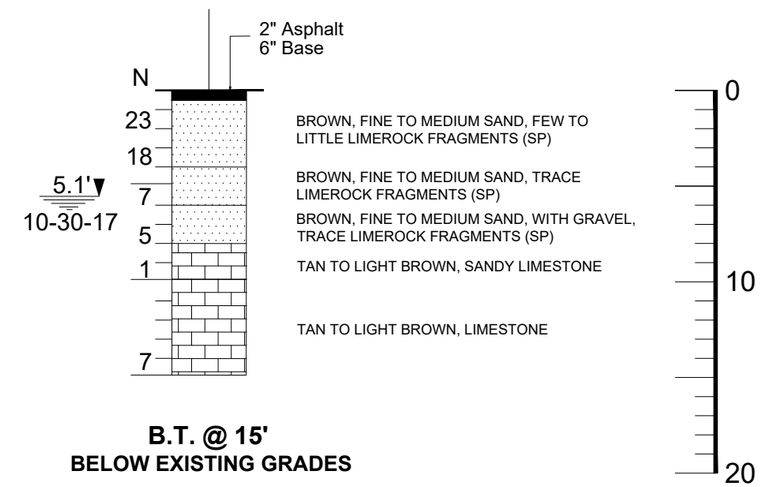

LEGEND

- ASPHALT AND BASE
- LIMESTONE
- SAND
- GRAVEL
- SILTY SAND
- ORGANIC MATERIAL
- 5.5' / 10-23-17 — GROUNDWATER DEPTH IN FEET AND DRILLING DATE
- N — STANDARD PENETRATION RESISTANCE- BLOWS PER FOOT USING AUTOMATIC HAMMER

SP, SP-SM, PT	UNIFIED SOIL CLASSIFICATION SYSTEM GROUP SYMBOL (ASTM D 2488)
V-1	STANDARD PENETRATION TEST (SPT) BORING AND NUMBER
MC	MOISTURE CONTENT (%)
-200	AMOUNT PASSING US STANDARD # 200 SIEVE (%)
OC	ORGANIC CONTENTS (%)
LL	LIQUID LIMIT (%)
PI	PLASTICITY INDEX (%)
B.T. @ 15'	BORING TERMINATED AT 15 FEET BELOW THE EXISTING GROUND SURFACE

NOTES

(1) BORING WERE DRILLED ON SEPTEMBER AND OCTOBER, 2017 USING A CENTRAL MINING EQUIPMENT MODEL 45 (CME 45) AUTOMATIC HAMMER DRILL RIG.

(2) STRATA BOUNDARIES ARE APPROXIMATE AND REPRESENT SOIL AND REPRESENT SOIL STRATA AT EACH TEST HOLE LOCATION ONLY. SOIL TRANSITIONS MAY BE MORE GRADUAL THAN IMPLIED.

(3) GROUNDWATER LEVELS SHOWN ON THE SUBSURFACE PROFILES REPRESENT GROUNDWATER SURFACES ON THE DATES SHOWN. GROUNDWATER LEVELS WILL FLUCTUATE THROUGHOUT THE YEAR.

(4) LONGITUDE AND LATITUDE COORDINATES WERE MEASURED IN THE FIELD USING A HAND HELD GPS UNIT.

(5) ELEVATIONS WERE NOT AVAILABLE

(6) AFTER COMPLETION OF DRILLING BOREHOLES WERE BACK FILLED WITH GROUT.

GRANULAR MATERIALS

RELATIVE DENSITY	AUTOMATIC HAMMER SPT N-VALUE BLOWS/FOOT
VERY LOOSE	LESS THAN 3
LOOSE	3 - 8
MEDIUM	8 - 24
DENSE	24 - 40
VERY DENSE	GREATER THAN 40

STANDARD PENETRATION TEST DATA

SPOON INSIDE DIA.	1.375 INCH
SPOON OUTSIDE DIA.	2.0 INCHES
AVG. HAMMER DROP	30 INCHES
HAMMER WEIGHT	140 POUNDS

REVISIONS

Date.	By	Descriptions	Date.	By	Descriptions

	Names	Dates
Drawn by	KA	11/06/17
Checked by	AB	11/06/17
Designed by		
Checked by		
Approved by		

RADISE — Infrastructure Engineers & Software Developers

LICENSE NO. - 8901

ENGINEER OF RECORD
RADISE International
4152 West Blue Heron Boulevard, Suite 1114
Riviera Beach, Florida. 33404
TEL 561-841-0103 FAX 561-841-0104
URL : http:// www.radise.net

CITY OF FORT LAUDERDALE
PUBLIC WORKS DEPARTMENT

COUNTY	CLIENT
BROWARD	HAZEN AND SAWYER

SCALE: VERTICAL N.T.S.
SCALE: HORIZONTAL N.T.S.

SHEET TITLE: SUBSURFACE PROFILES (VICTORIA PARK)

PROJECT NAME: STORMWATER MASTERPLAN MODELING AND DESIGN IMPLEMENTATION

SHEET NO. 10A

RADISE PROJECT NO: 170901

	V-4	V-5	V-6
BORING NO.	V-4	V-5	V-6
ELEVATION (NAVD 88):	N/A	N/A	N/A
LATITUDE:	26.1338°	26.1320°	26.1289°
LONGITUDE:	-80.1266°	-80.1234°	-80.1229°
DATE:	10/23/2017	10/30/2017	10/23/2017
DRILLER:	T. FICKLING	T. FICKLING	T. FICKLING
RIG:	CME 45	CME 45	CME 45

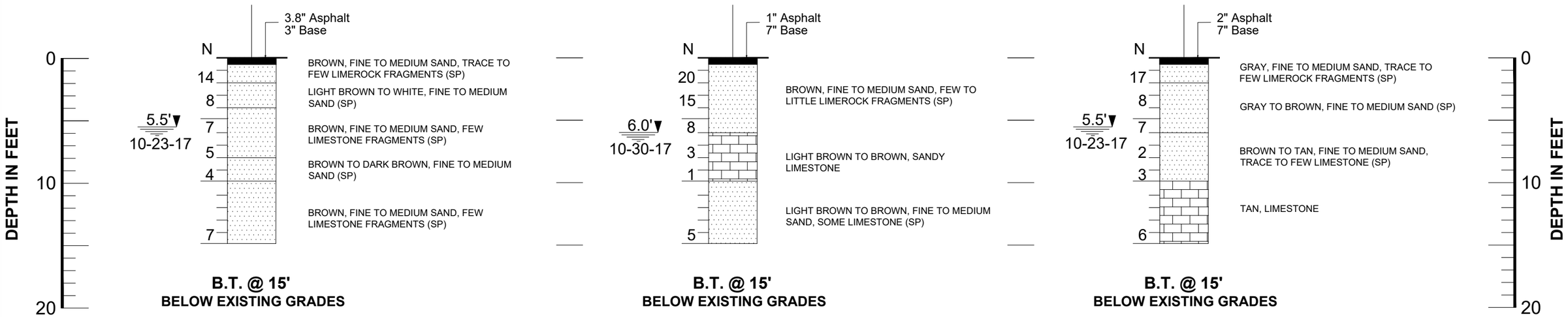

LEGEND

- ASPHALT AND BASE
- LIMESTONE
- SAND
- GRAVEL
- SILTY SAND
- ORGANIC MATERIAL
- 5.5' ▼ / 10-23-17 — GROUNDWATER DEPTH IN FEET AND DRILLING DATE
- N — STANDARD PENETRATION RESISTANCE- BLOWS PER FOOT USING AUTOMATIC HAMMER

SP, SP-SM, PT	UNIFIED SOIL CLASSIFICATION SYSTEM GROUP SYMBOL (ASTM D 2488)
V-1	STANDARD PENETRATION TEST (SPT) BORING AND NUMBER
MC	MOISTURE CONTENT (%)
-200	AMOUNT PASSING US STANDARD # 200 SIEVE (%)
OC	ORGANIC CONTENTS (%)
LL	LIQUID LIMIT (%)
PI	PLASTICITY INDEX (%)
B.T. @ 15'	BORING TERMINATED AT 15 FEET BELOW THE EXISTING GROUND SURFACE

NOTES

(1) BORING WERE DRILLED ON SEPTEMBER AND OCTOBER, 2017 USING A CENTRAL MINING EQUIPMENT MODEL 45 (CME 45) AUTOMATIC HAMMER DRILL RIG.

(2) STRATA BOUNDARIES ARE APPROXIMATE AND REPRESENT SOIL AND REPRESENT SOIL STRATA AT EACH TEST HOLE LOCATION ONLY. SOIL TRANSITIONS MAY BE MORE GRADUAL THAN IMPLIED.

(3) GROUNDWATER LEVELS SHOWN ON THE SUBSURFACE PROFILES REPRESENT GROUNDWATER SURFACES ON THE DATES SHOWN. GROUNDWATER LEVELS WILL FLUCTUATE THROUGHOUT THE YEAR.

(4) LONGITUDE AND LATITUDE COORDINATES WERE MEASURED IN THE FIELD USING A HAND HELD GPS UNIT.

(5) ELEVATIONS WERE NOT AVAILABLE

(6) AFTER COMPLETION OF DRILLING BOREHOLES WERE BACK FILLED WITH GROUT.

GRANULAR MATERIALS

RELATIVE DENSITY	AUTOMATIC HAMMER SPT N-VALUE BLOWS/FOOT
VERY LOOSE	LESS THAN 3
LOOSE	3 - 8
MEDIUM	8 - 24
DENSE	24 - 40
VERY DENSE	GREATER THAN 40

STANDARD PENETRATION TEST DATA

SPOON INSIDE DIA.	1.375 INCH
SPOON OUTSIDE DIA.	2.0 INCHES
AVG. HAMMER DROP	30 INCHES
HAMMER WEIGHT	140 POUNDS

REVISIONS

Date.	By	Descriptions	Date.	By	Descriptions

	Names	Dates
Drawn by	KA	11/06/17
Checked by	AB	11/06/17
Designed by		
Checked by		
Approved by		

RADISE — Infrastructure Engineers & Software Developers

LICENSE NO. - 8901

ENGINEER OF RECORD
RADISE International
4152 West Blue Heron Boulevard, Suite 1114
Riviera Beach, Florida. 33404
TEL 561-841-0103 FAX 561-841-0104
URL : http:// www.radise.net

CITY OF FORT LAUDERDALE
PUBLIC WORKS DEPARTMENT

COUNTY	CLIENT
BROWARD	HAZEN AND SAWYER

SCALE: VERTICAL N.T.S.
SCALE: HORIZONTAL N.T.S.

SHEET TITLE: SUBSURFACE PROFILES (VICTORIA PARK)

PROJECT NAME: STORMWATER MASTER PLAN MODELING AND DESIGN IMPLEMENTATION

SHEET NO. 10B

RADISE PROJECT NO: 170901

	V-8	V-9
BORING NO.	V-8	V-9
ELEVATION (NAVD 88):	N/A	N/A
LATITUDE:	26.1323°	26.1321°
LONGITUDE:	-80.1194°	-80.1192°
DATE:	10/19/2017	09/28/2017
DRILLER:	T. FICKLING	T. FICKLING
RIG:	CME 45	CME 45

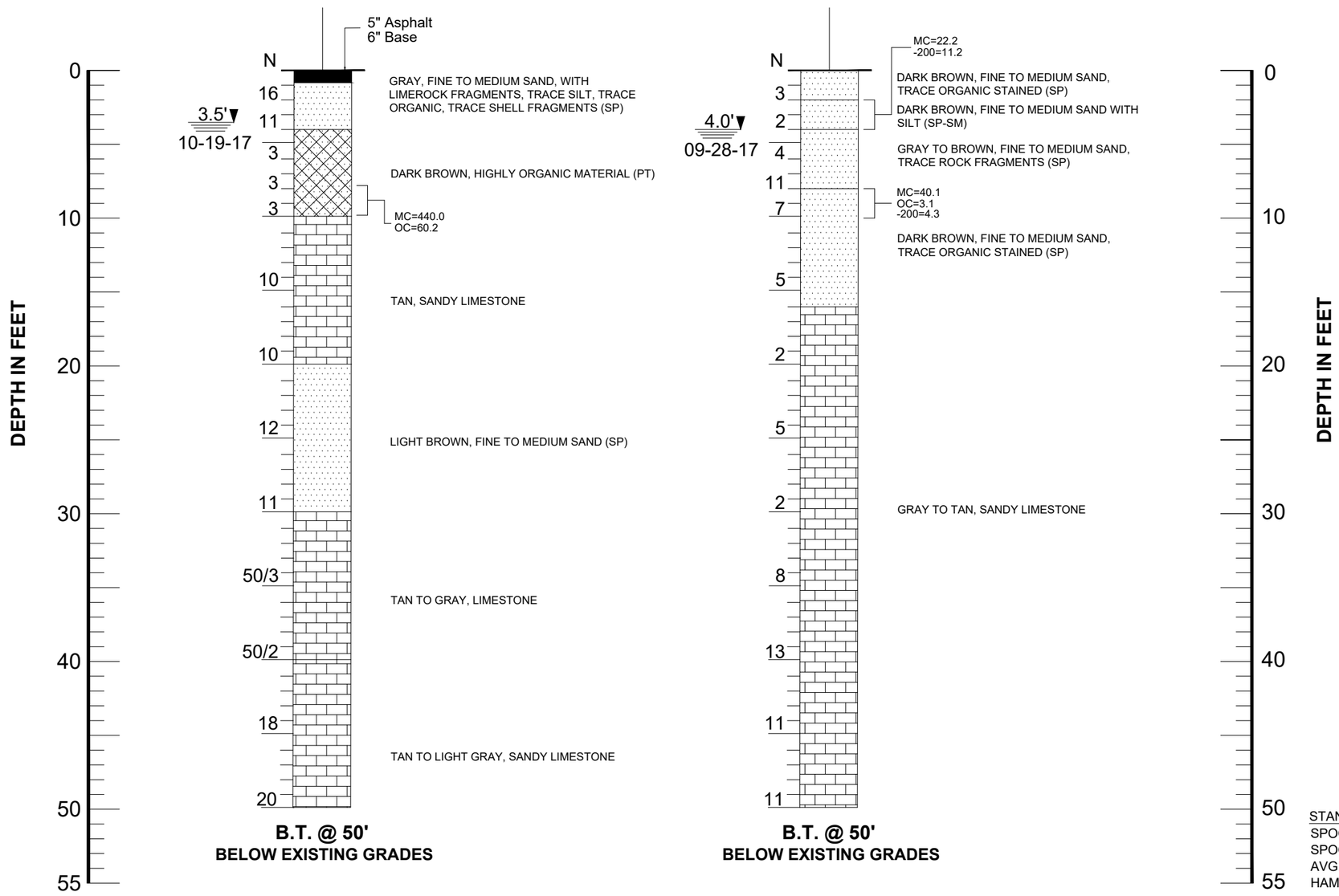

LEGEND

- SAND
- SILT
- ORGANIC MATERIAL
- SHELLY SAND
- LIMESTONE
- GRAVEL

1.5' / 09-21-17	GROUNDWATER DEPTH IN FEET AND DRILLING DATE
N	STANDARD PENETRATION RESISTANCE- BLOWS PER FOOT USING AUTOMATIC HAMMER
SP	UNIFIED SOIL CLASSIFICATION SYSTEM GROUP SYMBOL (ASTM D 2488)
V-9	STANDARD PENETRATION TEST (SPT) BORING AND NUMBER
MC	MOISTURE CONTENT (%)
-200	AMOUNT PASSING US STANDARD # 200 SIEVE
OC	ORGANIC CONTENTS (%)
LL	LIQUID LIMIT (%)
PI	PLASTICITY INDEX (%)
B.T. @ 50'	BORING TERMINATED AT 50 FEET BELOW THE EXISTING GROUND SURFACE

NOTES

(1) BORINGS WERE DRILLED ON SEPTEMBER, 2017 USING A CENTRAL MINING EQUIPMENT MODEL 45 (CME 45) AUTOMATIC HAMMER DRILL RIG.

(2) STRATA BOUNDARIES ARE APPROXIMATE AND REPRESENT SOIL AND REPRESENT SOIL STRATA AT EACH TEST HOLE LOCATION ONLY. SOIL TRANSITIONS MAY BE MORE GRADUAL THAN IMPLIED.

(3) GROUNDWATER LEVELS SHOWN ON THE SUBSURFACE PROFILES REPRESENT GROUNDWATER SURFACES ON THE DATES SHOWN. GROUNDWATER LEVELS WILL FLUCTUATE THROUGHOUT THE YEAR.

(4) LONGITUDE AND LATITUDE COORDINATES WERE MEASURED IN THE FIELD USING A HAND HELD GPS UNIT.

(5) ELEVATIONS WERE NOT AVAILABLE

(6) AFTER COMPLETION OF DRILLING BOREHOLES WERE BACK FILLED WITH GROUT.

STANDARD PENETRATION TEST DATA

SPOON INSIDE DIA.	1.375 INCH
SPOON OUTSIDE DIA.	2.0 INCHES
AVG. HAMMER DROP	30 INCHES
HAMMER WEIGHT	140 POUNDS

GRANULAR MATERIALS

RELATIVE DENSITY	AUTOMATIC HAMMER SPT N-VALUE BLOWS/FOOT
VERY LOOSE	LESS THAN 3
LOOSE	3 - 8
MEDIUM	8 - 24
DENSE	24 - 40
VERY DENSE	GREATER THAN 40

REVISIONS

Date.	By	Descriptions	Date.	By	Descriptions

	Names	Dates
Drawn by	ML	10/13/17
Checked by	AB	10/13/17
Designed by		
Checked by		
Approved by		

RADISE
Infrastructure Engineers & Software Developers
LICENSE NO. - 8901

ENGINEER OF RECORD
RADISE International
4152 West Blue Heron Boulevard, Suite 1114
Riviera Beach, Florida. 33404
TEL 561-841-0103 FAX 561-841-0104
URL : http:// www.radise.net

CITY OF FORT LAUDERDALE
PUBLIC WORKS DEPARTMENT

COUNTY	CLIENT
BROWARD	HAZEN AND SAWYER

SCALE: VERTICAL N.T.S.
SCALE: HORIZONTAL N.T.S.

SHEET TITLE: SUBSURFACE PROFILES (VICTORIA PARK)

PROJECT NAME: STORMWATER MASTER PLAN MODELING AND DESIGN IMPLEMENTATION

SHEET NO. 10C

RADISE PROJECT NO: 170901

	V-7	V-10
BORING NO.	V-7	V-10
ELEVATION (NAVD 88):	N/A	N/A
LATITUDE:	26.1321°	26.1345°
LONGITUDE:	-80.1208°	-80.1196°
DATE:	10/23/2017	10/23/2017
DRILLER:	T. FICKLING	T. FICKLING
RIG:	CME 45	CME 45

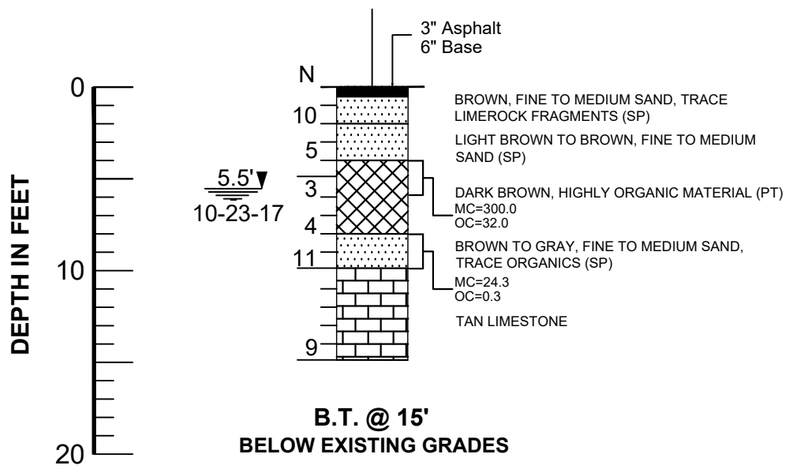

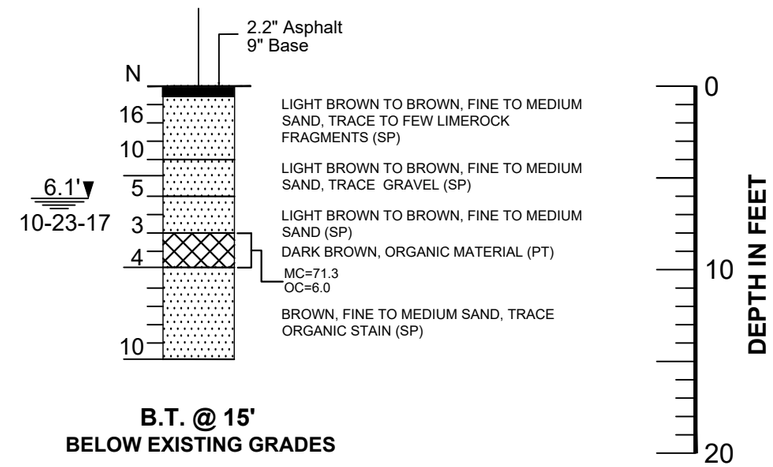

LEGEND

- ASPHALT AND BASE
- LIMESTONE
- SAND
- GRAVEL
- SILTY SAND
- ORGANIC MATERIAL
- 5.5' / 10-23-17 — GROUNDWATER DEPTH IN FEET AND DRILLING DATE
- N — STANDARD PENETRATION RESISTANCE- BLOWS PER FOOT USING AUTOMATIC HAMMER

SP, SP-SM, PT	UNIFIED SOIL CLASSIFICATION SYSTEM GROUP SYMBOL (ASTM D 2488)
V-1	STANDARD PENETRATION TEST (SPT) BORING AND NUMBER
MC	MOISTURE CONTENT (%)
-200	AMOUNT PASSING US STANDARD # 200 SIEVE (%)
OC	ORGANIC CONTENTS (%)
LL	LIQUID LIMIT (%)
PI	PLASTICITY INDEX (%)
B.T. @ 15'	BORING TERMINATED AT 15 FEET BELOW THE EXISTING GROUND SURFACE

NOTES

(1) BORING WERE DRILLED ON SEPTEMBER AND OCTOBER, 2017 USING A CENTRAL MINING EQUIPMENT MODEL 45 (CME 45) AUTOMATIC HAMMER DRILL RIG.

(2) STRATA BOUNDARIES ARE APPROXIMATE AND REPRESENT SOIL AND REPRESENT SOIL STRATA AT EACH TEST HOLE LOCATION ONLY. SOIL TRANSITIONS MAY BE MORE GRADUAL THAN IMPLIED.

(3) GROUNDWATER LEVELS SHOWN ON THE SUBSURFACE PROFILES REPRESENT GROUNDWATER SURFACES ON THE DATES SHOWN. GROUNDWATER LEVELS WILL FLUCTUATE THROUGHOUT THE YEAR.

(4) LONGITUDE AND LATITUDE COORDINATES WERE MEASURED IN THE FIELD USING A HAND HELD GPS UNIT.

(5) ELEVATIONS WERE NOT AVAILABLE

(6) AFTER COMPLETION OF DRILLING BOREHOLES WERE BACK FILLED WITH GROUT.

GRANULAR MATERIALS

RELATIVE DENSITY	AUTOMATIC HAMMER SPT N-VALUE BLOWS/FOOT
VERY LOOSE	LESS THAN 3
LOOSE	3 - 8
MEDIUM	8 - 24
DENSE	24 - 40
VERY DENSE	GREATER THAN 40

STANDARD PENETRATION TEST DATA

SPOON INSIDE DIA.	1.375 INCH
SPOON OUTSIDE DIA.	2.0 INCHES
AVG. HAMMER DROP	30 INCHES
HAMMER WEIGHT	140 POUNDS

REVISIONS

Date.	By	Descriptions	Date.	By	Descriptions

	Names	Dates
Drawn by	KA	11/06/17
Checked by	AB	11/06/17
Designed by		
Checked by		
Approved by		

RADISE — Infrastructure Engineers & Software Developers — LICENSE NO. - 8901

ENGINEER OF RECORD
RADISE International
4152 West Blue Heron Boulevard, Suite 1114
Riviera Beach, Florida. 33404
TEL 561-841-0103 FAX 561-841-0104
URL : http:// www.radise.net

CITY OF FORT LAUDERDALE
PUBLIC WORKS DEPARTMENT

COUNTY	CLIENT
BROWARD	HAZEN AND SAWYER

SCALE: VERTICAL N.T.S.
SCALE: HORIZONTAL N.T.S.

SHEET TITLE: SUBSURFACE PROFILES (VICTORIA PARK)

PROJECT NAME: STORMWATER MASTER PLAN MODELING AND DESIGN IMPLEMENTATION

SHEET NO. 10D

RADISE PROJECT NO: 170901

APPENDIX A

TABLE A-1 – LABORATORY TEST RESULTS SUMMARY
GRAIN SIZE DISTRIBUTION

Table A: Laboratory Test Results Summary

Project Name: City of Fort Lauderdale - Stormwater Master Plan Modeling and Design Implementation

Project ID: 170901

						ATTERBERG LIMITS			GRAIN SIZE ANALYSIS U.S STANDARD SIEVE SIZE (% Passing)													
Boring No	Sample Depth	Soil Classification	Moisture Content (%)	Organic Content (%)	-200	LL (%)	PL (%)	PI	3"	1.5"	1"	3/4"	3/8"	#4	#10	#20	#40	#50	#60	#100	#140	#200
DR-1	28.5' - 30'	SM	19.1	-	12.7	-	-	-	-	-	-	-	-	-	-	-	-	-	-	-	-	-
DR-2	4' - 6'	SP	26.6	0.8	-	-	-	-	-	-	-	-	-	-	-	-	-	-	-	-	-	-
DR-3	8' - 10'	SP	20.0	0.2	-	-	-	-	-	-	-	-	-	-	-	-	-	-	-	-	-	-
DR-4	8' - 10'	SP	21.5	2.2	-	-	-	-	-	-	-	-	-	-	-	-	-	-	-	-	-	-
DR-5	4' - 6'	SP	25.9	0.7	-	-	-	-	-	-	-	-	-	-	-	-	-	-	-	-	-	-
D-1	6' - 8'	SP	22.8	-	1.7	-	-	-	100	100	-	100	100	100	100	100	86.2	64.0	49.5	11.5	2.6	1.7
D-1	8' -10'	SP	27.3	1.1	2.3	-	-	-	-	-	-	-	-	-	-	-	-	-	-	-	-	-
D-2	6' - 8'	SP	32.9	3.2	3.7	-	-	-	100	100	-	100	100	100	98.9	98.1	88.7	64.4	48.3	8.8	4.2	3.7
D-2	8' - 10'	SP-SM	22.1	-	10.8	-	-	-	-	-	-	-	-	-	-	-	-	-	-	-	-	-
D-3	0' - 2'	SP-SM	7.5	-	8.2	-	-	-	100	100	-	100	92.1	90.1	88.5	87.0	78.3	62.2	50.5	14.9	9.3	8.2
D-3	4' - 6'	SP	21.5	-	1.4	-	-	-	-	-	-	-	-	-	-	-	-	-	-	-	-	-
D-5	8' - 10'	SP	27.8	1.3	-	-	-	-	-	-	-	-	-	-	-	-	-	-	-	-	-	-
P-1	13.5' 15'	SP	20.8	0.9	-	-	-	-	-	-	-	-	-	-	-	-	-	-	-	-	-	-
P-4	6' - 8'	SP	16.9	-	4.4	-	-	-	100	100	-	100	93.9	87.5	83.3	81.1	71.9	57.8	44.5	9.8	5.2	4.4
P-5	4' - 6'	SP	26.7	1.3	-	-	-	-	-	-	-	-	-	-	-	-	-	-	-	-	-	-
P-6	28.5' - 30'	SP-SM	25.7	-	7.2	-	-	-	-	-	-	-	-	-	-	-	-	-	-	-	-	-
V-1	6' - 8'	PT	51.6	5.3	-	-	-	-	-	-	-	-	-	-	-	-	-	-	-	-	-	-
V-7	4' - 6'	PT	300.0	32.0	-	-	-	-	-	-	-	-	-	-	-	-	-	-	-	-	-	-
V-7	8' - 10'	SP	24.3	0.3	-	-	-	-	-	-	-	-	-	-	-	-	-	-	-	-	-	-

Table A: Laboratory Test Results Summary

Project Name: City of Fort Lauderdale - Stormwater Master Plan Modeling and Design Implementation

Project ID: 170901

						ATTERBERG LIMITS			GRAIN SIZE ANALYSIS U.S STANDARD SIEVE SIZE (% Passing)													
Boring No	Sample Depth	Soil Classification	Moisture Content (%)	Organic Content (%)	-200	LL (%)	PL (%)	PI	3"	1.5"	1"	3/4"	3/8"	#4	#10	#20	#40	#50	#60	#100	#140	#200
V-8	8' - 10'	PT	440.5	60.2	-	-	-	-	-	-	-	-	-	-	-	-	-	-	-	-	-	-
V-9	2' - 4'	SP-SM	22.2	-	11.2	-	-	-	100	100	-	100	92.3	90.1	88.7	87.5	79.6	67.1	56.9	21.2	12.5	11.2
V-9	8' - 10'	SP	40.1	3.1	4.3	-	-	-	-	-	-	-	-	-	-	-	-	-	-	-	-	-
V-10	8' - 10'	PT	71.3	6.0	-	-	-	-	-	-	-	-	-	-	-	-	-	-	-	-	-	-
E-11	2' - 4'	SP	17.8	0.3	-	-	-	-	-	-	-	-	-	-	-	-	-	-	-	-	-	-
R-1	0' - 2'	SP-SM	8.1	-	8.3	-	-	-	100	100	-	95.1	80.3	75.2	72.1	70.3	62.8	52.1	43.5	15.6	9.7	8.3
R-2	2' - 4'	SP-SM	14.0	-	7.3	-	-	-	100	100	-	90.7	78.8	70.6	64.6	61.1	54.8	46.5	40.1	15.8	9.2	7.3
R-2	4' - 6'	SP	18.2	-	4.4	-	-	-	-	-	-	-	-	-	-	-	-	-	-	-	-	-
R-3	2' - 4'	SP	20.1	0.6	-	-	-	-	-	-	-	-	-	-	-	-	-	-	-	-	-	-
R-4	0' - 2'	SP	14.5	2.1	-	-	-	-	-	-	-	-	-	-	-	-	-	-	-	-	-	-
R-5	6' - 8'	SP	27.4	0.1	-	-	-	-	-	-	-	-	-	-	-	-	-	-	-	-	-	-
R-6	2' - 4'	SP-SM	16.8	-	8.1	-	-	-	100	100	-	93.0	87.2	82.5	80.4	78.5	72.6	62.3	52.7	17.5	10.3	8.1
R-6	6' - 8'	SP	24.1	0.1	-	-	-	-	-	-	-	-	-	-	-	-	-	-	-	-	-	-
R-9	4' - 6'	SP	56.3	10.2	1.7	-	-	-	-	-	-	-	-	-	-	-	-	-	-	-	-	-
R-9	13.5' - 15'	SP	26.5	-	1.2	-	-	-	100	100	100	100	100	100	100	100	95.4	79.9	64.3	8.8	1.6	1.2
R-10	2' - 4'	SP	51.4	18.4	2.2	-	-	-	-	-	-	-	-	-	-	-	-	-	-	-	-	-
R-10	28.5' - 30'	SP	25.6	-	2.7	-	-	-	100	100	100	100	100	100	100	99.1	77.8	55.0	43.5	13.8	3.5	2.7
R-11	4' - 6'	SP	27.0	0.9	-	-	-	-	-	-	-	-	-	-	-	-	-	-	-	-	-	-
R-11	8' - 10'	SP	24.8	0.4	-	-	-	-	-	-	-	-	-	-	-	-	-	-	-	-	-	-

Table A: Laboratory Test Results Summary

Project Name: City of Fort Lauderdale - Stormwater Master Plan Modeling and Design Implementation

Project ID: 170901

						ATTERBERG LIMITS			GRAIN SIZE ANALYSIS U.S STANDARD SIEVE SIZE (% Passing)													
Boring No	Sample Depth	Soil Classification	Moisture Content (%)	Organic Content (%)	-200	LL (%)	PL (%)	PI	3"	1.5"	1"	3/4"	3/8"	#4	#10	#20	#40	#50	#60	#100	#140	#200
R-11	38.5' - 40'	SP-SM	19.0	-	9.3	-	-	-	-	-	-	-	-	-	-	-	-	-	-	-	-	-
R-11	48.5' - 50'	SP-SM	26.2	-	8.7	-	-	-	-	-	-	-	-	-	-	-	-	-	-	-	-	-
R-12	0' - 2'	SP	20.2	0.3	-	-	-	-	-	-	-	-	-	-	-	-	-	-	-	-	-	-
R-12	4' - 6'	PT	107.6	9.9	-	-	-	-	-	-	-	-	-	-	-	-	-	-	-	-	-	-
R-12	38.5' - 40'	SP-SM	18.7	-	11.1	-	-	-	100	100	-	100	100	100	100	98.4	81.6	64.5	54.8	28.0	14.5	11.1
R-13	2' - 4'	SP	20.7	0.6	-	-	-	-	-	-	-	-	-	-	-	-	-	-	-	-	-	-
S-2	6' - 8'	PT	494.0	76.9	-	-	-	-	-	-	-	-	-	-	-	-	-	-	-	-	-	-
S-3	6' - 8'	SP	27.8	1.4	-	-	-	-	-	-	-	-	-	-	-	-	-	-	-	-	-	-
S-4	6' - 8'	PT	110.6	12.4	-	-	-	-	-	-	-	-	-	-	-	-	-	-	-	-	-	-
S-5	4' - 6'	PT	399.1	63.0	-	-	-	-	-	-	-	-	-	-	-	-	-	-	-	-	-	-
S-8	4' - 6'	PT/SP-SM	119.1	11.9	-	-	-	-	-	-	-	-	-	-	-	-	-	-	-	-	-	-
S-8	6' - 8'	SP-SM	33.4	1.6	-	-	-	-	-	-	-	-	-	-	-	-	-	-	-	-	-	-
S-8	13.5' - 15'	ML	27.6	-	69.3	NP	NP	NA	-	-	-	-	-	-	-	-	-	-	-	-	-	-
S-9	0' - 2'	SP-SM	14.9	-	7.1	-	-	-	100	100	100	100	96.8	90.6	85.9	82.0	71.8	61.2	52.1	30.2	12.1	7.1
S-9	6' - 8'	SP	21.3	-	2.6	-	-	-	100	100	-	100	99.6	99.2	98.7	97.7	81.9	57.4	42.2	6.3	3.1	2.6
S-10	4' - 6'	SP	21.3	0.3	-	-	-	-	-	-	-	-	-	-	-	-	-	-	-	-	-	-
S-10	6' - 8'	SP	18.9	0.3	-	-	-	-	-	-	-	-	-	-	-	-	-	-	-	-	-	-
S-11	2' - 4'	SP-SM	18.9	-	11.3	-	-	-	100	100	-	92.5	81.2	77.9	74.8	71.7	62.0	49.1	39.5	15.1	11.7	11.3
S-11	4' - 6'	SP	19.9	0.3	-	-	-	-	-	-	-	-	-	-	-	-	-	-	-	-	-	-

Table A: Laboratory Test Results Summary

Project Name: City of Fort Lauderdale - Stormwater Master Plan Modeling and Design Implementation

Project ID: 170901

						ATTERBERG LIMITS			GRAIN SIZE ANALYSIS U.S STANDARD SIEVE SIZE (% Passing)													
Boring No	Sample Depth	Soil Classification	Moisture Content (%)	Organic Content (%)	-200	LL (%)	PL (%)	PI	3"	1.5"	1"	3/4"	3/8"	#4	#10	#20	#40	#50	#60	#100	#140	#200
S-12	0' - 2'	SM	16.6	-	18.4	-	-	-	100	100	100	94.0	80.9	72.3	65.9	61.4	54.3	46.0	40.0	23.8	19.9	18.4
S-12	4' - 6'	SP	23.0	1.0	-	-	-	-	-	-	-	-	-	-	-	-	-	-	-	-	-	-
S-13	0' - 2'	SP	24.9	0.4	-	-	-	-	-	-	-	-	-	-	-	-	-	-	-	-	-	-
S-13	4' - 6'	SP-SM	18.4	-	11.0	-	-	-	100	100	-	100	74.1	66.7	63.1	61.2	55.6	46.2	38.0	15.7	12.3	11.0
S-13	8' -10'	SM	25.9	1.5	12.7	-	-	-	-	-	-	-	-	-	-	-	-	-	-	-	-	-
S-14	0' - 2'	SP	13.5	3.8	-	-	-	-	-	-	-	-	-	-	-	-	-	-	-	-	-	-
S-14	6' - 8'	PT	205.5	25.6	-	-	-	-	-	-	-	-	-	-	-	-	-	-	-	-	-	-
S-15	0' - 2'	SP	18.9	2.3	-	-	-	-	-	-	-	-	-	-	-	-	-	-	-	-	-	-
S-15	4' - 6'	PT	456.1	65.8	-	-	-	-	-	-	-	-	-	-	-	-	-	-	-	-	-	-
S-16	0' - 2'	SP-SM	11.3	-	8.1	-	-	-	100	100	-	95.0	85.1	79.2	74.7	72.1	62.7	50.6	42.4	17.8	9.7	8.1
S-16	4' - 6'	PT/SP-SM	101.2	14.1	-	-	-	-	-	-	-	-	-	-	-	-	-	-	-	-	-	-
S-16	8' - 10'	SP	35.0	2.8	-	-	-	-	-	-	-	-	-	-	-	-	-	-	-	-	-	-
S-17	6' - 8'	PT	527.3	62.1	-	-	-	-	-	-	-	-	-	-	-	-	-	-	-	-	-	-
S-17	23.5' - 25'	SP	25.6	-	3.1	-	-	-	100	100	-	100	100	100	100	99.4	92.4	82.3	76.5	24.6	5.4	3.1
S-18	6' - 8'	PT	240.4	25.7	-	-	-	-	-	-	-	-	-	-	-	-	-	-	-	-	-	-
S-19	0' - 2'	SM	13.9	-	16.1	-	-	-	100	100	-	96.3	81.0	69.0	61.8	57.4	48.7	39.9	34.8	21.1	17.6	16.1
S-20	4' - 6'	PT/SP-SM	169.7	17.2	-	-	-	-	-	-	-	-	-	-	-	-	-	-	-	-	-	-
S-20	8' - 10'	SM	60.9	-	26.8	-	-	-	-	-	-	-	-	-	-	-	-	-	-	-	-	-
S-20	28.5' - 30'	SP-SM	27.1	-	6.2	-	-	-	100	100	-	100	100	100	100	100	97.4	96.5	96.1	53.6	12.0	6.2

Table A: Laboratory Test Results Summary

Project Name: City of Fort Lauderdale - Stormwater Master Plan Modeling and Design Implementation

Project ID: 170901

						ATTERBERG LIMITS			GRAIN SIZE ANALYSIS U.S STANDARD SIEVE SIZE (% Passing)													
Boring No	Sample Depth	Soil Classification	Moisture Content (%)	Organic Content (%)	-200	LL (%)	PL (%)	PI	3"	1.5"	1"	3/4"	3/8"	#4	#10	#20	#40	#50	#60	#100	#140	#200
S-21	4' - 6'	PT	347.0	50.6	-	-	-	-	-	-	-	-	-	-	-	-	-	-	-	-	-	-
S-21	8' - 10'	SP	26.2	-	1.6	-	-	-	100	100	-	100	100	100	100	98.9	84.8	62.1	48.9	9.8	2.4	1.6
S-22	2 '- 4'	SM	13.9	-	17.2	-	-	-	100	100	-	100	84.3	73.3	66.0	61.3	53.2	45.5	40.6	24.8	19.0	17.2
S-22	4' - 6'	CL-ML/PT	88.7	10.7	54.2	52	44	8	-	-	-	-	-	-	-	-	-	-	-	-	-	-
S-22	8' - 10'	PT	535.3	67.3	-	-	-	-	-	-	-	-	-	-	-	-	-	-	-	-	-	-
S-23	6' - 8'	CL-ML/PT	118.7	12.7	64.9	65	59.3	5.7	-	-	-	-	-	-	-	-	-	-	-	-	-	-
S-23	8' - 10'	PT	519.8	66.7	-	-	-	-	-	-	-	-	-	-	-	-	-	-	-	-	-	-
S-24	6' - 8'	SP	24.1	2.0	-	-	-	-	-	-	-	-	-	-	-	-	-	-	-	-	-	-
S-25	2' - 4'	SP-SM	17.5	-	9.3	-	-	-	100	100	100	100	87.7	80.8	75.9	73.0	62.6	49.5	41.7	14.1	10.3	9.3
S-26	2' - 4'	SP-SM	18.3	-	10.8	-	-	-	100	-	100	100	90.0	81.7	75.3	70.0	58.9	45.5	37.8	17.8	12.7	10.8
S-26	8' - 10'	PT/SP-SM	141.4	11.1	-	-	-	-	-	-	-	-	-	-	-	-	-	-	-	-	-	-
S-27	0' - 2'	SP-SM	13.9	-	8.8	-	-	-	100	-	89.6	89.6	68.6	59.5	53.3	49.3	41.7	33.7	28.2	13.6	9.8	8.8
S-27	8' - 10'	PT	468.7	56.7	-	-	-	-	-	-	-	-	-	-	-	-	-	-	-	-	-	-
S-28	0' - 2'	PT/SP	19.9	5.8	3.1	-	-	-	-	-	-	-	-	-	-	-	-	-	-	-	-	-
S-28	2' - 4'	SM	16.9	-	12.7	-	-	-	100	100	100	100	93.8	92.9	91.8	90.7	80.5	63.3	50.3	17.3	13.6	12.7
S-29	2' - 4'	SP	50.6	4.2	-	-	-	-	-	-	-	-	-	-	-	-	-	-	-	-	-	-
S-29	6' - 8'	PT/SP-SM	73.8	7.0	-	-	-	-	-	-	-	-	-	-	-	-	-	-	-	-	-	-
S-30	2' - 4'	PT/SP	102.4	13.8	-	-	-	-	-	-	-	-	-	-	-	-	-	-	-	-	-	-
S-30	6' - 8'	SP	41.4	3.6	-	-	-	-	-	-	-	-	-	-	-	-	-	-	-	-	-	-

Table A: Laboratory Test Results Summary

Project Name: City of Fort Lauderdale - Stormwater Master Plan Modeling and Design Implementation

Project ID: 170901

						ATTERBERG LIMITS			GRAIN SIZE ANALYSIS U.S STANDARD SIEVE SIZE (% Passing)													
Boring No	**Sample Depth**	**Soil Classification**	**Moisture Content (%)**	**Organic Content (%)**	**-200**	**LL (%)**	**PL (%)**	**PI**	**3"**	**1.5"**	**1"**	**3/4"**	**3/8"**	**#4**	**#10**	**#20**	**#40**	**#50**	**#60**	**#100**	**#140**	**#200**
S-30	13.5' - 15'	PT/SP	58.7	7.7	-	-	-	-	-	-	-	-	-	-	-	-	-	-	-	-	-	-	-
S-31	6' - 8'	PT	181.2	28.7	11.9	-	-	-	-	-	-	-	-	-	-	-	-	-	-	-	-	-	-
S-32	6' - 8'	PT	175.7	42.0	5.3	-	-	-	-	-	-	-	-	-	-	-	-	-	-	-	-	-	-
S-33	13.5' - 15'	SP	60.5	3.6	3.3	-	-	-	100	100	-	100	100	95.2	84.8	71.5	51.6	35.5	26.8	9.3	5.3	3.3
S-33	8' - 10'	PT	188.4	28.6	37.3	-	-	-	-	-	-	-	-	-	-	-	-	-	-	-	-	-	-

Notes:

Moisture Content tested in accordance ASTM-D2216,
Organic Content tests are performed with furnace temperature @450 Celsius and tested accordance ASTM-D2974,
Plasticity Index Properties tested with accordance to ASTM-D4318,. LL=Liquid Limit, PL=Plasticity Limit and PI=Plasticity Index and NP=Non-Pastic
Soil Classification tested with accordance to ASTM D 2487,
Grain Size Analysis was tested in general accordance with ASTM-D422

GRAIN SIZE DISTRIBUTION

CLIENT NAME Hazen and Sawyer, P.C.

PROJECT NAME City of Fort Lauderdale - Stormwater Master Modeling and Design Implementation

PROJECT NUMBER 170901

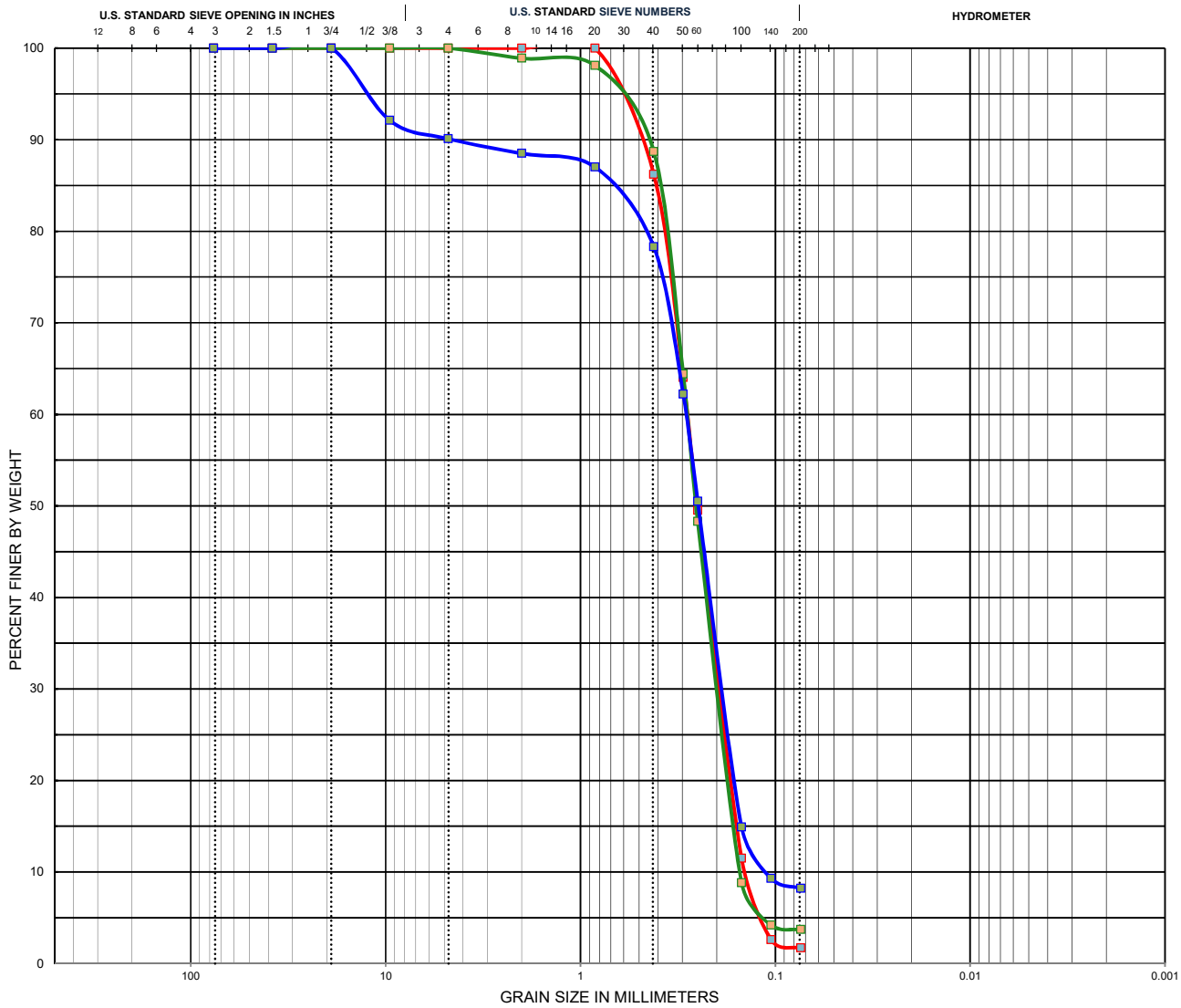

COBBLES	GRAVEL		SAND			SILT OR CLAY
	coarse	fine	coarse	medium	fine	

Boring No, Depth	Classification	LL	PL	PI	Cc	Cu
D-1 , 6-8	**Poorly-graded sand (SP)**	**NP**	**NP**	**NP**	**1.02**	**2**
D-2 , 6-8	**Poorly-graded sand (SP)**	**NP**	**NP**	**NP**	**0.95**	**1.87**
D-3 , 0-2	**Poorly-graded sand with silt (SP-SM)**	**NP**	**NP**	**NP**	**1.13**	**2.64**

Boring No, Depth	D100	D60	D30	D10	% Cobble	%Gravel	%Sand	%Silt	%Clay
D-1 , 6-8	**0.84**	**0.28**	**0.2**	**0.14**	**0**	**0**	**98.3**	**1.7**	
D-2 , 6-8	**4.76**	**0.28**	**0.2**	**0.15**	**0**	**0**	**96.3**	**3.7**	
D-3 , 0-2	**19**	**0.29**	**0.19**	**0.11**	**0**	**9.9**	**81.9**	**8.2**	

In accordance with ASTM E 329 this report shall not be reproduced, except in full without the prior written approval of RADISE International

GRAIN SIZE DISTRIBUTION

CLIENT NAME Hazen and Sawyer, P.C.

PROJECT NAME City of Fort Lauderdale - Stormwater Master Modeling and Design Implementation

PROJECT NUMBER 170901

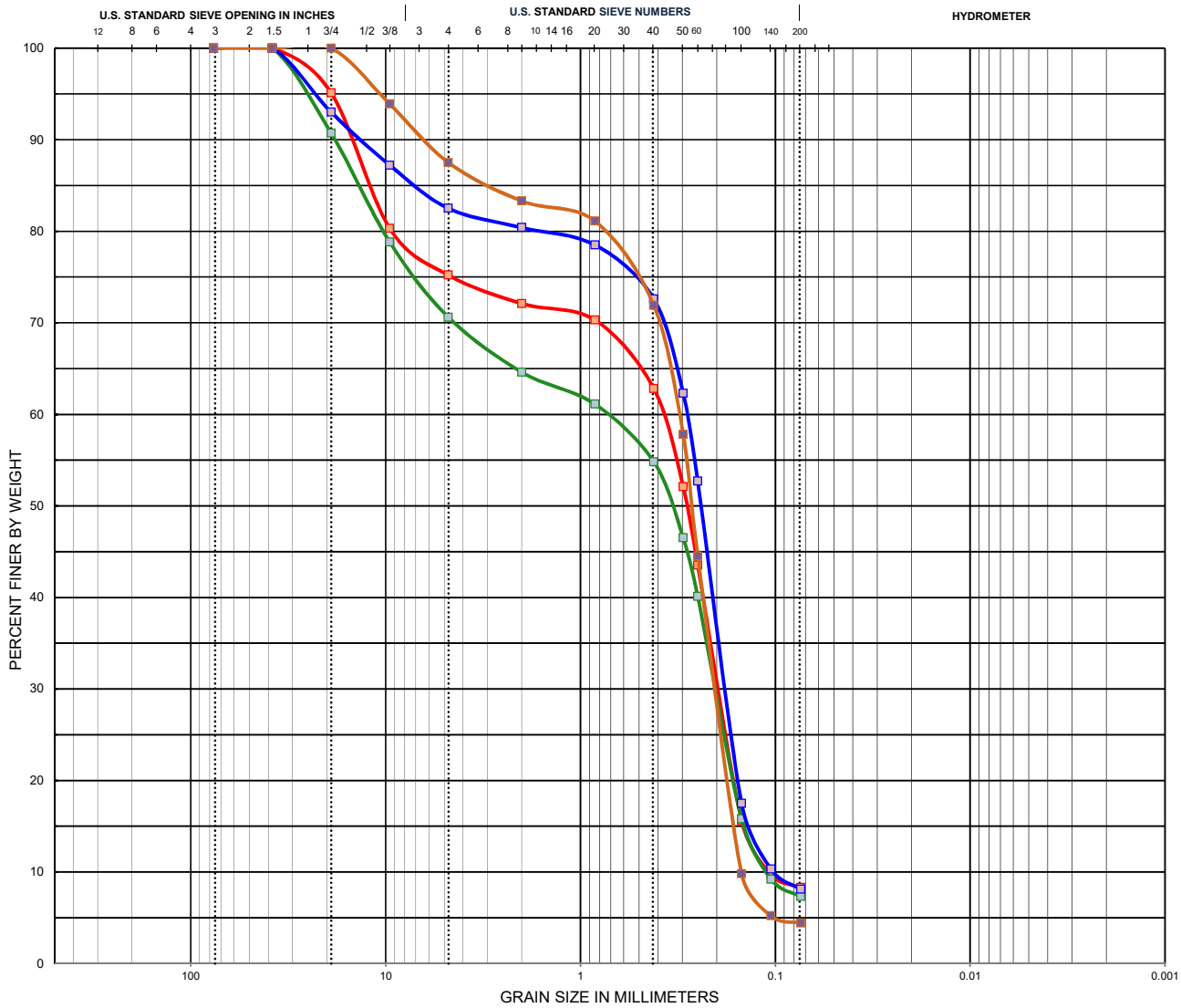

COBBLES	GRAVEL		SAND			SILT OR CLAY
	coarse	fine	coarse	medium	fine	

Boring No, Depth	Classification	LL	PL	PI	Cc	Cu
R-1 , 0 - 2'	**Poorly-graded sand with silt and gravel (SP-SM)**	**NP**	**NP**	**NP**	**0.93**	**3.55**
R-2 , 2' - 4'	**Poorly-graded sand with silt and gravel (SP-SM)**	**NP**	**NP**	**NP**	**0.52**	**7**
R-6 , 2' - 4'	**Poorly-graded sand with silt and gravel (SP-SM)**	**NP**	**NP**	**NP**	**1.12**	**2.9**
P-4 , 6' - 8'	**Poorly-graded sand (SP)**	**NP**	**NP**	**NP**	**0.92**	**2.13**

Boring No, Depth	D100	D60	D30	D10	% Cobble	%Gravel	%Sand	%Silt	%Clay
R-1 , 0 - 2'	**38.1**	**0.39**	**0.2**	**0.11**	**0**	**24.8**	**66.9**	**8.3**	
R-2 , 2' - 4'	**38.1**	**0.77**	**0.21**	**0.11**	**0**	**29.4**	**63.3**	**7.3**	
R-6 , 2' - 4'	**38.1**	**0.29**	**0.18**	**0.1**	**0**	**17.5**	**74.4**	**8.1**	
P-4 , 6' - 8'	**19**	**0.32**	**0.21**	**0.15**	**0**	**12.5**	**83.1**	**4.4**	

In accordance with ASTM E 329 this report shall not be reproduced, except in full without the prior written approval of RADISE International

GRAIN SIZE DISTRIBUTION

CLIENT NAME Hazen and Sawyer, P.C.

PROJECT NAME City of Fort Lauderdale - Stormwater Master Modeling and Design Implementation

PROJECT NUMBER 170901

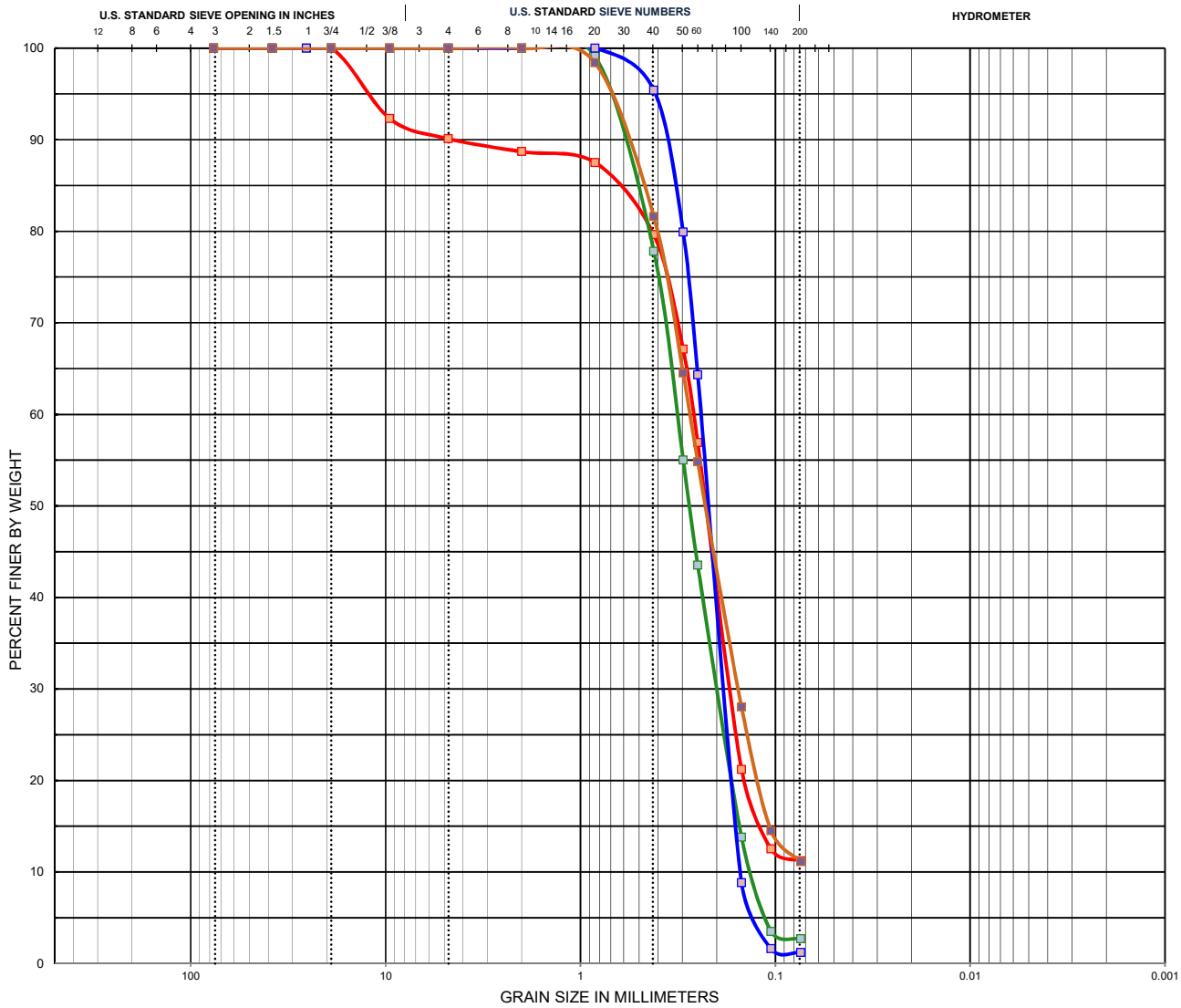

COBBLES	GRAVEL		SAND			SILT OR CLAY
	coarse	fine	coarse	medium	fine	

Boring No, Depth	Classification	LL	PL	PI	Cc	Cu
V-9 , 2-4	**Poorly-graded sand with silt (SP-SM)**	**NP**	**NP**	**NP**	**0**	**0**
R-10 , 28.5-30	**Poorly-graded sand (SP)**	**NP**	**NP**	**NP**	**0.96**	**2.46**
R-9 , 13.5-15	**Poorly-graded sand (SP)**	**NP**	**NP**	**NP**	**1**	**1.6**
R-12 , 38.5' - 40'	**Poorly-graded sand with silt (SP-SM)**	**NP**	**NP**	**NP**	**0**	**0**

Boring No, Depth	D100	D60	D30	D10	% Cobble	%Gravel	%Sand	%Silt	%Clay
V-9 , 2-4	**19**	**0.26**	**0.17**	**0**	**0**	**9.9**	**78.9**	**11.2**	
R-10 , 28.5-30	**2**	**0.32**	**0.2**	**0.13**	**0**	**0**	**97.3**	**2.7**	
R-9 , 13.5-15	**0.84**	**0.24**	**0.19**	**0.15**	**0**	**0**	**98.8**	**1.2**	
R-12 , 38.5' - 40'	**2**	**0.28**	**0.16**	**0**	**0**	**0**	**88.9**	**11.1**	

In accordance with ASTM E 329 this report shall not be reproduced, except in full without the prior written approval of RADISE International

GRAIN SIZE DISTRIBUTION

CLIENT NAME Hazen and Sawyer, P.C.

PROJECT NAME City of Fort Lauderdale - Stormwater Master Modeling and Design Implementation

PROJECT NUMBER 170901

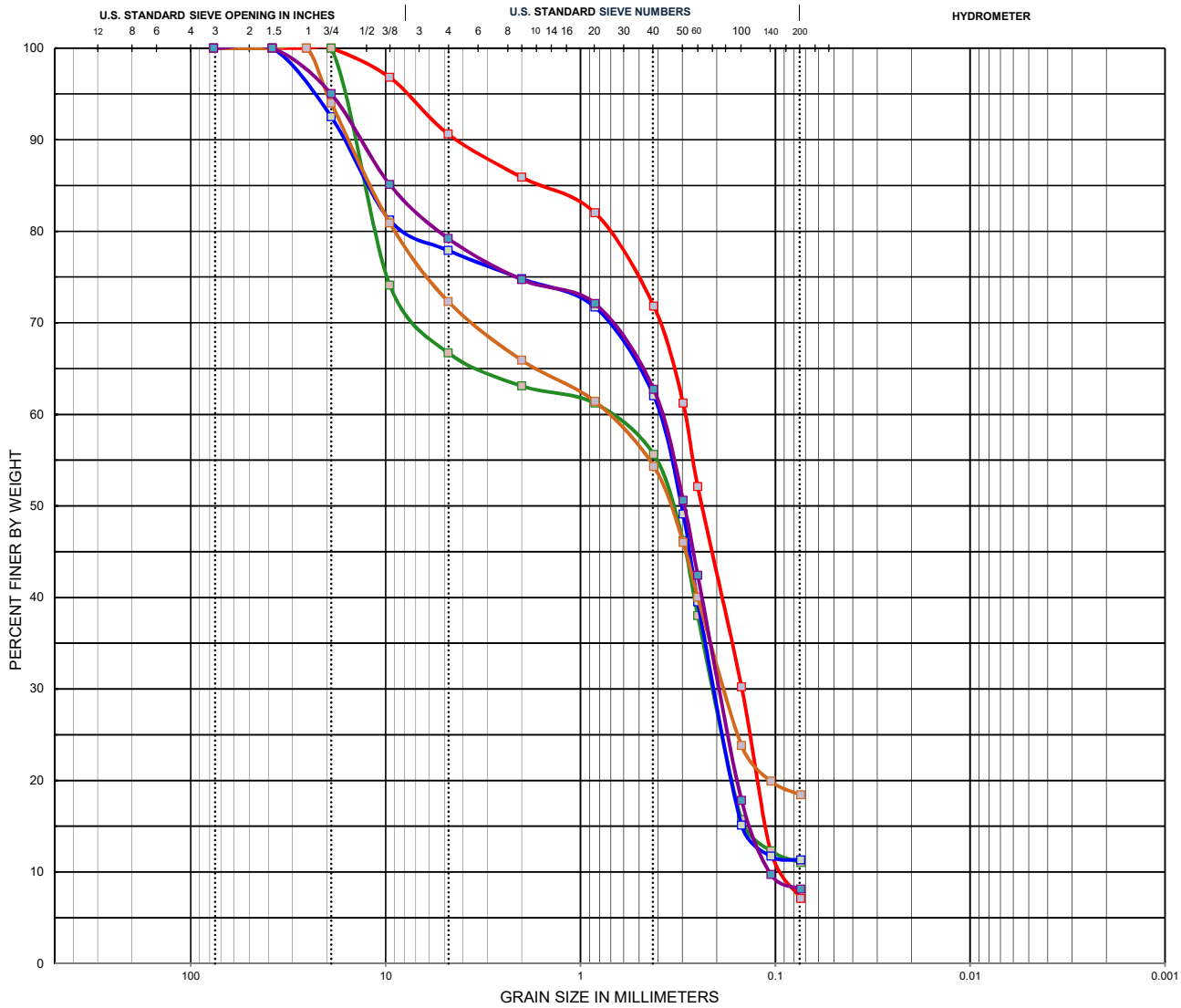

COBBLES	GRAVEL		SAND			SILT OR CLAY
	coarse	fine	coarse	medium	fine	

Boring No, Depth	Classification	LL	PL	PI	Cc	Cu
S-9 , 0-2	**Poorly-graded sand with silt (SP-SM)**	**NP**	**NP**	**NP**	**0.86**	**3.22**
S-13 , 4-6	**Poorly-graded sand with silt and gravel (SP-SM)**	**NP**	**NP**	**NP**	**0**	**0**
S-11 , 2-4	**Poorly-graded sand with silt and gravel (SP-SM)**	**NP**	**NP**	**NP**	**0**	**0**
S-12 , 0-2	**Silty sand with gravel (SM)**	**NP**	**NP**	**NP**	**0**	**0**
S-16 , 0-2	**Poorly-graded sand with silt and gravel (SP-SM)**	**NP**	**NP**	**NP**	**0.93**	**3.55**

Boring No, Depth	D100	D60	D30	D10	% Cobble	%Gravel	%Sand	%Silt	%Clay
S-9 , 0-2	**19**	**0.29**	**0.15**	**0.09**	**0**	**9.4**	**83.5**	**7.1**	
S-13 , 4-6	**19**	**0.75**	**0.21**	**0**	**0**	**33.3**	**55.7**	**11**	
S-11 , 2-4	**38.1**	**0.4**	**0.21**	**0**	**0**	**22.1**	**66.6**	**11.3**	
S-12 , 0-2	**25.4**	**0.76**	**0.19**	**0**	**0**	**27.7**	**53.9**	**18.4**	
S-16 , 0-2	**38.1**	**0.39**	**0.2**	**0.11**	**0**	**20.8**	**71.1**	**8.1**	

In accordance with ASTM E 329 this report shall not be reproduced, except in full without the prior written approval of RADISE International

GRAIN SIZE DISTRIBUTION

CLIENT NAME Hazen and Sawyer, P.C.

PROJECT NAME City of Fort Lauderdale - Stormwater Master Modeling and Design Implementation

PROJECT NUMBER 170901

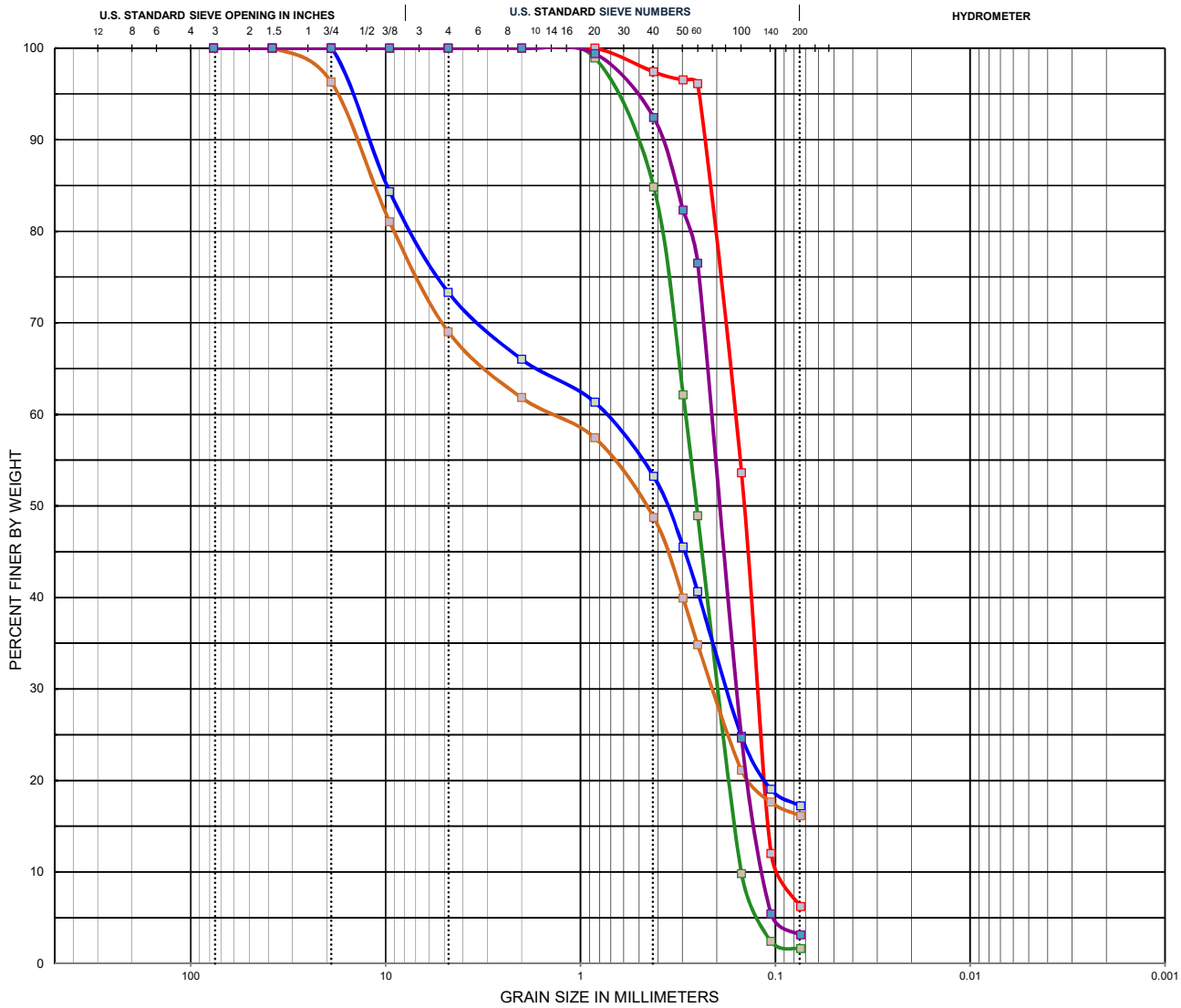

COBBLES	GRAVEL		SAND			SILT OR CLAY
	coarse	fine	coarse	medium	fine	

Boring No, Depth	Classification	LL	PL	PI	Cc	Cu
S-20 , 28.5-30	**Poorly-graded sand with silt (SP-SM)**	**NP**	**NP**	**NP**	**1**	**1.78**
S-21 , 8-10	**Poorly-graded sand (SP)**	**NP**	**NP**	**NP**	**0.92**	**1.93**
S-22 , 2-4	**Silty sand with gravel (SM)**	**NP**	**NP**	**NP**	**0**	**0**
S-19 , 0-2	**Silty sand with gravel (SM)**	**NP**	**NP**	**NP**	**0**	**0**
S-17 , 23.5-25	**Poorly-graded sand (SP)**	**NP**	**NP**	**NP**	**0.97**	**1.83**

Boring No, Depth	D100	D60	D30	D10	% Cobble	%Gravel	%Sand	%Silt	%Clay
S-20 , 28.5-30	**0.84**	**0.16**	**0.12**	**0.09**	**0**	**0**	**93.8**	**6.2**	
S-21 , 8-10	**2**	**0.29**	**0.2**	**0.15**	**0**	**0**	**98.4**	**1.6**	
S-22 , 2-4	**19**	**0.77**	**0.18**	**0**	**0**	**26.7**	**56.1**	**17.2**	
S-19 , 0-2	**38.1**	**1.53**	**0.21**	**0**	**0**	**31**	**52.9**	**16.1**	
S-17 , 23.5-25	**2**	**0.22**	**0.16**	**0.12**	**0**	**0**	**96.9**	**3.1**	

In accordance with ASTM E 329 this report shall not be reproduced, except in full without the prior written approval of RADISE International

GRAIN SIZE DISTRIBUTION

CLIENT NAME Hazen and Sawyer, P.C.

PROJECT NAME City of Fort Lauderdale - Stormwater Master Modeling and Design Implementation

PROJECT NUMBER 170901

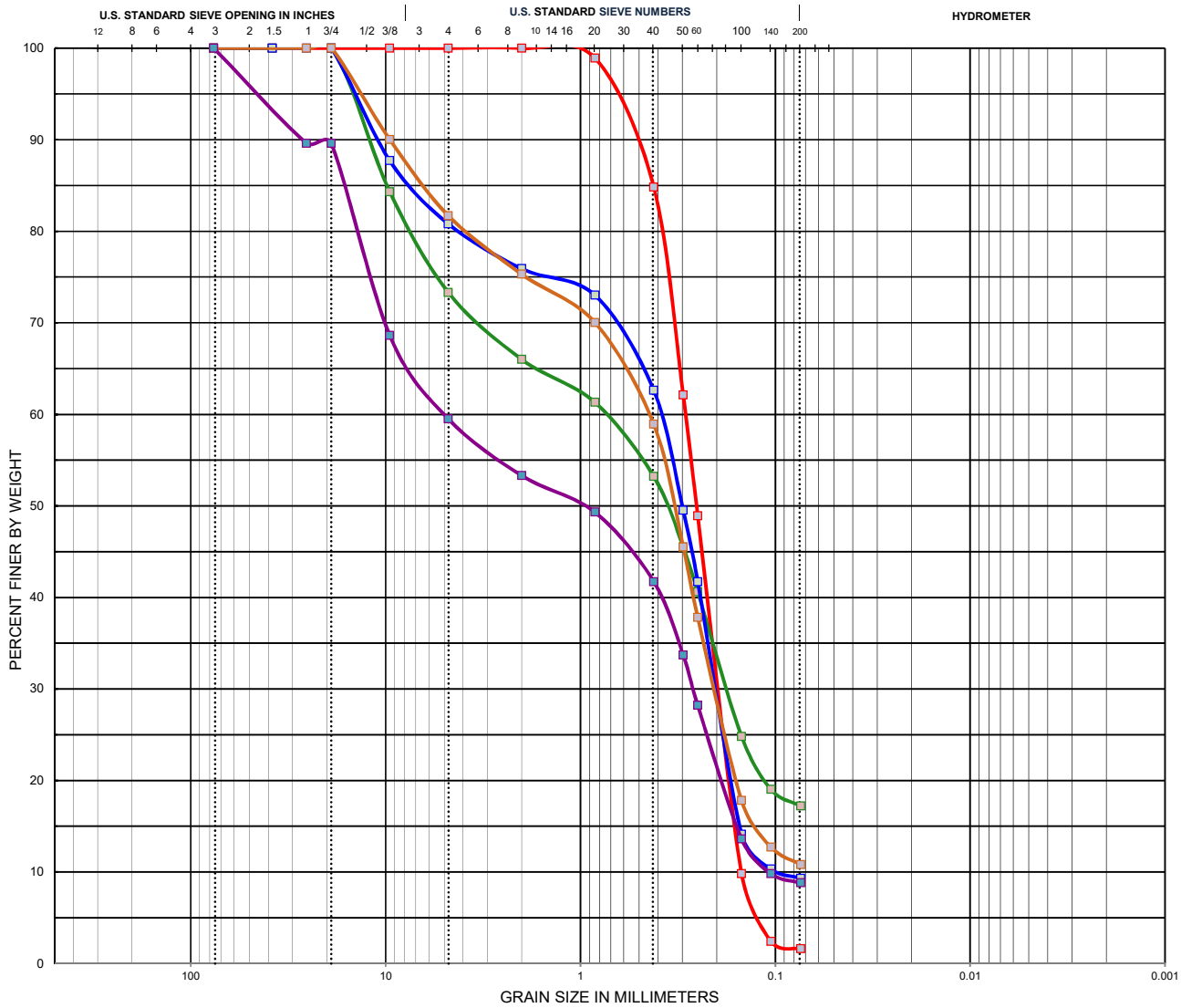

COBBLES	GRAVEL		SAND			SILT OR CLAY
	coarse	fine	coarse	medium	fine	

Boring No, Depth	Classification	LL	PL	PI	Cc	Cu
S-21 , 8-10	**Poorly-graded sand (SP)**	**NP**	**NP**	**NP**	**0.92**	**1.93**
S-22 , 2-4	**Silty sand with gravel (SM)**	**NP**	**NP**	**NP**	**0**	**0**
S-25 , 2-4	**Poorly-graded sand with silt and gravel (SP-SM)**	**NP**	**NP**	**NP**	**1.1**	**4**
S-26 , 2-4	**Poorly-graded sand with silt and gravel (SP-SM)**	**NP**	**NP**	**NP**	**0**	**0**
S-27 , 0-2	**Poorly-graded sand with silt and gravel (SP-SM)**	**NP**	**NP**	**NP**	**0.13**	**45.64**

Boring No, Depth	D100	D60	D30	D10	% Cobble	%Gravel	%Sand	%Silt	%Clay
S-21 , 8-10	**2**	**0.29**	**0.2**	**0.15**	**0**	**0**	**98.4**	**1.6**	
S-22 , 2-4	**19**	**0.77**	**0.18**	**0**	**0**	**26.7**	**56.1**	**17.2**	
S-25 , 2-4	**19**	**0.4**	**0.21**	**0.1**	**0**	**19.2**	**71.5**	**9.3**	
S-26 , 2-4	**19**	**0.46**	**0.21**	**0**	**0**	**18.3**	**70.9**	**10.8**	
S-27 , 0-2	**76.2**	**5.02**	**0.27**	**0.11**	**0**	**40.5**	**50.7**	**8.8**	

In accordance with ASTM E 329 this report shall not be reproduced, except in full without the prior written approval of RADISE International

GRAIN SIZE DISTRIBUTION

CLIENT NAME Hazen and Sawyer, P.C.

PROJECT NAME City of Fort Lauderdale - Stormwater Master Modeling and Design Implementation

PROJECT NUMBER 170901

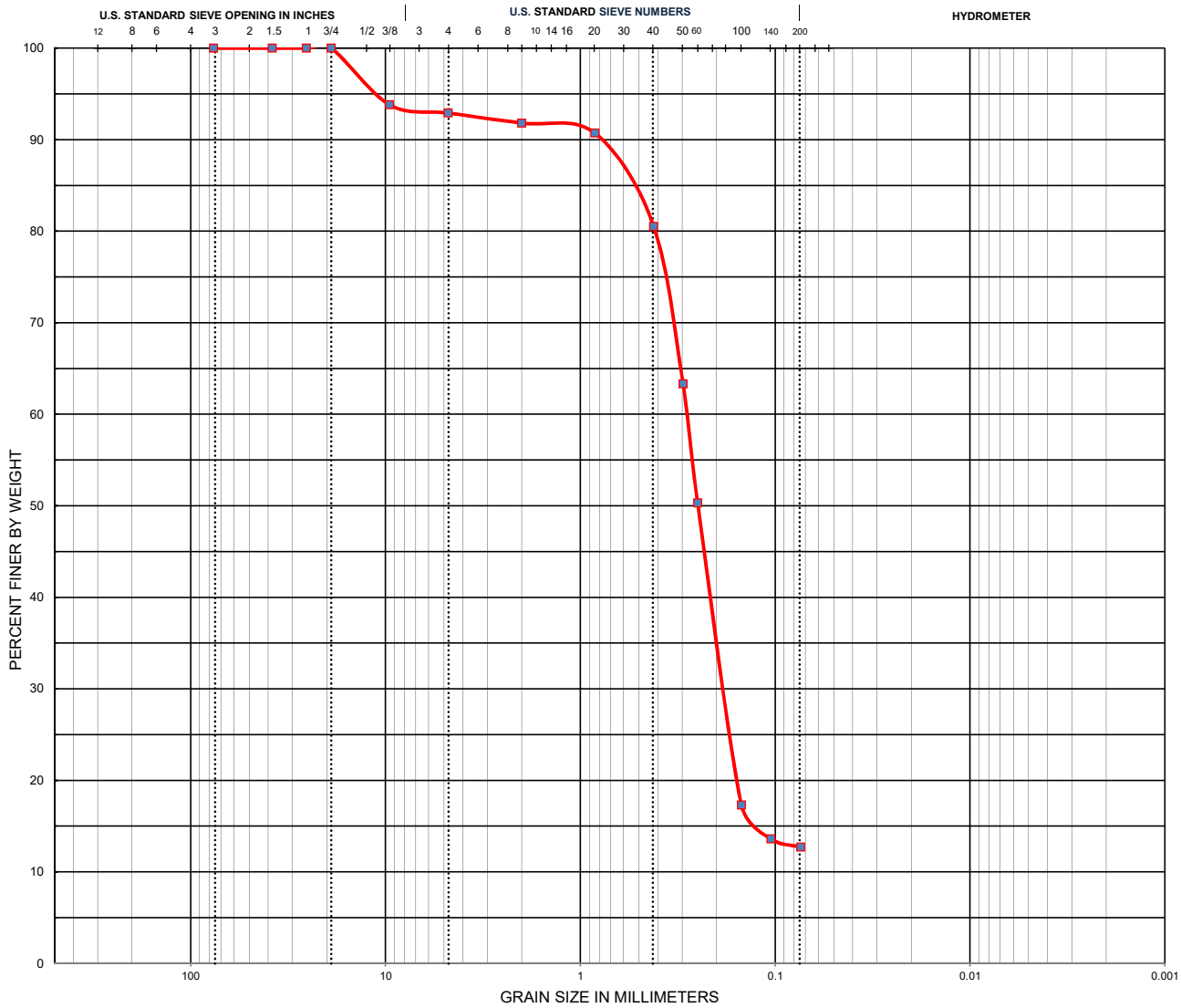

COBBLES	GRAVEL		SAND			SILT OR CLAY
	coarse	fine	coarse	medium	fine	

Boring No, Depth	Classification	LL	PL	PI	Cc	Cu
S-28 , 2-4	**Silty sand (SM)**	**NP**	**NP**	**NP**	**0**	**0**

Boring No, Depth	D100	D60	D30	D10	% Cobble	%Gravel	%Sand	%Silt	%Clay
S-28 , 2-4	**19**	**0.29**	**0.19**	**0**	**0**	**7.1**	**80.2**	**12.7**	

In accordance with ASTM E 329 this report shall not be reproduced, except in full without the prior written approval of RADISE International

GRAIN SIZE DISTRIBUTION

CLIENT NAME Hazen and Sawyer, P.C.

PROJECT NAME City of Fort Lauderdale - Stormwater Master modeling and Design Implentation

PROJECT NUMBER 170901

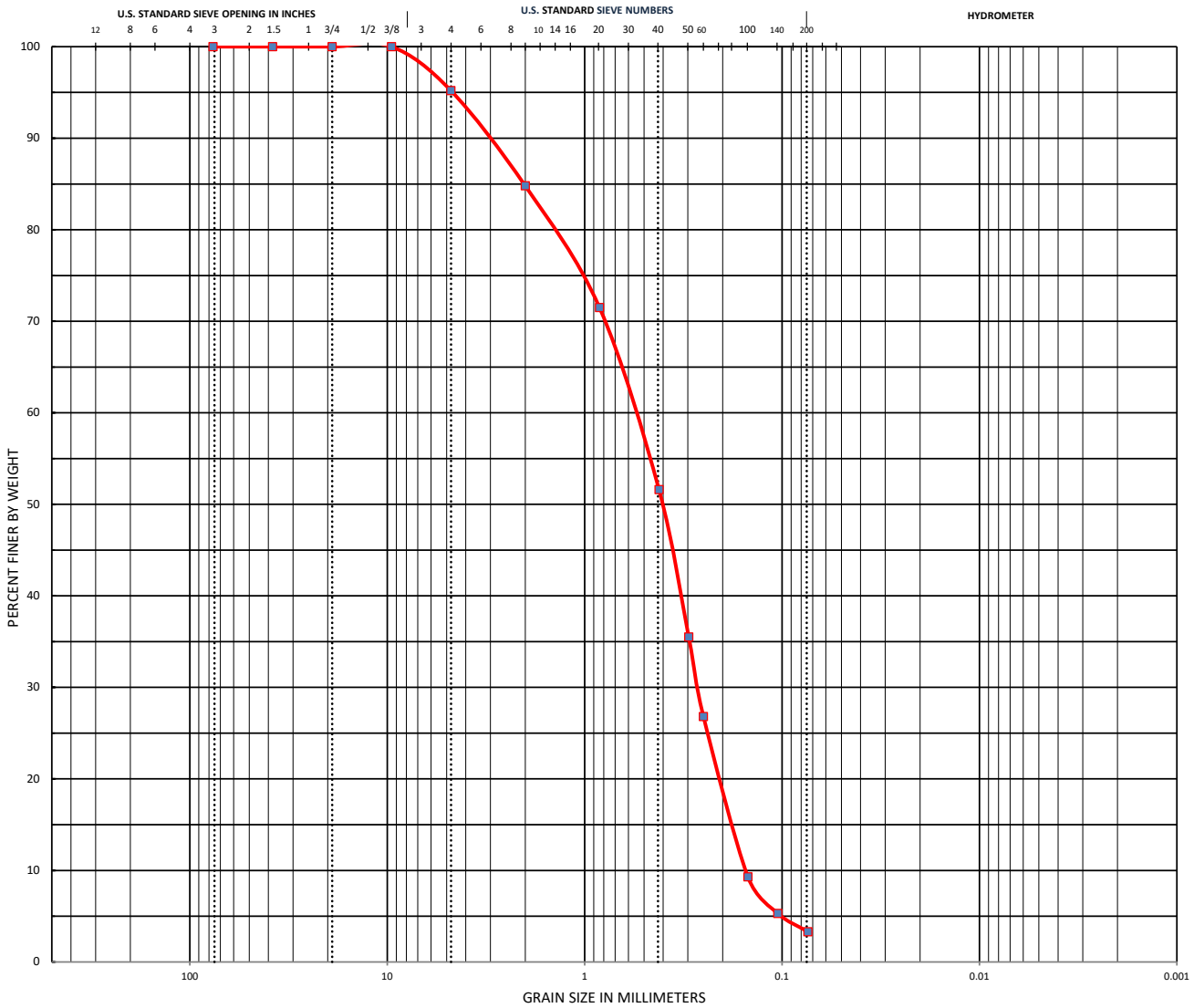

COBBLES	GRAVEL		SAND			SILT OR CLAY
	coarse	fine	coarse	medium	fine	

Boring No, Depth	Classification	LL	PL	PI	Cc	Cu
S-33, 13.5' - 15'	**Poorly-graded sand (SP)**	**NP**	**NP**	**NP**	**0.81**	**4**

Boring No, Depth	D100	D60	D30	D10	% Cobble	%Gravel	%Sand	%Silt	%Clay
S-33, 13.5' - 15'	**9.51**	**0.6**	**0.27**	**0.15**	**0**	**4.8**	**91.9**	**3.3**	

APPENDIX B

PRELIMINARY DESIGN GEOTECHNICAL SERVICES REPORT

January 31, 2017

Hazen and Sawyer
4000 Hollywood Blvd., Suite 750N
Hollywood, Florida 33201

Attn: Mr. Robert B. Taylor, Jr., P.E.
Office: (954) 987- 0066
Cell: (772) 595- 2535
Email: rbtaylor@hazenandsawyer.com

RE: Geotechnical Services Report
City of Fort Lauderdale - 7 Neighborhoods Improvement Projects
Broward County, Florida
RADISE Project No: 160605

Dear Mr. Taylor,

RADISE International, LC (RADISE) is pleased to submit this *Geotechnical Services Report* for the above-referenced project. The purpose of this report is to provide geotechnical information and recommendations to aid in the design and construction of this project. This report describes the field exploration and laboratory testing performed, presents the data obtained, and provides our recommendation regarding geotechnical aspect of the of the proposed project.

The study was performed in general accordance with our agreement executed on October 11, 2016, our scope of work for geotechnical services, and the Florida Department of Transportation (FDOT) Soils and Foundations Handbook.

We appreciate the opportunity to work with Hazen and Sawyer on this project, and trust that the information presented is clear. Should you have any questions with this report, or if we can be of additional assistance as this project develops, please contact us at (561) 841-0103.

Sincerely,

RADISE International
Infrastructure Engineers & Software Developers

Khaled Abdelli
Staff Engineer

Akash Bissoon, P.E.
Project Engineer
Florida Registration
No. 74582

Thomas F. Mullin
LICENSE
No. 43366
STATE OF FLORIDA
PROFESSIONAL ENGINEER

Thomas F. Mullin, P.E.
Chief Engineer &
Geotechnical Group Manager
Florida Registration
No. 34466

5/10/17

4152 West Blue Heron Blvd, Suite 1114, Riviera Beach, FL 33404 Phone: 561.841.0103 / Fax: 561.841.0104 www.radise.net
Offices in Miami-Dade, Broward, Palm Beach and Orange Counties

TABLE OF CONTENTS

1.0 INTRODUCTION 1

2.0 PROJECT DESCRIPTION 1

3.0 PURPOSE AND SCOPE OF WORK 1

4.0 FIELD EXPLORATION 2

4.1 SOIL BORINGS 2
4.2 PERMEABILITY TEST 3
4.3 GROUNDWATER LEVEL MEASUREMENTS 3

5.0 LABORATORY TESTING 3

5.1 GENERAL 3
5.2 LABORATORY TEST RESULTS 3

6.0 SURFACE AND SUBSURFACE EXPLORATION 4

6.1 STRATIGRAPHY 4
6.2 EXFILTRATION TESTING 5
6.3 GROUNDWATER LEVELS 5

7.0 DISCUSSIONS AND RECOMMENDATIONS 5

7.1 CLEARING AND GRUBBING 6
7.2 UNDERGROUND UTILITIES 6
7.3 EXCAVATIONS 6
7.4 DEWATERING 7
7.5 PIPE BEDDING 7
7.6 TRENCH BACKFILL AND COMPACTION 7
7.7 SITE PREPARATION 8
7.8 SELECT FILL COMPOSITION, PLACEMENT AND COMPACTION 8
7.9 PAVEMENT DESIGN CONSIDERATIONS 9
7.10 OBSERVATION AND TESTING 11

8.0 PROTECTION OF EXISTING STRUCTURES 11

9.0 LIMITATIONS 11

ATTACHMENTS

Sheet 1 – Vicinity Map
Sheets 2A through 2G – Test Location Plan
Sheet 3A through 3E – SPT Boring Subsurface Profiles
Table A-1 – Laboratory Test Results Summary
Grain Size Distribution
Table A-2 – Open-Hole Exfiltration Test Results

1.0 INTRODUCTION

RADISE understands that the City of Fort Lauderdale is performing a study for Stormwater master plan modeling and design implementation in the City of Fort Lauderdale. To aid in the evaluation and design of the project, RADISE was requested to provide subsoil investigation and evaluation services that included drilling of exploratory borings and exfiltration testing to determine the subsurface stratigraphy, groundwater levels and physical properties of the soils underlying the site.

The information presented in this report is based upon our interpretation of the subsurface information revealed by the test borings. The report does not reflect variations in subsurface conditions that may exist between or beyond these borings. Variations in soil and groundwater conditions should be expected, the nature and extent of which might not become evident until construction is undertaken. If variations are encountered, and/or the scope of the project altered, we should be consulted for additional recommendations.

2.0 PROJECT DESCRIPTION

The project is located in the City of Fort Lauderdale, Florida and includes seven (7) neighborhoods located east of the interstate (I-95) and between Port Everglades Expressway and Sunrise Boulevard. The approximate limits of the neighborhood projects are shown on the attached *Vicinity Map*, Sheet 1.

3.0 PURPOSE AND SCOPE OF WORK

The purpose of this study was to perform a limited exploration of the subsurface conditions within the project proposed areas, to aid in the planning and design of the overall neighborhood site drainage infrastructure.

More specifically, the purpose of the work included the following:

- Development of the anticipated soil profiles and the subsurface conditions within the depth of influence of the needed and anticipated improvements.
- Identification of critical geotechnical design or construction considerations based on the soil and groundwater conditions encountered in the borings.

RADISE performed the following services in accordance with the proposed scope of work:

1. Performed a site visit to field mark (paint or/and stake) the planned soil boring and percolation test locations and observe existing site conditions.

2. Contacted Sunshine One-Call to request the field location and clearance of underground utilities in the areas of the proposed borings, as per Florida Statutes.

3. Set up basic Maintenance of Traffic (MOT) safety controls prior to and during the field

drilling and testing operations.

4. Mobilized drilling equipment to the site to perform thirty-five (35) Standard Penetration Test (SPT) soil borings to depths of twelve (12) to fourteen (14) feet below the existing ground surface within the various seven (7) neighborhoods. Samples of the subsurface soils encountered were obtained and the depth to the groundwater level was measured in each of the borings. Following completion of the testing, the boreholes were backfilled with neat cement grout.

5. Performed twenty-eight (28) open-hole Exfiltration tests to a depth of fifteen (15) feet below the existing ground surface. Tests were performed along the edge of the streets in the green space adjacent to the SPT borings. Tests were performed in accordance with the South Florida Water Management District (SFWMD) test procedures. Following completion of the testing, the boreholes were backfilled with neat cement grout.

6. Visually classified the SPT soil samples retrieved from the soil borings in accordance with the Unified Soil Classification System (USCS) using the Visual-Manual Procedure in general accordance with the American Society of Testing and Materials (ASTM) test method D 2488, *Description and Identification of Soils*.

7. Performed a limited laboratory testing program for soil index property determinations on selected SPT samples to aid in the classification process in general accordance with the ASTM test method D 2487, *Classification of Soils for Engineering Purposes*.

8. Prepared this geotechnical report which includes, but not necessarily be limited to:

   - Detailed graphical logs of the soil borings showing the groundwater level and subsurface soil stratigraphy and classification.
   - Presentation of the results of the field permeability exfiltration tests.
   - Geotechnical design and construction recommendations for the proposed improvements.

4.0 FIELD EXPLORATION

During this work phase, MOT was used to protect our field personnel, crew, equipment, and the public. The MOT was designed and set up in accordance with the FDOT Design Standards.

4.1 SOIL BORINGS

The field exploration program to evaluate the existing subsurface conditions consisted of drilling thirty-five (35) SPT borings. The SPT borings were drilled to depths of twelve (12) to fourteen (14) feet below the existing ground surface. The approximate locations of the SPT borings are depicted on the attached *Test Location Plan*, Sheets 2A through 2G. Latitude and Longitude coordinates of the test locations were obtained by the field crew using hand-held GPS equipment and are listed on the attached *Subsurface Profiles*, Sheets 3A through 3E. The SPT borings were

performed in general accordance with ASTM D 1586, "*Standard Test Method for the Standard Penetration Test and Split-Barrel Sampling*". Upon retrieval, the split-spoon soil samples were visually classified and placed in moisture proof containers for transportation to our laboratory. Each borehole was backfilled with neat cement grout to the ground surface after the completion of drilling operations.

4.2 PERMEABILITY TEST

To evaluate the hydraulic conductivity of the subsurface soils, twenty-eight (28) Exfiltration Tests were performed along the edge of the streets in the green space adjacent to most of the SPT borings. Exfiltration tests were performed in general accordance with the South Florida Water Management District (SFWMD) procedures in 6-inch diameter by fifteen (15) feet deep auger boreholes. The approximate location of the tests are shown on the attached *Test Location Plan*, Sheets 2A through 2G.

4.3 GROUNDWATER LEVEL MEASUREMENTS

After completion of the borings and after a short stabilization period, the depth to the groundwater was measured from the existing ground surface in each boring. The measured groundwater depth/elevation is plotted adjacent to the soil profiles shown on the attached *Subsurface Profiles*, Sheets 3A through 3E.

5.0 LABORATORY TESTING

5.1 GENERAL

Representative soils samples collected from the borings were visually reviewed in the laboratory by a RADISE Geotechnical Engineer to confirm field classifications. The samples were classified in general accordance with the Unified Soil Classification System (USCS). The classifications were based on visual observations supplemented by laboratory test results performed on selected representative SPT samples. Laboratory index tests consisting of Full Sieve Analysis, Percent Passing No. 200 Sieve, Moisture and Organics Content tests were performed on selected samples.

5.2 LABORATORY TEST RESULTS

The following list summarizes the types and numbers of laboratory tests performed.

- Fifty (50), Moisture Content Tests (ASTM D 2216).
- Nineteen (19), Organics Content Tests (ASTM 2216 D).
- Eighteen (18), Full Sieve Analysis Test (ASTM D422).
- Fourteen (14), Percent Passing No. 200 Sieve Tests (ASTM D 1140).

Test assignments were provided by a geotechnical engineer during the laboratory review of secured soil samples. Laboratory assignments were made to supplement and confirm soil

classification at each general boring location.

All of the laboratory test results are presented on the attached *Subsurface Profiles*, Sheet 3A through 3E, and in the attached Table A-1 - *Laboratory Test Results Summary*.

6.0 SURFACE AND SUBSURFACE EXPLORATION

6.1 STRATIGRAPHY

Stratification of the explored soils is based on visual examination of the recovered soil samples, laboratory classification and index testing, and interpretation of the field boring logs by a geotechnical engineer in accordance with the Unified Soil Classification System (USCS). Subsurface profiles showing the soil stratification at the boring locations were developed and are presented on the attached *Subsurface Profiles*, Sheets 3A through 3E. Stratification lines represent approximate boundaries between soil types, but the actual transition between layers may be gradual or abrupt. Additionally, soil and groundwater conditions will vary between boring locations.

The soils encountered in all thirty-five (35) of the soil borings generally consist of sand with varying amounts of silt and limestone fragments occasionally underlain by limestone. Some of the borings encountered a layer of soil containing appreciable amounts of organic matter. Generalized descriptions of the soil stratigraphy are provided in the following Table 1:

TABLE 1 - STRATIGRAPHY

Stratum No.	Description	USCS Class.
1	Gray, tan, brown to dark brown, fine to medium SAND, trace Organics, trace Limestone, trace Silt	SP
2	Gray, tan, brown to dark brown, fine to medium SAND, trace to few Shell fragments	SP
3	Gray, tan, brown to dark brown Silty SAND, with Limestone Fragments	SM
4	Gray, tan, brown to dark brown SAND, with Silt, trace Limestone fragments	SP, SP-SM
5	Tan LIMESTONE	-
6	Dark Brown PEAT	PT

It is noted that the Layer 6 Dark Brown Peats were primarily encountered in the borings performed in the Seven Isles area of the project. Review of the boring logs indicates there appear to be layers of fill soils which were placed over remnant buried mangrove preserve areas along the Intracoastal

waterway. This land reclamation occurred during early development periods in the history of the coastal Ft. Lauderdale area.

The following Table 2 summarizes the borings, depths and thickness of the Stratum 6 soils that contain 14.7 to 62.5 percent organics encountered:

TABLE 2 – STRATUM 6 SOILS (PEAT)

Boring No.	Depth from (feet)	Depth to (feet)	Organic layer thickness (feet)
B-32	8	10	2
B-33	6	8	2
B-34	4	8	4
B-35	6	8	2

6.2 EXFILTRATION TESTING

The Exfiltration permeability tests were completed in an 8-inch diameter by 15-foot deep auger borehole in general accordance with the SFWMD procedures. The borehole sidewall was stabilized with a 6-inch diameter perforated section of No. 10 slot screen. The annulus space was backfilled with clean 6/20 silica sand. The results of the permeability tests are presented on Table A-2 - *Open-hole Exfiltration Test Results* included in the Attachments.

6.3 GROUNDWATER LEVELS

Groundwater was encountered in each of the auger borings and exfiltration test boreholes. The groundwater level varied between 3.5 to 7 feet below the existing ground surface. However, the groundwater levels will fluctuate with the seasons and variations of precipitation. It is our recommendation that the seasonal high groundwater table levels along the various project infrastructure alignments, be based on the normal high tide water levels of the adjacent waterways existing near the various neighborhood project areas and with additional geotechnical explorations. In inland areas not directly influenced by the water levels in the adjacent waterways and canals, normal high groundwater levels can be expected to be on the order of 2 to 3 feet above currently measured and reported levels herein.

7.0 DISCUSSIONS AND RECOMMENDATIONS

Generally speaking, the soils encountered in the majority of the borings performed for this study will be suitable for the proposed construction. However, it was previously noted that the Seven Isles area is likely a historical land reclamation area. This area as well as several others in the surrounding region, were infilled sometime in the historical past to facilitate the construction of the present residential communities. While no organics were encountered in the limited number of borings performed for the Victoria Park area, it is noted that the eastern area of this development

borders what appears to be the old Intracoastal Waterway footprint. Hence it might be expected that some buried organics may exist in the eastern areas/edges of this development.

The presence of the buried organics will be problematic to the installation of underground utilities especially when the inverts of such systems are founded in the organic layers. Such organics have very low shear strengths and will not support significant excavations made within or through them. As such, it is anticipated that significant shoring/sheet piling will be required to install infrastructure systems in this area.

7.1 CLEARING AND GRUBBING

Clearing and grubbing may be required in some of the proposed construction areas. Clearing and grubbing should include the complete removal and disposal of surficial grasses, associated root systems, topsoil, rubbish, debris, any demolition material/pavement and all other obstructions resting on or protruding through the surface of the existing ground and the surface of excavated areas.

7.2 UNDERGROUND UTILITIES

Existing underground utilities and structures are likely to be present in the proposed construction areas. These utilities need to be properly identified, and located and/or relocated as necessary to construct the new components of the project. The excavation bottoms of any relocated or replacement utilities should be cleaned of any undesirable materials prior to placing any engineered backfill.

Site preparation, excavation, and backfilling for new utilities or re-aligned utilities should follow all of the applicable recommendations of this report.

7.3 EXCAVATIONS

The project construction Contractor is solely responsible for making any utility or other excavations in a safe manner and to provide appropriate measures to retain side slopes to ensure that persons working in or near the excavation are protected.

Excavations shall comply with Occupational Health and Safety Administration (OHSA) stipulations for Trench Excavation Safety including all temporary design and safety requirements. The soils encountered in the majority borings outside of the Seven Isles area, generally consist of relatively clean sands. OSHA 29 CFR part 1926 (Subpart P, Excavations) defines such soils as Type C soils. As such, the granular deposits encountered in the borings are readily capable of being excavated to a depth of several feet with standard backhoe construction equipment. As such, temporary side slopes in fully dewatered excavations could be made at a 1½H:1V inclination or flatter. Adjustment to this inclination and/or the use of sheeting, shoring or sliding trench boxes should be evaluated by the Contractor if other soil strata are encountered. Any structural retaining walls shall be designed and sealed by a structural engineer registered in the State of Florida.

It is noted that in the Seven Isles area, that significant Muck deposits were encountered in the borings. Utilities installed in this area are likely to encounter organic Muck deposits during the utility excavation and installation process.

7.4 DEWATERING

At the time of the field exploration (October, 2016), the groundwater encountered varied between 3.5 to 7 feet below the existing ground surface. In-the-dry construction of the underground utilities may require groundwater lowering and control of groundwater seepage depending on the design installation depths. Dewatering of the excavations may necessitate the use of sumps, wells, wellpoints or combinations thereof. Control of groundwater should be accomplished in a manner that preserves the integrity of the in-situ soils and limestones and does not cause instability of the excavation sidewalls. The dewatering system employed should be capable of maintaining a pre-drained surface a minimum of 24 inches below the excavation bottoms.

7.5 PIPE BEDDING

Most of the sands encountered in the borings are expected to provide good support for utility pipelines without the need for bedding when the invert elevations are at least 24 inches above the groundwater level (natural or pre-drained by dewatering). Should or where organics or other deleterious materials be encountered at or within 2 feet below the pipe invert, such soils shall be considered compressible and unsuitable for pipe support. These soils should be over-excavated and replaced with compacted clean sand or FDOT No. 57 coarse aggregate or an approved equivalent. If FDOT No. 57 stone or an approved equivalent is utilized, such stone material will need to be encapsulated and/or covered with a geosynthetic fabric especially beneath pavement areas. Such fabric material is needed to prevent granular excavation soils and trench backfill from penetrating/settling into the void volumes of the open stone resulting in loss of ground and eventual settlement of the ground surface above the piping.

The bedding surface should be uniformly compacted to a density of not less than 95 percent of the maximum dry density in accordance with ASTM D 1557, the Modified Proctor Method.

7.6 TRENCH BACKFILL AND COMPACTION

Soils used to backfill utility excavations should consist of clean sands having no materials larger than one inch in size, not more than ten (10) percent passing the U.S. Standard No. 200 sieve, and not more than three (3) percent organics or other deleterious materials by weight. Some of the subsurface soils encountered at these neighborhood sites appear to meet these criteria and are suitable for reuse as backfill once inspected, tested and approved.

Granular backfill should be placed at a moisture content within three (3) percent of its ASTM D 1557 determined optimum moisture and in level lifts whose thickness does not exceed eight (8) inches. Each fill lift should be stable, unyielding and uniformly compacted to at least 95 percent of the maximum dry density in accordance with ASTM D 1557, the Modified Proctor Method. We recommend the use of only relatively light, hand-held compaction equipment in the

densification operations around utilities to limit the potential damage to the pipelines and buried structures.

7.7 SITE PREPARATION

The site preparation for any roadway modifications should consist of necessary clearing and grubbing in general accordance with Section 110 of the FDOT Standard Specifications for Road and Bridge Construction or any similar City/County standard design criteria applicable to the project. Any topsoil or other deleterious material encountered in proposed pavement areas, will need to be stripped, removed and replaced with embankment or roadway fill. If buried organic soils, debris or other unsuitable materials are encountered during the construction, which are or are not disclosed by the borings, they should be removed and replaced with a backfill material as described in following sections.

The Strata 1, 2, and 4 soils are select granular soils and are satisfactory to use in the subgrade and embankment when utilized in general accordance with FDOT Standard Index 505 or any similar City/County standard design criteria applicable to the project. Soils exposed at the stripped grades will require moisture conditioning to near the optimum moisture content prior to initiating the densification operations. The densification should normally be accomplished using a self-propelled vibratory compactor which imparts a dynamic drum force of not less than 44,000 pounds however, in residential areas, the use of such heavy vibratory compaction equipment may prove problematic and disruptive or even damaging to existing/adjacent home owner's properties. In such cases, the compaction will need to be performed and achieved with lighter weight, less vibration generation capable equipment such as walk behind (e.g. Whacker) ground pounder or small vibratory rolling equipment.

Each section of the stripped grade should be subjected to multiple, overlapping (minimum of 10 percent overlap) coverages of the compactor as it operates at a travel speed of no more than 1.5 miles per hour (normal walking speed). Compaction should be continued until no further settlement can be visually discerned at the ground surface. The densified areas should include a 3-foot perimeter along proposed new pavement areas.

Density control should be exercised for the exposed subgrade for any roadway repairs. Soils in this interval should be compacted to not less than 95 percent of the maximum dry density in accordance with ASTM D 1557, the Modified Proctor Method. Subgrade soils that noticeably pump or deflect under the weight of the passing compaction equipment, could indicate the presence of soft, weak, overly saturated soils or compressible and loose soil zones existing in the near surface subgrade within the depth of influence of the roller. In such cases, those areas should be remedied by appropriate means to be determined by the inspecting field representative in consultation with representatives of the design team.

7.8 SELECT FILL COMPOSITION, PLACEMENT AND COMPACTION

Site structural and pavement embankment fill and backfill required for construction should consist of clean, granular materials that are free of debris, cinders, combustibles and organic matter. The fines content (i.e., material passing U.S. Standard No. 200 sieve) should not be more than ten (10)

percent by weight, no particle sizes larger than one (1) inches in any direction and the organic content should not exceed three (3) percent by dry weight. The on-site sand soils appear to meet the above criteria and are suitable for use as structural fill and backfill material. Organic laidened soils encountered in several of the borings soils beneath the upper sand layer such as those encountered in the Seven Isles area, will not be suitable for use of Select Fill.

The granular fill should be placed at a moisture content within three (3) percent of its Modified Proctor (ASTM D 1557) determined optimum in level lifts whose loose thickness does not exceed twelve (12) inches. In areas where heavy equipment cannot be operated for compaction, the fill should be placed in six (6) inch thick level lifts. Each fill lift should be stable, unyielding and uniformly compacted to 95 percent of the ASTM D 1557 maximum dry density, as verified by the designated site construction inspecting representative.

Select fill soils will require moisture conditioning to near the optimum moisture content prior to initiating the densification operations. Similar to the subgrade preparation, the fill densification should normally be accomplished using a self-propelled vibratory compactor which imparts a dynamic drum force of not less than 44,000 pounds. However, in residential areas, the use of such heavy vibratory compaction equipment may prove problematic and disruptive or even damaging to existing/adjacent home owner's properties. In such cases, the compaction will need to be performed and achieved with lighter weight, less vibration generation capable equipment such as walk behind (e.g. Whacker) ground pounder or small vibratory rolling equipment.

7.9 PAVEMENT DESIGN CONSIDERATIONS

The following information is intended as a guideline only, as the roadway or any repairs thereof, should be designed specifically for the vehicle load intensities and frequencies anticipated during the life of the project. Flexible pavement systems in this geographic area, typically consist of an asphaltic concrete wearing course, limerock base course and a stabilized pavement subgrade. Based on our preliminary analysis and experience in the area, the typical pavement section thicknesses shown in the following Table 3, are commonly used by local pavement design engineers.

TABLE 3 - TYPICAL FLEXIBLE AND RIGID PAVEMENT DESIGN

TYPE OF PAVEMENT	LAYER	MATERIAL DESCRIPTION	LAYER THICKNESS	
			LIGHT DUTY	HEAVY DUTY
Flexible	Asphaltic concrete	Florida DOT Asphalt Type S	1.5	2.0
	Base course	Crushed limerock with minimum LBR of 100, compacted to 98% of the Modified Proctor maximum dry density	6.0	8.0
	Stabilized subbase	Stabilized sub-base fill with a minimum LBR of 40 compacted to 95% of the Modified Proctor maximum dry density	12.0	12.0
Rigid	Concrete	Florida DOT Portland Cement Concrete	6.0	8.0
	Compacted subgrade	Natural in place soils compacted to at least 95 percent of the materials Modified Proctor maximum dry density	12.0	12.0

The base course material should consist of crushed limestone having a minimum Limerock Bearing Ratio (LBR) of 100. Base materials should meet the requirements presented in the latest revisions of the Florida Department of Transportation "Specifications for Road and Bridge Construction", Section 911 (limestone). The base course should be compacted to at least ninety-eight (98) percent of its maximum dry modified proctor density (AASHTO T 180).

We recommend that the pavement subgrade be stabilized to a depth of twelve (12) inches to achieve a minimum LBR of 40. This LBR can be achieved by blending base material (limerock) with the existing sandy subgrade soils. The required mixing ratio should be determined by laboratory testing. The stabilized subgrade should be compacted to at least ninety-eight (98) percent of its maximum dry as per ASTM D 1557, the Modified Proctor Method.

If it is not feasible to stabilize the subgrade, we recommend that the base course be thickened by an amount equivalent to the structural number of twelve (12) inches of stabilized subgrade.

A Portland concrete pavement thickness in the range of eight (8) inches is recommended for the project if a rigid pavement is to be employed (the thickness would depend on specific pavement use). The concrete should be reinforced to withstand the anticipated traffic loadings and jointed to reduce the chances for rigid pavement crack development. The minimum rigid pavement thickness recommended above is based upon concrete with an unconfined compressive strength of at least 3,000 psi and a modulus of rupture of at least 450 psi.

Actual pavement section thickness should be determined by the Design Civil Engineer based on traffic loads, volume, and the owner's design life requirements. The above sections represent minimum thickness representative of typical local construction practices and, as such, periodic

maintenance should be anticipated. All pavement materials and construction procedures should conform to FDOT, American Concrete Institute (ACI), or appropriate City and County requirements.

7.10 OBSERVATION AND TESTING

It is recommended that a geotechnical engineer be retained to provide soil engineering inspection services during the construction excavation phase of the project. This is to observe compliance with the design concept, specifications and recommendations, and to allow design changes in the event subsurface conditions differ from those anticipated. In addition, an inspection and testing representative of a geotechnical engineer should be present to provide monitoring and testing of both fill and concrete placement during the construction phase of the project.

8.0 PROTECTION OF EXISTING STRUCTURES

Ground vibrations induced upon adjacent structures, primarily by soil compaction equipment or any other construction activities such as pile driving, should be monitored to assure that they do not reach levels which prove damaging to any adjacent/nearby structures. Vibration Monitoring should be performed in general accordance with "Section 108, Protection of Existing Structures" of the current FDOT Standard Specifications for Road and Bridge Construction or other similar local City/County regulations or ordinances.

Vibration levels on adjacent facilities should generally be maintained below a 0.25 ips peak particle velocity level however, more restrictive/lessor levels may be specified for highly sensitive residential or commercial areas. The construction Contractor will need to inventory and provide a pre-construction inspection of adjacent structures and determine suitable vibration monitoring programs and impact limits for their construction activities. Such monitoring will be particularly important for the Seven Isles area as the ground conditions will have a higher tendency and capability to transmit vibrations horizontally from the construction activities. It is noted that the residential homes in this area are all likely founded on short driven piles installed to sound bearing conditions beneath the buried organics. Vibrations in the lower soil/rock layers beneath the organics, from construction activities such as sheet piling installation, will have the potential to be transmitted into the residences via the piling foundations installed for the structures.

9.0 LIMITATIONS

This report is intended for geotechnical purposes only, and not to document or detect the presence, or absence of any environmental conditions at the site, or to perform an environmental assessment of the site.

The analysis and recommendations presented in this report are based upon our interpretation of the subsurface information revealed by the test borings. The report does not reflect variations in subsurface conditions that may exist between or beyond these borings. Variations in soil and groundwater conditions should be expected, the nature and extent of which might not become

evident until construction is undertaken. If variations are encountered, and/or the scope of the project altered, we should be consulted for additional recommendations.

RADISE International warrants that the professional services performed and presented in this report are prepared for Hazen and Sawyer, and are based upon typical standard of care recognized principles and practices in the discipline of geotechnical engineering and hydrogeology at this place and point in time, for this project site. No other warranties are expressed or implied.

-oOo-

RADISE appreciates the opportunity to be of service to you. Please feel free to contact us at 561-841-0103 if you have any questions or comments regarding this report.

Respectfully submitted
RADISE INTERNATIONAL, L.C.

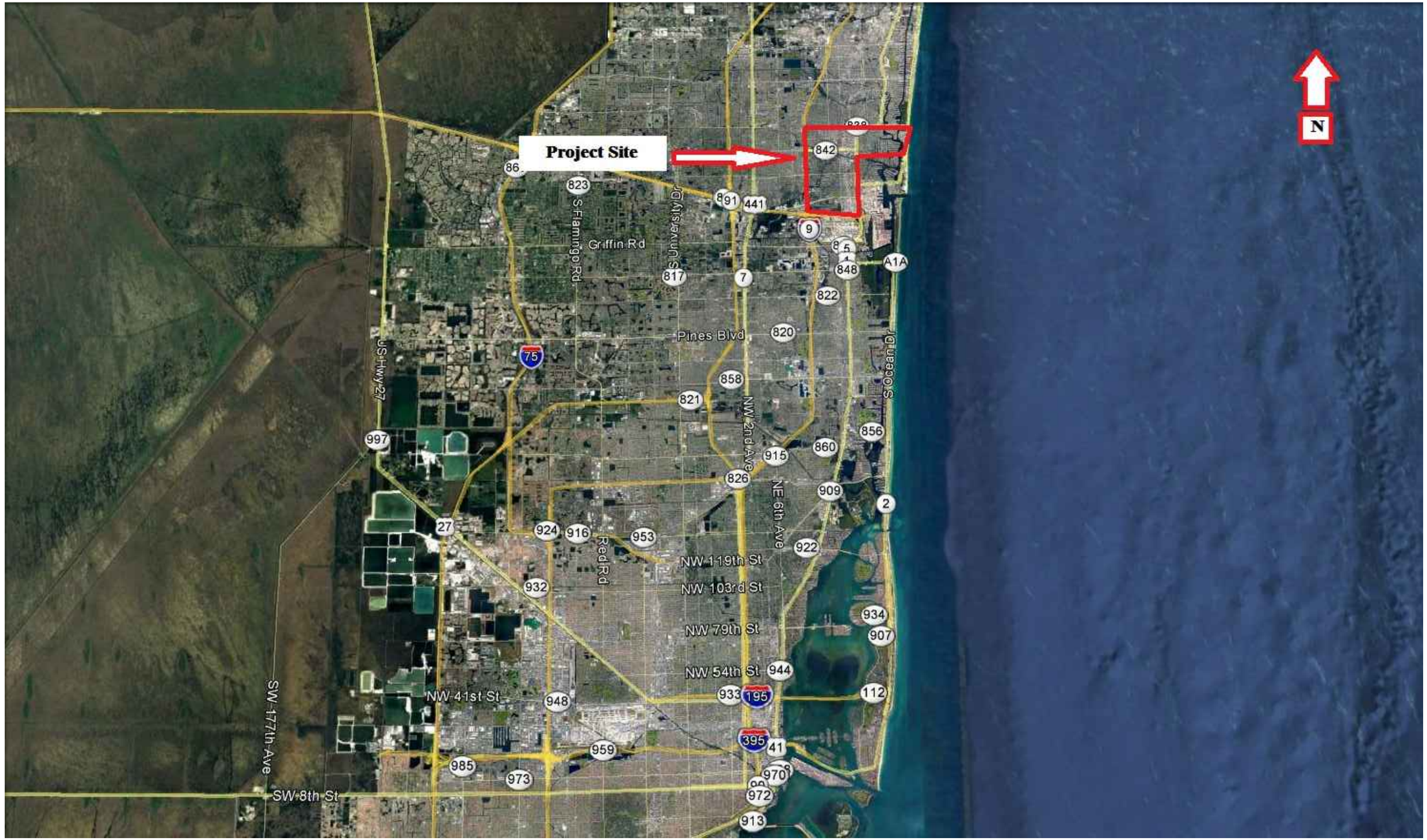

REVISIONS							Names	Dates
Date.	By	Descriptions	Date.	By	Descriptions	Drawn by	KA	11/9/2016
						Checked by	TM	11/9/2016
						Designed by		
						Checked by		
						Approved by		

RADISE
Infrastructure Engineers & Software Developers
LICENSE NO. - 8901

ENGINEER OF RECORD
THOMAS F. MULLIN (P.E.No. 43366)
RADISE International
4152 West Blue Heron Boulevard, Suite # 1114
Riviera Beach, Florida. 33404
TEL 561-841-0103 FAX 561-841-0104
URL : http:// www.radise.net

THE CITY OF FORT LAUDERDALE

COUNTY	CLIENT
BROWARD	HAZEN AND SAWYER

SCALE: VERTICAL N.T.S.
SCALE: HORIZONTAL N.T.S.

SHEET TITLE: VICINITY MAP

PROJECT NAME: FORT LAUDERDALE - 7 NEIGHBORHOODS IMPROVEMENT

SHEET NO. 1

RADISE PROJECT NO: 160605

LEGEND

TEST NUMBER AND APPROXIMATE LOCATION

REVISIONS							Names	Dates
Date.	By	Descriptions	Date.	By	Descriptions	Drawn by	KA	11/9/2016
						Checked by	AB	11/9/2016
						Designed by		
						Checked by		
						Approved by		

RADISE
Infrastructure Engineers & Software Developers
LICENSE NO. - 8901

ENGINEER OF RECORD
RADISE International
4152 West Blue Heron Boulevard, Suite 1114
Riviera Beach, Florida. 33404
TEL 561-841-0103 FAX 561-841-0104
URL : http:// www.radise.net

THE CITY OF FORT LAUDERDALE

COUNTY	CLIENT
BROWARD	HAZEN AND SAWYER

SCALE: VERTICAL N.T.S.
SCALE: HORIZONTAL N.T.S.

SHEET TITLE: TEST LOCATION PLAN

PROJECT NAME: FORT LAUDERDALE - 7 NEIGHBORHOODS IMPROVEMENT

SHEET NO. 2A

RADISE PROJECT NO: 160605

LEGEND

TEST NUMBER AND APPROXIMATE LOCATION

REVISIONS							Names	Dates
Date.	By	Descriptions	Date.	By	Descriptions	Drawn by	KA	11/9/2016
						Checked by	AB	11/9/2016
						Designed by		
						Checked by		
						Approved by		

RADISE
Infrastructure Engineers & Software Developers
LICENSE NO. - 8901

ENGINEER OF RECORD
RADISE International
4152 West Blue Heron Boulevard, Suite 1114
Riviera Beach, Florida. 33404
TEL 561-841-0103 FAX 561-841-0104
URL : http:// www.radise.net

THE CITY OF FORT LAUDERDALE

COUNTY	CLIENT
BROWARD	HAZEN AND SAWYER

SCALE: VERTICAL N.T.S.
SCALE: HORIZONTAL N.T.S.

SHEET TITLE: TEST LOCATION PLAN

PROJECT NAME: FORT LAUDERDALE - 7 NEIGHBORHOODS IMPROVEMENT

SHEET NO. 2B

RADISE PROJECT NO: 160605

LEGEND

TEST NUMBER AND APPROXIMATE LOCATION

REVISIONS							Names	Dates
Date.	By	Descriptions	Date.	By	Descriptions	Drawn by	KA	11/9/2016
						Checked by	AB	11/9/2016
						Designed by		
						Checked by		
						Approved by		

RADISE
Infrastructure Engineers & Software Developers
LICENSE NO. - 8901

ENGINEER OF RECORD
RADISE International
4152 West Blue Heron Boulevard, Suite 1114
Riviera Beach, Florida. 33404
TEL 561-841-0103 FAX 561-841-0104
URL : http:// www.radise.net

THE CITY OF FORT LAUDERDALE

COUNTY	CLIENT
BROWARD	HAZEN AND SAWYER

SCALE: VERTICAL N.T.S.
SCALE: HORIZONTAL N.T.S.

SHEET TITLE: TEST LOCATION PLAN

PROJECT NAME: FORT LAUDERDALE - 7 NEIGHBORHOODS IMPROVEMENT

SHEET NO. 2C

RADISE PROJECT NO: 160605

LEGEND

TEST NUMBER AND APPROXIMATE LOCATION

REVISIONS							Names	Dates
Date.	By	Descriptions	Date.	By	Descriptions	Drawn by	KA	11/9/2016
						Checked by	AB	11/9/2016
						Designed by		
						Checked by		
						Approved by		

RADISE Infrastructure Engineers & Software Developers

LICENSE NO. - 8901

ENGINEER OF RECORD
RADISE International
4152 West Blue Heron Boulevard, Suite 1114
Riviera Beach, Florida. 33404
TEL 561-841-0103 FAX 561-841-0104
URL : http:// www.radise.net

THE CITY OF FORT LAUDERDALE

COUNTY	CLIENT
BROWARD	HAZEN AND SAWYER

SCALE: VERTICAL N.T.S.

SCALE: HORIZONTAL N.T.S.

SHEET TITLE: TEST LOCATION PLAN

PROJECT NAME: FORT LAUDERDALE - 7 NEIGHBORHOODS IMPROVEMENT

SHEET NO. 2D

RADISE PROJECT NO: 160605

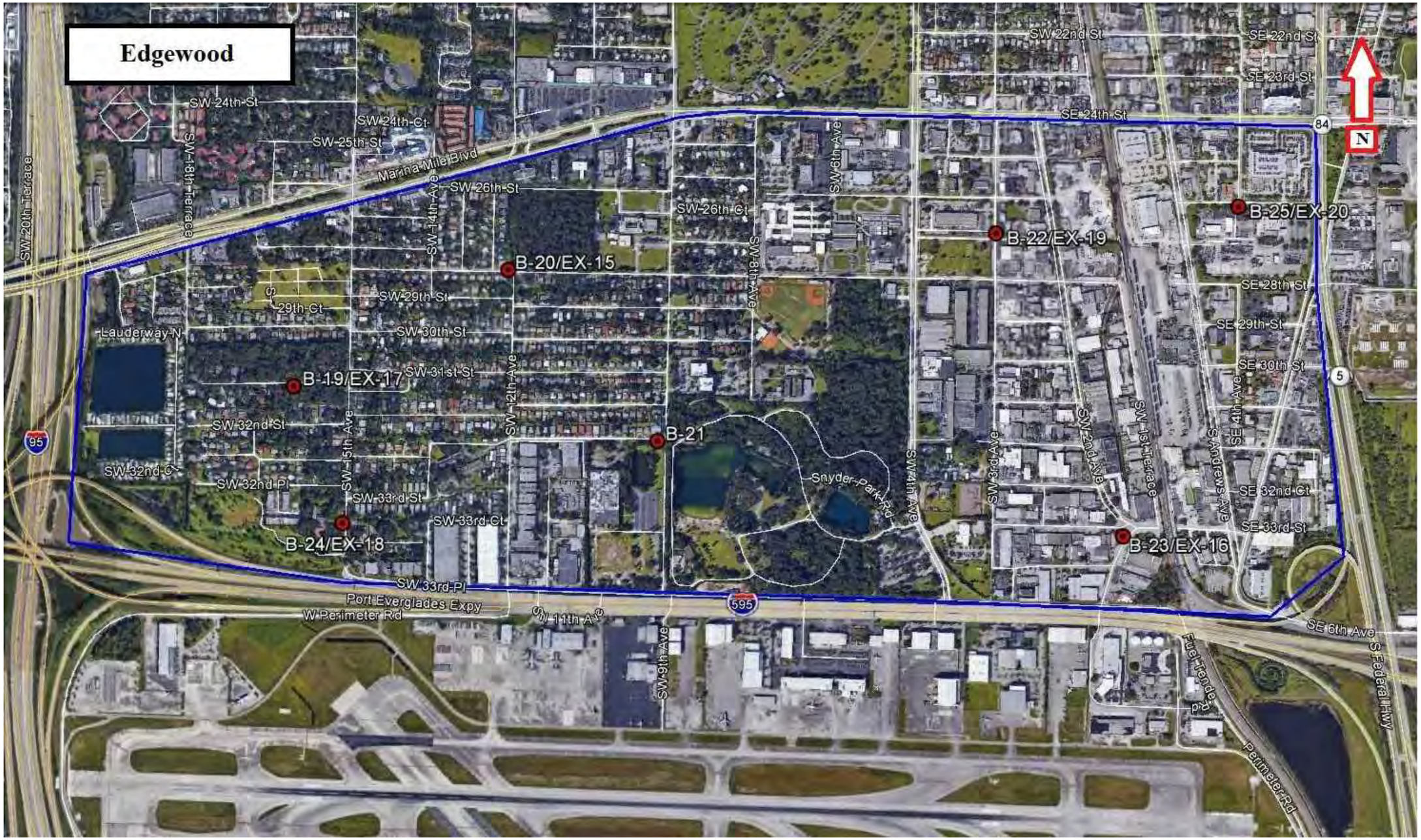

LEGEND

TEST NUMBER AND APPROXIMATE LOCATION

REVISIONS							Names	Dates
Date.	By	Descriptions	Date.	By	Descriptions	Drawn by	KA	11/9/2016
						Checked by	AB	11/9/2016
						Designed by		
						Checked by		
						Approved by		

RADISE
Infrastructure Engineers & Software Developers
LICENSE NO. - 8901

ENGINEER OF RECORD
RADISE International
4152 West Blue Heron Boulevard, Suite 1114
Riviera Beach, Florida. 33404
TEL 561-841-0103 FAX 561-841-0104
URL : http:// www.radise.net

THE CITY OF FORT LAUDERDALE

COUNTY	CLIENT
BROWARD	HAZEN AND SAWYER

SCALE: VERTICAL N.T.S.
SCALE: HORIZONTAL N.T.S.

SHEET TITLE: TEST LOCATION PLAN

PROJECT NAME: FORT LAUDERDALE - 7 NEIGHBORHOODS IMPROVEMENT

SHEET NO. 2E

RADISE PROJECT NO: 160605

LEGEND

TEST NUMBER AND APPROXIMATE LOCATION

REVISIONS							Names	Dates						
Date.	By	Descriptions	Date.	By	Descriptions	Drawn by	KA	11/9/2016	RADISE Infrastructure Engineers & Software Developers	ENGINEER OF RECORD RADISE International 4152 West Blue Heron Boulevard, Suite 1114 Riviera Beach, Florida. 33404 TEL 561-841-0103 FAX 561-841-0104 URL : http:// www.radise.net	THE CITY OF FORT LAUDERDALE		SCALE: VERTICAL N.T.S.	SHEET TITLE: TEST LOCATION PLAN	SHEET NO. 2F
						Checked by	AB	11/9/2016							
						Designed by					COUNTY	CLIENT	SCALE: HORIZONTAL N.T.S.	PROJECT NAME: FORT LAUDERDALE - 7 NEIGHBORHOODS IMPROVEMENT	RADISE PROJECT NO: 160605
						Checked by			LICENSE NO. - 8901		BROWARD	HAZEN AND SAWYER			
						Approved by									

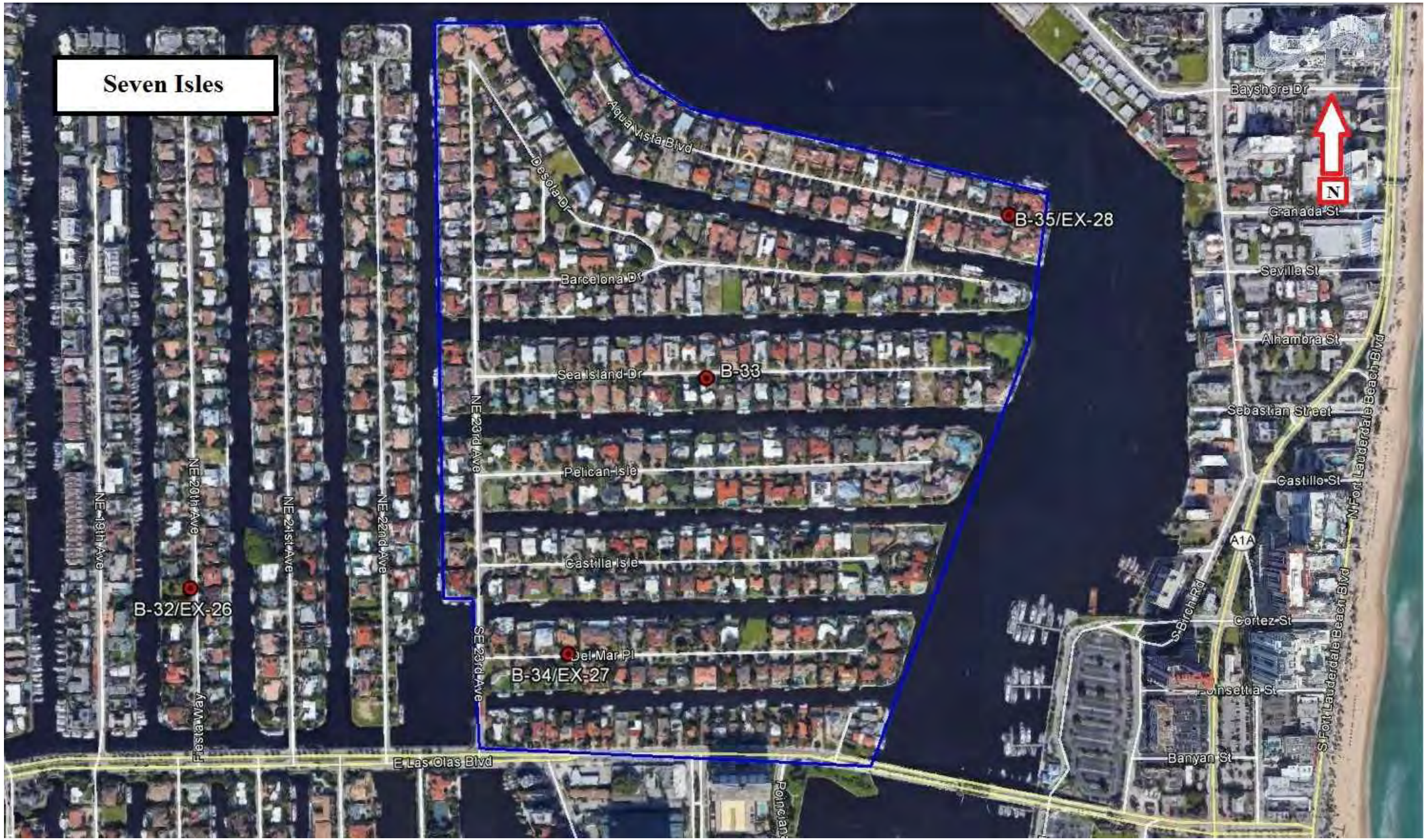

LEGEND

TEST NUMBER AND APPROXIMATE LOCATION

REVISIONS							Names	Dates
Date.	By	Descriptions	Date.	By	Descriptions	Drawn by	KA	11/9/2016
						Checked by	AB	11/9/2016
						Designed by		
						Checked by		
						Approved by		

RADISE
Infrastructure Engineers & Software Developers
LICENSE NO. - 8901

ENGINEER OF RECORD
RADISE International
4152 West Blue Heron Boulevard, Suite 1114
Riviera Beach, Florida. 33404
TEL 561-841-0103 FAX 561-841-0104
URL : http:// www.radise.net

THE CITY OF FORT LAUDERDALE

COUNTY	CLIENT
BROWARD	HAZEN AND SAWYER

SCALE: VERTICAL N.T.S.
SCALE: HORIZONTAL N.T.S.

SHEET TITLE: TEST LOCATION PLAN

PROJECT NAME: FORT LAUDERDALE - 7 NEIGHBORHOODS IMPROVEMENT

SHEET NO. 2G

RADISE PROJECT NO: 160605

BORING NO:	B-1	B-2	B-3	B-4	B-5	B-6	B-7
LATITUDE:	26°08'07.1"N	26°08'05.1"N	26°07'51.6"N	26°07'51.6"N	26°07'38.8"N	26°07'24.9"N	26°07'32.7"N
LONGITUDE:	80°09'58.8"W	80°09'36.1"W	80°09'51.2"W	80°09'36.2"W	80°09'57.5"W	80°08'37.7"W	80°09'25.5"W
DATE:	10-14-16	10-14-16	10-14-16	10-14-16	10-14-16	10-14-16	10-14-16
DRILLER:	TIM FLICKING	TIM FLICKING	TIM FLICKING	TIM FLICKING	TIM FLICKING	TIM FLICKING	TIM FLICKING
RIG:	CME 45	CME 45	CME 45	CME 45	CME 45	CME 45	CME 45

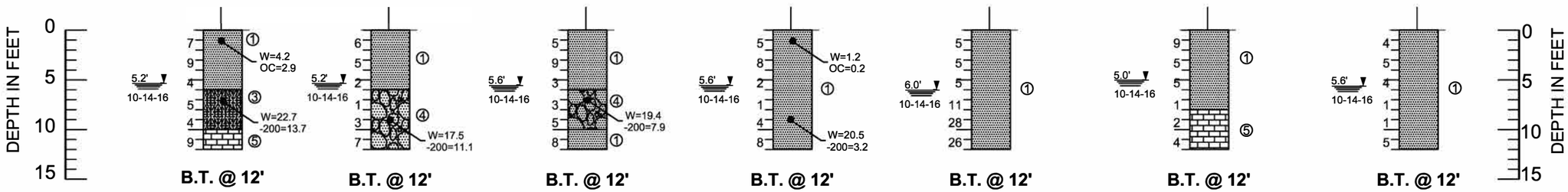

LEGEND

1	GRAY, TAN, BROWN TO DARK BROWN, FINE TO MEDIUM SAND, TRACE ORGANIC, TRACE LIMESTONE FRAGMENTS, TRACE SILT (SP)	
2	GRAY, TAN, BROWN FINE TO MEDIUM SAND, TRACE TO FEW SHELL FRAGMENTS (SP)	
3	GRAY, TAN, BROWN TO DARK BROWN SILTY SAND, WITH LIMESTONE FRAGMENTS (SM)	
4	GRAY, TAN, BROWN TO DARK BROWN SAND, WITH SILT, TRACE LIMESTONE FRAGMENTS (SP, SP-SM)	
5	TAN LIMESTONE	
6	DARK BROWN PEAT (PT)	

B.T. @ 12'	BORING TERMINATED AT 12' BELOW THE EXISTING GROUND SURFACE
PT-SP-SM	UNIFIED SOIL CLASSIFICATION SYSTEM GROUP SYMBOL (ASTM D 2487)
N	STANDARD PENETRATION RESISTANCE- BLOWS PER FOOT USING AUTOMATIC HAMMER
W	MOISTURE CONTENT (%)
OC	ORGANIC CONTENT (%)
-200	AMOUNT PASSING US STANDARD 200 SIEVE (%)

NOTES

(1) BORINGS WERE DRILLED IN OCTOBER OF 2016. SPT BORINGS WERE PERFORMED USING A CME-45C AUTOMATIC HAMMER DRILLING RIG (ASTM D1586).

(2) STRATA BOUNDARIES ARE APPROXIMATE AND REPRESENT SOIL STRATA AT EACH TEST HOLE LOCATION ONLY. SOIL TRANSITIONS MAY BE MORE GRADUAL THAN IMPLIED.

(3) GROUNDWATER LEVELS SHOWN ON THE SUBSURFACE PROFILES REPRESENT GROUNDWATER SURFACES ON THE DATES SHOWN. GROUNDWATER LEVEL FLUCTUATIONS SHOULD BE ANTICIPATED THROUGHOUT THE YEAR.

(4) LATITUDE AND LONGITUDE COORDINATES WERE MEASURED IN THE FIELD USING A HELD HAND GPS.

(5) AFTER COMPLETION OF DRILLING, BOREHOLES WERE BACKFILLED WITH GROUT.

STANDARD PENETRATION TEST DATA

SPOON INSIDE DIA.	1.375 INCH
SPOON OUTSIDE DIA.	2.0 INCHES
AVG. HAMMER DROP	30 INCHES
HAMMER WEIGHT	140 POUNDS

GRANULAR MATERIALS

RELATIVE DENSITY	AUTOMATIC HAMMER SPT N-VALUE BLOWS/FOOT
VERY LOOSE	LESS THAN 3
LOOSE	3 - 8
MEDIUM	8 - 24
DENSE	24 - 40
VERY DENSE	GREATER THAN 40

SILTS AND CLAYS

CONSISTENCY	AUTOMATIC HAMMER SPT N-VALUE BLOWS/FOOT
VERY SOFT	LESS THAN 1
SOFT	1 - 3
FIRM	3 - 6
STIFF	6 - 12
VERY STIFF	12 - 24
HARD	GREATER THAN 24

REVISIONS

Date.	By	Descriptions	Date.	By	Descriptions

	Names	Dates
Drawn by	K.A.	01/03/2017
Checked by	A.B.	01/03/2017
Designed by		
Checked by		
Approved by		

RADISE
LICENSE NO. - 8901

ENGINEER OF RECORD
RADISE International
4152 West Blue Heron Boulevard, Suite 228
Riviera Beach, Florida. 33404
TEL 561-841-0103 FAX 561-841-0104
URL : http:// www.radise.net

CITY OF FORT LAUDERDALE

COUNTY	CLIENT
BROWARD	HAZEN AND SAWYER

SCALE: VERTICAL N.T.S.
SCALE: HORIZONTAL N.T.S.

SHEET TITLE: SPT BORING SUBSURFACE PROFILES

PROJECT NAME: FORT LAUDERDALE - 7 NEIGHBORHOODS IMPROVEMENT

SHEET NO. 3A

RADISE PROJECT NO: 160605

BORING NO:	B-8	B-9	B-10	B-11	B-12	B-13	B-14
LATITUDE:	26°07'25.7"N	26°07'39.5"N	26°08'06.1"N	26°08'05.7"N	26°07'47.0"N	26°07'26.7"N	26°06'21.6"N
LONGITUDE:	80°09'07.4"W	80°09'09.3W"	80°08'39.7"W	80°09'06.4"W	80°08'56.0"W	80°08'58.6"W	80°09'26.9"W
DATE:	10-15-16	10-15-16	10-17-16	10-17-16	10-17-16	10-17-16	10-22-16
DRILLER:	TIM FLICKING	TIM FLICKING	TIM FLICKING	TIM FLICKING	TIM FLICKING	TIM FLICKING	TIM FLICKING
RIG:	CME 45	CME 45	CME 45	CME 45	CME 45	CME 45	CME 45

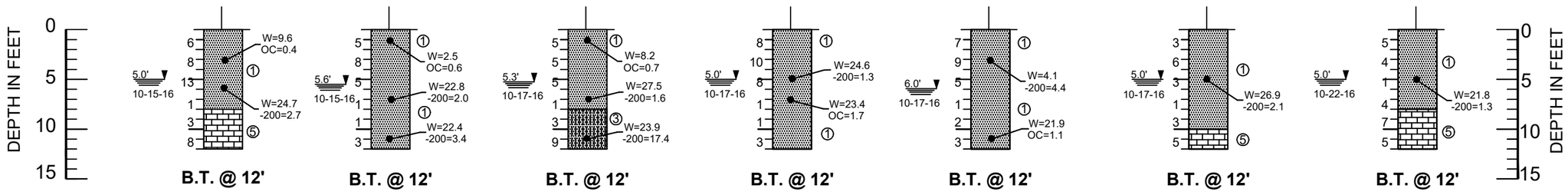

LEGEND

1	GRAY, TAN, BROWN TO DARK BROWN, FINE TO MEDIUM SAND, TRACE ORGANIC, TRACE LIMESTONE FRAGMENTS, TRACE SILT (SP)	
2	GRAY, TAN, BROWN FINE TO MEDIUM SAND, TRACE TO FEW SHELL FRAGMENTS (SP)	
3	GRAY, TAN, BROWN TO DARK BROWN SILTY SAND, WITH LIMESTONE FRAGMENTS (SM)	
4	GRAY, TAN, BROWN TO DARK BROWN SAND, WITH SILT, TRACE LIMESTONE FRAGMENTS (SP, SP-SM)	
5	TAN LIMESTONE	
6	DARK BROWN PEAT (PT)	

B.T. @ 12'	BORING TERMINATED AT 12' BELOW THE EXISTING GROUND SURFACE
PT-SP-SM	UNIFIED SOIL CLASSIFICATION SYSTEM GROUP SYMBOL (ASTM D 2487)
N	STANDARD PENETRATION RESISTANCE- BLOWS PER FOOT USING AUTOMATIC HAMMER
W	MOISTURE CONTENT (%)
OC	ORGANIC CONTENT (%)
-200	AMOUNT PASSING US STANDARD 200 SIEVE (%)

NOTES

(1) BORINGS WERE DRILLED IN OCTOBER OF 2016. SPT BORINGS WERE PERFORMED USING A CME-45C AUTOMATIC HAMMER DRILLING RIG (ASTM D1586).

(2) STRATA BOUNDARIES ARE APPROXIMATE AND REPRESENT SOIL STRATA AT EACH TEST HOLE LOCATION ONLY. SOIL TRANSITIONS MAY BE MORE GRADUAL THAN IMPLIED.

(3) GROUNDWATER LEVELS SHOWN ON THE SUBSURFACE PROFILES REPRESENT GROUNDWATER SURFACES ON THE DATES SHOWN. GROUNDWATER LEVEL FLUCTUATIONS SHOULD BE ANTICIPATED THROUGHOUT THE YEAR.

(4) LATITUDE AND LONGITUDE COORDINATES WERE MEASURED IN THE FIELD USING A HELD HAND GPS.

(5) AFTER COMPLETION OF DRILLING, BOREHOLES WERE BACKFILLED WITH GROUT.

STANDARD PENETRATION TEST DATA

SPOON INSIDE DIA.	1.375 INCH
SPOON OUTSIDE DIA.	2.0 INCHES
AVG. HAMMER DROP	30 INCHES
HAMMER WEIGHT	140 POUNDS

GRANULAR MATERIALS

RELATIVE DENSITY	AUTOMATIC HAMMER SPT N-VALUE BLOWS/FOOT
VERY LOOSE	LESS THAN 3
LOOSE	3 - 8
MEDIUM	8 - 24
DENSE	24 - 40
VERY DENSE	GREATER THAN 40

SILTS AND CLAYS

CONSISTENCY	AUTOMATIC HAMMER SPT N-VALUE BLOWS/FOOT
VERY SOFT	LESS THAN 1
SOFT	1 - 3
FIRM	3 - 6
STIFF	6 - 12
VERY STIFF	12 - 24
HARD	GREATER THAN 24

REVISIONS

Date.	By	Descriptions	Date.	By	Descriptions

	Names	Dates
Drawn by	K.A.	01/03/2017
Checked by	A.B.	01/03/2017
Designed by		
Checked by		
Approved by		

RADISE Infrastructure Engineers & Software Developers

LICENSE NO. - 8901

ENGINEER OF RECORD
RADISE International
4152 West Blue Heron Boulevard, Suite 228
Riviera Beach, Florida. 33404
TEL 561-841-0103 FAX 561-841-0104
URL : http:// www.radise.net

CITY OF FORT LAUDERDALE

COUNTY	CLIENT
BROWARD	HAZEN AND SAWYER

SCALE: VERTICAL N.T.S.

SCALE: HORIZONTAL N.T.S.

SHEET TITLE: SPT BORING SUBSURFACE PROFILES

PROJECT NAME: FORT LAUDERDALE - 7 NEIGHBORHOODS IMPROVEMENT

SHEET NO. 3B

RADISE PROJECT NO: 160605

BORING NO:	B-15	B-16	B-17	B-18	B-19	B-20	B-21
LATITUDE:	26°06'05.3"N	26°05'49.7"N	26°05'45.8"N	26°05'36.7"N	26°05'10.2"N	26°05'20.0"N	26°05'06.5"N
LONGITUDE:	80°09'19.3"W	80°09'24.9W"	80°09'52.2"W	80°09'58.2"W	80°09'43.8"W	80°09'24.7"W	80°09'10.7"W
DATE:	10-22-16	10-22-16	10-22-16	10-21-16	10-21-16	10-20-16	10-20-16
DRILLER:	TIM FLICKING	TIM FLICKING	TIM FLICKING	TIM FLICKING	TIM FLICKING	TIM FLICKING	TIM FLICKING
RIG:	CME 45	CME 45	CME 45	CME 45	CME 45	CME 45	CME 45

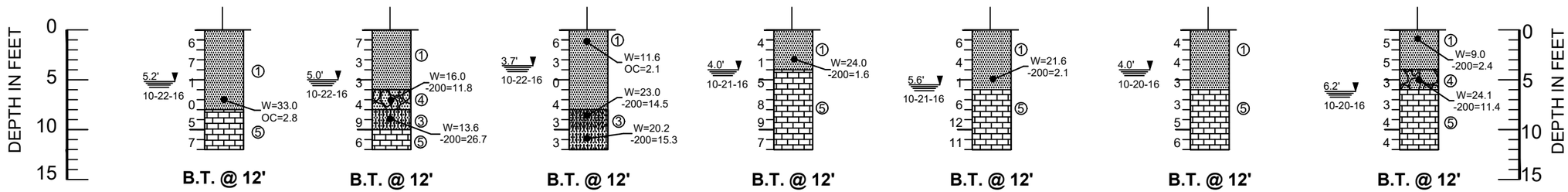

LEGEND

1	GRAY, TAN, BROWN TO DARK BROWN, FINE TO MEDIUM SAND, TRACE ORGANIC, TRACE LIMESTONE FRAGMENTS, TRACE SILT (SP)	
2	GRAY, TAN, BROWN FINE TO MEDIUM SAND, TRACE TO FEW SHELL FRAGMENTS (SP)	
3	GRAY, TAN, BROWN TO DARK BROWN SILTY SAND, WITH LIMESTONE FRAGMENTS (SM)	
4	GRAY, TAN, BROWN TO DARK BROWN SAND, WITH SILT, TRACE LIMESTONE FRAGMENTS (SP, SP-SM)	
5	TAN LIMESTONE	
6	DARK BROWN PEAT (PT)	

B.T. @ 12'	BORING TERMINATED AT 12' BELOW THE EXISTING GROUND SURFACE
PT-SP-SM	UNIFIED SOIL CLASSIFICATION SYSTEM GROUP SYMBOL (ASTM D 2487)
N	STANDARD PENETRATION RESISTANCE- BLOWS PER FOOT USING AUTOMATIC HAMMER
W	MOISTURE CONTENT (%)
OC	ORGANIC CONTENT (%)
-200	AMOUNT PASSING US STANDARD 200 SIEVE (%)

NOTES

(1) BORINGS WERE DRILLED IN OCTOBER OF 2016. SPT BORINGS WERE PERFORMED USING A CME-45C AUTOMATIC HAMMER DRILLING RIG (ASTM D1586).

(2) STRATA BOUNDARIES ARE APPROXIMATE AND REPRESENT SOIL STRATA AT EACH TEST HOLE LOCATION ONLY. SOIL TRANSITIONS MAY BE MORE GRADUAL THAN IMPLIED.

(3) GROUNDWATER LEVELS SHOWN ON THE SUBSURFACE PROFILES REPRESENT GROUNDWATER SURFACES ON THE DATES SHOWN. GROUNDWATER LEVEL FLUCTUATIONS SHOULD BE ANTICIPATED THROUGHOUT THE YEAR.

(4) LATITUDE AND LONGITUDE COORDINATES WERE MEASURED IN THE FIELD USING A HELD HAND GPS.

(5) AFTER COMPLETION OF DRILLING, BOREHOLES WERE BACKFILLED WITH GROUT.

STANDARD PENETRATION TEST DATA

SPOON INSIDE DIA.	1.375 INCH
SPOON OUTSIDE DIA.	2.0 INCHES
AVG. HAMMER DROP	30 INCHES
HAMMER WEIGHT	140 POUNDS

GRANULAR MATERIALS

RELATIVE DENSITY	AUTOMATIC HAMMER SPT N-VALUE BLOWS/FOOT
VERY LOOSE	LESS THAN 3
LOOSE	3 - 8
MEDIUM	8 - 24
DENSE	24 - 40
VERY DENSE	GREATER THAN 40

SILTS AND CLAYS

CONSISTENCY	AUTOMATIC HAMMER SPT N-VALUE BLOWS/FOOT
VERY SOFT	LESS THAN 1
SOFT	1 - 3
FIRM	3 - 6
STIFF	6 - 12
VERY STIFF	12 - 24
HARD	GREATER THAN 24

REVISIONS

Date.	By	Descriptions	Date.	By	Descriptions

	Names	Dates
Drawn by	K.A.	01/03/2017
Checked by	A.B.	01/03/2017
Designed by		
Checked by		
Approved by		

RADISE Infrastructure Engineers & Software Developers

LICENSE NO. - 8901

ENGINEER OF RECORD
RADISE International
4152 West Blue Heron Boulevard, Suite 228
Riviera Beach, Florida. 33404
TEL 561-841-0103 FAX 561-841-0104
URL : http:// www.radise.net

CITY OF FORT LAUDERDALE

COUNTY	CLIENT
BROWARD	HAZEN AND SAWYER

SCALE: VERTICAL N.T.S.

SCALE: HORIZONTAL N.T.S.

SHEET TITLE: SPT BORING SUBSURFACE PROFILES

PROJECT NAME: FORT LAUDERDALE - 7 NEIGHBORHOODS IMPROVEMENT

SHEET NO. 3C

RADISE PROJECT NO: 160605

	B-22	B-23	B-24	B-25	B-26	B-27	B-28
BORING NO:	B-22	B-23	B-24	B-25	B-26	B-27	B-28
LATITUDE:	26°05'24.2"N	26°04'59.9"N	26°04'58.9"N	26°05'27.0"N	26°07'53.9"N	26°07'34.9"N	26°07'24.9"N
LONGITUDE:	80°08'40.8"W	80°08'28.3W"	80°09'38.8"W	80°08'18.8"W	80°08'06.7"W	80°07'56.6"W	80°07'35.9"W
DATE:	10-20-16	10-20-16	10-21-16	10-21-16	10-17-16	10-19-16	10-18-16
DRILLER:	TIM FLICKING	TIM FLICKING	TIM FLICKING	TIM FLICKING	TIM FLICKING	TIM FLICKING	TIM FLICKING
RIG:	CME 45	CME 45	CME 45	CME 45	CME 45	CME 45	CME 45

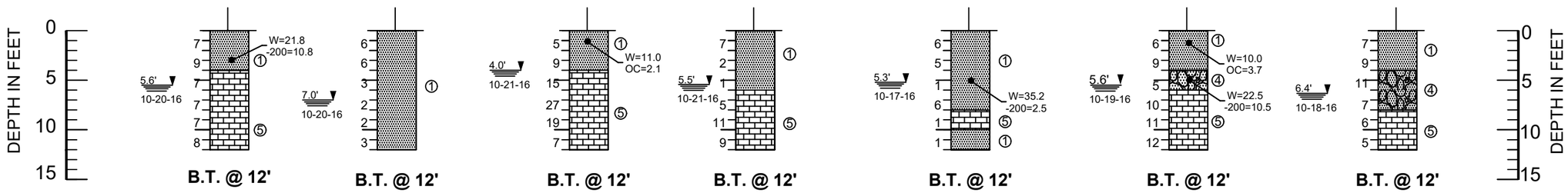

LEGEND

1	GRAY, TAN, BROWN TO DARK BROWN, FINE TO MEDIUM SAND, TRACE ORGANIC, TRACE LIMESTONE FRAGMENTS, TRACE SILT (SP)
2	GRAY, TAN, BROWN FINE TO MEDIUM SAND, TRACE TO FEW SHELL FRAGMENTS (SP)
3	GRAY, TAN, BROWN TO DARK BROWN SILTY SAND, WITH LIMESTONE FRAGMENTS (SM)
4	GRAY, TAN, BROWN TO DARK BROWN SAND, WITH SILT, TRACE LIMESTONE FRAGMENTS (SP, SP-SM)
5	TAN LIMESTONE
6	DARK BROWN PEAT (PT)

B.T. @ 12'	BORING TERMINATED AT 12' BELOW THE EXISTING GROUND SURFACE
PT-SP-SM	UNIFIED SOIL CLASSIFICATION SYSTEM GROUP SYMBOL (ASTM D 2487)
N	STANDARD PENETRATION RESISTANCE- BLOWS PER FOOT USING AUTOMATIC HAMMER
W	MOISTURE CONTENT (%)
OC	ORGANIC CONTENT (%)
-200	AMOUNT PASSING US STANDARD 200 SIEVE (%)

NOTES

(1) BORINGS WERE DRILLED IN OCTOBER OF 2016. SPT BORINGS WERE PERFORMED USING A CME-45C AUTOMATIC HAMMER DRILLING RIG (ASTM D1586).

(2) STRATA BOUNDARIES ARE APPROXIMATE AND REPRESENT SOIL STRATA AT EACH TEST HOLE LOCATION ONLY. SOIL TRANSITIONS MAY BE MORE GRADUAL THAN IMPLIED.

(3) GROUNDWATER LEVELS SHOWN ON THE SUBSURFACE PROFILES REPRESENT GROUNDWATER SURFACES ON THE DATES SHOWN. GROUNDWATER LEVEL FLUCTUATIONS SHOULD BE ANTICIPATED THROUGHOUT THE YEAR.

(4) LATITUDE AND LONGITUDE COORDINATES WERE MEASURED IN THE FIELD USING A HELD HAND GPS.

(5) AFTER COMPLETION OF DRILLING, BOREHOLES WERE BACKFILLED WITH GROUT.

STANDARD PENETRATION TEST DATA

SPOON INSIDE DIA.	1.375 INCH
SPOON OUTSIDE DIA.	2.0 INCHES
AVG. HAMMER DROP	30 INCHES
HAMMER WEIGHT	140 POUNDS

GRANULAR MATERIALS

RELATIVE DENSITY	AUTOMATIC HAMMER SPT N-VALUE BLOWS/FOOT
VERY LOOSE	LESS THAN 3
LOOSE	3 - 8
MEDIUM	8 - 24
DENSE	24 - 40
VERY DENSE	GREATER THAN 40

SILTS AND CLAYS

CONSISTENCY	AUTOMATIC HAMMER SPT N-VALUE BLOWS/FOOT
VERY SOFT	LESS THAN 1
SOFT	1 - 3
FIRM	3 - 6
STIFF	6 - 12
VERY STIFF	12 - 24
HARD	GREATER THAN 24

REVISIONS

Date.	By	Descriptions	Date.	By	Descriptions

	Names	Dates
Drawn by	K.A.	01/03/2017
Checked by	A.B.	01/03/2017
Designed by		
Checked by		
Approved by		

RADISE Infrastructure Engineers & Software Developers

LICENSE NO. - 8901

ENGINEER OF RECORD
RADISE International
4152 West Blue Heron Boulevard, Suite 228
Riviera Beach, Florida. 33404
TEL 561-841-0103 FAX 561-841-0104
URL : http:// www.radise.net

CITY OF FORT LAUDERDALE

COUNTY	CLIENT
BROWARD	HAZEN AND SAWYER

SCALE: VERTICAL N.T.S.

SCALE: HORIZONTAL N.T.S.

SHEET TITLE: SPT BORING SUBSURFACE PROFILES

PROJECT NAME: FORT LAUDERDALE - 7 NEIGHBORHOODS IMPROVEMENT

SHEET NO. 3D

RADISE PROJECT NO: 160605

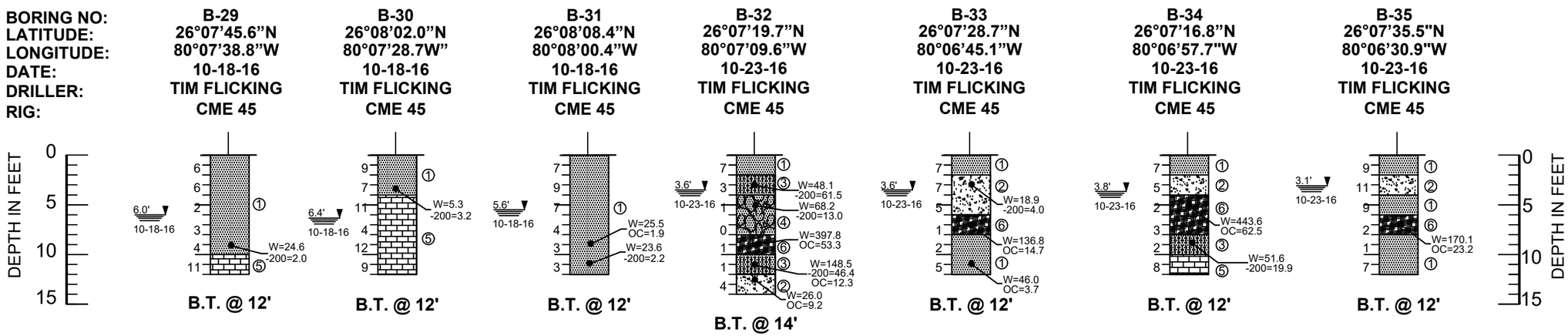

LEGEND

①	GRAY, TAN, BROWN TO DARK BROWN, FINE TO MEDIUM SAND, TRACE ORGANIC, TRACE LIMESTONE FRAGMENTS, TRACE SILT (SP)
②	GRAY, TAN, BROWN FINE TO MEDIUM SAND, TRACE TO FEW SHELL FRAGMENTS (SP)
③	GRAY, TAN, BROWN TO DARK BROWN SILTY SAND, WITH LIMESTONE FRAGMENTS (SM)
④	GRAY, TAN, BROWN TO DARK BROWN SAND, WITH SILT, TRACE LIMESTONE FRAGMENTS (SP, SP-SM)
⑤	TAN LIMESTONE
⑥	DARK BROWN PEAT (PT)

B.T. @ 12'	BORING TERMINATED AT 12' BELOW THE EXISTING GROUND SURFACE
PT-SP-SM	UNIFIED SOIL CLASSIFICATION SYSTEM GROUP SYMBOL (ASTM D 2487)
N	STANDARD PENETRATION RESISTANCE- BLOWS PER FOOT USING AUTOMATIC HAMMER
W	MOISTURE CONTENT (%)
OC	ORGANIC CONTENT (%)
-200	AMOUNT PASSING US STANDARD 200 SIEVE (%)

NOTES

(1) BORINGS WERE DRILLED IN OCTOBER OF 2016. SPT BORINGS WERE PERFORMED USING A CME-45C AUTOMATIC HAMMER DRILLING RIG (ASTM D1586).

(2) STRATA BOUNDARIES ARE APPROXIMATE AND REPRESENT SOIL STRATA AT EACH TEST HOLE LOCATION ONLY. SOIL TRANSITIONS MAY BE MORE GRADUAL THAN IMPLIED.

(3) GROUNDWATER LEVELS SHOWN ON THE SUBSURFACE PROFILES REPRESENT GROUNDWATER SURFACES ON THE DATES SHOWN. GROUNDWATER LEVEL FLUCTUATIONS SHOULD BE ANTICIPATED THROUGHOUT THE YEAR.

(4) LATITUDE AND LONGITUDE COORDINATES WERE MEASURED IN THE FIELD USING A HELD HAND GPS.

(5) AFTER COMPLETION OF DRILLING, BOREHOLES WERE BACKFILLED WITH GROUT.

STANDARD PENETRATION TEST DATA

SPOON INSIDE DIA.	1.375 INCH
SPOON OUTSIDE DIA.	2.0 INCHES
AVG. HAMMER DROP	30 INCHES
HAMMER WEIGHT	140 POUNDS

GRANULAR MATERIALS

RELATIVE DENSITY	AUTOMATIC HAMMER SPT N-VALUE BLOWS/FOOT
VERY LOOSE	LESS THAN 3
LOOSE	3 - 8
MEDIUM	8 - 24
DENSE	24 - 40
VERY DENSE	GREATER THAN 40

SILTS AND CLAYS

CONSISTENCY	AUTOMATIC HAMMER SPT N-VALUE BLOWS/FOOT
VERY SOFT	LESS THAN 1
SOFT	1 - 3
FIRM	3 - 6
STIFF	6 - 12
VERY STIFF	12 - 24
HARD	GREATER THAN 24

REVISIONS

Date.	By	Descriptions	Date.	By	Descriptions

	Names	Dates
Drawn by	K.A.	01/03/2017
Checked by	A.B.	01/03/2017
Designed by		
Checked by		
Approved by		

RADISE Infrastructure Engineers & Software Development

LICENSE NO. - 8901

ENGINEER OF RECORD
RADISE International
4152 West Blue Heron Boulevard, Suite 228
Riviera Beach, Florida. 33404
TEL 561-841-0103 FAX 561-841-0104
URL : http:// www.radise.net

CITY OF FORT LAUDERDALE

COUNTY	CLIENT
BROWARD	HAZEN AND SAWYER

SCALE: VERTICAL N.T.S.

SCALE: HORIZONTAL N.T.S.

SHEET TITLE: SPT BORING SUBSURFACE PROFILES

PROJECT NAME: FORT LAUDERDALE - 7 NEIGHBORHOODS IMPROVEMENT

SHEET NO. 3E

RADISE PROJECT NO: 160605

Table A-1 - Laboratory Test Results Summary

Project Name: Fort Lauderdale-7 Neighborhoods

Project ID: 160605

						GRAIN SIZE ANALYSIS U.S STANDARD SIEVE SIZE (% Passing)														
Boring No	**Sample Depth**	**Soil Classification**	**Moisture Content (%)**	**Organic Content (%)**	**-200**	**3"**	**1.5"**	**1"**	**3/4"**	**1/2"**	**3/8"**	**#4**	**#10**	**#20**	**#40**	**#50**	**#60**	**#100**	**#140**	**#200**
B-1	0-2	SP	4.2	2.9	-	-	-	-	-	-	-	-	-	-	-	-	-	-	-	-
B-1	6-8	SP-SM	22.7	-	13.7	100	100	-	95.3	-	65.1	55.5	49.7	45.3	38.3	29.7	25.5	17.2	15.0	13.7
B-2	8-10	SP-SM	17.5	-	11.1	100	100	-	100	-	90.4	82.4	77.8	76.5	72.3	57.2	41.9	16.3	13.0	11.1
B-3	6-8	SP-SM	19.4	-	7.9	-	-	-	-	-	-	-	-	-	-	-	-	-	-	-
B-4	0-2	SP	1.2	0.2	-	-	-	-	-	-	-	-	-	-	-	-	-	-	-	-
B-4	8-10	SP	20.5	-	3.2	100	100	-	100	-	96.7	94.1	93.1	92.4	81.7	56.9	42.9	10.7	3.9	3.2
B-8	2-4	SP	9.6	0.4	-	-	-	-	-	-	-	-	-	-	-	-	-	-	-	-
B-8	6-8	SP	24.7	-	2.7	100	100	-	100	-	100	100	100	99.5	87.1	72.4	61.2	22.4	4.7	2.7
B-9	0-2	SP	2.5	0.6	-	-	-	-	-	-	-	-	-	-	-	-	-	-	-	-
B-9	10-12	SP	22.4	-	3.4	-	-	-	-	-	-	-	-	-	-	-	-	-	-	-
B-9	6-8	SP	22.8	-	2.0	100	100	-	100	-	100	100	100	99.7	88.4	67.3	49.0	9.0	2.8	2.0
B-10	0-2	SP	8.2	0.7	-	-	-	-	-	-	-	-	-	-	-	-	-	-	-	-
B-10	10-12	SM	23.9	-	17.4	100	100	-	99.0	-	94.2	87.4	84.9	83.6	65.7	45.7	38.5	26.6	21.9	17.4
B-10	6-8	SP	27.5	-	1.6	-	-	-	-	-	-	-	-	-	-	-	-	-	-	-
B-11	4-6	SP	24.6	-	1.3	100	100	-	100	100	100	100	100	99.4	87.2	70.4	57.8	16.2	2.4	1.3
B-11	6-8	SP	23.4	1.7	-	-	-	-	-	-	-	-	-	-	-	-	-	-	-	-
B-12	10-12	SP	21.9	1.1	-	-	-	-	-	-	-	-	-	-	-	-	-	-	-	-
B-12	2-4	SP	4.1	-	4.4	100	100	-	100	-	100	96.9	95.6	94.6	84.9	66.9	53.1	12.6	5.8	4.4
B-13	4-6	SP	26.9	-	2.1	-	-	-	-	-	-	-	-	-	-	-	-	-	-	-
B-14	6-8	SP	21.8	-	1.3	-	-	-	-	-	-	-	-	-	-	-	-	-	-	-
B-15	6-8	SP	33	2.8	-	-	-	-	-	-	-	-	-	-	-	-	-	-	-	-
B-16	6-8	SP-SM	16	-	11.8	-	-	-	-	-	-	-	-	-	-	-	-	-	-	-
B-16	8-10	SM	13.6	-	26.7	100	100	-	97.7	-	88.6	75.6	68.1	64.6	58.0	51.1	47.2	34.3	30.9	26.7

B-17	0-2	SP	11.6	2.1	-	-	-	-	-	-	-	-	-	-	-	-	-	-	-	-
B-17	10-12	SM	20.2	-	15.3	-	-	-	-	-	-	-	-	-	-	-	-	-	-	-
B-17	8-10	SM	23	-	14.5	100	100	-	95.2	-	94.3	88.5	86.3	84.7	78.7	69.1	59.7	22.8	15.5	14.5
B-18	2-4	SP	24	-	1.6	-	-	-	-	-	-	-	-	-	-	-	-	-	-	-
B-19	4-6	SP	21.6	-	2.1	100	100	-	100	-	100	100	100	99.1	80.5	57.9	42.8	6.3	2.4	2.1
B-21	0-2	SP	9	2.4	-	-	-	-	-	-	-	-	-	-	-	-	-	-	-	-
B-21	4-6	SP-SM	24.1	-	11.4	-	-	-	-	-	-	-	-	-	-	-	-	-	-	-
B-22	2-4	SP-SM	21.8	-	10.8	-	-	-	-	-	-	-	-	-	-	-	-	-	-	-
B-24	0-2	SP	11	2.1	-	-	-	-	-	-	-	-	-	-	-	-	-	-	-	-
B-26	4-6	SP	35.2	-	2.5	100	100	-	100	-	100	100	100	98.7	83.6	63.4	45.2	6.0	2.9	2.5
B-27	0-2	SP	10	3.7	-	-	-	-	-	-	-	-	-	-	-	-	-	-	-	-
B-27	4-6	SP-SM	22.5	-	10.5	100	100	-	76.1	-	72.2	69.6	67.6	66.2	59.3	51.6	45.1	16.4	11.9	10.5
B-29	8-10	SP	24.6	-	2.0	-	-	-	-	-	-	-	-	-	-	-	-	-	-	-
B-30	2-4	SP	5.3	-	3.2	100	100	-	98.1	-	96.7	95.4	94.2	92.7	79.4	61.5	48.3	9.4	3.9	3.2
B-31	10-12	SP	23.6	-	2.2	-	-	-	-	-	-	-	-	-	-	-	-	-	-	-
B-31	8-10	SP	25.5	1.9	-	-	-	-	-	-	-	-	-	-	-	-	-	-	-	-
B-32	10-12	SM	148.5	12.3	46.4	-	-	-	-	-	-	-	-	-	-	-	-	-	-	-
B-32	12-14	SP-SM	26	-	9.2	100	-	98.1	92.8	-	91.1	85.9	81.0	75.0	65.4	54.5	47.2	21.2	11.9	9.2
B-32	2-4	SM	48.1	-	61.5	100	100	-	93.0	-	90.2	85.1	82.6	81.3	79.3	77.3	75.9	69.5	64.9	61.5
B-32	4-6	SM	68.2	-	13.0	-	-	-	-	-	-	-	-	-	-	-	-	-	-	-
B-32	8-10	PT	397.8	53.3	-	-	-	-	-	-	-	-	-	-	-	-	-	-	-	-
B-33	10-12	SP	46	3.7	-	-	-	-	-	-	-	-	-	-	-	-	-	-	-	-
B-33	2-4	SP	18.9	-	4.0	100	100	-	100	-	100	98.7	94.4	78.4	46.5	30.5	23.6	8.5	4.9	4.0
B-33	6-8	PT	136.8	14.7	-	-	-	-	-	-	-	-	-	-	-	-	-	-	-	-
B-34	4-6	PT	443.6	62.5	-	-	-	-	-	-	-	-	-	-	-	-	-	-	-	-
B-34	8-10	SM	51.6	-	19.9	100	100	-	100	-	100	98.1	95.2	92.9	86.7	78.3	72.6	43.0	24.8	19.9
B-35	6-8	PT	170.1	23.2	-	-	-	-	-	-	-	-	-	-	-	-	-	-	-	-

Notes:

Moisture Content tested in accordance ASTM-D2216,
Organic Content tests are performed with furnace temperature @450 Celsius and tested accordance ASTM-D2974,
Soil Classification tested with accordance to ASTM D 2487,
Grain Size Analysis was tested in general accordance with ASTM-D422.

GRAIN SIZE DISTRIBUTION

CLIENT NAME Hazen and Sawyer, P.C. **PROJECT NAME** Fort Lauderdale-7 Neighborhoods - Hazen and Sawyer

PROJECT NUMBER 160605

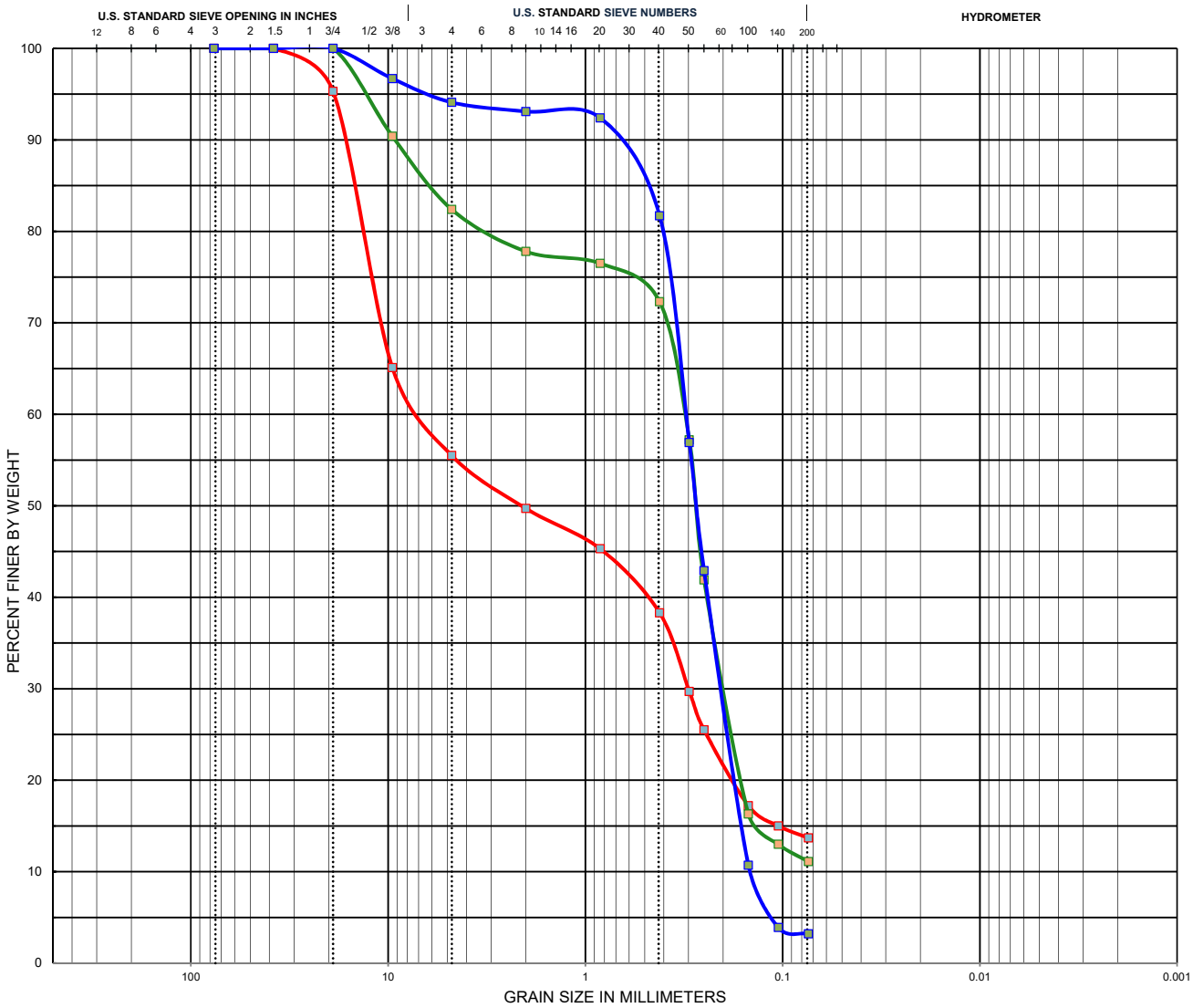

COBBLES	GRAVEL		SAND			SILT OR CLAY
	coarse	fine	coarse	medium	fine	

Boring No, Depth	Classification	LL	PL	PI	Cc	Cu
B-1 , 6-8	**SP-SM**	**NP**	**NP**	**NP**	**0**	**0**
B-2 , 8-10	**SP-SM**	**NP**	**NP**	**NP**	**0**	**0**
B-4 , 8-10	**SP**	**NP**	**NP**	**NP**	**1.02**	**2.21**

Boring No, Depth	D100	D60	D30	D10	% Cobble	%Gravel	%Sand	%Silt	%Clay
B-1 , 6-8	**38.1**	**6.99**	**0.3**	**0**	**0**	**44.5**	**41.8**	**13.7**	
B-2 , 8-10	**19**	**0.32**	**0.2**	**0**	**0**	**17.6**	**71.3**	**11.1**	
B-4 , 8-10	**19**	**0.31**	**0.21**	**0.14**	**0**	**5.9**	**90.9**	**3.2**	

In accordance with ASTM E 329 this report shall not be reproduced, except in full without the prior written approval of RADISE International

GRAIN SIZE DISTRIBUTION

CLIENT NAME Hazen and Sawyer, P.C. **PROJECT NAME** Fort Lauderdale-7 Neighborhoods - Hazen and Sawyer

PROJECT NUMBER 160605

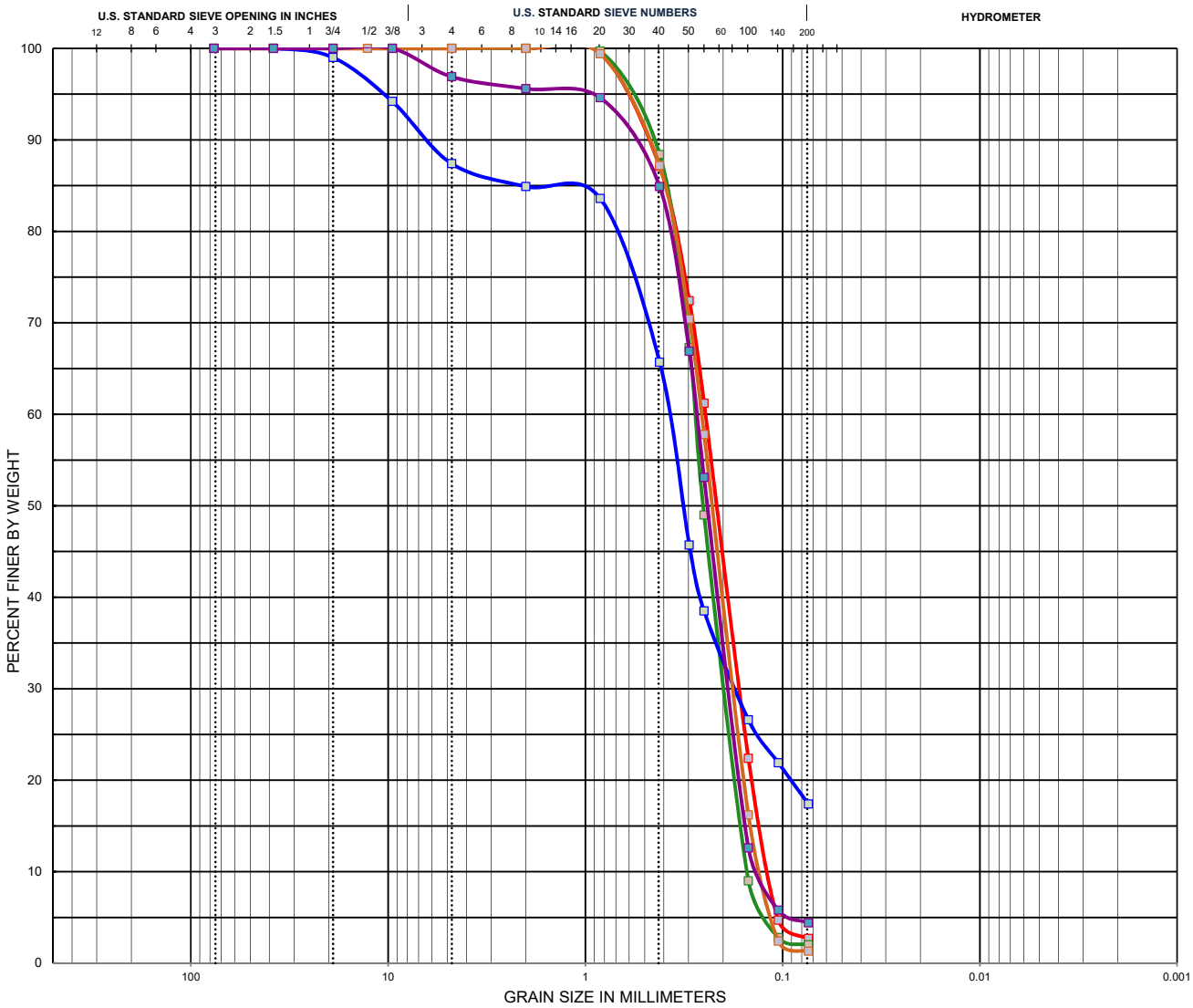

COBBLES	GRAVEL		SAND			SILT OR CLAY
	coarse	fine	coarse	medium	fine	

Boring No, Depth	Classification	LL	PL	PI	Cc	Cu
B-8 , 6-8	SP	NP	NP	NP	0.96	2.08
B-9 , 6-8	SP	NP	NP	NP	0.95	1.87
B-10 , 10-12	SM	NP	NP	NP	0	0
B-11 , 4-6	SP	NP	NP	NP	0.96	2
B-12 , 2-4	SP	NP	NP	NP	1.03	2.08

Boring No, Depth	D100	D60	D30	D10	% Cobble	%Gravel	%Sand	%Silt	%Clay
B-8 , 6-8	2	0.25	0.17	0.12	0	0	97.3	2.7	
B-9 , 6-8	2	0.28	0.2	0.15	0	0	98	2	
B-10 , 10-12	38.1	0.38	0.18	0	0	12.6	70	17.4	
B-11 , 4-6	2	0.26	0.18	0.13	0	0	98.7	1.3	
B-12 , 2-4	9.51	0.27	0.19	0.13	0	3.1	92.5	4.4	

In accordance with ASTM E 329 this report shall not be reproduced, except in full without the prior written approval of RADISE International

GRAIN SIZE DISTRIBUTION

CLIENT NAME Hazen and Sawyer, P.C. **PROJECT NAME** Fort Lauderdale-7 Neighborhoods - Hazen and Sawyer

PROJECT NUMBER 160605

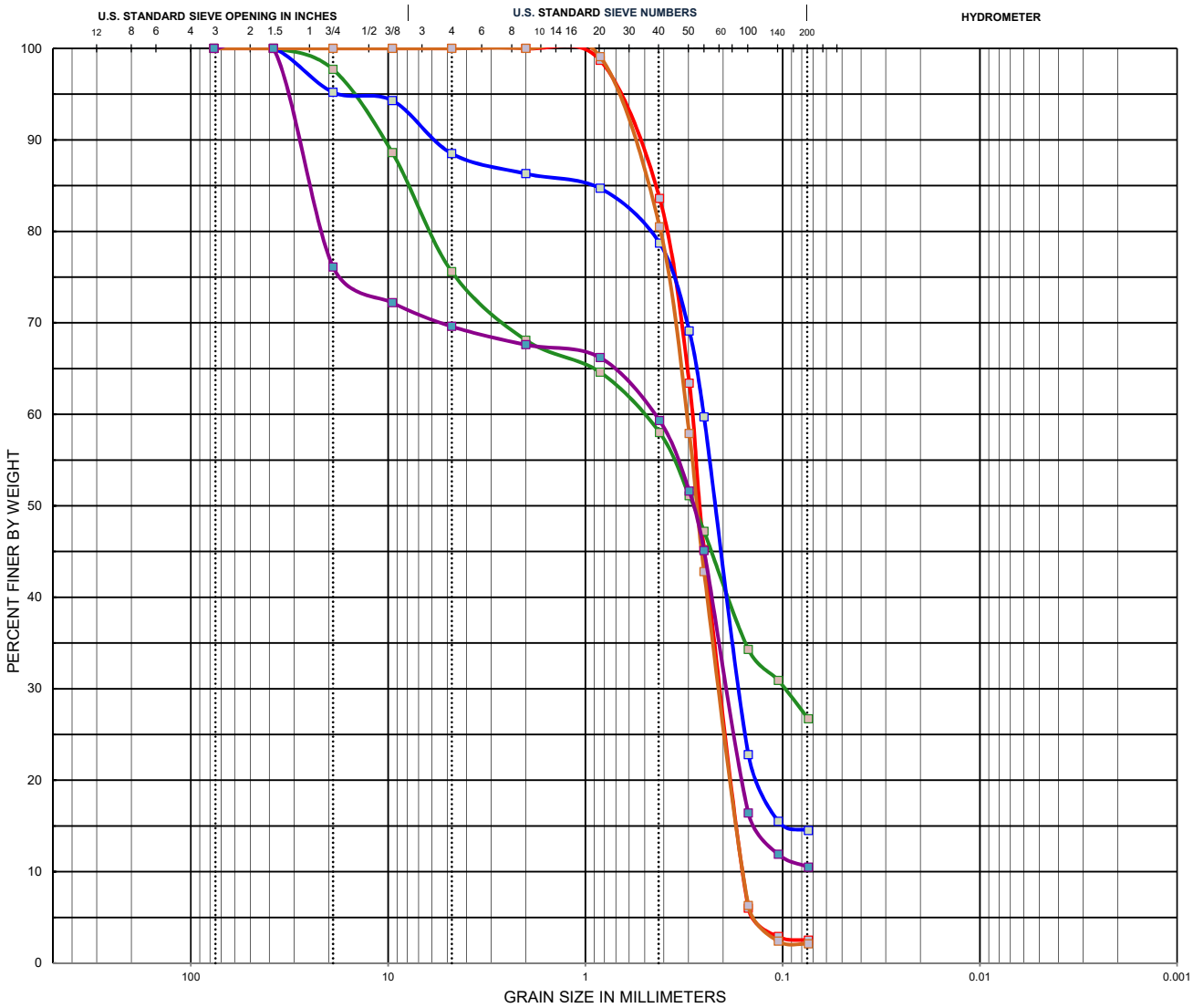

COBBLES	GRAVEL		SAND			SILT OR CLAY
	coarse	fine	coarse	medium	fine	

Boring No, Depth	Classification	LL	PL	PI	Cc	Cu
B-26 , 4-6	SP	NP	NP	NP	0.95	1.81
B-16 , 8-10	SM	NP	NP	NP	0	0
B-17 , 8-10	SM	NP	NP	NP	0	0
B-19 , 4-6	SP	NP	NP	NP	0.89	1.94
B-27 , 4-6	SP-SM	NP	NP	NP	0	0

Boring No, Depth	D100	D60	D30	D10	% Cobble	%Gravel	%Sand	%Silt	%Clay
B-26 , 4-6	2	0.29	0.21	0.16	0	0	97.5	2.5	
B-16 , 8-10	38.1	0.55	0.1	0	0	24.4	48.9	26.7	
B-17 , 8-10	38.1	0.25	0.17	0	0	11.5	74	14.5	
B-19 , 4-6	2	0.31	0.21	0.16	0	0	97.9	2.1	
B-27 , 4-6	38.1	0.46	0.2	0	0	30.4	59.1	10.5	

In accordance with ASTM E 329 this report shall not be reproduced, except in full without the prior written approval of RADISE International

GRAIN SIZE DISTRIBUTION

CLIENT NAME Hazen and Sawyer, P.C. **PROJECT NAME** Fort Lauderdale-7 Neighborhoods - Hazen and Sawyer

PROJECT NUMBER 160605

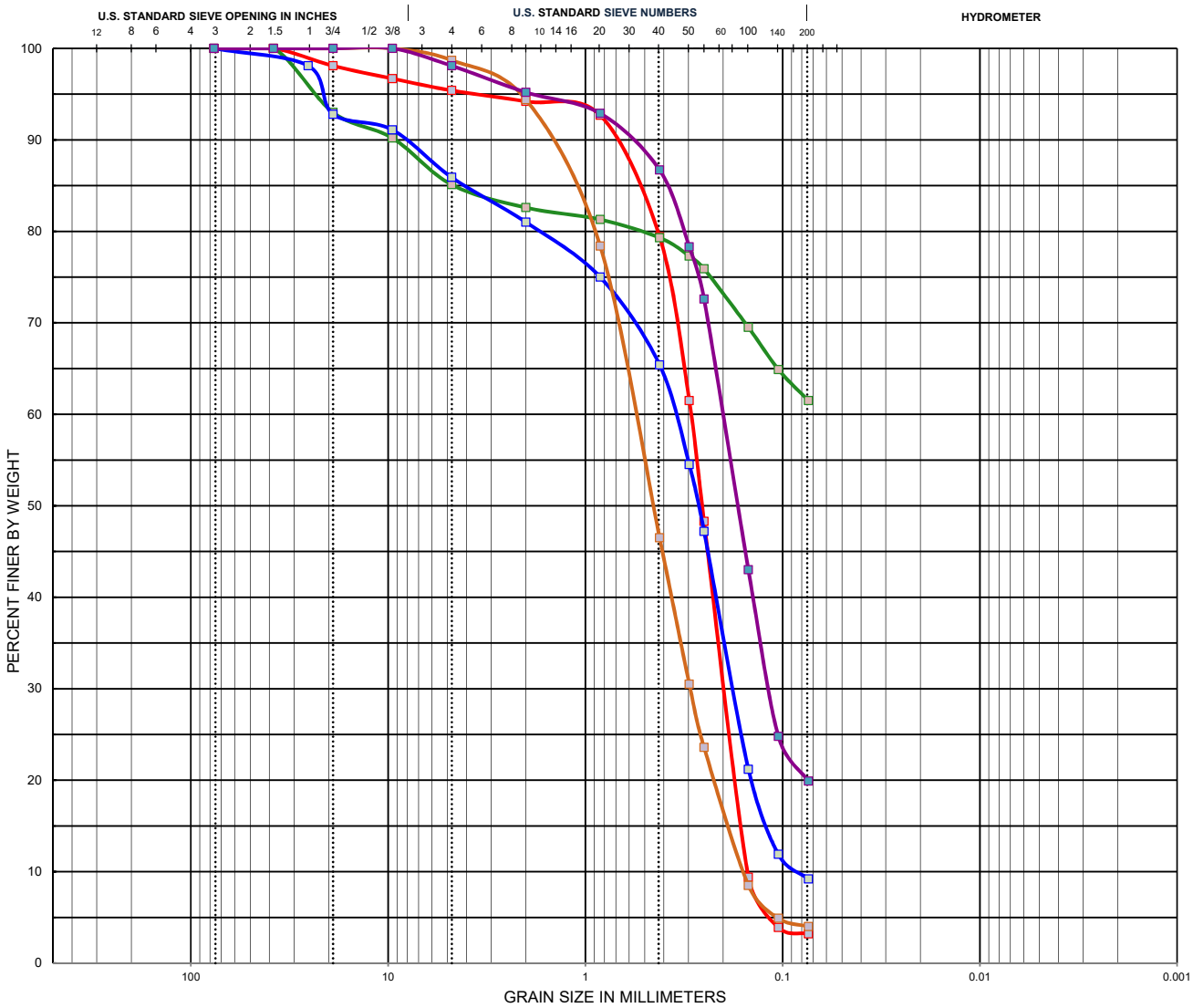

COBBLES	GRAVEL		SAND			SILT OR CLAY
	coarse	fine	coarse	medium	fine	

Boring No, Depth	Classification	LL	PL	PI	Cc	Cu
B-30 , 2-4	SP	NP	NP	NP	0.92	1.93
B-32 , 2-4	SM	NP	NP	NP	0	0
B-32 , 12-14	SP-SM	NP	NP	NP	1.12	4.5
B-33 , 2-4	SP	NP	NP	NP	0.88	3.75
B-34 , 8-10	SM	NP	NP	NP	0	0

Boring No, Depth	D100	D60	D30	D10	% Cobble	%Gravel	%Sand	%Silt	%Clay
B-30 , 2-4	38.1	0.29	0.2	0.15	0	4.6	92.2	3.2	
B-32 , 2-4	38.1	0	0	0	0	14.9	23.6	61.5	
B-32 , 12-14	76.2	0.36	0.18	0.08	0	14.1	76.7	9.2	
B-33 , 2-4	9.51	0.6	0.29	0.16	0	1.3	94.7	4	
B-34 , 8-10	9.51	0.21	0.12	0	0	1.9	78.2	19.9	

In accordance with ASTM E 329 this report shall not be reproduced, except in full without the prior written approval of RADISE International

TABLE A-2 - OPEN-HOLE EXFILTRATION TEST RESULTS
City of Ft. Lauderdale - 7 Neighborhoods Improvement
Broward County, Florida

Boring No.	Test Depth (ft.)	Diameter of the test hole (in.)	Diameter of the test hole, d (ft.)	Length of the exposed soil, L (ft.)	Depth to water table, H_2 (ft.)	Volume of Water (gal.)	Time (sec)	Stabilized flow rate, Q (cfs)	Saturated Hole Depth, Ds (ft)	Hydraulic Conductivity, K (cfs/ft^2 - ft head)
E-1	0 - 15	8	0.67	15	5.50	109.0	600	0.024	9.5	1.70E-04
E-2	0 - 15	8	0.67	15	5.50	53.4	600	0.012	9.5	8.32E-05
E-3	0 - 15	8	0.67	15	5.50	19.1	600	0.004	9.5	2.98E-05
E-4	0 - 15	8	0.67	15	6.00	64.0	600	0.014	9.0	9.33E-05
E-5	0 - 15	8	0.67	15	5.00	80.2	600	0.018	10.0	1.35E-04
E-6	0 - 15	8	0.67	15	5.00	39.7	600	0.009	10.0	6.67E-05
E-7	0 - 15	8	0.67	15	5.50	36.3	600	0.008	9.5	5.65E-05
E-8	0 - 15	8	0.67	15	5.25	93.6	600	0.021	9.8	1.51E-04
E-9	0 - 15	8	0.67	15	6.00	19.0	600	0.004	9.0	2.77E-05
E-10	0 - 15	8	0.67	15	5.00	48.7	600	0.011	10.0	8.18E-05
E-11	0 - 15	8	0.67	15	5.16	167.2	600	0.037	9.8	2.74E-04
E-12	0 - 15	8	0.67	15	3.58	54.1	600	0.012	11.4	1.20E-04
E-13	0 - 15	8	0.67	15	5.00	113.5	600	0.025	10.0	1.91E-04
E-14	0 - 15	8	0.67	15	4.00	126.5	600	0.028	11.0	2.56E-04
E-15	0 - 15	8	0.67	15	4.00	46.3	600	0.010	11.0	9.35E-05
E-16	0 - 15	8	0.67	15	7.00	50.8	600	0.011	8.0	6.62E-05
E-17	0 - 15	8	0.67	15	5.50	116.3	600	0.026	9.5	1.81E-04
E-18	0 - 15	8	0.67	15	4.00	168.9	600	0.038	11.0	3.41E-04
E-19	0 - 15	8	0.67	15	5.50	117.2	600	0.026	9.5	1.83E-04
E-20	0 - 15	8	0.67	15	5.41	254.8	600	0.057	9.6	4.02E-04
E-21	0 - 15	8	0.67	15	5.50	87.0	600	0.019	9.5	1.36E-04
E-22	0 - 15	8	0.67	15	6.33	134.8	600	0.030	8.7	1.89E-04
E-23	0 - 15	8	0.67	15	5.50	51.6	600	0.011	9.5	8.04E-05
E-24	0 - 15	8	0.67	15	6.00	110.3	600	0.025	9.0	1.61E-04
E-25	0 - 15	8	0.67	15	6.33	153.7	600	0.034	8.7	2.15E-04
E-26	0 - 15	8	0.67	15	3.50	16.9	600	0.004	11.5	3.83E-05
E-27	0 - 15	8	0.67	15	3.66	37.8	600	0.008	11.3	8.24E-05
E-28	0 - 15	8	0.67	15	3.50	21.2	600	0.005	11.5	4.80E-05

Notes:
* Equation from SFWMD Manual

$$K = \frac{4 * Q}{\pi * d * (2 * H_2^2 + 4 * H_2 * Ds + H_2 * d)}$$

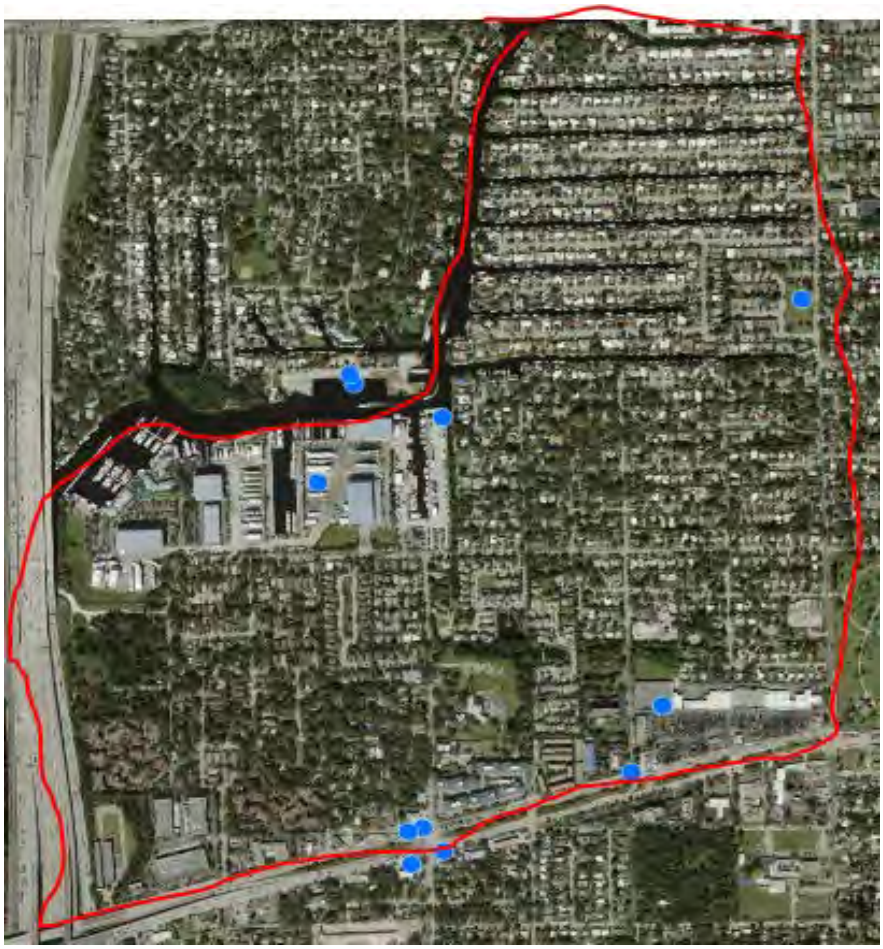

Contamination Site	Pollutant
Marina	Metals, Diesel
Gas Station	Petroleum
Marina	Arsenic, Metals
Marina	Petroleum
Nursery	Arsenic, Metals
Dry Cleaner	Chlorinated
FDEP	Petroleum
Gas Station	Mixed Product

EPA

WIFIA
PROGRAM

BORROWER GUIDE TO FEDERAL REQUIREMENTS

LAST UPDATED: OCTOBER 2021

DISCLAIMER

This document is intended as a guide for WIFIA borrowers to understand their general responsibilities for complying with federal requirements and is for informational purposes only. This document discusses a number of federal statutory and regulatory provisions and other federal requirements, but does not itself have legal effect, and is not a substitute for those provisions and any legally binding requirements that they may impose. It does not expressly or implicitly create, expand, or limit any legal rights, obligations, responsibilities, expectations or benefits to any person.

The information provided in this guide, including in any appendices, does not, and is not intended to, constitute legal advice. Users of this guide should not rely on this information to ensure compliance with federal requirements and should contact their legal counsel to obtain advice with respect to any particular legal matter, including such compliance. To the extent there is any inconsistency between this document and any legally binding federal requirements, the latter take precedence. EPA retains discretion to use or deviate from this document as appropriate.

This guide is subject to change without notice to address any new laws and regulations that impact the WIFIA program and its borrowers. The guide contains links to third-party websites. Such links are only for the convenience of the reader, and EPA does not recommend or endorse the content of the third-party sites.

VERSION HISTORY

Below documents substantive content updates to this Borrower Guide since its initial release.

October 2021:

- Added Table of Contents.
- Updated Environmental Authorities section, related to construction status of projects.
- Updated Economic and Miscellaneous Authorities section, related the Uniform Act and real property acquisition.
- Updated Labor Laws and Standards section, related to construction type generally used for water infrastructure projects.
- Updated hyperlinks to outside sources.

March 2021:

- Corrected hyperlinks to outside sources.

December 2020:

- Borrower Guide released.

TABLE OF CONTENTS

Disclaimer i

Version History ii

Introduction 1

Environmental Authorities 2

Economic and Miscellaneous Authorities 6

Debarment and Suspension and Prohibitions relating to violations of CWA and CAA with respect to Federal contracts, grants, or loans 6

New Restrictions on Lobbying 7

Uniform Relocation Assistance and Real Property Acquisition Policies Act 8

Demonstration Cities and Metropolitan Development Act 9

Drug-Free Workplace Act 9

Civil Rights, Nondiscrimination, and Equal Employment Opportunity Authorities 11

Age Discrimination Act, Section 504 of the Rehabilitation Act, and Title VI of the Civil Rights Act of 1964 11

Section 13 of the CWA 12

Equal Employment Opportunity 12

Participation by Disadvantaged Business Enterprises in Procurement under Environmental Protection Agency (EPA) Financial Assistance Agreements 13

American Iron and Steel (AIS) Requirement 15

Labor Laws and Standards 18

Latest Updates on Federal Requirements 22

Prohibition on Certain Telecommunication and Video Surveillance Services or Equipment 22

General Guidance on Compliance with Federal Requirements 24

Guiding principles for compliance 24

Co-Funding with Other Federal and State programs 25

State Laws and Regulations 25

Professional Service Contracts versus Construction Contracts 25

Appendix: WIFIA specifications Package 27

INTRODUCTION

Borrowers of loans provided under the Water Infrastructure Financing and Innovation Act (WIFIA), 33 U.S.C. § 3901 et seq., are required to comply with all federal laws and regulations. This document highlights important social and economic federal laws, regulations, and Executive Orders specifically listed in the WIFIA regulations (40 CFR Part 35 Subpart Q) as well as any relevant updates to the federal requirements. WIFIA borrowers have the prime responsibility for ensuring their staff and contractors comply with all federal requirements for a project. The project is subject to additional review of these federal requirements by the WIFIA Program during application processing and after loan execution.[1]

This guide provides an overview of the following federal requirements and identifies key borrower responsibilities and additional resources that may be helpful to the borrower for implementing each requirement.

[1] Although the WIFIA program provides oversight on loans issued to state infrastructure financing authorities, the program does not conduct federal requirements reviews during application processing or loan monitoring for these borrowers. These requirements are monitored and managed through the individual SRF programs.

ENVIRONMENTAL AUTHORITIES

OVERVIEW

The ***National Environmental Policy Act*** (NEPA) and various environmental crosscutting authorities fall under the Environmental Authorities listed in the WIFIA regulations at 40 CFR Part 35 Subpart Q.

The NEPA of 1969, 42 U.S.C. § 4321, *et seq*. mandates that federal agencies consider the effects of their actions, including programs, regulations, policies, and grant-funded specific projects, on the quality of the human environment. The issuance of a loan under the WIFIA program constitutes an action that triggers an environmental review of the project scope covered by the loan. The status of NEPA determinations for WIFIA's loans is listed on the WIFIA closed loan web page under the environmental review status column.

Prior to issuing a loan, the WIFIA program must review the environmental impacts of the project and make an independent determination under NEPA. The Council of Environmental Quality has established NEPA implementing regulations at 40 CFR part 1500 for meeting these requirements and the WIFIA program is guided by EPA's implementing regulations at 40 CFR Part 6. The WIFIA program's environmental review considers project impacts and mitigation measures across various environmental crosscutting authorities, including but not limited to:

- Archaeological and Historic Preservation Act, as amended (54 U.S.C. §§ 312501-312508)
- Archaeological Resources Protection Act (16 U.S.C. § 470AA-MM)
- Bald and Golden Eagle Protection Act (16 U.S.C. §§ 668-668C)
- Cleans Water Act (Section 404)
- Clean Air Act Conformity (42 U.S.C. § 7506(C))
- Coastal Zone Management Act (16 U.S.C. §§ 1451-1466)
- Coastal Barrier Resources Act (16 U.S.C. §§ 3501-3510)
- Endangered Species Act (16 U.S.C. §§ 1531-1599)
- Environmental Justice (Executive Order 12898)
- Essential Fish Habitat Consultation Process under the Magnuson-Stevens Fishery Conservation and Management Act (16 U.S.C. §§ 1801-1891)
- Farmland Protection Policy Act (7 U.S.C. §§ 4201-4209)
- Fish and Wildlife Coordination Act (16 U.S.C. § 661, *et seq.*)
- Flood Plain Management (Executive Order 11988, as amended by Executive Order 12148)
- Marine Mammal Protection Act (16 U.S.C. §§ 1361-1407)
- Migratory Bird Treaty Act (16 U.S.C. §§ 703-712)
- National Historic Preservation Act (NHPA), as amended (54 U.S.C. § 300101, *et seq*.)
- Native American Graves Protection and Repatriation Act (25 U.S.C. § 3001, *et seq.*)
- Protection of Wetlands (Executive Order 11990, as amended by Executive Order 12608)
- Rivers and Harbors Act (Section 10)
- Safe Drinking Water Act (42 U.S.C. § 300F-300J-26)
- Wild and Scenic Rivers Act (16 U.S.C. §§ 1271-1287)
- Wilderness Act (16 U.S.C. § 1131, *et seq.*)

WIFIA borrowers do not need to have a completed environmental review prior to submitting a letter of interest to the program or when applying for a WIFIA loan; however, borrowers can expect to provide available environmental assessments, consultations, or other documentation to support the WIFIA

program's review of environmental impacts and mitigation measures as part of application processing. WIFIA projects must comply with all environmental cross-cutting authorities. Compliance with cross-cutting authorities is reviewed and documented by the WIFIA program. The WIFIA program may conduct additional consultations related to federal cross-cutting authorities, as necessary for the environmental review. Compliance with the environmental cross-cutting authorities is particularly important for projects where construction is already in progress or will be starting prior to loan close. Experience has shown that successful and timely completion of consultations under Section 106 of the National Historic Preservation Act and Section 7 of the Endangered Species Act can be difficult when initiated too late in the project schedule. To document the completion of the NEPA environmental review, the WIFIA program will issue one of the following determinations for the loan:

- **Categorical Exclusion (CATEX)**: EPA's list of actions that may be categorically excluded is available at 40 CFR 6.204. The issuance of a CATEX does not require a public comment period.
- **Finding of No Significant Impact (FONSI) under WIFIA's Programmatic Environmental Assessment (PEA)**: The WIFIA program has analyzed the typical potential environmental impacts related to the issuance of credit assistance under WIFIA in the PEA and associated FONSI, related to certain WIFIA water and wastewater projects eligible under 33 U.S.C. § 3905 and described in Section 4 of the PEA. Based on information supplied by the WIFIA borrower and the borrower responses to the WIFIA PEA Questionnaire (included as an appendix to the WIFIA application), the WIFIA program will evaluate the applicability of the project under the PEA. An additional 30-day public comment period is not required for projects that fall under the PEA.
- **FONSI under Environmental Assessment (EA)**: If the project does not qualify for a CATEX or the PEA because the environmental impacts or the significance of the impacts are unknown, the WIFIA borrower will be asked to submit an environmental information document (EID) with a scope and level of detail commensurate with the magnitude and significance of the project. If deemed sufficient and acceptable by the WIFIA program, the borrower may submit a draft EA and supporting documents in lieu of an EID, or the WIFIA program will draft an EA. A FONSI determination under an EA is subject to a 30-day public comment period before it is finalized. EPA's NEPA implementing regulations for environmental assessments are found at 40 CFR 6.205.
- **Environmental Impact Statement (EIS)**: If significant impacts are anticipated for the project during the environmental assessment, the WIFIA borrower will partner with the WIFIA program to assist in the preparation of an EIS describing the environmental impacts and reasonable alternatives. EPA may enter into a third-party agreement with the applicant to hire a consulting firm to prepare the EIS. A draft EIS is subject to a 45-day public comment period and the final EIS is subject to a 30-day waiting period before it is finalized and a record of decision (ROD) is issued for the project. EPA's NEPA implementing regulations for environmental impact statements are found at 40 CFR 6.207.

WHAT TO EXPECT

The WIFIA program has the responsibility to conduct an environmental review and issue a determination for the project scope covered by a WIFIA loan and to ensure any monitoring requirements are being implemented by the WIFIA borrower prior to and through construction. The WIFIA program must conduct

an environmental review prior to issuance of a WIFIA loan. When the WIFIA project is co-funded with other federal or state programs, the WIFIA program may work collaboratively with co-funding agencies to ensure compliance with environmental cross-cutting authorities. WIFIA borrowers should clearly communicate project construction schedules to ensure the environmental compliance requirements can be or have been met prior to conducting ground-disturbing activities or activities that may diminish or alter the character of historic properties. Components of the WIFIA project that do not or cannot comply with environmental cross-cutting authorities may be excluded from the WIFIA project. As part of its compliance monitoring activities, the WIFIA program will conduct periodic document reviews and site walk-throughs during project construction, where applicable, to ensure specific requirements outlined in the WIFIA environmental documentation are met.

Prospective borrowers are not required to submit environmental documentation or findings when submitting their letters of interest (LOI). However, as part of the WIFIA application, borrowers can expect to:

- ✓ Identify any consultations with cross-cutting agencies that have already been completed or are ongoing.
- ✓ Discuss the environmental review with the WIFIA program prior to submittal of the application. If it appears that the project may not qualify for a CATEX, the WIFIA program will request that the borrower submit a completed PEA Questionnaire along with the relevant supporting materials.

After the application is submitted, WIFIA applicants may be asked to:

- ✓ Provide additional materials relevant to the project environmental review, including project description and location, project maps, any reports, assessments, or consultations conducted for the project, NEPA determinations by other federal agencies or State Revolving Fund (SRF) programs, or other relevant documentation to support the environmental review.
- ✓ If an EA or EIS is required, consult with the WIFIA program to determine the scope and level of detail for the documentation, indicate any public meetings or hearings required as part of the process, and support the WIFIA program in responding to comments if the NEPA determination is subject to a public comment period.
- ✓ Verify accuracy of environmental review documents prepared by the WIFIA program and provided to the applicant at the completion of the environmental review. The signatory of the WIFIA application, or equivalent authority, must sign the Environmental Review Verification Memorandum to confirm the applicant's concurrence with the environmental documentation.

Environmental monitoring and reporting requirements prior to and during project construction will be outlined in the environmental review documents or the loan agreement. The WIFIA program has the responsibility to conduct checks on the borrower's environmental requirements during compliance monitoring activities.

Key borrower responsibilities for implementation include:

- ✓ Execute the requirements outlined in the environmental review documents or specified in the loan agreement. These requirements vary based on the scope of the project and may include

activities like submittal of approved environmental permits; use of construction methods to mitigate potential environmental impacts; environmental training for employees; submittal of biological assessments; or other requirements identified through consultations with other federal agencies.

- ✓ Notify the WIFIA program if the scope of activities under the existing environmental determination is modified and provide supporting documentation for the WIFIA program to initiate additional federal agency consultations, as needed, to maintain the borrower's environmental compliance with the project.

RESOURCES

- CEQ Regulations for Implementing NEPA (40 CFR part 1500)
- EPA Procedures for Implementing NEPA and Assessing Environmental Effects (40 CFR Part 6)
- PEA for the WIFIA Program
- WIFIA PEA Questionnaires for WIFIA Credit Assistance Projects and SRF Programs

ECONOMIC AND MISCELLANEOUS AUTHORITIES

The following federal requirements fall under the Economic and Miscellaneous Authorities listed in the WIFIA regulations at 40 CFR Part 35 Subpart Q.

DEBARMENT AND SUSPENSION AND PROHIBITIONS RELATING TO VIOLATIONS OF CWA AND CAA WITH RESPECT TO FEDERAL CONTRACTS, GRANTS, OR LOANS

Executive Order 12549 provides for a governmentwide system for debarment and suspension. A person or business who is debarred or suspended is excluded from activities in which grants, cooperative agreements, contracts of assistance, loans, and loan guarantees are being used to fund the activity. Borrowers must ensure their contractors and subcontractors are not suspended or debarred prior to issuing contracts. For prime contractors, registration under the governmentwide System for Award Management (SAM) is required and borrowers must check their registration under SAM. For lower tier contracts (i.e., subcontracts), OMB guidance under 2 CFR Part 180 Subpart C allows the borrower to verify whether subcontractors are debarred or suspended from government-funded activities using one of three options: (1) check subcontractor status on SAM; (2) collect a certification from the subcontractor; or (3) add a clause or condition to the covered transaction with the subcontractor.

Additionally, Section 306 of the Clean Air Act (CAA) and section 508 of the Clean Water Act (CWA), as implemented by Executive Order 11738 (1973), prohibit performance of Federal assistance agreements at facilities disqualified due to certain violations of the CAA or CWA. As described in the respective CAA and CWA sections, a person or entity who has been convicted of a criminal offense or has a serious pattern of civil violations may be barred from receiving Federal government contracts, loans, and grants. Statutory debarments occur by operation of law following criminal conviction under CWA (Section 508) or CAA (Section 306). The ineligibility lasts until the Debarring Official certifies that the condition giving rise to conviction has been corrected.

WHAT TO EXPECT

The WIFIA program has the responsibility to check that its borrowers are not debarred or suspended from receiving federal funds.

In its LOI submittal, WIFIA prospective borrowers are asked to:

- ✓ Disclose to EPA if they are currently debarred or suspended; proposed for debarment or suspension; or indicted, convicted, or had a civil judgment rendered against it for any of the offenses listed in the regulations governing debarment and suspension at 2 CFR Part 180 and Part 1532; or declared ineligible or excluded from participating in federal contracts or contracts paid for with federal funds. This disclosure is completed as part of the certification submitted with the LOI.

During application processing, WIFIA applicants are asked to:

- ✓ Disclose their debarment and suspension status as part of the WIFIA application and prior to loan closing.

For all contracts used on the project, WIFIA borrowers are expected to:

- ✓ Communicate to potential contractors the requirement to certify that the contractor is not debarred or suspended and to require their subcontractors to similarly certify. This is generally provided in bid advertisements and executed contracts. Although no specific contract language is required, sample contract language in the WIFIA specifications package is available for use by the borrower (see Resources below).

- ✓ Verify that the contractor and its subcontractors are not debarred or suspended. For prime contractors, access SAM to verify the awarded prime contractor is not disqualified or excluded. For lower tier contracts, ensure the prime contractor has verified their subcontractors are not suspended or debarred either by (1) checking exclusions in SAM, (2) collecting a signed certification from the subcontractor, or (3) including a clause or condition for the covered transaction with the subcontractor.

RESOURCES

- Debarment and Suspension (EO 12549)
- Providing for administration of the Clean Air Act and the Federal Water Pollution Control Act with respect to Federal contracts, grants, or loans (EO 11738)
- OMB Guidelines to Agencies on Governmentwide Debarment and Suspension (2 CFR Part 180)
- Non-procurement Debarment and Suspension (2 CFR part 1532)
- System for Award Management (SAM)
- Sample Contract Language in WIFIA Specifications Package

NEW RESTRICTIONS ON LOBBYING

Recipients of federal grants, cooperative agreements, contracts, and loans are prohibited by 31 U.S.C. § 1352 from using federal funds to pay any person for influencing or attempting to influence any officer or employee of an agency, a member of Congress, an officer or employee of Congress, or an employee of a member of Congress with respect to the award, continuation, renewal, amendment, or modification of any of these instruments. This requirement also applies to the WIFIA program, which follows the EPA implementing regulations on lobbying restrictions prescribed at 40 CFR part 34.

WIFIA borrowers are required to certify that (1) they have not made, and will not make, such a prohibited payment, (2) they will be responsible for reporting the use of non-federal funds for such purposes, and (3) they will include these requirements in subsequent contracts and subcontracts that exceed $100,000 and obtain necessary certifications from those entities.

WHAT TO EXPECT

The WIFIA program has the responsibility to check that its borrowers are not making prohibited payments related to lobbying using federal funds.

During application processing and prior to issuing a loan, WIFIA applicants are asked to:

- ✓ Provide completed "Certification Regarding Lobbying" (EPA Form 6600-06) form and if applicable, the "Disclosure of Lobbying Activities" (SF-LLL) form, which are included in the WIFIA Application. Use the WIFIA Loan ID as the EPA Project Control Number.

- ✓ Provide evidence of borrower communication to contractors and subcontractors of the need to also comply with restrictions on lobbying. This is generally provided in bid advertisements and executed contracts. Although no specific contract language is required, sample contract language in the WIFIA specifications package is available for use by the borrower (see Resources below).

Once a WIFIA loan is executed, key borrower responsibilities for implementation include:

- ✓ Continue to comply with and communiciate to contractors and subcontractors of the need to comply with restrictions on lobbying. The WIFIA program will check advertised bids and executed construction contracts, which are a general reporting requirement of the loan, for this type of communication to contractors.

RESOURCES

- Limitation on use of appropriated funds to influence certain Federal contracting and financial transactions (31 U.S.C 1352)
- New Restrictions on Lobbying (40 CFR part 34)
- Certification regarding lobbying (EPA Form 6600-06)
- Disclosure of Lobbying Activities (SF-LLL)
- Sample Contract Language in WIFIA Specifications Package

UNIFORM RELOCATION ASSISTANCE AND REAL PROPERTY ACQUISITION POLICIES ACT

This authority applies to WIFIA borrowers who have acquired or will acquire real property, whether temporary or permanent, for the purpose of completing the WIFIA project. The acquisition itself does not need to be federally funded. If federal funds are used in any phase of the program or project, this statute applies.

The Uniform Relocation Assistance and Real Property Acquisition Policies Act (URA), 42 U.S.C 61, establishes a uniform policy for just compensation of acquired real property and for fair and equitable treatment of persons who are displaced from their homes, farms, or businesses to make way for federal or federally assisted projects. It provides basic guidelines for negotiating the acquisition of real property by the federal government. The URA also requires agencies to reimburse individuals for actual and reasonable expenses incident to relocation, such as moving costs, direct loss of tangible personal property associated with moving or discontinuing a business, and expenses involved in searching for a replacement home or business site. 49 CFR Part 24 is the government-wide regulation that implements the URA.

WHAT TO EXPECT

The WIFIA program has the responsibility to check that its borrowers comply with the requirements of the URA if land acquisition is relevant to the project.

During application processing and once the WIFIA loan is executed, WIFIA borrowers are asked to:

- ✓ Disclose to the WIFIA program if land acquisition has occurred or will occur.

- ✓ Certify that the acquisition complies with or will comply with the URA. This disclosure is completed as part of the certification submitted with the LOI and loan application and as part of disbursement requests to the WIFIA program.

- ✓ Provide evidence that URA requirements are met, if requested, which may include initial notification to the landowner, appraisal and appraisal reviews, and offer of just compensation related to the acquisition.

RESOURCES

- URA implementing regulations for Department of Transportation, incorporated by reference in EPA regulations (49 CFR Part 24)
- Guidance on Acquisition and Appraisal: Acquiring Real Property for Federal and Federal-Aid Programs and Projects, Federal Highway Administration Office of Real Estate Services
- Federal-Aid Essentials for Local Public Agencies: Right of Way Requirements, Federal Highway Administration

DEMONSTRATION CITIES AND METROPOLITAN DEVELOPMENT ACT

Executive Order 12372 and Section 204 of the Demonstration Cities and Metropolitan Development Act, 42 U.S.C 3301 *et seq.*, aim to foster an intergovernmental partnership between federal, state, tribal, and local governments. The executive order encourages federal coordination with local officials on the planning and construction of public facilities within their jurisdiction.

WHAT TO EXPECT

The WIFIA program is not identified as a program requiring intergovernmental review under this Executive Order.

The WIFIA program does not conduct compliance monitoring activities related to this Act after loan execution.

RESOURCES

- Intergovernmental Review of Federal Programs (Executive Order 12372)
- EPA Financial Assistance Programs Subject to Executive Order 12372

DRUG-FREE WORKPLACE ACT

Under the Drug-free Workplace Act of 1988, 41 U.S.C. § 8101 *et seq.*, federal contractors or any program receiving federal grants is required to establish a drug-free workplace policy. Governmentwide implementation of the Act is prescribed at 2 CFR Part 182, Subparts A through F.

WHAT TO EXPECT

The WIFIA program is a federal loan program and therefore is not covered by this Act.

The WIFIA program does not conduct compliance monitoring activities related to this Act after loan execution.

RESOURCES

- Drug-free workplace programs, Substance Abuse and Mental Health Services Administration
- Governmentwide requirements for Drug-free Workplace (2 CFR Part 182)

CIVIL RIGHTS, NONDISCRIMINATION, AND EQUAL EMPLOYMENT OPPORTUNITY AUTHORITIES

The following federal requirements fall under the Civil Rights, Nondiscrimination, and Equal Employment Opportunity Authorities listed in the WIFIA regulations at 40 CFR Part 35 Subpart Q.

AGE DISCRIMINATION ACT, SECTION 504 OF THE REHABILITATION ACT, AND TITLE VI OF THE CIVIL RIGHTS ACT OF 1964

Three important laws prohibit discrimination in the provision of services or benefits, on the basis of race, color, national origin, sex, handicap or age, in programs or activities receiving federal financial assistance. These laws are:

- Title VI of the Civil Rights Act of 1964, 42 U.S.C. § 2000d *et seq.*, as amended, states that "No person in the United States shall, on the ground of race, color, or national origin, be excluded from participation in, be denied the benefits of, or be subjected to discrimination under any program or activity receiving federal financial assistance."
- Section 504 of the Rehabilitation Act of 1973, 29 U.S.C. § 794 *et seq.*, as amended and supplemented by Executive Orders 11914 and 11250, states that "(n)o otherwise qualified individual with a disability in the United States…shall, solely by reason of his or her disability, be excluded from participation in, be denied the benefits of, or be subject to discrimination under any program or activity receiving federal financial assistance…," and
- The Age Discrimination Act of 1975, 42 U.S.C. § 6101 *et seq.*, as amended, states that "(n)o person in the United States shall, on the basis of age, be excluded from participation in, be denied the benefits of, or be subject to discrimination under any program or activity receiving financial assistance…"

Borrower compliance with these laws is not limited to the project funded by the WIFIA program. These laws apply to the WIFIA borrower and its operations in its entirety.

WHAT TO EXPECT

The WIFIA program has the responsibility to check that its borrowers are complying with civil rights laws and are developing projects, programs, and activities on a non-discriminatory basis.

During application processing and prior to issuing a loan, WIFIA applicants are asked to:

- ✓ Provide a completed "Pre-Award Compliance Review Report" (EPA Form 4700-4), which is included in the WIFIA Application, and if requested, additional information on any outstanding civil actions against the applicant.

- ✓ Provide evidence of communication to contractors and subcontractors of the need to also comply with civil rights laws. This is generally provided in bid advertisements and executed contracts. Although no specific contract language is required, sample contract language in the WIFIA specifications package is available for use by the applicant (see Resources below).

Once a WIFIA loan is executed, key borrower responsibilities for implementation include:

- ✓ Continue to comply with and communiciate to contractors and subcontractors of the need to comply with civil rights laws and regulations. The WIFIA program will check advertised bids and executed construction contracts, which are a general reporting requirement of the loan, for this type of communication to contractors.
- ✓ Notify the WIFIA program of new civil suits that have been filed against the borrower that may have material adverse effect.

RESOURCES

- Civil Rights Pre-Award Compliance Review Report (EPA Form 4700-4)
- Nondiscrimination on the Basis of Sex in Education Programs or Activities Receiving Federal Financial Assistance (40 CFR Part 5)
- Nondiscrimination in Programs or Activities Receiving Federal Assistance from the Environmental Protection Agency (40 CFR Part 7)
- Sample Contract Language in WIFIA Specifications Package

SECTION 13 OF THE CWA

As codified in 42 U.S.C. § 1251, Section 13 provides that "No person in the United States shall on the ground of sex be excluded from participation in, be denied the benefits of, or be subjected to discrimination under any program or activity receiving Federal financial assistance…" EPA implementing regulations for this provision of the CWA is prescribed in 40 CFR part 7 and enforced similarly to those already established for racial and other discrimination under Title VI of the Civil Rights Act of 1964.

WHAT TO EXPECT

The WIFIA program has similar borrower expectations outlined in *Age Discrimination Act, Section 504 of the Rehabilitation Act, and Title VI of the Civil Rights Act of 1964* for implementing CWA Section 13.

RESOURCES

- Nondiscrimination in Programs or Activities Receiving Federal Assistance from the Environmental Protection Agency (40 CFR Part 7)

EQUAL EMPLOYMENT OPPORTUNITY

Through a series of Executive Orders, and a decision by the Equal Employment Opportunity Commission, the federal government established a national policy related to discrimination based on race, color, sex, religion, and national origin to enhance hiring, training, and promotion opportunities for minorities and women in construction programs financed, in part, by federal dollars.

Chief among these directives is Executive Order 11246, which requires all federal contracting agencies to include certain nondiscrimination and "affirmative action" provisions in all contracts and to require the recipients of federal contracts to include these provisions in subcontracts. The provisions apply to WIFIA borrowers, contractors and subcontractors who receive more than $10,000 in federal dollars a year and commit these entities to maintaining a policy of non-discrimination in the treatment of employees, to

make this policy known to employees, and to recruit, hire, and train employees without regard to race, color, sex, religion, or national origin.

Section 301 of Executive Order 11246 requires that WIFIA borrowers undertake and agree to incorporate into contracts and subcontracts specific language outlining the eight principals and directives found in Section 202 of the Executive Order.

Implementing guidelines can be found in the Department of Labor's regulations at 41 CFR Part 60. Compliance with Executive order 11246 is based on implementation of the Equal Opportunity Clause, and specific affirmative action obligations required by the Standard Federal Equal Employment Opportunity Construction Contract Specifications, as set forth in 41 CFR Part 60-4.

WHAT TO EXPECT

The WIFIA program has the responsibility to check that its borrowers are complying with laws and regulations related to Equal Employment Opportunity.

During application processing and once the WIFIA loan is executed, WIFIA borrowers are asked to:

- ✓ Provide executed construction contracts (active and completed) that include specified EEO language. EEO law require specific language from Section 202 of Executive Order 11246 be included in bid documents and contracts. The specific language is included in the WIFIA specifications package, which is available for use by the borrower (see Resources below).
- ✓ In bid solicitations, provide an additional "Notice of Requirement for Affirmative Action to Ensure Equal Employment Opportunity" as described at 41 CFR Part 60-4. The specific language is included in the WIFIA specifications package.
- ✓ Prominently post "Equal Opportunity is the Law" posters where it is accessible to all applicants for employment, employees, contractors, and subcontractors.
- ✓ Notify the Department of Labor's Office of Federal Contract Compliance Programs within 10 working days of award of a construction contract or subcontract in excess of $10,000.

RESOURCES

- Equal Employment Opportunity posters
- Executive Order 11246 and amendments
- DOL Construction Contract Technical Assistance Guide
- DOL Construction Contract Award Notification
- Sample Contract Language in WIFIA Specifications Package

PARTICIPATION BY DISADVANTAGED BUSINESS ENTERPRISES IN PROCUREMENT UNDER ENVIRONMENTAL PROTECTION AGENCY (EPA) FINANCIAL ASSISTANCE AGREEMENTS

The Disadvantaged Business Enterprise (DBE) Program is an EPA outreach, education, and goal program designed to increase and encourage the utilization and participation of DBEs in procurements funded by EPA assistance programs (73 FR 15904). The implementing regulations can be found at 40 CFR Part 33.

WIFIA borrowers are required to seek and encouraged to use small, minority and women-owned businesses for their procurement needs using EPA's six good faith efforts when contracting. The borrower must also ensure that its prime contractor(s) follow the same rules when subcontracting. The six good faith efforts include:

- Ensure DBEs are made aware of contracting opportunities to the fullest extent practicable through outreach and recruitment activities. For Indian Tribal, State, and Local Government recipients, this will include placing DBEs on solicitation lists and soliciting them whenever they are potential sources.
- Make information on forthcoming opportunities available to DBEs, arrange time frames for contracts, and establish delivery schedules, where the requirements permit, in a way that encourages and facilitates participation by DBEs in the competitive process. This includes, whenever possible, posting solicitations for bids or proposals for a minimum of 30 calendar days before the bid or proposal closing date.
- Consider in the contracting process whether firms competing for large contracts could subcontract with DBEs. For Indian Tribal, State, and Local Government recipients, this will include dividing total requirements when economically feasible into smaller tasks or quantities to permit maximum participation by DBEs in the competitive process.
- Encourage contracting with a consortium of DBEs when a contract is too large for one of these firms to handle individually.
- Use the services and assistance of the SBA and the Minority Business Development Agency of the Department of Commerce.
- If the prime contractor awards subcontracts, require the prime contractor to take the steps in items 1 through 5.

There are no specific requirements for implementing each of the efforts as long as the effort is shown. Aside from these efforts, WIFIA borrowers do not have other administrative or reporting requirements of the DBE program under a WIFIA loan.

WHAT TO EXPECT

In implementing EPA's DBE program, WIFIA borrowers are asked to:

- ✓ Apply the six good faith efforts when in the process of seeking a prime contractor and ensure that its prime contractors apply the six good faith efforts when in the process of seeking subcontractors.
- ✓ Maintain proper records demonstrating that the six good faith efforts were applied during contract procurement.

RESOURCES

- DBE Implementing regulations (40 CFR part 33)
- DBE Program resources and fact sheets
- Sample Contract Language in WIFIA Specifications Package

AMERICAN IRON AND STEEL (AIS) REQUIREMENT

OVERVIEW

This requirement is specified in the WIFIA statute at 33 U.S.C. § 3914 and implementation of the federal requirement mirrors Clean Water and Drinking Water SRF programs.

WIFIA borrowers must install iron and steel products that are produced in the U.S. for the project. Products covered under the AIS requirement include:

- Lined or unlined pipes and fittings
- Manhole covers and other municipal castings
- Hydrants
- Tanks
- Flanges
- Pipe clamps and restraints
- Valves
- Structural steel
- Reinforced precast concrete
- Construction materials

If the listed products are permanently incorporated into the project and are primarily iron and steel material, then borrowers should obtain and keep record of the manufacturer's certification of AIS compliance for that product. If a product does not fall within one of the listed product categories, it does not need to comply with the AIS requirements.

The WIFIA statute allows EPA to grant project waivers in specific circumstances: (1) if the requirement is inconsistent with the public interest; (2) if the products are not produced in the United States in sufficient and reasonably available quantities and of a satisfactory quality; or (3) if the products will increase the cost of the project by 25% or more. **WIFIA borrowers can seek guidance from the program on waivers at any phase in project design and implementation to discuss borrower-specific circumstances and explore options to ensure compliance.**

Product availability waiver requests are most common because not all items covered under the AIS requirement may be produced in the U.S. Borrowers should notify the WIFIA program when product availability issues are identified and prior to product procurement and installation to ensure that the project maintains compliance with the AIS requirement. Although not required, identifying products during project design can help the borrower assess market availability and initiate a timely waiver process, where needed. The waiver process involves:

1. Independent product research. Before availability waivers are considered, the WIFIA program will conduct independent market review based on the borrower's technical specifications of the product.
2. Borrower assessment. The WIFIA program will notify the borrower of the results and confirm unavailability of the products or identify additional domestically available options for the borrower to assess against their project requirements. If there are feasible options, no further steps are taken.

3. Preparation and submission of waiver request package. If there are no feasible options, borrowers will prepare a waiver request package. The WIFIA program reviews the request for adequacy and submits the package for review and approval on the borrower's behalf.
4. Public comment period. Waiver requests are subject to a 15-day comment period and will be posted on the AIS webpage under Waiver Requests Received by EPA.
5. Approval and notification. Once all comments have been addressed, an approval package will be routed for review and approval through the Office of Water management team. The WIFIA program will post the approved waiver on the AIS webpage under Approved Project Waivers and notify the borrower.

Waivers should only be sought when all avenues of procuring AIS-compliant products have been exhausted. In many cases, a borrower may find that an availability waiver is not needed.

Public interest and cost waivers are less common. Borrowers should initiate further discussions with the WIFIA program if they believe their project could qualify for a public interest or cost waiver. The waiver process is the same for these waivers except product research and assessment (Steps 1 and 2) do not apply.

There are also national waivers that are immediately available for borrower use and do not require additional approval. The National De Minimis Waiver can be used at the borrower's discretion for incidental and low-cost items; it is ultimately the borrower who decides which items to include under this national waiver. If there is any uncertainty, seek assistance from the WIFIA program.

WIFIA cannot close a loan with previously incurred construction costs that are not compliant with the AIS requirement.

WHAT TO EXPECT

The WIFIA program has the responsibility to check that its borrowers understand the AIS requirements and that those requirements are being properly implemented for the entire project. WIFIA will conduct periodic document reviews and site walk-throughs during project construction to check AIS implementation as part of its compliance monitoring activities.

During application processing, WIFIA applicants may be asked to:

- ✓ Provide evidence of communication on AIS requirements to contractors and subcontractors. Although not statutorily required, applicants can easily achieve this by including notification in advertised bids and executed contracts. Sample contract language in the WIFIA specifications package is available for use by the borrower (see Resources below).
- ✓ If a project has not yet executed contracts, provide a plan for communication on AIS requirements to contractors and subcontractors.
- ✓ If the project includes previously incurred costs for construction activities, provide additional documentation to help the WIFIA program check that incurred costs are compliant with this requirement. This request may include: (1) a list of iron or steel products purchased and installed; (2) a sample of AIS certifications for those items; (3) related project waivers; and/or (4) results of a third-party AIS audit.

As a WIFIA program check on compliance, WIFIA borrowers are asked to periodically submit documentation to demonstrate continued compliance with the AIS requirement. Key borrower responsibilities for implementation include:

- ✓ Communicate AIS requirements to contractors and ensure contractors are communicating the requirements to its subcontractors. This is generally included in advertised bids and executed contracts that are a general reporting requirement of the loan and checked by WIFIA. If communication is not included in the contract documents, provide additional evidence that communication has taken place.
- ✓ Submit draft or executed prime construction contracts for WIFIA review to ensure that adequate compliance language is included. The WIFIA program does not generally review subcontracts unless there is cause for further review.
- ✓ Identify products that must comply with AIS requirements and determine whether they can be procured domestically. Communicate to the WIFIA program when products cannot be procured domestically to initiate the program's independent market review and determine whether there is a need for an availability waiver. Submit additional documentation, such as technical specifications and product information, to support the WIFIA program's review and approval process, as needed.
- ✓ Maintain up-to-date records or frequently check with prime contractors on AIS certifications for products purchased and installed on the project. This can help the borrower prevent non-compliant products from being permanently incorporated into the project and triggering a non-compliance event. The WIFIA Program requires AIS documentation to be maintained for three years after project completion. **The key to borrower compliance is collecting adequate AIS documentation for installed products that are covered by the requirement.**
- ✓ Report any issue with noncompliance to the WIFIA program based on the borrower's review of purchased and installed products on contracts and subcontracts that must comply with the AIS requirement.

RESOURCES

- AIS Implementation Memoranda (four documents)
- National Waivers, including National De Minimis Waiver. See also AIS Online Webinar on De Minimis, June 2020
- Project Waiver Request Checklist
- Sample Contract Language in WIFIA Specifications Package
- Sample Certification Letter (available in the AIS Implementation Memorandum, dated March 2014). See also AIS Online Webinar on AIS Certification Letters, July 2020.

LABOR LAWS AND STANDARDS

OVERVIEW

This requirement is included in the WIFIA statute at 33 U.S.C. § 3909(e) by reference to Section 513 of the Federal Water Pollution Control Act (33 U.S.C. § 1372) and primarily covers requirements under the ***Davis-Bacon and Related Acts*** and the ***Contract Work Hours Safety Standards Act***. Implementation of the federal requirements under these Acts are consistent with guidance provided to Clean Water and Drinking Water State Revolving Loan Programs.

Borrowers must comply with federal prevailing wage laws, commonly referred to as Davis-Bacon. While the Davis-Bacon Act itself only requires compliance for federal contracting, WIFIA falls under "related acts" that are also subject to Davis-Bacon requirements. For all prime contracts above the $2,000 threshold, borrowers must enclose specific Davis-Bacon language into the prime contracts and ensure the prime contractor includes the same language in all associated subcontracts. Contracted laborers and mechanics are subject to wages at a rate no less than those determined by the U.S. Department of Labor (DOL).

Borrowers must obtain the wage determination for the locality in which a covered activity will take place prior to issuing requests for bids, proposals, quotes, or other methods for soliciting contracts for activities subject to Davis-Bacon. The wage determinations for water infrastructure projects generally fall under the "Heavy" construction type, although the "Building" construction type may also apply. The wage determinations shall be incorporated into solicitations and subsequent contracts. Prime contracts must contain a provision requiring that subcontractors follow the wage determinations incorporated into the prime contract.

Force Account laborers and mechanics employed by a governmental agency or political subdivision are not covered under this Act. Further, under the Contract Work Hours Safety Standards Act, borrowers must ensure contractors are receiving overtime pay for work in excess of forty hours for all contracts above the $100,000 threshold. To ensure proper wages are paid, borrowers must collect certified payrolls from contractors and periodically conduct personnel interviews to verify proper wages are being paid under a contract.

Many states also have their own prevailing wage laws; however, state prevailing wage laws are not a substitute for federal prevailing wage laws. Requirements for both laws must be met and the greater of the two wages should be applied to the contracts (where equivalent state labor categories can be discerned). Where contracts include incorrect wage determinations, the borrower must take steps to reissue or amend the contract to retroactively incorporate the proper wage determination to the beginning of the contract and compensate for any increases in wages resulting from the wage determination correction.

WIFIA cannot close a loan that is not compliant or is not in remediation to return to compliance with this requirement.

WHAT TO EXPECT

The WIFIA program has the responsibility to check that its borrowers understand the Davis-Bacon requirements and that those requirements are being properly implemented for the entire project. The WIFIA program will conduct periodic document reviews and site walk-throughs during project construction to check for implementation of Davis-Bacon requirements as part of its compliance monitoring activities.

During application processing, WIFIA applicants may be asked to:

- ✓ Provide executed construction contracts (active and completed) that include specified Davis-Bacon contract language. DOL regulations require specific language and relevant wage determinations be included in bid documents and contracts. **Note that the specified language under 29 CFR §5.5 has been modified for the WIFIA program to also identify borrowers as authorized representatives to ensure compliance with the statute.** The modified language is included in the WIFIA specifications package, which is available for use by the applicant (see Resources below).

- ✓ Provide executed construction contracts (active and completed) that include relevant wage determinations. DOL publishes wage determinations that specify the minimum wage (including fringe benefits) for a given construction type, labor category, and locality in which the work is conducted. These wages are updated regularly on their website. If state prevailing wages also apply, show evidence that a comparison of labor wage rates and categories have been conducted and that the higher of the wages apply to the contract.

- ✓ If a project has not yet executed contracts, provide sample front-end documents that will be used in all relevant bids and contracts issued for the project.

- ✓ If the project includes previously incurred costs for construction activities, provide additional documentation to help the WIFIA program check that incurred costs are compliant with this requirement. This request may include: (1) results of a third-party Davis-Bacon audit of the project or specific contract(s); (2) a random sample of certified payroll reports and personnel interviews collected for the contract(s); and/or (3) other borrower evidence of compliance checks for reporting and paid wages (including fringe benefits).

As a WIFIA program check on compliance after loan execution, WIFIA borrowers are asked to periodically submit documentation to demonstrate continued compliance with the labor laws and standards. Key borrower responsibilities for implementation include:

- ✓ Communicate Davis-Bacon requirements to contractors and ensure contractors are relaying the requirements to their subcontractors. Statutorily, this communication is required in advertised bids and executed contracts that are a general reporting requirement of the loan and checked by WIFIA. While the WIFIA program may check borrower's prime contracts for this language, the onus is on borrowers and prime contractors to verify the same contract language is applied to all relevant subcontracts and that the subcontracts also comply with this requirement.

- ✓ Identify the proper wage rates to apply in advertised bids and subsequently in executed contracts. During advertisement, borrowers should monitor and update the bid with the latest applicable version of DOL's published wage determinations. Borrowers must award contracts within 90 days of bid close to "lock" the wage determinations included in the advertisement. Otherwise, an updated wage determination is required. Seek assistance from the WIFIA program on selecting proper wage determinations, as needed.
- ✓ For collaborative delivery contracts (e.g., Design-Build, Progressive Design-Build, Construction Management at Risk), there is "substantial and segregable amount[s] of construction work" that can be exercised using amendments or addenda to the contracts. These types of contracts should include a current wage determination at the time an amendment - with the purpose of initiating construction on a package or phase of a project - is exercised. See DOL's AAM157 guidance on 'Application of DBA to Contracts with Options.'
- ✓ Submit draft or executed prime construction contracts for WIFIA program review to ensure that adequate compliance language and the appropriate federal wage rates are included. The WIFIA program does not generally review subcontracts unless there is cause for further review.
- ✓ If a borrower encounters a unique situation at a site that presents uncertainties regarding Davis-Bacon applicability, the borrower must discuss the situation with EPA before authorizing work on that site. This includes any borrower requests for wage conformances for labor classifications that may not exist in the wage determinations. A conformance request must be initiated by the borrower, submitted by EPA, and approved by DOL.
- ✓ If state prevailing wages also apply, ensure that the certified payrolls reflect paid wages that are also, at a mimimum, equal to the corresponding federal prevailing wage rates for the contract.
- ✓ Post proper Davis-Bacon signage and make readily available the applicable prevailing wage determinations at the contruction site(s).
- ✓ Maintain up-to-date records for at least three years after project completion. Records should include:
    - Certified payrolls. Borrowers must collect certified payrolls from contractors weekly and check that payroll reports are accurate and paid wages are consistent with the contract's wage determination and overtime requirements.
    - Personnel interviews. Borrowers must conduct periodic interviews of workers to ensure proper wages are being paid and document the interviews by completing SF-1445: Labor Standards Interview. Although WIFIA does not require a specific number and frequency, interviews should occur throughout the course of construction and include a sufficient sample of job classifications represented on the job, as well as across various contracts.
    - Apprenticeship and Trainee Programs. Borrowers must confirm apprentice and trainee program registrations and check that ratio requirements under the approved program(s) are met.

RESOURCES

- Davis-Bacon regulations (29 CFR Part 5)
- U.S. Department of Labor On-line Wage Determinations
- U.S. Department of Labor Guides, Forms, and Posters for Davis Bacon and Related Acts (with additional resources)
- AAM157 guidance on 'Application of DBA to Contracts with Options'
- Implementing Davis-Bacon Wage Rate Requirements: An EPA Guide for SRFs
- Sample Contract Language in WIFIA Specifications Package

LATEST UPDATES ON FEDERAL REQUIREMENTS

The following federal requirements have been issued since the promulgation of the WIFIA implementation regulation (December 2016) and directly apply to EPA loan and grant programs, including WIFIA borrowers. The WIFIA program will periodically update this section with any notable laws and regulations and WIFIA's expectations for borrower compliance.

PROHIBITION ON CERTAIN TELECOMMUNICATION AND VIDEO SURVEILLANCE SERVICES OR EQUIPMENT

In August 2018, the federal government enacted the John S. McCain National Defense Authorization Act for Fiscal Year 2019 (Public Law, PL 115-232). Section 889(b)(1) of PL 115-232 prohibits an executive agency from obligating or expending loan or grant funds to procure or obtain or to enter into, extend, or renew a contract to procure or obtain "covered telecommunications equipment or services" that are substantial or essential to any system, or as critical technology to any system. Federal loan and grant programs are required to implement this requirement within two years of enactment.

"Covered telecommunications equipment or services" (PL 115-232, Section 889(f)(3)) include:

- Telecommunications equipment produced by Huawei Technologies Company or ZTE Corporation (or any subsidiary or affiliate of such entities).
- For the purpose of public safety, security of government facilities, physical security surveillance of critical infrastructure, and other national security purposes, video surveillance and telecommunications equipment produced by Hytera Communications Corporation, Hangzhou Hikvision Digital Technology Company, or Dahua Technology Company (or any subsidiary or affiliate of such entities).
- Telecommunications or video surveillance services provided by such entities or using such equipment.
- Telecommunications or video surveillance equipment or services produced or provided by an entity that the Secretary of Defense, in consultation with the Director of National Intelligence or the Director of the Federal Bureau of Investigation, reasonably believes to be an entity owned or controlled by, or otherwise connected to, the government of a covered foreign country.

The prohibition does not apply to:

- Procuring with an entity to provide a service that connects to the facilities of a third-party, such as backhaul, roaming, or interconnection arrangements.
- Telecommunications equipment that cannot route or redirect user data traffic or permit visibility into any user data or packets that such equipment transmits or otherwise handles.

Effective August 13, 2020, borrowers cannot submit these costs for WIFIA disbursement as they are no longer eligible costs and the WIFIA program, as a federal loan program, is prohibited from reimbursing for telecommunications equipment and services covered under this law.

WHAT TO EXPECT

To ensure compliance with this requirement, borrowers are asked to:

- ✓ Provide evidence of borrower communication to contractors and subcontractors of the need to comply with the prohibition. This is generally provided in bid advertisements and executed contracts. Although no specific contract language is required, sample contract language in the WIFIA specifications package is available for use by the borrower (see Resources below).

- ✓ Avoid procurement of "covered telecommunications equipment, services, and systems" on contracts that involve the use of federal funds. Access SAM to verify that entities providing telecommunications equipment, services, and systems on the WIFIA project are not listed on the exclusion list.

RESOURCES

- John S. McCain National Defense Authorization Act for Fiscal Year 2019 (PL 115-232)
- System for Award Management (SAM)
- Sample Contract Language in WIFIA Specifications Package

GENERAL GUIDANCE ON COMPLIANCE WITH FEDERAL REQUIREMENTS

The WIFIA program is committed to supporting its borrowers with complying with federal requirements. In any case of uncertainty with implementation, the WIFIA borrower should seek timely clarification and assistance by contacting their respective WIFIA points of contact.

- For general inquiries on federal requirements for the WIFIA program, email: wifia@epa.gov
- For borrowers processing their loan applications, email the WIFIA engineering or environmental contact assigned to the transaction.
- For borrowers with executed loans, email: wifia_portfolio@epa.gov

GUIDING PRINCIPLES FOR COMPLIANCE

Below are guiding principles to support the borrower in ensuring compliance with federal requirements:

UNDERSTAND THE FEDERAL REQUIREMENTS. Reading through this Borrower Guide is a good first step towards understanding the federal requirements that apply to WIFIA borrowers. These requirements are very similar to those that would apply to other federal funding programs. If there is borrower uncertainty on the WIFIA program's expectations for compliance, seek clarifications by contacting the borrower's respective WIFIA point of contact. Borrowers may find that developing a plan for compliance with federal requirements early in project planning can ensure that potential issues are identified and remedied early or are avoided entirely.

IDENTIFY AND COMMUNICATE EARLY. Defining lines of communications and decision-making roles is also important. WIFIA borrowers are responsible for ensuring compliance with federal requirements and should be the ultimate decision-maker for the project. As frequently noted in this guide, the WIFIA program expects borrowers to communicate federal requirements as part of bid solicitations and in executed contracts when WIFIA funding is anticipated. This is particularly beneficial for construction-related work to avoid the need to retroactively address federal requirements with contractors. Timely communication between the borrower and the WIFIA program, as well as between the borrower and its contractors/subs, can help avoid issues of non-compliance. Throughout the course of the WIFIA project, borrowers should not hesitate to communicate potential issues with compliance to the WIFIA program and collectively explore available options and remedies with them.

MAINTAIN GOOD DOCUMENTATION. Good documentation is key to compliance. If there is no evidence that the borrower has complied with federal requirements, the WIFIA program finds it difficult to verify that the borrower is compliant. The WIFIA program does not require any specific software for borrowers to document compliance. There is no single approach to recordkeeping, and it can be as simple or complex as is appropriate for the project.

Borrowers may want to consider the following when establishing recordkeeping procedures:

1. The borrower is responsible for checking and ensuring compliance for their contractors and subcontractors. Organize documents such that they are easy to internally review against federal requirements.

2. The WIFIA program periodically requests review of documents to ensure compliance. This may include document requests for contracts, environmental monitoring reports, AIS certifications for specific items, and certified payrolls and wage determinations. Although the WIFIA program's review may not be inclusive of all contracts and subcontracts, documents should be easy to locate during compliance monitoring activities.
3. Some federal requirements have a minimum duration for maintaining project records, including AIS and Davis-Bacon. Local and state requirements may be longer or shorter. Be aware of recordkeeping requirements to ensure recordkeeping requirements are fully met.

CO-FUNDING WITH OTHER FEDERAL AND STATE PROGRAMS

As a supplementary financing program, WIFIA borrowers may also receive funds from other federally financed programs.

Some of these programs may have overlapping federal requirements; however, each program will have a separate responsibility (and monitoring procedures) to ensure their borrowers comply with the federal requirements outlined for that program. To the extent possible and reasonable, the WIFIA program will work with other federal programs that are co-funding its borrowers to share information on federal compliance activities that may be relevant across the programs. For example, WIFIA borrowers may also receive funding from their SRF program for a project. To help gain efficiencies for both programs, the WIFIA program might coordinate environmental reviews where there are overlapping elements with the state environmental review process. The WIFIA program might also work collaboratively with the state SRF on AIS-related matters.

On the other hand, some of these federally financed programs may have similar but different requirements. WIFIA borrowers should evaluate these separate requirements in its entirety such that implementation will satisfy both sets of requirements. For example, WIFIA borrowers may also receive financing from the Department of Transportation, which may trigger Buy American requirements. AIS and Buy American requirements are separate and distinct. One does not replace the other. WIFIA borrowers will have to satisfy both these requirements.

STATE LAWS AND REGULATIONS

Federal and state laws and regulations do not replace each other. WIFIA borrowers should evaluate federal and state requirements in their entirety such that implementation will satisfy both sets of requirements. For example, the Davis-Bacon Act requires that laborers and mechanics are at least paid the federal prevailing wage laws. If the state prevailing wage law provides higher wages than the federal prevailing wage for the locality and for an equivalent labor category, then the use of the state prevailing wage for that locality and equivalent labor category can satisfy both federal and state prevailing wage law requirements for paid wages. However, the use of higher state wage rates does not preclude the WIFIA borrower from having to comply with other requirements under the Davis-Bacon Act.

PROFESSIONAL SERVICE CONTRACTS VERSUS CONSTRUCTION CONTRACTS

All contracts issued for a project that is receiving a WIFIA loan are subject to a federal requirements review as part of the WIFIA program's compliance monitoring responsibilities. The review ensures that federal requirements are being communicated from borrower to contractors and from contractors to

subcontractors. During compliance monitoring, WIFIA targets this review on prime construction contracts as an initial assessment of the borrower's compliance; however, additional contracts may be requested if warranted.

Not all federal laws and regulations listed in this document apply to professional services contracts. In particular, contract language for American Iron and Steel requirements, Davis Bacon and Related Acts, and Equal Employment Opportunity (EEO), Executive Order 11246, do not apply to professional services contracts. On the other hand, professional services contracts do require reference to the economic and miscellaneous authorities listed in this document.

All contracts must abide by the civil rights and non-discrimination laws, whether they are referenced in contracts or not.

APPENDIX: WIFIA SPECIFICATION PACKAGE AND BID CONTRACT LANGUAGE

Last Updated: December 2020

The is a reference document that provides all necessary contract language for WIFIA funded projects. Please note that some of the contract language in this package is required and must be included verbatim and some is suggested. For *Suggested Contract Language*, you may use your own language so long as it still ensures that provisions are included to guarantee compliance with the federal requirements.

EPA MAKES NO CLAIMS REGARDING THE LEGALITY OF THE FEDERAL LANGUAGE PROVISIONS WITH RESPECT TO STATE OR LOCAL LAW.

ECONOMIC AND MISCELLANEOUS AUTHORITIES

DEBARMENT AND SUSPENSION AND PROHIBITIONS RELATING TO VIOLATIONS OF CWA AND CAA WITH RESPECT TO FEDERAL CONTRACTS, GRANTS, OR LOANS

Suggested Contract Language:

Debarment and Suspension. Contractor certifies that it will not knowingly enter into a contract with anyone who is ineligible under the 2 CFR part 180 and part 1532 (per Executive Order 12549, 51 FR 6370, February 21, 1986) or who is prohibited under Section 306 of the Clean Air Act or Section 508 of the Clean Water Act to participate in the [Project]. Suspension and debarment information can be accessed at http://www.sam.gov. Contractor represents and warrants that it has or will include a term or conditions requiring compliance with this provision in all of its subcontracts under this Agreement.

NEW RESTRICTIONS ON LOBBYING

Suggested Contract Language:

Federal Lobbying Restrictions (31 U.S.C 1352). Recipients of federal financial assistance may not pay any person for influencing or attempting to influence any officer or employee of a federal agency, a member of Congress, an officer or employee of Congress, or an employee of a member of Congress with respect to the award, continuation, renewal, amendment, or modification of a federal grant, loan, or contract. These requirements are implemented for USEPA in 40 CFR Part 34, which also describes types of activities, such as legislative liaison activities and professional and technical services, which are not subject to this prohibition. Upon award of this contract, Contractor shall complete and submit to the City the certification and disclosure forms in Appendix A and Appendix B to 40 CFR Part 34. Contractor shall also require all subcontractors and suppliers of any tier awarded a subcontract over $100,000 to similarly complete and submit the certification and disclosure forms pursuant to the process set forth in 40 CFR 34.110.

CIVIL RIGHTS, NONDISCRIMINATION, AND EQUAL EMPLOYMENT OPPORTUNITY AUTHORITIES

AGE DISCRIMINATION ACT, SECTION 504 OF THE REHABILITATION ACT, TITLE VI OF THE CIVIL RIGHTS ACT OF 1964, AND SECTION 13 OF THE CLEAN WATER ACT

Suggested Contract Language:

CIVIL RIGHTS OBLIGATIONS. Contractor shall comply with the following federal non-discrimination requirements:

a. Title VI of the Civil Rights Act of 1964, which prohibits discrimination based on race, color, and national origin, including limited English proficiency (LEP). (42 U.S.C 2000D, *et. seq)*
b. Section 504 of the Rehabilitation Act of 1973, which prohibits discrimination against persons with disabilities. (29 U.S.C. 794, supplemented by EO 11914, 41 FR 17871, April 29, 1976 and EO 11250, 30 FR 13003, October 13, 1965)
c. The Age Discrimination Act of 1975, which prohibits age discrimination. (42 U.S.C 6101 *et. seq)*
d. Section 13 of the Federal Water Pollution Control Act Amendments of 1972, which prohibits discrimination on the basis of sex.
e. 40 CFR Part 7, as it relates to the foregoing.

EQUAL EMPLOYMENT OPPORTUNITY

Required *Contract Language. This language must be included verbatim:*

Equal Employment Opportunity (EEO). The Contractor shall comply with Executive Order 11246, entitled 'Equal Employment Opportunity,' as amended by Executive Order 11375, and as supplemented in Department of Labor regulations (41 CFR Part 60). (EO 11246, 30 FR 12319, September 28, 1965)

Contractor's compliance with Executive order 11246 shall be based on implementation of the Equal Opportunity Clause, and specific affirmative active obligations required by the Standard Federal Equal Employment Opportunity Construction Contract Specifications, as set forth in 41 CFR Part 60-4.

During the performance of this contract, the contractor agrees as follows:

1) The contractor will not discriminate against any employee or applicant for employment because of race, color, religion, sex, sexual orientation, gender identity, or national origin. The contractor will take affirmative action to ensure that applicants are employed, and that employees are treated during employment, without regard to their race, color, religion, sex, sexual orientation, gender identity, or national origin. Such action shall include, but not be limited to the following: employment, upgrading, demotion, or transfer; recruitment or recruitment advertising; layoff or termination; rates of pay or other forms of compensation; and selection for training, including apprenticeship. The contractor agrees to post in conspicuous places, available to employees and applicants for employment, notices

to be provided by the contracting officer setting forth the provisions of this nondiscrimination clause.

2) The contractor will, in all solicitations or advancements for employees placed by or on behalf of the contractor, state that all qualified applicants will receive consideration for employment without regard to race, color, religion, sex, sexual orientation, gender identity, or national origin.
3) The contractor will not discharge or in any other manner discriminate against any employee or applicant for employment because such employee or applicant has inquired about, discussed, or disclosed the compensation of the employee or applicant or another employee or applicant. This provision shall not apply to instances in which an employee who has access to the compensation information of other employees or applicants as a part of such employee's essential job functions discloses the compensation of such other employees or applicants to individuals who do not otherwise have access to such information, unless such disclosure is in response to a formal complaint or charge, in furtherance of an investigation, proceeding, hearing, or action, including an investigation conducted by the employer, or is consistent with the contractor's legal duty to furnish information.
4) The contractor will send to each labor union or representative of workers with which he has a collective bargaining agreement or other contract or understanding, a notice, to be provided by the agency contracting officer, advising the labor union or workers' representative of the contractor's commitments under Section 202 of Executive Order No. 11246 of September 24, 1965, and shall post copies of the notice in conspicuous places available to employees and applicants for employment.
5) The contractor will comply with all provisions of Executive Order No. 11246 of Sept. 24, 1965, and of the rules, regulations, and relevant orders of the Secretary of Labor.
6) The contractor will furnish all information and reports required by Executive Order No. 11246 of September 24, 1965, and by the rules, regulations, and orders of the Secretary of Labor, or pursuant thereto, and will permit access to his books, records, and accounts by the contracting agency and the Secretary of Labor for purposes of investigation to ascertain compliance with such rules, regulations, and orders.
7) In the event of the contractor's noncompliance with the nondiscrimination clauses of this contract or with any of such rules, regulations, or orders, this contract may be cancelled, terminated, or suspended in whole or in part and the contractor may be declared ineligible for further Government contracts in accordance with procedures authorized in Executive Order No. 11246 of Sept. 24, 1965, and such other sanctions may be imposed and remedies invoked as provided in Executive Order No. 11246 of September 24, 1965, or by rule, regulation, or order of the Secretary of Labor, or as otherwise provided by law.
8) The contractor will include the provisions of paragraphs (1) through (8) in every subcontract or purchase order unless exempted by rules, regulations, or orders of the Secretary of Labor issued pursuant to Section 204 of Executive Order No. 11246 of September 24, 1965, so that such provisions will be binding upon each subcontractor or vendor. The contractor will take such action with respect to any subcontract or purchase order as may be directed by the Secretary of Labor as a means of enforcing such provisions including sanctions for noncompliance: Provided, however, that in the event the contractor becomes involved in, or is threatened with, litigation with a subcontractor or vendor as a result of such direction, the contractor may request the United States to enter into such litigation to protect the interests of the United States. [Sec. 202 amended by EO 11375 of Oct. 13, 1967, 32 FR 14303, 3 CFR, 1966–1970 Comp., p. 684, EO 12086 of Oct. 5, 1978, 43 FR 46501, 3 CFR, 1978 Comp.,

p. 230, EO 13665 of April 8, 2014, 79 FR 20749, EO 13672 of July 21, 2014, 79 FR 42971]

Standard Federal Equal Employment Opportunity Construction Contract Specifications. (41 CFR 60-4.3)

1) As used in these specifications:
   a) "Covered area" means the geographical area described in the solicitation from which this contract resulted;
   b) "Director" means Director, Office of Federal Contract Compliance Programs, United States Department of Labor, or any person to whom the Director delegates authority;
   c) "Employer identification number" means the Federal Social Security number used on the Employer's Quarterly Federal Tax Return, U.S. Treasury Department Form 941.
   d) "Minority" includes:
      i) Black (all persons having origins in any of the Black African racial groups not of Hispanic origin);
      ii) Hispanic (all persons of Mexican, Puerto Rican, Cuban, Central or South American or other Spanish Culture or origin, regardless of race);
      iii) Asian and Pacific Islander (all persons having origins in any of the original peoples of the Far East, Southeast Asia, the Indian Subcontinent, or the Pacific Islands); and
      iv) American Indian or Alaskan Native (all persons having origins in any of the original peoples of North America and maintaining identifiable tribal affiliations through membership and participation or community identification).
2) Whenever the Contractor, or any Subcontractor at any tier, subcontracts a portion of the work involving any construction trade, it shall physically include in each subcontract in excess of $10,000 the provisions of these specifications and the Notice which contains the applicable goals for minority and female participation and which is set forth in the solicitations from which this contract resulted.
3) If the Contractor is participating (pursuant to 41 CFR 60-4.5) in a Hometown Plan approved by the U.S. Department of Labor in the covered area either individually or through an association, its affirmative action obligations on all work in the Plan area (including goals and timetables) shall be in accordance with that Plan for those trades which have unions participating in the Plan. Contractors must be able to demonstrate their participation in and compliance with the provisions of any such Hometown Plan. Each Contractor or Subcontractor participating in an approved Plan is individually required to comply with its obligations under the EEO clause, and to make a good faith effort to achieve each goal under the Plan in each trade in which it has employees. The overall good faith performance by other Contractors or Subcontractors toward a goal in an approved Plan does not excuse any covered Contractor's or Subcontractor's failure to take good faith efforts to achieve the Plan goals and timetables.
4) The Contractor shall implement the specific affirmative action standards provided in paragraphs 7 a through p of these specifications. The goals set forth in the solicitation from which this contract resulted are expressed as percentages of the total hours of employment and training of minority and female utilization the Contractor should reasonably be able to achieve in each construction trade in which it has employees in the covered area. Covered Construction contractors performing construction work in geographical areas where they do not have a Federal or federally assisted construction contract shall apply the minority and female goals established for the geographical area

where the work is being performed. Goals are published periodically in the Federal Register in notice form, and such notices may be obtained from any Office of Federal Contract Compliance Programs office or from Federal procurement contracting officers. The Contractor is expected to make substantially uniform progress in meeting its goals in each craft during the period specified.

5) Neither the provisions of any collective bargaining agreement, nor the failure by a union with whom the Contractor has a collective bargaining agreement, to refer either minorities or women shall excuse the Contractor's obligations under these specifications, Executive Order 11246, or the regulations promulgated pursuant thereto.
6) In order for the nonworking training hours of apprentices and trainees to be counted in meeting the goals, such apprentices and trainees must be employed by the Contractor during the training period, and the Contractor must have made a commitment to employ the apprentices and trainees at the completion of their training, subject to the availability of employment opportunities. Trainees must be trained pursuant to training programs approved by the U.S. Department of Labor.
7) The Contractor shall take specific affirmative actions to ensure equal employment opportunity. The evaluation of the Contractor's compliance with these specifications shall be based upon its effort to achieve maximum results from its actions. The Contractor shall document these efforts fully, and shall implement affirmative action steps at least as extensive as the following:
    a) Ensure and maintain a working environment free of harassment, intimidation, and coercion at all sites, and in all facilities at which the Contractor's employees are assigned to work. The Contractor, where possible, will assign two or more women to each construction project. The Contractor shall specifically ensure that all foremen, superintendents, and other on-site supervisory personnel are aware of and carry out the Contractor's obligation to maintain such a working environment, with specific attention to minority or female individuals working at such sites or in such facilities.
    b) Establish and maintain a current list of minority and female recruitment sources, provide written notification to minority and female recruitment sources and to community organizations when the Contractor or its unions have employment opportunities available, and maintain a record of the organizations' responses.
    c) Maintain a current file of the names, addresses and telephone numbers of each minority and female off-the-street applicant and minority or female referral from a union, a recruitment source or community organization and of what action was taken with respect to each such individual. If such individual was sent to the union hiring hall for referral and was not referred back to the Contractor by the union or, if referred, not employed by the Contractor, this shall be documented in the file with the reason therefor, along with whatever additional actions the Contractor may have taken.
    d) Provide immediate written notification to the Director when the union or unions with which the Contractor has a collective bargaining agreement has not referred to the Contractor a minority person or woman sent by the Contractor, or when the Contractor has other information that the union referral process has impeded the Contractor's efforts to meet its obligations.
    e) Develop on-the-job training opportunities and/or participate in training programs for the area which expressly include minorities and women, including upgrading programs and apprenticeship and trainee programs relevant to the Contractor's employment needs, especially those programs

funded or approved by the Department of Labor. The Contractor shall provide notice of these programs to the sources compiled under 7b above.

f) Disseminate the Contractor's EEO policy by providing notice of the policy to unions and training programs and requesting their cooperation in assisting the Contractor in meeting its EEO obligations; by including it in any policy manual and collective bargaining agreement; by publicizing it in the company newspaper, annual report, etc.; by specific review of the policy with all management personnel and with all minority and female employees at least once a year; and by posting the company EEO policy on bulletin boards accessible to all employees at each location where construction work is performed.

g) Review, at least annually, the company's EEO policy and affirmative action obligations under these specifications with all employees having any responsibility for hiring, assignment, layoff, termination or other employment decisions including specific review of these items with onsite supervisory personnel such as Superintendents, General Foremen, etc., prior to the initiation of construction work at any job site. A written record shall be made and maintained identifying the time and place of these meetings, persons attending, subject matter discussed, and disposition of the subject matter.

h) Disseminate the Contractor's EEO policy externally by including it in any advertising in the news media, specifically including minority and female news media, and providing written notification to and discussing the Contractor's EEO policy with other Contractors and Subcontractors with whom the Contractor does or anticipates doing business.

i) Direct its recruitment efforts, both oral and written, to minority, female and community organizations, to schools with minority and female students and to minority and female recruitment and training organizations serving the Contractor's recruitment area and employment needs. Not later than one month prior to the date for the acceptance of applications for apprenticeship or other training by any recruitment source, the Contractor shall send written notification to organizations such as the above, describing the openings, screening procedures, and tests to be used in the selection process.

j) Encourage present minority and female employees to recruit other minority persons and women and, where reasonable, provide after school, summer and vacation employment to minority and female youth both on the site and in other areas of a Contractor's work force.

k) Validate all tests and other selection requirements where there is an obligation to do so under 41 CFR part 60-3.

l) Conduct, at least annually, an inventory and evaluation at least of all minority and female personnel for promotional opportunities and encourage these employees to seek or to prepare for, through appropriate training, etc., such opportunities.

m) Ensure that seniority practices, job classifications, work assignments and other personnel practices, do not have a discriminatory effect by continually monitoring all personnel and employment related activities to ensure that the EEO policy and the Contractor's obligations under these specifications are being carried out.

n) Ensure that all facilities and company activities are non-segregated except that separate or single-user toilet and necessary changing facilities shall be provided to assure privacy between the sexes.

o) Document and maintain a record of all solicitations of offers for subcontracts from minority and

female construction contractors and suppliers, including circulation of solicitations to minority and female contractor associations and other business associations.

p) Conduct a review, at least annually, of all supervisors' adherence to and performance under the Contractor's EEO policies and affirmative action obligations.

8) Contractors are encouraged to participate in voluntary associations which assist in fulfilling one or more of their affirmative action obligations (7a through p). The efforts of a contractor association, joint contractor-union, contractor-community, or other similar group of which the contractor is a member and participant, may be asserted as fulfilling any one or more of its obligations under 7a through p of these Specifications provided that the contractor actively participates in the group, makes every effort to assure that the group has a positive impact on the employment of minorities and women in the industry, ensures that the concrete benefits of the program are reflected in the Contractor's minority and female workforce participation, makes a good faith effort to meet its individual goals and timetables, and can provide access to documentation which demonstrates the effectiveness of actions taken on behalf of the Contractor. The obligation to comply, however, is the Contractor's and failure of such a group to fulfill an obligation shall not be a defense for the Contractor's noncompliance.

9) A single goal for minorities and a separate single goal for women have been established. The Contractor, however, is required to provide equal employment opportunity and to take affirmative action for all minority groups, both male and female, and all women, both minority and non-minority. Consequently, the Contractor may be in violation of the Executive Order if a particular group is employed in a substantially disparate manner (for example, even though the Contractor has achieved its goals for women generally, the Contractor may be in violation of the Executive Order if a specific minority group of women is underutilized).

10) The Contractor shall not use the goals and timetables or affirmative action standards to discriminate against any person because of race, color, religion, sex, sexual orientation, gender identity, or national origin.

11) The Contractor shall not enter into any Subcontract with any person or firm debarred from Government contracts pursuant to Executive Order 11246.

12) The Contractor shall carry out such sanctions and penalties for violation of these specifications and of the Equal Opportunity Clause, including suspension, termination and cancellation of existing subcontracts as may be imposed or ordered pursuant to Executive Order 11246, as amended, and its implementing regulations, by the Office of Federal Contract Compliance Programs. Any Contractor who fails to carry out such sanctions and penalties shall be in violation of these specifications and Executive Order 11246, as amended.

13) The Contractor, in fulfilling its obligations under these specifications, shall implement specific affirmative action steps, at least as extensive as those standards prescribed in paragraph 7 of these specifications, so as to achieve maximum results from its efforts to ensure equal employment opportunity. If the Contractor fails to comply with the requirements of the Executive Order, the implementing regulations, or these specifications, the Director shall proceed in accordance with 41 CFR 60-4.8.

14) The Contractor shall designate a responsible official to monitor all employment related activity to ensure that the company EEO policy is being carried out, to submit reports relating to the provisions

hereof as may be required by the Government and to keep records. Records shall at least include for each employee the name, address, telephone numbers, construction trade, union affiliation if any, employee identification number when assigned, social security number, race, sex, status (e.g., mechanic, apprentice trainee, helper, or laborer), dates of changes in status, hours worked per week in the indicated trade, rate of pay, and locations at which the work was performed. Records shall be maintained in an easily understandable and retrievable form; however, to the degree that existing records satisfy this requirement, contractors shall not be required to maintain separate records.

15) Nothing herein provided shall be construed as a limitation upon the application of other laws which establish different standards of compliance or upon the application of requirements for the hiring of local or other area residents (e.g., those under the Public Works Employment Act of 1977 and the Community Development Block Grant Program).

Segregated Facilities. (41 CFR 60-1.8) The contractor must ensure that facilities provided for employees are provided in such a manner that segregation on the basis of race, color, religion, sex, sexual orientation, gender identity, or national origin cannot result. The contractor may neither require such segregated use by written or oral policies nor tolerate such use by employee custom. The contractor's obligation extends further to ensuring that its employees are not assigned to perform their services at any location, under the contractor's control, where the facilities are segregated. This obligation extends to all contracts containing the equal opportunity clause regardless of the amount of the contract. The term “facilities,” as used in this section, means waiting rooms, work areas, restaurants and other eating areas, time clocks, restrooms, wash rooms, locker rooms, and other storage or dressing areas, parking lots, drinking fountains, recreation or entertainment areas, transportation, and housing provided for employees; Provided, That separate or single-user restrooms and necessary dressing or sleeping areas shall be provided to assure privacy between the sexes.

Required *language in bid solicitations (or equivalent):*

Notice of Requirement for Affirmative Action to Ensure Equal Employment Opportunity (Executive Order 11246) located at 41 CFR § 60-4.2:

1. The Offeror's or Bidder's attention is called to the “Equal Opportunity Clause” and the “Standard Federal Equal Employment Specifications” set forth herein.
2. The goals and timetables for minority and female participation, expressed in percentage terms for the Contractor's aggregate workforce in each trade on all construction work in the covered area, are as follows:

Timetables	Goals for minority participation for each trade	Goals for female participation in each trade
	Insert goals for each year[1]	6.9%[2]

These goals are applicable to all the Contractor's construction work (whether or not it is Federal or federally assisted) performed in the covered area. If the contractor performs construction work

[1] Goals can be found at: https://www.dol.gov/agencies/ofccp/construction
[2] Nationwide goal for all covered areas

in a geographical area located outside of the covered area, it shall apply the goals established for such geographical area where the work is actually performed. With regard to this second area, the contractor also is subject to the goals for both its federally involved and non-federally involved construction.

The Contractor's compliance with the Executive Order and the regulations in 41 CFR part 60-4 shall be based on its implementation of the Equal Opportunity Clause, specific affirmative action obligations required by the specifications set forth in 41 CFR 60-4.3(a), and its efforts to meet the goals. The hours of minority and female employment and training must be substantially uniform throughout the length of the contract, and in each trade, and the contractor shall make a good faith effort to employ minorities and women evenly on each of its projects. The transfer of minority or female employees or trainees from Contractor to Contractor or from project to project for the sole purpose of meeting the Contractor's goals shall be a violation of the contract, the Executive Order and the regulations in 41 CFR part 60-4. Compliance with the goals will be measured against the total work hours performed.

3. The Contractor shall provide written notification to the Director of the Office of Federal Contract Compliance Programs within 10 working days of award of any construction subcontract in excess of $10,000 at any tier for construction work under the contract resulting from this solicitation. The notification shall list the name, address and telephone number of the subcontractor; employer identification number of the subcontractor; estimated dollar amount of the subcontract; estimated starting and completion dates of the subcontract; and the geographical area in which the subcontract is to be performed.
4. As used in this Notice, and in the contract resulting from this solicitation, the “covered area” is (insert description of the geographical areas where the contract is to be performed giving the state, county and city, if any).

PARTICIPATION BY DISADVANTAGED BUSINESS ENTERPRISES IN PROCUREMENT UNDER EPA FINANCIAL ASSISTANCE AGREEMENTS

Note: The WIFIA program only requires use of the EPA DBE program’s six good faith efforts during contract procurement. States may require additional DBE reporting.

Suggested Contract Language:

Disadvantaged Business Enterprises (DBE). The contractor must ensure that the DBE’s six good faith efforts are used during the procurement of subcontractors for the [Project]. The six good faith efforts are found at: https://www.epa.gov/grants/disadvantaged-business-enterprise-program-requirements#sixgoodfaithefforts.

AMERICAN IRON AND STEEL (AIS) REQUIREMENT

Suggested Contract Language:

The Contractor acknowledges to and for the benefit of _____ ("Purchaser") and the United States Environmental Protection Agency ("EPA") that it understands the goods and services under this Agreement are being funded with monies made available by the Water Infrastructure Finance and Innovation Act program of the EPA that has statutory requirements commonly known as "American Iron and Steel" that requires all of the iron and steel products used in the project to be produced in the United States ("American Iron and Steel Requirement") including iron and steel products provided by the Contactor pursuant to this Agreement. The Contractor hereby represents, warrants and covenants to and for the benefit of the Purchaser and the EPA that (a) the Contractor has reviewed and understands the American Iron and Steel Requirement, (b) all of the iron and steel products used in the project will be and/or have been produced in the United States in a manner that complies with the American Iron and Steel Requirement, unless a waiver of the requirement is approved, and (c) the Contractor will provide any further verified information, certification or assurance of compliance with this paragraph, or information necessary to support a waiver of the American Iron and Steel Requirement, as may be requested by the Purchaser or the EPA. Notwithstanding any other provision of this Agreement, any failure to comply with this paragraph by the Contractor shall permit the Purchaser or the EPA to recover as damages against the Contractor any loss, expense, or cost (including without limitation attorney's fees) incurred by the Purchaser or the EPA resulting from any such failure (including without limitation any impairment or loss of funding, whether in whole or in part, from the EPA or any damages owed to the EPA by the Purchaser). While the Contractor has no direct contractual privity with the EPA, as a lender to the Purchaser for the funding of its project, the Purchaser and the Contractor agree that the EPA is a third-party beneficiary and neither this paragraph (nor any other provision of this Agreement necessary to give this paragraph force or effect) shall be amended or waived without the prior written consent of the EPA.

LABOR LAWS AND STANDARDS

Note that the language below addresses Davis Bacon and Related Acts and incorporates the WIFIA borrower as an authorized representative, in accordance with the WIFIA loan agreement, to ensure compliance with this federal requirement.

Required *Contract Language.*

Compliance with Davis-Bacon and Related Acts.

(a) In any contract in excess of $2,000 which is entered into for the actual construction, alteration and/or repair, including painting and decorating, of a public building or public work, or building or work financed in whole or in part from Federal funds or in accordance with guarantees of a Federal agency or financed from funds obtained by pledge of any contract of a Federal agency to make a loan, grant or annual contribution (except where a different meaning is expressly indicated), and which is subject to the labor standards provisions of any of the acts listed in 29 C.F.R. § 5.1, the following clauses (or any modifications thereof to meet the particular needs of the agency, provided that such modifications are first approved by the Department of Labor):

(1) Minimum wages.

(i) All laborers and mechanics employed or working upon the site of the work (or under the United States Housing Act of 1937 or under the Housing Act of 1949 in the construction or development of the project), will be paid unconditionally and not less often than once a week, and without subsequent deduction or rebate on any account (except such payroll deductions as are permitted by regulations issued by the Secretary of Labor under the Copeland Act (29 CFR part 3)), the full amount of wages and bona fide fringe benefits (or cash equivalents thereof) due at time of payment computed at rates not less than those contained in the wage determination of the Secretary of Labor which is attached hereto and made a part hereof, regardless of any contractual relationship which may be alleged to exist between the contractor and such laborers and mechanics. Contributions made or costs reasonably anticipated for bona fide fringe benefits under section 1(b)(2) of the Davis-Bacon Act on behalf of laborers or mechanics are considered wages paid to such laborers or mechanics, subject to the provisions of paragraph (a)(1)(iv) of this section; also, regular contributions made or costs incurred for more than a weekly period (but not less often than quarterly) under plans, funds, or programs which cover the particular weekly period, are deemed to be constructively made or incurred during such weekly period. Such laborers and mechanics shall be paid the appropriate wage rate and fringe benefits on the wage determination for the classification of work actually performed, without regard to skill, except as provided in § 5.5(a)(4). Laborers or mechanics performing work in more than one classification may be compensated at the rate specified for each classification for the time actually worked therein: Provided that the employer's payroll records accurately set forth the time spent in each classification in which work is performed. The wage determination (including any additional classification and wage rates conformed under paragraph (a)(1)(ii) of this section) and the Davis-Bacon poster (WH-1321) shall be posted at all times by the contractor and its subcontractors at the site of the work in a prominent and accessible place where it can be

easily seen by the workers.

(ii)

(A) The WIFIA assistance recipient, [name of WIFIA borrower], on behalf of the U.S. Environmental Protection Agency (EPA), shall require that any class of laborers or mechanics, including helpers, which is not listed in the wage determination and which is to be employed under the contract shall be classified in conformance with the wage determination. The WIFIA assistance recipient shall approve an additional classification and wage rate and fringe benefits therefore only when the following criteria have been met:

(1) The work to be performed by the classification requested is not performed by a classification in the wage determination; and

(2) The classification is utilized in the area by the construction industry; and

(3) The proposed wage rate, including any bona fide fringe benefits, bears a reasonable relationship to the wage rates contained in the wage determination.

(B) If the contractor and the laborers and mechanics to be employed in the classification (if known), or their representatives, and the WIFIA assistance recipient agree on the classification and wage rate (including the amount designated for fringe benefits where appropriate), a report of the action taken shall be sent to the Administrator of the Wage and Hour Division (WHD Administrator), U.S. Department of Labor, Washington, DC 20210. The WHD Administrator, or an authorized representative, will approve, modify, or disapprove every additional classification action within 30 days of receipt and so advise the WIFIA assistance recipient or will notify the WIFIA assistance recipient within the 30-day period that additional time is necessary.

(C) In the event the contractor, the laborers or mechanics to be employed in the classification or their representatives, and the WIFIA assistance recipient do not agree on the proposed classification and wage rate (including the amount designated for fringe benefits, where appropriate), the WIFIA assistance recipient shall refer the questions, including the views of all interested parties and the recommendation of the WIFIA assistance recipient, to the WHD Administrator for determination. The WHD Administrator, or an authorized representative, will issue a determination within 30 days of receipt and so advise the WIFIA assistance recipient or will notify the WIFIA assistance recipient within the 30-day period that additional time is necessary.

(D) The wage rate (including fringe benefits where appropriate) determined pursuant to paragraphs (a)(1)(ii) (B) or (C) of this section, shall be paid to all workers performing work in the classification under this contract from the first day on which work is performed in the classification.

(iii) Whenever the minimum wage rate prescribed in the contract for a class of laborers or mechanics includes a fringe benefit which is not expressed as an hourly rate, the contractor shall either pay the benefit as stated in the wage determination or shall pay another bona fide fringe benefit or an hourly cash equivalent thereof.

(iv) If the contractor does not make payments to a trustee or other third person, the contractor may consider as part of the wages of any laborer or mechanic the amount of any costs

reasonably anticipated in providing bona fide fringe benefits under a plan or program, Provided, That the Secretary of Labor has found, upon the written request of the contractor, that the applicable standards of the Davis-Bacon Act have been met. The Secretary of Labor may require the contractor to set aside in a separate account assets for the meeting of obligations under the plan or program.

(2) Withholding. [name of WIFIA borrower], shall upon written request of the WIFIA Director or an authorized representative of the Department of Labor withhold or cause to be withheld from the contractor under this contract or any other Federal contract with the same prime contractor, or any other federally-assisted contract subject to Davis-Bacon prevailing wage requirements, which is held by the same prime contractor, so much of the accrued payments or advances as may be considered necessary to pay laborers and mechanics, including apprentices, trainees, and helpers, employed by the contractor or any subcontractor the full amount of wages required by the contract. In the event of failure to pay any laborer or mechanic, including any apprentice, trainee, or helper, employed or working on the site of the work (or under the United States Housing Act of 1937 or under the Housing Act of 1949 in the construction or development of the project), all or part of the wages required by the contract, the WIFIA Director may, after written notice to the contractor, sponsor, applicant, or owner, take such action as may be necessary to cause the suspension of any further payment, advance, or guarantee of funds until such violations have ceased.

(3) Payrolls and basic records.

(i) Payrolls and basic records relating thereto shall be maintained by the contractor during the course of the work and preserved for a period of three years thereafter for all laborers and mechanics working at the site of the work (or under the United States Housing Act of 1937, or under the Housing Act of 1949, in the construction or development of the project). Such records shall contain the name, address, and social security number of each such worker, his or her correct classification, hourly rates of wages paid (including rates of contributions or costs anticipated for bona fide fringe benefits or cash equivalents thereof of the types described in section 1(b)(2)(B) of the Davis-Bacon Act), daily and weekly number of hours worked, deductions made and actual wages paid. Whenever the Secretary of Labor has found under 29 CFR 5.5(a)(1)(iv) that the wages of any laborer or mechanic include the amount of any costs reasonably anticipated in providing benefits under a plan or program described in section 1(b)(2)(B) of the Davis-Bacon Act, the contractor shall maintain records which show that the commitment to provide such benefits is enforceable, that the plan or program is financially responsible, and that the plan or program has been communicated in writing to the laborers or mechanics affected, and records which show the costs anticipated or the actual cost incurred in providing such benefits. Contractors employing apprentices or trainees under approved programs shall maintain written evidence of the registration of apprenticeship programs and certification of trainee programs, the registration of the apprentices and trainees, and the ratios and wage rates prescribed in the applicable programs.

(ii) {no text here}

(A) The contractor shall submit weekly for each week in which any contract work is performed a copy of all payrolls to [name of WIFIA borrower] . The payrolls submitted shall set out accurately and completely all of the information required to be maintained under 29 CFR 5.5(a)(3)(i), except that full social security numbers and home addresses shall not be included on weekly transmittals. Instead the payrolls shall only need to include an individually identifying number for each employee (e.g., the last four digits of the employee's social security number). The required weekly payroll information may be submitted in any form desired. Optional Form WH-347 is available for this purpose from the Wage and Hour Division Web site at https://www.dol.gov/agencies/whd/forms/wh347 or its successor site. The prime contractor is responsible for the submission of copies of payrolls by all subcontractors. Contractors and subcontractors shall maintain the full social security number and current address of each covered worker, and shall provide them upon request to [name of WIFIA borrower], for transmission to the EPA, the contractor, or the Wage and Hour Division of the Department of Labor for purposes of an investigation or audit of compliance with prevailing wage requirements. It is not a violation of this section for a prime contractor to require a subcontractor to provide addresses and social security numbers to the prime contractor for its own records, without weekly submission to[name of WIFIA borrower]).

(B) Each payroll submitted shall be accompanied by a "Statement of Compliance," signed by the contractor or subcontractor or his or her agent who pays or supervises the payment of the persons employed under the contract and shall certify the following:

(1) That the payroll for the payroll period contains the information required to be provided under § 5.5 (a)(3)(ii) of Regulations, 29 CFR part 5, the appropriate information is being maintained under § 5.5 (a)(3)(i) of Regulations, 29 CFR part 5, and that such information is correct and complete;

(2) That each laborer or mechanic (including each helper, apprentice, and trainee) employed on the contract during the payroll period has been paid the full weekly wages earned, without rebate, either directly or indirectly, and that no deductions have been made either directly or indirectly from the full wages earned, other than permissible deductions as set forth in Regulations, 29 CFR part 3;

(3) That each laborer or mechanic has been paid not less than the applicable wage rates and fringe benefits or cash equivalents for the classification of work performed, as specified in the applicable wage determination incorporated into the contract.

(C) The weekly submission of a properly executed certification set forth on the reverse side of Optional Form WH-347 shall satisfy the requirement for submission of the "Statement of Compliance" required by paragraph (a)(3)(ii)(B) of this section.

(D) The falsification of any of the above certifications may subject the contractor or subcontractor to civil or criminal prosecution under section 1001 of title 18 and section 231 of title 31 of the United States Code.

(iii) The contractor or subcontractor shall make the records required under paragraph (a)(3)(i) of this section available for inspection, copying, or transcription by authorized representatives of [name of the borrower, EPA, or the Department of Labor, and shall permit such

representatives to interview employees during working hours on the job. If the contractor or subcontractor fails to submit the required records or to make them available, the EPA may, after written notice to the [name of WIFIA borrower], take such action as may be necessary to cause the suspension of any further payment, advance, or guarantee of funds. Furthermore, failure to submit the required records upon request or to make such records available may be grounds for debarment action pursuant to 29 CFR 5.12.

(4) Apprentices and trainees –

(i) Apprentices. Apprentices will be permitted to work at less than the predetermined rate for the work they performed when they are employed pursuant to and individually registered in a bona fide apprenticeship program registered with the U.S. Department of Labor, Employment and Training Administration, Office of Apprenticeship Training, Employer and Labor Services, or with a State Apprenticeship Agency recognized by the Office, or if a person is employed in his or her first 90 days of probationary employment as an apprentice in such an apprenticeship program, who is not individually registered in the program, but who has been certified by the Office of Apprenticeship Training, Employer and Labor Services or a State Apprenticeship Agency (where appropriate) to be eligible for probationary employment as an apprentice. The allowable ratio of apprentices to journeymen on the job site in any craft classification shall not be greater than the ratio permitted to the contractor as to the entire work force under the registered program. Any worker listed on a payroll at an apprentice wage rate, who is not registered or otherwise employed as stated above, shall be paid not less than the applicable wage rate on the wage determination for the classification of work actually performed. In addition, any apprentice performing work on the job site in excess of the ratio permitted under the registered program shall be paid not less than the applicable wage rate on the wage determination for the work actually performed. Where a contractor is performing construction on a project in a locality other than that in which its program is registered, the ratios and wage rates (expressed in percentages of the journeyman's hourly rate) specified in the contractor's or subcontractor's registered program shall be observed. Every apprentice must be paid at not less than the rate specified in the registered program for the apprentice's level of progress, expressed as a percentage of the journeymen hourly rate specified in the applicable wage determination. Apprentices shall be paid fringe benefits in accordance with the provisions of the apprenticeship program. If the apprenticeship program does not specify fringe benefits, apprentices must be paid the full amount of fringe benefits listed on the wage determination for the applicable classification. If the WHD Administrator determines that a different practice prevails for the applicable apprentice classification, fringes shall be paid in accordance with that determination. In the event the Office of Apprenticeship Training, Employer and Labor Services, or a State Apprenticeship Agency recognized by the Office, withdraws approval of an apprenticeship program, the contractor will no longer be permitted to utilize apprentices at less than the applicable predetermined rate for the work performed until an acceptable program is approved.

(ii) Trainees. Except as provided in 29 CFR 5.16, trainees will not be permitted to work at less than the predetermined rate for the work performed unless they are employed pursuant to

and individually registered in a program which has received prior approval, evidenced by formal certification by the U.S. Department of Labor, Employment and Training Administration. The ratio of trainees to journeymen on the job site shall not be greater than permitted under the plan approved by the Employment and Training Administration. Every trainee must be paid at not less than the rate specified in the approved program for the trainee's level of progress, expressed as a percentage of the journeyman hourly rate specified in the applicable wage determination. Trainees shall be paid fringe benefits in accordance with the provisions of the trainee program. If the trainee program does not mention fringe benefits, trainees shall be paid the full amount of fringe benefits listed on the wage determination unless the WHD Administrator determines that there is an apprenticeship program associated with the corresponding journeyman wage rate on the wage determination which provides for less than full fringe benefits for apprentices. Any employee listed on the payroll at a trainee rate who is not registered and participating in a training plan approved by the Employment and Training Administration shall be paid not less than the applicable wage rate on the wage determination for the classification of work actually performed. In addition, any trainee performing work on the job site in excess of the ratio permitted under the registered program shall be paid not less than the applicable wage rate on the wage determination for the work actually performed. In the event the Employment and Training Administration withdraws approval of a training program, the contractor will no longer be permitted to utilize trainees at less than the applicable predetermined rate for the work performed until an acceptable program is approved.

(iii) Equal employment opportunity. The utilization of apprentices, trainees and journeymen under this part shall be in conformity with the equal employment opportunity requirements of Executive Order 11246, as amended, and 29 CFR part 30.

(5) Compliance with Copeland Act requirements. The contractor shall comply with the requirements of 29 CFR part 3, which are incorporated by reference in this contract.

(6) Subcontracts. The contractor or subcontractor shall insert in any subcontracts the clauses contained in 29 CFR 5.5(a)(1) through (10) and such other clauses as the EPA may by appropriate instructions require, and also a clause requiring the subcontractors to include these clauses in any lower tier subcontracts. The prime contractor shall be responsible for the compliance by any subcontractor or lower tier subcontractor with all the contract clauses in 29 CFR 5.5.

(7) Contract termination: debarment. A breach of the contract clauses in 29 CFR 5.5 may be grounds for termination of the contract, and for debarment as a contractor and a subcontractor as provided in 29 CFR 5.12.

(8) Compliance with Davis-Bacon and Related Act requirements. All rulings and interpretations of the Davis-Bacon and Related Acts contained in 29 CFR parts 1, 3, and 5 are herein incorporated by reference in this contract.

(9) Disputes concerning labor standards. Disputes arising out of the labor standards provisions of this contract shall not be subject to the general disputes clause of this contract. Such disputes shall be resolved in accordance with the procedures of the Department of Labor set forth in 29 CFR parts 5, 6, and 7. Disputes within the meaning of this clause include disputes between the contractor (or any of its subcontractors) and [name of WIFIA borrower], EPA, the U.S.

Department of Labor, or the employees or their representatives.

(10) Certification of eligibility.

(i) By entering into this contract, the contractor certifies that neither it (nor he or she) nor any person or firm who has an interest in the contractor's firm is a person or firm ineligible to be awarded Government contracts by virtue of section 3(a) of the Davis-Bacon Act or 29 CFR 5.12(a)(1).

(ii) No part of this contract shall be subcontracted to any person or firm ineligible for award of a Government contract by virtue of section 3(a) of the Davis-Bacon Act or 29 CFR 5.12(a)(1).

(iii) The penalty for making false statements is prescribed in the U.S. Criminal Code, 18 U.S.C. 1001.

(b) Contract Work Hours and Safety Standards Act. The following clauses set forth in paragraphs (b)(1), (2), (3), and (4) of this section shall be inserted in full in any contract in an amount in excess of $100,000 and subject to the overtime provisions of the Contract Work Hours and Safety Standards Act. These clauses shall be inserted in addition to the clauses required by § 5.5(a) or § 4.6 of part 4 of this title. As used in this paragraph, the terms laborers and mechanics include watchmen and guards.

(1) Overtime requirements. No contractor or subcontractor contracting for any part of the conract work which may require or involve the employment of laborers or mechanics shall require or permit any such laborer or mechanic in any workweek in which he or she is employedon such work to work in excess of forty hours in such workweek unless such laborer or mechanic receives compensation at a rate not less than one and one-half times the basic rate of pay for all hours worked in excess of forty hours in such workweek.

(2) Violation; liability for unpaid wages; liquidated damages. In the event of any violation of the clause set forth in paragraph (b)(1) of this section the contractor and any subcontractor responsible therefor shall be liable for the unpaid wages. In addition, such contractor and subcontractor shall be liable to the United States (in the case of work done under contract for the District of Columbia or a territory, to such District or to such territory), for liquidated damages. Such liquidated damages shall be computed with respect to each individual laborer or mechanic, including watchmen and guards, employed in violation of the clause set forth inparagraph (b)(1) of this section, in the sum of $25 for each calendar day on which such individual was required or permitted to work in excess of the standard workweek of forty hours without payment of the overtime wages required by the clause set forth in paragraph (b)(1) of this section.

(3) Withholding for unpaid wages and liquidated damages. The [name of WIFIA borrower] shall upon its own action or upon written request of an authorized representative of the Department of Labor, or the EPA, withhold or cause to be withheld, from any moneys payable on account of work performed by the contractor or subcontractor under any such contract or any other Federal contract with the same prime contractor, or any other federally-assisted contract subject to the Contract Work Hours and Safety Standards Act, which is held by the same prime contractor, such sums as may be determined to be necessary to satisfy any liabilities of such contractor or subcontractor for unpaid wages and liquidated damages as provided in the clause set forth in paragraph (b)(2) of this section.

(4) Subcontracts. The contractor or subcontractor shall insert in any subcontracts the clauses set forth in paragraph (b)(1) through (4) of this section and also a clause requiring the subcontractors

to include these clauses in any lower tier subcontracts. The prime contractor shall be responsible for compliance by any subcontractor or lower tier subcontractor with the clauses set forth in paragraphs (b)(1) through (4) of this section.

(c) In addition to the clauses contained in paragraph (b), in any contract subject only to the Contract Work Hours and Safety Standards Act and not to any of the other statutes cited in § 5.1, the contractor or subcontractor shall maintain payrolls and basic payroll records during the course of the work and shall preserve them for a period of three years from the completion of the contractfor all laborers and mechanics, including guards and watchmen, working on the contract. Such records shall contain the name and address of each such employee, social security number, correct classifications, hourly rates of wages paid, daily and weekly number of hours worked, deductions made, and actual wages paid. Further, the EPA shall cause or require the [name of WIFIA borrower] to insert in any such contract a clause providing that the records to be maintained under this paragraph shall be made available by the contractor or subcontractor for inspection, copying, or transcription by authorized representatives of the [name of WIFIA borrower], EPA and the Department of Labor, and the contractor or subcontractor will permit such representatives to interview employees during working hours on the job.

LATEST UPDATES ON FEDERAL REQUIREMENTS

PROHIBITION ON CERTAIN TELECOMMUNICATIONS AND VIDEO SURVEILLANCE SERVICES OR EQUIPMENT

Suggested Contract Language:

Prohibition on Certain Telecommunications and Video Surveillance Services or Equipment (Effective August 13, 2020). The John S. McCain National Defense Authorization Act for Fiscal Year 2019 (P.L. 115-232), at Section 889, prohibits EPA financial assistance recipients, including WIFIA borrowers, from expending loan funds to procure or obtain; extend or renew a contract to procure or obtain; or enter into a contract (or extend or renew a contract) to procure or obtain equipment, services, or systems that use covered telecommunications equipment or services as a substantial or essential component of any system, or as critical technology as part of any system. As described in the Act, "covered telecommunications equipment or services" means:

a) Telecommunications equipment produced by Huawei Technologies Company or ZTE Corporation (or any subsidiary or affiliate of such entities).
b) For the purpose of public safety, security of government facilities, physical security surveillance of critical infrastructure, and other national security purposes, video surveillance and telecommunications equipment produced by Hytera Communications Corporation, Hangzhou Hikvision Digital Technology Company, or Dahua Technology Company (or any subsidiary or affiliate of such entities).
c) Telecommunications or video surveillance services provided by such entities or using such equipment.
d) Telecommunications or video surveillance equipment or services produced or provided by an entity that the Secretary of Defense, in consultation with the Director of the National Intelligence or the Director of the Federal Bureau of Investigation, reasonably believes to be an entity owned or controlled by, or otherwise connected to, the government of a covered foreign country.

The Act does not prohibit:

a) Procuring with an entity to provide a service that connects to the facilities of a third-party, such as backhaul, roaming, or interconnection arrangements.
b) Telecommunications equipment that cannot route or redirect user data traffic or permit visibility into any user data or packets that such equipment transmits or otherwise handles.

REFERENCES

A minimum of three (3) references shall be provided:

1. **Company Name:**

   Address:

   Contact:

   Phone #: Email:

   Contract Value: Year:

   Description:

2. **Company Name:**

   Address:

   Contact:

   Phone #: Email:

   Contract Value: Year:

   Description:

3. **Company Name:**

   Address:

   Contact:

   Phone #: Email:

   Contract Value: Year:

   Description:

4. **Company Name:**

Address:

Contact:

Phone #: Email:

Contract Value: Year:

Description:

5. **Company Name:**

Address:

Contact:

Phone #: Email:

Contract Value: Year:

Description:

DISADVANTAGED BUSINESS ENTERPRISE (DBE) PREFERENCE

Section 2-185, Code of Ordinances of the City of Fort Lauderdale, provides for a disadvantaged business enterprise preference.

In order to be considered for a DBE Preference, a bidder must include a certification from a government agency, as applicable to the DBE Preference class claimed **at the time of bid submittal**.

Upon formal request of the City, based on the application of a DBE Preference the Bidder shall, within **ten (10)** calendar days, submit the following documentation to the DBE Class claimed:

a) Copy of City of Fort Lauderdale current year business tax receipt, **or** Broward County current year business tax receipt, **or** State of Florida active registration **and/or**

b) List of the names of all employees of the bidder and evidence of employees' residences within the geographic bounds of the City of Fort Lauderdale or Broward County, as the case may be, such as current Florida driver license, residential utility bill (water, electric, telephone, cable television), or other type of similar documentation acceptable to the City.

Failure to comply at time of bid submittal shall result in the bidder being found ineligible for the disadvantaged business enterprise preference.

THE COMPLETE DBE PREFERENCE ORDINANCE MAY BE FOUND ON THE CITY'S WEB SITE AT THE FOLLOWING LINK: hp s://library.municode.com/fl/fort_lauderdale/codes/code_of_ordinances?nodeId=COOR_CH2AD_ARTVFI_DIV2PR_S2-185EQOPDIBUEN&showChanges=true

Definitions

a. The term "disadvantaged class 1 enterprise" shall mean any disadvantaged business enterprise that has established and agrees to maintain a permanent place of business located in a non-residential zone, staffed with full-time employees within the limits of the City, and provides supporting documentation of its City of Fort Lauderdale business tax and disadvantaged certification as established in the City's Procurement Manual.

b. The term "disadvantaged class 2 enterprise" shall mean any disadvantaged business enterprise that has established and agrees to maintain a permanent place of business within the limits of the City with full-time employees and provides supporting documentation of its City of Fort Lauderdale business tax and disadvantaged certification as established in the City's Procurement Manual.

c. The term "disadvantaged class 3 enterprise" shall mean any disadvantaged business enterprise that has established and agrees to maintain a permanent place of business located in a non-residential zone, staffed with full-time employees within the limits of the Tri-County area and provides supporting documentation of its City of Fort Lauderdale business tax and disadvantaged certification as established in the City's Procurement Manual.

d. The term "disadvantaged class 4 enterprise" shall mean any disadvantaged business enterprise that does not qualify as a Class 1, Class 2, or Class 3 business, but is located in the State of Florida and provides supporting documentation of its disadvantaged certification as established in the City's Procurement Manual.

DISADVANTAGED BUSINESS ENTERPRISE CERTIFICATION STATEMENT

The Business identified below certifies that it qualifies for the disadvantaged business enterprise preference classification as indicated herein, and further certifies and agrees that it will re-affirm its preference classification annually no later than **thirty (30)** calendar days prior to the anniversary of the date of a contract awarded pursuant to this solicitation. Violation of the foregoing provision may result in contract termination.

(1) _____ (Business Name)

is a disadvantaged **Class 1** enterprise as defined in the City of Fort Lauderdale Ordinance Section 2-185 disadvantaged business enterprise that has established and agrees to maintain a permanent place of business located in a non-residential zone, staffed with full-time employees within the limits of the City, and provides supporting documentation of its City of Fort Lauderdale business tax and disadvantaged certification as established in the City's Procurement Manual.

(2) _____ (Business Name)

is a disadvantaged **Class 2** enterprise as defined in the City of Fort Lauderdale Ordinance Section 2-185 disadvantaged business enterprise that has established and agrees to maintain a permanent place of business within the limits of the City with full-time employee(s) and provides supporting documentation of its City of Fort Lauderdale business tax and disadvantaged certification as established in the City's Procurement Manual.

(3) _____ (Business Name)

is a disadvantaged **Class 3** enterprise as defined in the City of Fort Lauderdale Ordinance Section 2-185 disadvantaged business enterprise that has established and agrees to maintain a permanent place of business located in a non-residential zone, staffed with full-time employees within the limits of the Tri-County area and provides supporting documentation of its City of Fort Lauderdale business tax and disadvantaged certification as established in the City's Procurement Manual.

(4) _____ (Business Name)

is a disadvantaged **Class 4** enterprise as defined in the City of Fort Lauderdale Ordinance Section 2-185 disadvantaged business enterprise that does not qualify as a Class 1, Class 2, or Class 3 business, but is located in the State of Florida and provides supporting documentation of its disadvantaged certification as established in the City's Procurement Manual.

(5) _____ (Business Name)

requests a **Conditional Class 1** classification as defined in the City of Fort Lauderdale Ordinance No. C-17-26, Sec.2-186. Written certification of intent to meet the requirements shall be provided to the City within three (3) months of entering into a contract with the City.

(6) _____ (Business Name)

requests a **Conditional Class 2** classification as defined in the City of Fort Lauderdale Ordinance No. C-17-26, Sec.2-186. Written certification of intent to meet the requirements shall be provided to the City within three (3) months of entering into a contract with the City.

BIDDER'S COMPANY: _____

AUTHORIZED COMPANY PERSON: _____ _____ _____

PRINT NAME SIGNATURE DATE

Forms Non-Iso – revised 7/2/2021

NON-COLLUSION STATEMENT:

By signing this offer, the vendor/contractor certifies that this offer is made independently and *free* from collusion. Vendor shall disclose below any City of Fort Lauderdale, FL officer or employee, or any relative of any such officer or employee who is an officer or director of, or has a material interest in, the vendor's business, who is in a position to influence this procurement.

Any City of Fort Lauderdale, FL officer or employee who has any input into the writing of specifications or requirements, solicitation of offers, decision to award, evaluation of offers, or any other activity pertinent to this procurement is presumed, for purposes hereof, to be in a position to influence this procurement.

For purposes hereof, a person has a material interest if they directly or indirectly own more than 5 percent of the total assets or capital stock of any business entity, or if they otherwise stand to personally gain if the contract is awarded to this vendor.

In accordance with City of Fort Lauderdale, FL Policy and Standards Manual, 6.10.8.3,

> 3.3. City employees may not contract with the City through any corporation or business entity in which they or their immediate family members hold a controlling financial interest (e.g. ownership of five (5) percent or more).
>
> 3.4. Immediate family members (spouse, parents and children) are also prohibited from contracting with the City subject to the same general rules.

Failure of a vendor to disclose any relationship described herein shall be reason for debarment in accordance with the provisions of the City Procurement Code.

NAME	RELATIONSHIPS

In the event the vendor does not indicate any names, the City shall interpret this to mean that the vendor has indicated that no such relationships exist.

Authorized Signature

Title

Name (Printed)

Date

CONTRACTOR'S CERTIFICATE OF COMPLIANCE WITH NON-DISCRIMINATION PROVISIONS OF THE CONTRACT

The completed and signed form should be returned with the Contractor's submittal. If not provided with submittal, the Contractor must submit within three business days of City's request. Contractor may be deemed non-responsive for failure to fully comply within stated timeframes.

Pursuant to City Ordinance Sec. 2-187(c), bidders must certify compliance with the Non-Discrimination provision of the ordinance.

The Contractor shall not, in any of his/her/its activities, including employment, discriminate against any individual on the basis of race, color, national origin, religion, creed, sex, disability, sexual orientation, gender, gender identity, gender expression, or marital status.

1. The Contractor certifies and represents that he/she/it will comply with Section 2-187, Code of Ordinances of the City of Fort Lauderdale, Florida, as amended by Ordinance C-18-33 (collectively, "Section 2-187").

2. The failure of the Contractor to comply with Section 2-187 shall be deemed to be a material breach of this Agreement, entitling the City to pursue any remedy stated below or any remedy provided under applicable law.

3. The City may terminate this Agreement if the Contractor fails to comply with Section 2-187.

4. The City may retain all monies due or to become due until the Contractor complies with Section 2-187.

5. The Contractor may be subject to debarment or suspension proceedings. Such proceedings will be consistent with the procedures in section 2-183 of the Code of Ordinances of the City of Fort Lauderdale, Florida.

Authorized Signature

Print Name and Title

Date

E-VERIFY AFFIRMATION STATEMENT

RFP/Bid /Contract No:

Project Description:

Contractor/Proposer/Bidder acknowledges and agrees to utilize the U.S. Department of Homeland Security's E-Verify System to verify the employment eligibility of,

(a) all persons employed by Contractor/Proposer/Bidder to perform employment duties within Florida during the term of the Contract, and,

(b) all persons (including subcontractors/vendors) assigned by Contractor/Proposer/Bidder to perform work pursuant to the Contract.

The Contractor/Proposer/Bidder acknowledges and agrees that use of the U.S. Department of Homeland Security's E-Verify System during the term of the Contract is a condition of the Contract.

Contractor/Proposer/ Bidder Company Name:

Authorized Company Person's Signature:

Authorized Company Person's Title:

Date:

9/15/2020

BID/PROPOSAL CERTIFICATION

Please Note: It is the sole responsibility of the bidder to ensure that his bid is submitted electronically through www.BidSync.com prior to the bid opening date and time listed. Paper bid submittals will not be accepted. All fields below must be completed. If the field does not apply to you, please note N/A in that field.

If you are a foreign corporation, you may be required to obtain a certificate of authority from the department of state, in accordance with Florida Statute §607.1501 (visit http://www.dos.state.fl.us/).

Company: (Legal Registration) _____ EIN (Optional): _____

Address: _____

City: _____ State: _____ Zip: _____

Telephone No.: _____ FAX No.: _____ Email: _____

Delivery: Calendar days after receipt of Purchase Order **(section 1.02 of General Conditions)**: _____

Total Bid Discount **(section 1.05 of General Conditions)**: _____

Check box if your firm qualifies for MBE / SBE / WBE **(section 1.09 of General Conditions)**: ☐

ADDENDUM ACKNOWLEDGEMENT - Proposer acknowledges that the following addenda have been received and are included in the proposal:

Addendum No.	Date Issued	Addendum No.	Date Issued	Addendum No.	Date Issued

---

VARIANCES: If you take exception or have variances to any term, condition, specification, scope of service, or requirement in this competitive solicitation you must specify such exception or variance in the space provided below or reference in the space provided below all variances contained on other pages within your response. Additional pages may be attached if necessary. No exceptions or variances will be deemed to be part of the response submitted unless such is listed and contained in the space provided below. The City does not, by virtue of submitting a variance, necessarily accept any variances. If no statement is contained in the below space, it is hereby implied that your response is in full compliance with this competitive solicitation. If you do not have variances, simply mark N/A. **You must also click the "Take Exception" button.**

The below signatory hereby agrees to furnish the following article(s) or services at the price(s) and terms stated subject to all instructions, conditions, specifications addenda, legal advertisement, and conditions contained in the bid/proposal.

I have read all attachments including the specifications and fully understand what is required. By submitting this signed proposal, I will accept a contract if approved by the City and such acceptance covers all terms, conditions, and specifications of this bid/proposal. The below signatory also hereby agrees, by virtue of submitting or attempting to submit a response, that in no event shall the City's liability for respondent's direct, indirect, incidental, consequential, special or exemplary damages,

expenses, or lost profits arising out of this competitive solicitation process, including but not limited to public advertisement, bid conferences, site visits, evaluations, oral presentations, or award proceedings exceed the amount of Five Hundred Dollars ($500.00). This limitation shall not apply to claims arising under any provision of indemnification or the City's protest ordinance contained in this competitive solicitation.

Submitted by:

Name (printed)	Signature
Date	Title

Revised 4/28/2020

Question and Answers for Bid #12632-626 - Consultant Services for Melrose Manors Neighborhood Stormwater Improvements

Overall Bid Questions

There are no questions associated with this bid.

ERROR: cannot process PDF document doc_9521863.pdf

TRENCH SAFETY

Bidder acknowledges that included in the appropriate bid items of his bid and in the Total Bid Price are costs for complying with the Florida Trench Safety Act, Florida Statutes 553.60 – 553.64. The bidder further identifies the costs of such compliance to be summarized below:

Trench Safety Measure (Description)	Units of Measure (LF/SF)	Unit (Quantity)	Unit Cost	Extended Cost
A.			$	$
B.			$	$
C.			$	$
D.			$	$
			Total: $	

The bidder certifies that all trench excavation done within his control in excess of five feet (5') in depth shall be in accordance with the Occupational Safety and Health Administration's excavation safety standards, C.F.R. s. 1926.650 Subpart P., and the Florida Trench Safety Act, Florida Statutes 553.60-553.64.

Failure to complete the above may result in the bid being declared non-responsive.

DATE: _____ _____

(SIGNATURE)

STATE OF: _____ COUNTY OF: _____

PERSONALLY APPEARED BEFORE ME, the undersigned authority,

_____

(Name of Individual Signing)

_____ who, after first being duly sworn by me,

_____ affixed his/her signature in the space provided above on this

_____ day of _____, 20_____.

_____

NOTARY PUBLIC

My Commission Expires: _____

NON-COLLUSION STATEMENT:

By signing this offer, the vendor/contractor certifies that this offer is made independently and *free* from collusion. Vendor shall disclose below any City of Fort Lauderdale, FL officer or employee, or any relative of any such officer or employee who is an officer or director of, or has a material interest in, the vendor's business, who is in a position to influence this procurement.

Any City of Fort Lauderdale, FL officer or employee who has any input into the writing of specifications or requirements, solicitation of offers, decision to award, evaluation of offers, or any other activity pertinent to this procurement is presumed, for purposes hereof, to be in a position to influence this procurement.

For purposes hereof, a person has a material interest if they directly or indirectly own more than 5 percent of the total assets or capital stock of any business entity, or if they otherwise stand to personally gain if the contract is awarded to this vendor.

In accordance with City of Fort Lauderdale, FL Policy and Standards Manual, 6.10.8.3,

> 3.3. City employees may not contract with the City through any corporation or business entity in which they or their immediate family members hold a controlling financial interest (e.g. ownership of five (5) percent or more).
>
> 3.4. Immediate family members (spouse, parents and children) are also prohibited from contracting with the City subject to the same general rules.

Failure of a vendor to disclose any relationship described herein shall be reason for debarment in accordance with the provisions of the City Procurement Code.

NAME	RELATIONSHIPS

In the event the vendor does not indicate any names, the City shall interpret this to mean that the vendor has indicated that no such relationships exist.

Authorized Signature

Title

Name (Printed)

Date

CONTRACT PAYMENT METHOD

The City of Fort Lauderdale has implemented a Procurement Card (P-Card) program which changes how payments are remitted to its vendors. The City has transitioned from traditional paper checks to credit card payments via MasterCard or Visa as part of this program.

This allows you as a vendor of the City of Fort Lauderdale to receive your payments fast and safely. No more waiting for checks to be printed and mailed.

In accordance with the contract, payments on this contract will be made utilizing the City's P-Card (MasterCard or Visa). Accordingly, bidders must presently have the ability to accept these credit cards or take whatever steps necessary to implement acceptance of a card before the start of the contract term, or contract award by the City.

All costs associated with the Contractor's participation in this purchasing program shall be borne by the Contractor. The City reserves the right to revise this program as necessary.

By signing below you agree with these terms.

Please indicate which credit card payment you prefer:

☐ MasterCard

☐ Visa

Company Name

Name (Printed)

Signature

Date

Title

CONTRACTOR'S CERTIFICATE OF COMPLIANCE WITH NON-DISCRIMINATION PROVISIONS OF THE CONTRACT

The completed and signed form should be returned with the Contractor's submittal. If not provided with submittal, the Contractor must submit within three business days of City's request. Contractor may be deemed non-responsive for failure to fully comply within stated timeframes.

Pursuant to City Ordinance Sec. 2-187(c), bidders must certify compliance with the Non-Discrimination provision of the ordinance.

The Contractor shall not, in any of his/her/its activities, including employment, discriminate against any individual on the basis of race, color, national origin, religion, creed, sex, disability, sexual orientation, gender, gender identity, gender expression, or marital status.

1. The Contractor certifies and represents that he/she/it will comply with Section 2-187, Code of Ordinances of the City of Fort Lauderdale, Florida, as amended by Ordinance C-18-33 (collectively, "Section 2-187").

2. The failure of the Contractor to comply with Section 2-187 shall be deemed to be a material breach of this Agreement, entitling the City to pursue any remedy stated below or any remedy provided under applicable law.

3. The City may terminate this Agreement if the Contractor fails to comply with Section 2-187.

4. The City may retain all monies due or to become due until the Contractor complies with Section 2-187.

5. The Contractor may be subject to debarment or suspension proceedings. Such proceedings will be consistent with the procedures in section 2-183 of the Code of Ordinances of the City of Fort Lauderdale, Florida.

Authorized Signature

Print Name and Title

Date

BID/PROPOSAL CERTIFICATION

Please Note: It is the sole responsibility of the bidder to ensure that his bid is submitted electronically through www.BidSync.com prior to the bid opening date and time listed. Paper bid submittals will not be accepted. All fields below must be completed. If the field does not apply to you, please note N/A in that field.

If you are a foreign corporation, you may be required to obtain a certificate of authority from the department of state, in accordance with Florida Statute §607.1501 (visit http://www.dos.state.fl.us/).

Company: (Legal Registration) _____ EIN (Optional): _____

Address: _____

City: _____ State: _____ Zip: _____

Telephone No.: _____ FAX No.: _____ Email: _____

Delivery: Calendar days after receipt of Purchase Order **(section 1.02 of General Conditions)**: _____

Total Bid Discount **(section 1.05 of General Conditions)**: _____

Check box if your firm qualifies for MBE / SBE / WBE **(section 1.09 of General Conditions)**: ☐

ADDENDUM ACKNOWLEDGEMENT - Proposer acknowledges that the following addenda have been received and are included in the proposal:

Addendum No.	Date Issued	Addendum No.	Date Issued	Addendum No.	Date Issued

---

VARIANCES: If you take exception or have variances to any term, condition, specification, scope of service, or requirement in this competitive solicitation you must specify such exception or variance in the space provided below or reference in the space provided below all variances contained on other pages within your response. Additional pages may be attached if necessary. No exceptions or variances will be deemed to be part of the response submitted unless such is listed and contained in the space provided below. The City does not, by virtue of submitting a variance, necessarily accept any variances. If no statement is contained in the below space, it is hereby implied that your response is in full compliance with this competitive solicitation. If you do not have variances, simply mark N/A. **You must also click the "Take Exception" button.**

The below signatory hereby agrees to furnish the following article(s) or services at the price(s) and terms stated subject to all instructions, conditions, specifications addenda, legal advertisement, and conditions contained in the bid/proposal.

I have read all attachments including the specifications and fully understand what is required. By submitting this signed proposal, I will accept a contract if approved by the City and such acceptance covers all terms, conditions, and specifications of this bid/proposal. The below signatory also hereby agrees, by virtue of submitting or attempting to submit a response, that in no event shall the City's liability for respondent's direct, indirect, incidental, consequential, special or exemplary damages,

expenses, or lost profits arising out of this competitive solicitation process, including but not limited to public advertisement, bid conferences, site visits, evaluations, oral presentations, or award proceedings exceed the amount of Five Hundred Dollars ($500.00). This limitation shall not apply to claims arising under any provision of indemnification or the City's protest ordinance contained in this competitive solicitation.

Submitted by:

Name (printed)	Signature
Date	Title

Revised 4/28/2020

Bidder shall submit a list of minimum three projects completed in the last five years of similar scope and scale (or larger) and shall, for each project listed, identify location; dates of construction; project name and overall scope; scope of work that was self-performed by Contractor; and client's name, address, telephone number and e-mail address

Note: Do not include proposed team members or parent/subsidiary companies as references in your submittals.

A. PRIME BIDDER'S NAME: _____

CLIENT NO.1 - Name of firm to be contacted: _____

Address: _____

Contact Person: _____

Phone No: (___) _____

Contact E-Mail Address: _____

Project Performance Period: _____ to _____
Dates should be in mm/yy format

Project Name : _____

Location of Project: _____

Overall Construction Cost: _____

Description of the overall scope: _____

_____

_____

_____

_____

Description of work that was self-performed by Bidder:

_____

_____

_____

_____

CLIENT NO.2 - Name of firm to be contacted: _____

Address: _____

Contact Person: _____

Phone No: (___) _____

Contact E-Mail Address: _____

Project Performance Period: _____ to _____
Dates should be in mm/yy format

Project Name : _____

Location of Project: _____

Overall Construction Cost: _____

Description of the overall scope: _____

_____

_____

_____

_____

Description of work that was self-performed by Bidder:

_____

_____

_____

_____

_____

_____

CLIENT NO.3 - Name of firm to be contacted: _____

Address: _____

Contact Person: _____

Phone No: (___) _____

Contact E-Mail Address: _____

Project Performance Period: _____ to _____
Dates should be in mm/yy format

Project Name : _____

Location of Project: _____

Overall Construction Cost: _____

Description of the overall scope: _____

_____

_____

_____

_____

Description of work that was self-performed by Bidder:

_____

_____

_____

_____

_____

_____

CONSTRUCTION BID CERTIFICATION

Please Note: It is the sole responsibility of the bidder to ensure that his bid is submitted electronically through www.BidSync.com prior to the bid opening date and time listed. Paper bid submittals will not be accepted. All fields below must be completed. If the field does not apply to you, please note N/A in that field.

If you are a foreign corporation, you may be required to obtain a certificate of authority from the Department of State, in accordance with Florida Statute §607.1501 (visit http://www.dos.state.fl.us/).

Company: (Legal Registration)

Address:

City: State: Zip:

Telephone No.: FAX No.: Email:

Check box if your firm qualifies for MBE / SBE / WBE: ☐

If a corporation, state the name of the President, Secretary and Resident Agent. If a partnership, state the names of all partners. If a trade name, state the names of the individuals who do business under the trade name.

Name	Title	Name	Title
Name	**Title**	**Name**	**Title**

ADDENDUM ACKNOWLEDGEMENT - Bidder acknowledges that the following addenda have been received and are included in the proposal:

Addendum No.	Date Issued	Addendum No.	Date Issued	Addendum No.	Date Issued

---

VARIANCES: If you take exception or have variances to any term, condition, specification, or requirement in this bid you must specify such variance in the space provided below or reference in the space provided below all variances contained on other pages within your bid. Additional pages may be attached if necessary. No variances will be deemed to be part of the bid submitted unless such is listed and contained in the space provided below. The City does not, by virtue of submitting a variance, necessarily accept any variances. If no statement is contained in the below space, it is hereby implied that your response is in full compliance with this competitive solicitation. If you do not have variances, simply mark N/A. **You must also click the "Take Exception" button.**

The below signatory affirms that he has or will obtain all required permits and licenses from the appropriate agencies, and that his firm is authorized to do business in the State of Florida. The below signatory agrees to furnish all labor, tools, material, equipment and supplies, and to sustain all the expense incurred in doing the work set forth in strict accordance with the bid plans and contract documents at the unit prices indicated if awarded a contract. The below signatory has not divulged to, discussed, or compared this bid with other bidders, and has not colluded with any other bidder or parties to this bid whatsoever. Furthermore, the undersigned guarantees the truth and accuracy of all statements and answers contained in this bid. The below signatory also hereby agrees, by virtue of submitting or attempting to submit a bid, that in no event shall the City's liability for bidder's direct, indirect, incidental, consequential, special or exemplary damages, expenses, or lost profits arising out of this competitive solicitation process, including but not limited to public advertisement, bid conferences, site visits, evaluations, oral presentations, or award proceedings exceed the amount of Five Hundred Dollars ($500.00). This limitation shall not apply to claims arising under any provision of indemnification or the City's protest ordinance contained in this competitive solicitation.

Submitted by:

Name (printed) Signature

Date Title

Revised 4/28/2020

GENERAL CONDITIONS

Unless otherwise modified in the Project's Special Conditions, the following General Conditions shall be part of the Contract:

GC – 01 – DEFINITIONS – The following words and expressions, or pronouns used in their stead, shall wherever they appear in the Contract the Contract Documents, be construed as follows:

"Addendum" or "Addenda" – shall mean the additional Contract provisions issued in writing, by the Engineer, prior to the receipt of bids.

"Bid" – shall mean the offer or proposal of the Bidder submitted on the prescribed form setting forth the prices for the Work to be performed.

"Bidder" – shall mean any person, firm, company, corporation or entity submitting a bid for the Work.

"Bonds" – shall mean bid, performance and payment bonds and other instruments of security, furnished by Contractor and his surety in accordance with the Contract Documents.

"City" – shall mean the city of Fort Lauderdale, Florida, a Florida municipal corporation. In the event the City exercises its regulatory authority as a government body, the exercise of such regulatory authority and the enforcement of any rules, regulations, codes, laws and ordinances shall be deemed to have occurred pursuant to City's authority as a governmental body and shall not be attributable in any manner to the City as a party to this Contract.

"Consultant" – shall mean a person, firm, company, corporation or other entity employed by the City to perform the professional services for the project.

"Contractor" – shall mean the successful Bidder who has been employed by the City to perform the construction and related services for the project.

"Contract Work" – shall mean everything expressed or implied to be required to be furnished and furnished by the Contractor by any one or more of the parts of the Contract Documents referred to in the Contract hereof. In the case of any inconsistency in or between any parts of this Contract, the Project Manager shall determine which shall prevail.

"Design Documents" – shall mean the construction plans and specifications included as part of a Bid/Proposal Solicitation prepared by the City or by the Consultant under a separate Agreement with the City.

"Engineer" – shall include the terms "professional engineer" and "licensed engineer" and means a person who is licensed to engage in the practice of engineering under Florida Statute, Chapter 471. An Engineer may be a City employee or a consultant hired by the City.

"Extra Work" – shall mean work other than that required by the Contract.

"Inspector" – shall mean an authorized representative of the City assigned to make necessary inspections of materials furnished by Contractor and of the Work performed by Contractor.

GENERAL CONDITIONS (continued)

"Notice" – shall mean written notice sent by certified United States mail, return receipt requested, or sent by commercial express carrier with acknowledgement of delivery, or via fax or email, or by hand delivery with a request for a written receipt of acknowledgement of delivery and shall be served upon the Contractor either personally or to its place of business listed in the Bid.

"Owner" – shall mean the City of Fort Lauderdale.

"Project Manager" – shall mean a professional designated by the City to manage the Project under the supervision and direction of the Public Works Director or designee.

"Site" – shall mean the area upon or in which the Contractor's operations are carried out and such other areas adjacent thereto as may be designated as such by the Project Manager.

"Sub-Contractor" – shall mean any person, firm, company, corporation or other entity, other than employees of the Contractor, who or which contracts with the contractor, to furnish, or actually furnishes labor and materials, or labor and equipment, or labor, materials and equipment at the site.

"Surety" – shall mean any corporation or entity that executes, as Surety, the Contractor's performance and payment bond securing the performance of this Contract.

GC – 02 – SITE INVESTIGATION AND REPRESENTATION – The Contractor acknowledges that it has satisfied itself as to the nature and location of the Work under the Contract Documents, the general and local conditions of the Site, particularly those bearing upon availability of transportation, disposal, handling and storage of materials, availability of labor, water, electric power, and roads, field conditions, the type of equipment and facilities needed preliminary to and during the prosecution of the Work and all other matters which can in any way affect the Work or the cost thereof under the Contract Documents.

The Contractor acknowledges that it has conducted extensive tests, examinations and investigations and represents and warrants a thorough familiarization with the nature and extent of the Contract Documents, the Work, locality, soil conditions, moisture conditions and all year-round local weather and climate conditions (past and present), and, in reliance on such test, examination and investigations conducted by Contractor and the Contractor's experts, has determined that no conditions exist that would in any manner affect the Bid Price and that the project can be completed for the Bid Price submitted.

Any failure by the Contractor to acquaint itself with all the Site conditions shall not relieve Contractor from responsibility for properly estimating the difficulty of cost thereof under the Contract Documents.

GC – 03 - SUBSTITUTIONS – If the Contractor desires to use materials and/or products of manufacturer's names different from those specified in the Contract Documents, the Bidder requesting the substitution shall make written application as described herein. The burden of proving the equality of the proposed substitution rests on the Contractor making the request. To be acceptable, the proposed substitution shall meet or exceed all expressed requirements of the Contract Documents and shall be submitted upon the Contractor's letterhead. The following requirements shall be met in order for the substitution to be considered.

GENERAL CONDITIONS (continued)

1. Requests substitution shall be accompanied by such technical data, as the party making the request desires to submit. The Project Manager will consider reports from reputable independent testing laboratories, verified experience records from previous users and other written information valid in the circumstances; and

2. Requests for substitution shall completely and clearly indicate in what respects the materials and/or products differ from those indicated in the Contract Documents; and

3. Requests for substitution shall be accompanied by the manufacturer's printed recommendations clearly describing the installation, use and care, as applicable, or the proposed substitutions; and

4. Requests for substitution shall be accompanied by a complete schedule of changes in the Contract Documents, if any, which must be made to permit the use of the proposed substitution.

   If a proposed substitution is approved by the Project Manager, an addendum will be issued to prospective bidders not less than three (3) working days prior to the date set for opening of bids. Unless substitutions are received and approved as described above, the successful Bidder shall be responsible for furnishing materials and products in strict accordance with the Contract Documents.

GC – 04 – CONSTRUCTION RESOURCES – Contract shall provide all labor and equipment necessary to complete the installation within a timely manner. Contractor shall provide details as to manpower and equipment to be dedicated to the project in its Work Plan Contractor is responsible for making arrangements, obtaining and purchasing construction water services if required to complete the work.

GC – 05 – CONTROL OF THE WORK – The Project Manager shall have full control and direction of the Work in all respects. The Project Manager and/or his authorized designee(s) shall, at all times, have the right to inspect the Work and materials. The Contractor shall furnish all reasonable facilities for obtaining such information, as the Project Manager may desire respecting the quality of the Work and materials and the manner of conducting the Work. Should the Contractor be permitted to perform night Work, or to vary the period which work is ordinarily carried on in the daytime, he shall give ample notice to the Project Manager so that the proper and adequate inspection may be provided. Such Work shall be done only under such regulations as are furnished in writing by the Project Manager, and no extra compensation shall be allowed to the Contractor therefore. In the event of night work, the Contractor shall furnish such light, satisfactory to the Project Manager, as will ensure proper inspection. Nothing herein contained shall relieve the Contractor from compliance with any and all City ordinances relating to noise or Work during prohibited hours.

GC – 06 – SUB-CONTRACTOR – The Contractor shall not sublet, in whole or any part of the Work without the written consent and approval of the Project Manager. Within ten (10) days after official notification of starting date, the Contractor must submit in writing, to the Project Manager, a list of all Sub-contractors. No Work shall be done by any sub-contractor until such Sub-contractor has been officially approved by the Project Manager. A sub-contractor not appearing on the original list will not be approved without written request submitted to the Project Manager and approved by the Public Works Director. In all cases, the Contractor shall give his personal attention to the Work of the Sub-contractors and the Sub-contractor is liable to be discharged by the Contractor, at the direction of the Project Manager, for neglect of duty, incompetence or misconduct.

Acceptance of any sub-contractor, other person, or organization by the Project Manager shall not constitute a waiver of any right of Project Manager to reject defective Work or Work not in conformance with the Contract Documents.

GENERAL CONDITIONS (continued)
Contractor shall be fully responsible for all acts and omissions of its Sub-contractors and of persons and organizations directly or indirectly employed by them and of persons and organizations for whose acts any of them may be liable to the same extent that he is responsible for the acts and omissions of persons directly employed by him. Nothing in the Contract Documents shall create any contractual relationship between City and any sub-contractor or other person or organization having a direct contract with Contractor, nor shall it create any obligation on the part of City to pay or to see to the payment of any moneys due to any sub-contractor or other person, or organization, except as may otherwise be required by law.

GC – 07 – QUANTITIES – Contractor recognizes and agrees that the quantities shown on plans and Bid/Price Schedule are estimates only and may vary during actual construction. No change shall be made involving any departure from the general scheme of the Work and that no such change involving a material change in cost, either to the City or Contractor, shall be made, except upon written permission of the City. However, the Project Manager shall have the right to make minor alterations in the line, grade, plan, form or materials of the Work herein contemplated any time before the completion of the same. That if such alterations shall diminish the quantity of the Work to be done, such alterations shall not constitute a claim for damages or anticipated profits. That if such alterations increase the amount of the Work to be done, such increase shall be paid for according to the quantity actually performed and at the unit price or prices stipulated therefore in the Contract. The City shall, in all cases of dispute, determine the amount or quantity of the several kinds of Work which are to be paid for under this Contract, and shall decide all questions relative to the execution of the same, and such estimates and decisions shall be final and binding.

Any Work not herein specified, which might be fairly implied as included in the Contract, of which the City shall judge, shall be done by the Contractor without extra charge. However, such cost increases shall be authorized either by the Public Works Director or designee, or the City Commission based upon the purchasing threshold amounts provided for in Chapter 2 of the City of Fort Lauderdale's Code of Ordinances.

GC – 08 – NO ORAL CHANGES – Except to the extent expressly set forth in the Contract, no change in, or modification, termination or discharge of the Contract in any form whatsoever, shall be valid or enforceable unless it is in writing and signed by the parties charged, therewith or their duly authorized representative.

GC – 09 – PERMITS AND PROTECTION OF PUBLIC – Permits on file with the City and/or those permits to be obtained by the Contractor shall be considered directive in nature, and will be considered a part of this Contract. A copy of all permits shall be given to the City and become part of the Contract Documents. Terms of permits shall be met prior to acceptance of the Work and release of the final payment.

Contractor shall secure all permits and licenses required for completing the Project. Contractor will obtain the necessary State, County, and City construction/work permits if required.

The Contractor shall comply with all applicable Codes, Standards, Specifications, etc. related to all aspects of the Project.

Where there are telephones, light or power poles, water mains, conduits, pipes or drains or other construction, either public or private, in or on the streets or alleys, the Work shall be so conducted that no interruption or delay will be caused in the operation or use of the same. Proper written notice shall be given to all affected parties prior to proceeding with the Work.

GENERAL CONDITIONS (continued)
The Contractor shall not be permitted to interfere with public travel and convenience by grading or tearing up streets indiscriminately, but the Work of constructing the various items in this contract shall proceed in an orderly, systematic and progressive manner.

GC – 10 – DISEASE REGULATIONS – The Contractor shall enforce all sanitary regulations and take all precautions against infectious diseases as the Project Manager may deem necessary. Should any infectious or contagious diseases occur among his employees, he shall arrange for the immediate removal of the employee from the Site and isolation of all persons connected with the Work.

GC -11- CONTRACTOR TO CHECK PLANS, SPECIFICATIONS, AND DATA – The Contractor shall verify all dimensions, quantities, and details shown on the plans, supplementary drawings, schedules, and shall notify the Project Manager of all errors, omissions, conflicts and discrepancies found therein with three (3) working days of discovery. Failure to discover or correct errors, conflictions, or discrepancies shall not relieve the Contractor of full responsibility for unsatisfactory Work, faulty construction, or improper operation resulting therefrom nor from rectifying such condition at its own expense.

GC – 12 – MATERIALS AND WORKMANSHIP – All material shall be new and the workmanship shall, in every respect, be in conformity with approved modern practice and with prevailing standards of performance and quality. In the event of a dispute, the Project Manager's decision shall be final. Wherever the Plans, Specifications, Contract Documents, or the directions of the Project Manager are unclear as to what is permissible and/or fail to note the quality of any Work, that interpretation will be made by the Project Manager, which is in accordance with approved modern practice, to meet the particular requirements of the Contract.

GC – 13 – SAFEGUARDING MARKS - The Contractor shall safeguard all points, stakes, grade marks, monuments, and benchmarks made or established on the Work, bear the cost of re-establishing same if disturbed, or bear the entire expense of rectifying Work improperly installed due to not maintaining or protecting or for removing without authorization, such established points, stakes, and marks. The Contractor shall safeguard all existing and known property corners, monuments and marks not related to the Work and, if required, shall bear the cost of having them re-established by a licensed Professional surveyor registered in the State of Florida if disturbed or destroyed during the course of construction.

GC – 14 – RESTROOM FACILITIES – Contractor shall provide portable toilet facilities for employee's use at a location within the Work site to be determined by the City.

GC – 15 – PROGRESS MEETINGS – Weekly Status meetings will be conducted with representatives from the City and the Contractor. Contract shall budget time to participate in such meetings. A well-run Project should result in short meetings.

GC – 16 – ISSUE RESOLUTION – Should Contractor become engaged in a dispute with a resident or a City employee, the Contractor shall report the situation to the Project Manager immediately. It shall be mandatory that the City participate in any dispute resolution. Failure of Contractor personnel to notify the City shall obligate Contractor to replace the offending employee immediately if requested by the City.

GENERAL CONDITIONS (continued)

GC – 17 – CITY SECURITY-CONTRACTOR AND SUBCONTRACTOR EMPLOYEE INFORMATION – Prior to commencing work, Contractor shall provide to the City a list of all personnel and sub-contractors on site. The list will include the name, address, birth date and driver's license number for all personnel. All personnel and subcontractors on site will have on their person a company photo ID during all stages of the construction. Contractor shall provide standard required personal information per current City procedures.

GC – 18 – POST-CONTSTRUCTION SURVEY – The Contractor shall provide as-built survey, sealed and signed by a registered surveyor in the State of Florida, as a condition of final payment.

GC – 19 – KEY PERSONNEL – Contractor shall provide as part of the Work Plan, resumes for all key project personnel providing supervision and project management functions. Resumes shall include work history and years of experience performing this type of work.

GC – 20 – EXISTING UTILITY SERVICE – All existing utility service shall be maintained with a minimum of interruption at the expense of the Contractor.

GC – 21 – JOB DESCRIPTION SIGNS – Contractor, at Contractor's expense, shall furnish, erect, and maintain suitable weatherproof signs on jobs over $100,000 containing the following information:

1. City Seal (in colors)
2. Project or Improvement Number
3. Job Description
4. Estimated Cost
5. Completion Date

Minimum size of sign shall be four feet high, eight feet wide and shall be suitably anchored. The entire sign shall be painted and present a pleasing appearance. Exact location of signs will be determined in the field. Two (2) signs will be required, one at each end of the job. All costs of this work shall be included in other parts of the work.

GC – 22 – FLORIDA EAST COAST RIGHT-OF-WAY – Whenever a City contractor is constructing within the Florida East Coast Railway Company's Right-of-Way, it will be mandatory that the contractor carry bodily injury and property damage insurance in amounts satisfactory to the Florida East Coast Company. This insurance requirement shall be verified by the contractor with the Florida East Coast Company prior to commencing work, and maintained during the life of the Contract.

GC – 23 – ACCIDENTS – The Contractor shall provide such equipment and facilities as are necessary and/or required, in the case of accidents, for first aide services to be provided to a person who may be injured during the project duration. The Contractor shall also comply with the OSHA requirements as defined in the United States Labor Code 29 CFR 1926.50.

In addition, the Contractor must report immediately to the Project Manager every accident to persons or damage to property, and shall furnish in writing full information, including testimony of witnesses regarding any and all accidents.

GC – 24 – SAFETY PRECAUTIONS – Contractor must adhere to the applicable environmental protection guidelines for the duration of a project. If hazardous waste materials are used, detected or generated at any time, the Project Manager must be immediately notified of each and every occurrence. The Contractor shall comply with all codes, ordinance, rules, orders and other legal requirements of public authorities (including OSHA, EPA, DERM, the City, Broward County, State of Florida, and Florida Building Code), which bear on the performance of the Work.

GENERAL CONDITIONS (continued)
The Contractor shall take the responsibility to ensure that all Work is performed using adequate safeguards, including but not limited to: proper safe rigging, safety nets, fencing, scaffolding, barricades, chain link fencing, railings, barricades, steel plates, safety lights, and ladders that are necessary for the protection of its employees, as well as the public and City employees. All riggings and scaffolding shall be constructed with good sound materials, of adequate dimensions for their intended use, and substantially braced, tied or secured to ensure absolute safety for those required to use it, as well as those in the vicinity. All riggings, scaffolding, platforms, equipment guards, trenching, shoring, ladders and similar actions or equipment shall be OSHA approved, as applicable, and in accordance with all Federal, State and local regulations.

GC - 25 – DUST PREVENTION – The Contractor shall, by means of a water spray, or temporary asphalt pavement, take all necessary precautions to prevent or abate a dust nuisance arising from dry weather or Work in an incomplete stage. All costs of this Work shall be included in the cost of other parts of the Work.

Should the Contractor fail to abate a dust nuisance the Project Manager may stop the Work until the issue is resolved to the City's satisfaction.

GC – 26 – SITE CLEANUP AND RESTORATION – The Contractor shall remove all debris and unused or discarded materials from the work site daily. Contractor shall clean the work site to remove all directional drilling "Driller's Mud" materials. No "Driller's Mud" residue shall be allowed to remain in the soil or on the surface of the land or vegetation. All debris and drilling materials must be disposed of offsite at an approved location. The Contractor shall promptly restore all areas disturbed that are outside the Project limits in equal or better condition at no additional cost to the City.

GC – 27 – COURTEOUS BEHAVIOR AND RESPECT FOR RESIDENTS AND PROPERTY – The Contractor and its employees, associates and sub-contractors shall maintain courteous behavior at all times and not engage in yelling, loud music, or other such activities. Contractor's employees shall not leave trash or other discarded items at the Work Site, especially on any private property. In the event complaints arise, Contractor shall immediately remove such offending employees from the project if requested to do so by the Project Manager. Contractor's employees shall not trespass on any private property unless necessary to complete the work but with prior permission from the owner.

Contractor shall notify and obtain permission from the residents 24 hours in advance when planning to work within the resident's property. In addition, Contractor shall notify the resident prior to entering their property to perform work or inspect/investigate the work site. Contractor shall not block residents' driveways unnecessarily. Contractor shall not park equipment on landscaped areas when the vehicle is not needed for the current construction activities. Contractor shall be responsible for repair and/or replacement of all damaged landscaping within 48 hours including repairing vehicle wheel impressions, irrigation systems, lighting systems, structures, or any other items of resident's property. Contractor shall not destroy, damage, remove, or otherwise negatively impact any landscaping within or outside the right-of-way without prior approval from the Project Manager.

GENERAL CONDITIONS (continued)

GC – 28 – PLACING BARRICADES AND WARNING LIGHTS – The Contractor shall furnish and place, at Contractor's own expense, all barricades, warning lights, automatic blinker lights and such devices necessary to properly protect the work and vehicular and pedestrian traffic. Should the Contractor fail to erect or maintain such barricades, warning lights, etc., the Project Manager may, after 24 hours' notice to the Contractor, proceed to have such barricades and warning lights placed and maintained by City or other forces and all costs incurred thereof charged to the Contractor and may be retained by the City from any monies due, or to become due, to the Contractor.

GC – 29 – TRAFFIC CONTROL – The Contractor shall coordinate all Work and obtain, through the City's Transportation and Mobility Department, Broward County, Florida Department of Transportation, as applicable, any permits required to detour traffic or close any street before starting to work in the road.

All traffic control devices, flashing lights, signs and barricades shall be maintained in working condition at all times and conform to Manual of Uniform Traffic Control Devices (MUTCD), latest edition.

GC – 30 – COORDINATION – The Contractor shall notify all utilities, transportation department, etc., in writing, with a copy to the Project Manager before construction is started and shall coordinate its Work with them. The Contractor shall cooperate with the owners of any underground or overhead utility lines in their removal, construction and rearrangement operations in order that services rendered by these parties will not be unnecessarily interrupted.

The Contractor shall arrange its Work and dispose of its materials so as to not interfere with the operation of other contractors engaged upon adjacent work, and to join its Work to that of others in a proper manner, and to perform its Work in the proper sequence in relation to that of other contractors as may be directed by the Project Manager.

Each Contractor shall be responsible for any damage done by its agents to the work performed by another contractor.

GC – 31 – WATER – Bulk water used for construction, flushing pipelines, and testing shall be obtained from fire hydrants. Contractor shall make payment for hydrant meter at Treasury Billing Office, 1st Floor, City Hall, 100 N. Andrews Avenue. With the paid receipt, contractor can pick up hydrant meter at the utility location office. No connection shall be made to a fire hydrant without a meter connected.

GC – 32 – PROHIBITION AGAINST CONTRACTING WITH SCRUTINIZED COMPANIES – As to any contract for goods or services of $1 million or more and as to the renewal of any contract for goods or services of $1 million or more, subject *Odebrecht Construction, Inc., v. Prasad,* 876 F.Supp.2d 1305 (S.D. Fla. 2012), *affirmed, Odebrecht Construction, Inc., v. Secretary, Florida Department of Transportation,* 715 F.3d 1268 (11th Cir. 2013), with regard to the "Cuba Amendment," the Contractor certifies that it is not on the Scrutinized Companies with Activities in Sudan List or the Scrutinized Companies with Activities in the Iran Petroleum Energy Sector List, and that it does not have business operations in Cuba or Syria, as provided in Section 2877.135, Florida Statutes (2021), as may be amended or revised. As to any contract for goods or services of any amount and as to the renewal of any contact for goods or services of any amount, the Contractor certifies that it is not on the Scrutinized Companies that Boycott Israel List created pursuant to Section 215.4725, Florida Statutes (2021), as may be amended or revised, and that it is not engaged in a boycott of Israel. The City may terminate this Agreement at the City's option if the Contractor is found to have submitted a false certification as provided under subsection (5) of Section 287.135, Florida Statutes (2021), as may be amended or revised, or been placed on the Scrutinized Companies with Activities in Sudan List or the Scrutinized Companies with Activities in the Ira Petroleum Energy Sector List or the Scrutinized Companies that Boycott Israel List created pursuant to Section 215.4725, Florida Statutes (2021), as may be amended or revised, or is engaged in a boycott of Israel, or has been engaged in business operations in Cuba or Syria, as defined in Section 287.135, Florida Statutes (2021), as may be amended or revised.

GENERAL CONDITIONS (continued)

GC – 33 – USE OF FLORIDA LUMBER TIMBER AND OTHER FOREST PRODUCTS – In accordance with Florida Statute 255.20 (3), the City specifies that lumber, timber, and other forest products used for this Project shall be produced and manufactured in the State of Florida if such products are available and their price, fitness, and quality are equal. This requirement does not apply to plywood specified for monolithic concrete forms, if the structural or service requirements for timber for a particular job cannot be supplied by native species, or if the construction is financed in whole or in part from federal funds with the requirement that there be no restrictions as to species or place of manufacture.

The Bidder affirms by submitting a response to this solicitation that they will comply with section 255.20 (3) Florida Statutes.

GC – 34 – PUBLIC RECORDS/TRADE SECRETS/COPYRIGHT: The Proposer's response to the Solicitation is a public record pursuant to Florida law, which is subject to disclosure by the City under the State of Florida Public Records Law, Florida Statutes Chapter 119.07 ("public Records Law"). The City shall permit public access to all documents, papers, letters or other material submitted in connection with this Solicitation and the Contract to be executed for this Solicitation, subject to the provisions of Chapter 119.07 of the Florida Statutes.

Any language contained in the Proposer's response to the Solicitation purporting to require confidentiality of any portion of the Proposer's response to the Solicitation, except to the extent that certain information is in the City's opinion a Trade Secret pursuant to Florida law, shall be void. If a Proposer submits any documents or other information to the City which the Proposer claims is Trade Secret information and exempt from Florida Statutes Chapter 119.07 ("Public Records Laws"), the Proposer shall clearly designate that it is a Trade Secret and that it is asserting that the document or information is exempt. The Proposer must specifically identify the exemption being claimed under Florida Statutes 119.07. The City shall be the final arbiter of whether any information contained in the Proposer's response to the Solicitation constitutes a Trade Secret. The City's determination of whether an exemption applies shall be final, and the proposer agrees to defend, indemnify, and hold harmless the City and the City's officers, employees, and agent, against any loss or damages incurred by any person or entity as a result of the City's treatment of records as public records. In addition, the proposer agrees to defend, indemnify and hold harmless the City and the City's officers, employees, and agents, against any loss or damages incurred by any person or entity as a result of the City's treatment of records as exempt from disclosure or confidential. Proposals purposing to be subject to copyright protection in full or in part will be rejected. The proposer authorizes the City to publish, copy and reproduce any and all documents submitted to the City bearing copyright symbols or otherwise purporting to be subject to copyright protection.

IF THE CONTRACTOR HAS QUESTIONS REGARDING THE APPLICATION OF CHAPTER 119, FLORIDA STATUTES, TO THE CONTRACTOR'S DUTY TO PROVIDE PUBLIC RECORDS RELATING TO THIS AGREEMENT, CONTACT THE CUSTODIAN OF PUBLIC RECORDS AT:

Telephone Number: **(954) 828-5002**

Mailing Address: **City Clerk's Office**
100 N. Andrews Avenue
Fort Lauderdale, Florida 33301-1016

E-mail: **prrcontract@fortlauderdale.gov**

GENERAL CONDITIONS (continued)
Contractor shall:

1. Keep and maintain public records required by the City in order to perform the service.

2. Upon request from the City's custodian of public records, provide the City with a copy of the requested records or allow the records to be inspected or copied within a reasonable time at a cost that does not exceed the cost provided in Chapter 119, Florida Statutes (2021), as may be amended or revised, or as otherwise provided by law.

3. Ensure that public records that are exempt or confidential and exempt from public records disclosure requirements are not disclosed except as authorized by law from the duration of the contract term and following completion of this Agreement if the Contractor does not transfer the records to the City.

4. Upon completion of the Agreement, transfer, at no cost, to the City all public records in possession of the Contractor or keep and maintain public records required by the City to perform the service. If the Contractor transfers all public records to the City upon completion of this Agreement, the Contractor shall destroy any duplicate public records that are exempt or confidential and exempt from public records disclosure requirements. If the Contractor keeps and maintains public records upon completion of this Agreement, the Contractor shall meet all applicable requirements for retaining public records. All records stored electronically must be provided to the City, upon request from the City's custodian of public records, in a format that is compatible with the information technology systems of the City.

E-VERIFY AFFIRMATION STATEMENT

RFP/Bid /Contract No:

Project Description:

Contractor/Proposer/Bidder acknowledges and agrees to utilize the U.S. Department of Homeland Security's E-Verify System to verify the employment eligibility of,

(a) all persons employed by Contractor/Proposer/Bidder to perform employment duties within Florida during the term of the Contract, and,

(b) all persons (including subcontractors/vendors) assigned by Contractor/Proposer/Bidder to perform work pursuant to the Contract.

The Contractor/Proposer/Bidder acknowledges and agrees that use of the U.S. Department of Homeland Security's E-Verify System during the term of the Contract is a condition of the Contract.

Contractor/Proposer/ Bidder Company Name:

Authorized Company Person's Signature:

Authorized Company Person's Title:

Date:

9/15/2020

City of Fort Lauderdale • Procurement Services Division 100 N. Andrews Avenue, 619 • Fort Lauderdale, Florida 33301
954-828-5933 Fax 954-828-5576
purchase@fortlauderdale.gov

ITB NO. 12712-123

River Oaks Pumpstations Project 12745

ADDENDUM NO. 1

ISSUED: July 25, 2022

This Addendum is being issued to provide the following information. It is hereby made a part of the Plans and Specifications and shall be included with all contract documents.

Acknowledge receipt of this Addendum by inserting its number and date on the CITB Construction Bid Certification Page.

A) Payment for this project will be done by check.

All other terms, conditions, and specifications remain unchanged.

Fausto Vargas
Senior Procurement Specialist

Company Name: _____
(please print)

Bidder's Signature: _____

Date: _____

City of Fort Lauderdale • Procurement Services Division

100 N. Andrews Avenue, 619 • Fort Lauderdale, Florida 33301
954-828-5933 Fax 954-828-5576
purchase@fortlauderdale.gov

ITB NO. 12712-123
Public Works Department Engineering Division
River Oaks Pump Stations (P12745)

ADDENDUM NO. 2

ISSUED: August 15, 2022

This Addendum is being issued to provide the following information. It is hereby made a part of the Plans and Specifications and shall be included with all contract documents.

Acknowledge receipt of this Addendum by inserting its number and date on the CITB Construction Bid Certification Page.

1. Bid opening will be extended to **Friday September 2/2022.**

2. Specifications and drawings corrections.

Words in ~~**bold strikethrough**~~ type are deletions from existing text. Words in **bold underlined** type are additions to existing text.

A list and description of Specification revisions made under Addendum No. 1 is detailed below:

1. Section 11420 – MECHANICAL SCREENS

    a. Paragraph 2.03 A (4) – The unit shall be supported and anchored on the operating floor and rest on the bottom of the channel. Additional "mid-level" supports shall be provided within the screen channel, as required. ~~**Field welding of stainless-steel supports is prohibited.**~~ **Field welding at anchor plates is permitted as recommended by the manufacturer. All welding shall be in accordance with American Welding Society (AWS) Standard D1.1. All field welding shall be performed by AWS Certified Welders (CW) and shall be inspected by an AWS Certified Welding Inspector (CWI). Shop drawing submittals shall include AWS CW and AWS CWI qualifications. Inspection reports completed and certified by the AWS CWI shall be submitted to the Engineer prior to commencing start up activities. The Contractor shall include the cost of welding inspections within its bid price.**

ADDENDUM No. 2

ITB NO. 12545-613
P11842

b. Paragraph 2.03 G (2) – Screen motors shall be capable of meeting all loads over the entire operating speed range without exceeding the name plate horsepower rating of the motor. Motors shall be **1/2-HP** ~~**1/4-HP**~~, 1800-RPM, 3-Phase, 60-Hertz, 460 Volt AC, inverter duty rated. Motor enclosures shall be TEFC, washdown rated. Insulation shall be **Class F**, ~~**Class H**~~, with Class B temperature rise. Furnish with motor winding temperature switches and space heaters

c. Paragraph 2.04 C (2) – A variable frequency drive (VFD) shall be provided in the screen control panel for control of the screen belt drive system. **VFD shall be as recommended by screen manufacturer and** ~~**. VFD**~~ shall be an Allen Bradley PowerFlex ~~**40**~~ by Rockwell Automation or equivalent by Schneider Electric, ABB or Engineer approved equal.

d. Paragraph 2.05 D (1) – When a water depth of 2-ft (adjustable parameter) is detected within the screen channel by the existing PLC-SS12 via the ultrasonic level detector, the screen shall operate continuously at an adjustable ~~**high**~~ **low** preset speed, as set in the screen's VFD.

e. Paragraph 2.05 D (2) - When a high channel level (adjustable) is detected from the level signal, the screen shall automatically ramp down to a ~~**low**~~ **high** preset speed (adjustable parameter), as set in the VFD. The screen shall continue to run at low speed until the high level has subsided and at this time the screen shall resume its high-speed operation.

f. Paragraph 3.02 D – After alignment is correct, grout using high grade non-shrink grout **if grout is required**.

g. Paragraph 3.02 F – ~~**Field welding of stainless steel is prohibited**~~.

2. Section 02481 – Tree Relocation and Protection

   a. Paragraph 3.03 D – Digging and Handling ~~**– Broadleaf Trees:**~~

3. Section 15000 – Basic Mechanical Requirements

   a. Paragraph 2.06 D - Couplings shall be provided with manufacturer's fusion bonded epoxy painting system. ~~**shop primed with a premium quality primer compatible with the painting system specified in Section 09900 - Painting. Field painting of wetted area shall be done prior to installation.**~~

   b. Paragraph 2.06 F – Couplings shall be as manufactured by Smith-Blair Model 411, Romac Industries Model 400, ~~**Dresser Industries, Style 38**~~, or equal as required and shown on the Drawings. All couplings shall be provided without interior pipe stop.

4. Section 16000 – Basic Electrical Requirements

   a. Paragraph 1.03 B: The Contractor is responsible for coordinating all electric utility equipment installations with the serving electric utility. The Contractor shall furnish and

ADDENDUM No. 2

ITB NO. 12545-613
P11842

install all electric utility equipment required by the electric utility to be installed by the Contractor whether specifically shown on the Drawings or not. The Contractor shall furnish and install the following electrical utility equipment as a minimum:

1. ~~**Service conductor ductbank**~~
2. ~~**Metering cabinets and/or bases**~~
3. ~~**Service conductors**~~
4. ~~**Service conductor terminations at service entrance equipment**~~
5. ~~**Primary conductor conduit (install only)**~~

1. **Outfall PS**
   a. **FPL primary conduit duct bank between FPL pole and the Outfall PS. FPL will supply conduit for Contractor to install in duct bank.**
   b. **Outfall PS FPL metering cabinets and/or bases; via FPL requirements.**
   c. **The Contractor shall coordinate with FPL for transformer base requirements.**

2. **Inlet PS**
   a. **FPL Secondary (480V, 3PH) service duct-bank, conduit, and conductors between the Inlet pump station and pole mounted FPL transformers. Coordinate locations with FPL.**
   b. **Contractor shall provide all service conductor terminations at Inlet PS service entrance equipment.**
   c. **Outfall PS FPL metering cabinets and/or bases; via FPL requirements.**

b. Paragraph 1.03 C: The electric utility will furnish and install the following equipment:
   1. ~~**Primary conductors and terminations**~~
   2. ~~**Service conductor terminations at utility power pole**~~

   1. **Outfall PS**
      a. **FPL service transformer**
      b. **FPL shall supply primary wiring conduits to be installed by the Contractor**
      c. **Primary service conductors and terminations between the FPL service pole and the FPL transformer**

   2. **Inlet PS**
      a. **FPL service transformers at the service pole**
      b. **Service conductor terminations at pole mounted FPL transformers utility power pole**

Plans:

The drawings listed below have been revised and shall be replaced in their entirety. All revisions have been clouded.

ADDENDUM No. 2

ITB NO. 12545-613
P11842

1. Sheet 1C-02 Proposed Site Plan – Outfall Station
2. Sheet 1C-03 Yard Piping Plan – Outfall Station
3. Sheet 2C-03 Yard Piping Plan – Inlet Station
4. Sheet 1M-01 Effluent Box and Wet Well Upper Plan
5. Sheet 1M-02 Effluent Box and Wet Well Lower Plan
6. Sheet 1M-03 Effluent Box and Wet Well Section – Sheet 1
7. Sheet GM-01 Standard Mechanical Details – Sheet 1
8. Sheet GM-02 Standard Mechanical Details – Sheet 2
9. Sheet S-01 Structural Notes – Sheet 1
10. Sheet 1S-04 Wetwell Sections Sheet 1 – Outfall Station
11. Sheet 1S-09 Electrical Building – Plans and Section – Outfall Station
12. Sheet 1S-10 Electrical Building Schedules – Outfall Station
13. Sheet 1S-11 Transformer Pad – Outfall Station
14. Sheet 1A-01 Electrical Building Code, Plan and Section
15. Sheet E-03 Overall Electrical Site Plan
16. Sheet 1E-01 Site Plan – Outfall Station
17. Sheet 1H-02 Electrical Building – Outfall Station - Schedules

All other terms, conditions, and specifications remain unchanged.

Fausto Vargas

Sr. Procurement Specialist

Company Name: _____
(please print)

Bidder's Signature: _____

Date: _____

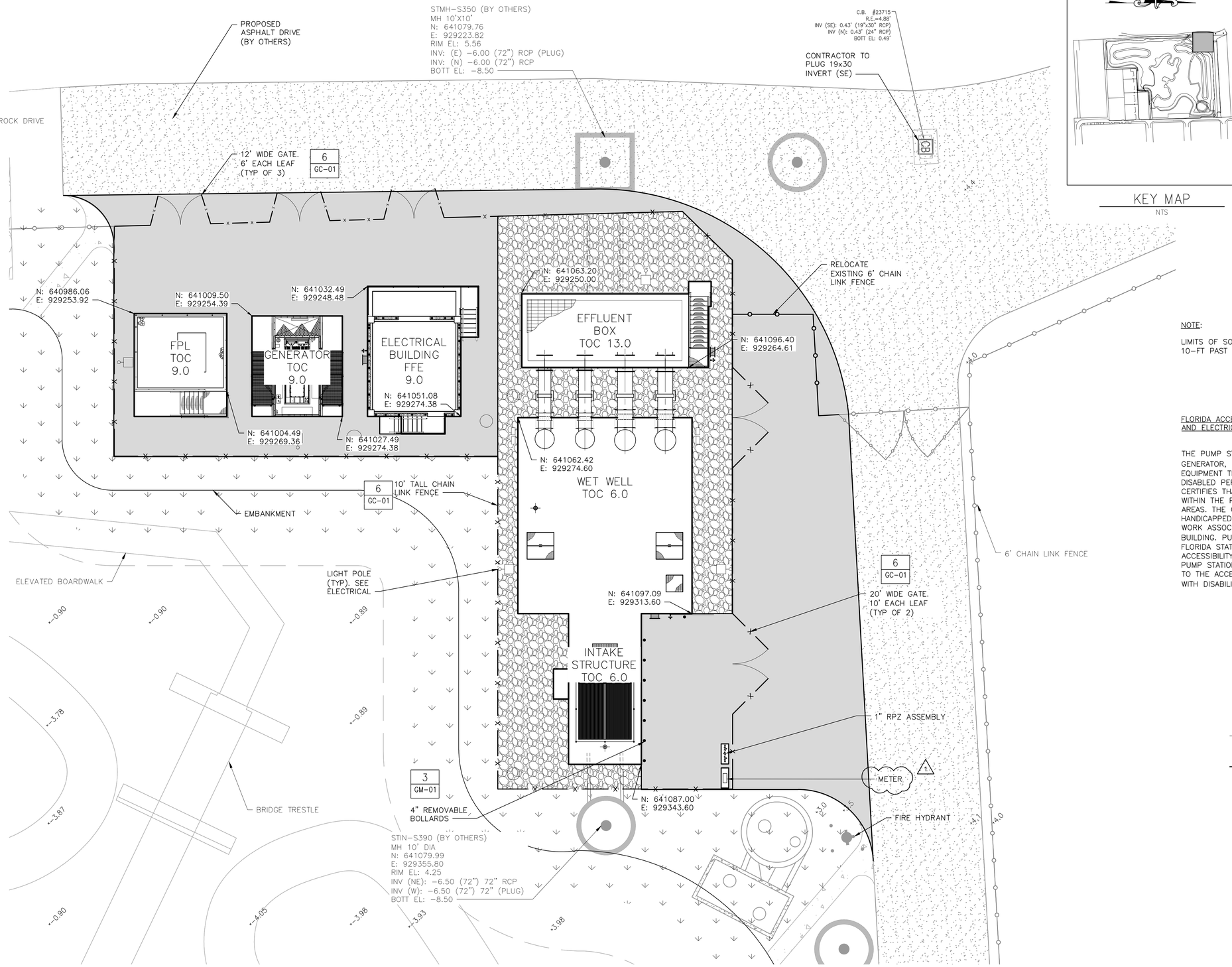

PLAN
1"=10'-0"

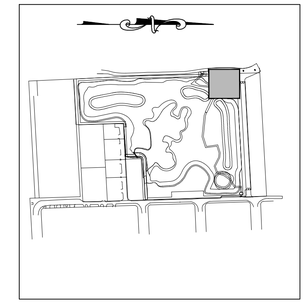

KEY MAP
NTS

Hazen

HAZEN AND SAWYER
4000 HOLLYWOOD BLVD, SUITE 750N
HOLLYWOOD, FLORIDA 33021

NOTE:

LIMITS OF SODDING SHALL EXTEND MINIMUM 10-FT PAST TOP OF EMBANKMENT.

FLORIDA ACCESSIBILITY CODE EXEMPTION FOR PUMP STATION AND ELECTRICAL BUILDING:

THE PUMP STATION AND ELECTRICAL BUILDING (E.G., PUMPS, GENERATOR, ETC.) INCLUDE MECHANICAL AND ELECTRICAL EQUIPMENT THAT CANNOT BE REASONABLY OPERATED BY DISABLED PERSONS. THE CITY OF FORT LAUDERDALE CERTIFIES THAT ONLY CITY UTILITY EMPLOYEES WILL WORK WITHIN THE PUMP STATION AND ELECTRICAL BUILDING AREAS. THE CITY OF FORT LAUDERDALE CERTIFIES THAT HANDICAPPED PERSONS CANNOT REASONABLY PERFORM THE WORK ASSOCIATED WITH THE PUMP STATION AND ELECTRICAL BUILDING. PURSUANT TO CHAPTER 553.504(1) OF THE FLORIDA STATUTES AND ARTICLE 203.5 OF THE "FLORIDA ACCESSIBILITY CODE FOR BUILDING CONSTRUCTION", THE PUMP STATION AND ELECTRICAL BUILDING ARE NOT SUBJECT TO THE ACCESSIBILITY REQUIREMENTS OF THE AMERICANS WITH DISABILITIES ACT (ADA).

LEGEND:

- EXISTING
- PROPOSED
- EXISTING 6" CHAIN LINK FENCE
- PROPOSED 10" CHAIN LINK FENCE
- ASPHALT
- BAHIA SOD
- PROPOSED ASPHALT DRIVE (BY OTHERS
- #57 STONE

0 10' 20'

BID DOCUMENTS

ENGINEER: JENNIFER N. MCMAHON
REG. No: 56800
DATE: 05/12/22
TEL: 954-987-0066
FAX: 954-987-2949

DRAWN BY: RVB	DATE: 05/12/22
DESIGNED BY: JNM	SCALE: 1"=10'
CHECKED BY: JJF	
FIELD BOOK: XXXX	

CITY OF FORT LAUDERDALE
PUBLIC WORKS DEPARTMENT
ENGINEERING & ARCHITECTURE
100 North Andrews Avenue, Fort Lauderdale, Florida 33301

REVISIONS

NO.	DATE	BY	CHK'D	DESCRIPTION
1	8/11/22	JMB	JNM	ADDENDUM 2

PROJECT # 12745
STORMWATER IMPROVEMENTS
RIVER OAKS PUMP STATIONS
PROPOSED SITE PLAN - OUTFALL STATION

SHEET NO.
1C-02

TOTAL: 85

CAD FILE: 12745-1C02

DRAWING FILE NO. 4-142-97

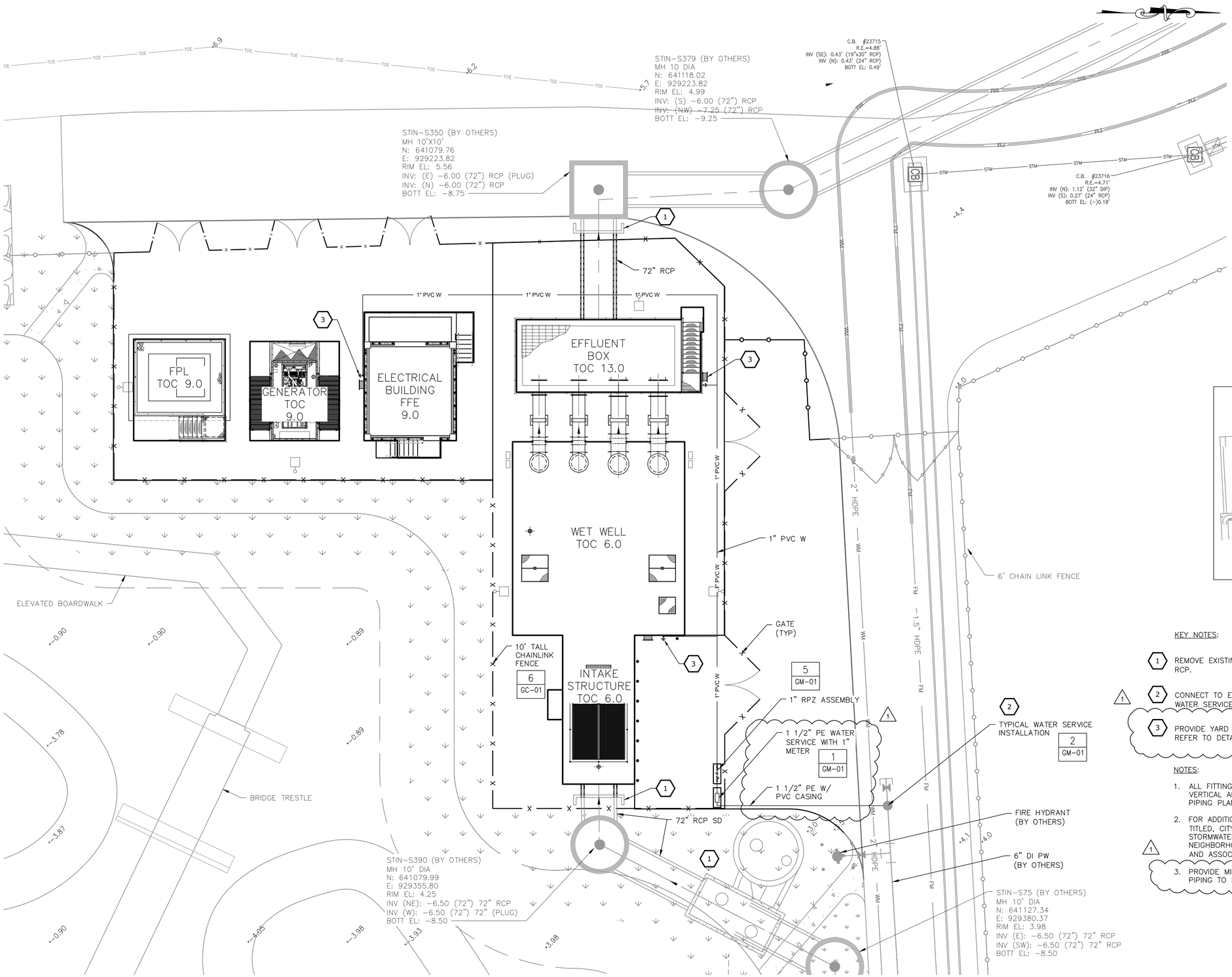

PLAN
1"=10'-0"

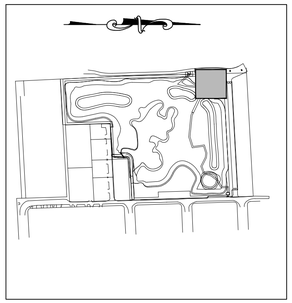

KEY MAP
NTS

KEY NOTES:

1. REMOVE EXISTING PLUG AND CONNECT TO EXISTING 72" RCP.
2. CONNECT TO EXISTING CORPORATION STOP FOR 2" PVC WATER SERVICE.
3. PROVIDE YARD HYDRANT, HOSE RACK AND HOSE STATION. REFER TO DETAILS 7 THROUGH 10 ON GM-02.

NOTES:

1. ALL FITTINGS THAT MAY BE REQUIRED TO MAKE UP VERTICAL ALIGNMENT MAY NOT BE SHOWN ON YARD PIPING PLANS.
2. FOR ADDITIONAL INFORMATION, REFER TO BID PLANS TITLED, CITY OF FORT LAUDERDALE PROJECT #11868 STORMWATER IMPROVEMENTS RIVER OAKS NEIGHBORHOOD AS PREPARED BY CRAVEN THOMPSON AND ASSOCIATES, INC DATED 01/17/2019.
3. PROVIDE MINIMUM 30" OF COVER FOR WATER SERVICE PIPING TO PUMP STATION UNLESS NOTED OTHERWISE.

LEGEND:

EXISTING

PROPOSED

0 10' 20'

BID DOCUMENTS

Hazen

HAZEN AND SAWYER
4000 HOLLYWOOD BLVD, SUITE 750N
HOLLYWOOD, FLORIDA 33021

ENGINEER: JENNIFER N. MCMAHON
REG. No: 56400
DATE: 05/12/22
TEL: 954-987-0066
FAX: 954-987-2949

DRAWN BY: TRB	DATE: 05/12/22
DESIGNED BY: JNM	SCALE: 1"=10'
CHECKED BY: JJF	
FIELD BOOK: XXXX	

CITY OF FORT LAUDERDALE
PUBLIC WORKS DEPARTMENT
ENGINEERING & ARCHITECTURE
100 North Andrews Avenue, Fort Lauderdale, Florida 33301

REVISIONS

NO.	DATE	BY	CHK'D	DESCRIPTION
1	8/11/22	JMB	JNM	ADDENDUM 2

PROJECT # 12745
STORMWATER IMPROVEMENTS
RIVER OAKS PUMP STATIONS
YARD PIPING PLAN - OUTFALL STATION

SHEET NO.
1C-03

TOTAL: 85

CAD FILE: 12745-1C03

DRAWING FILE NO. 4-142-97

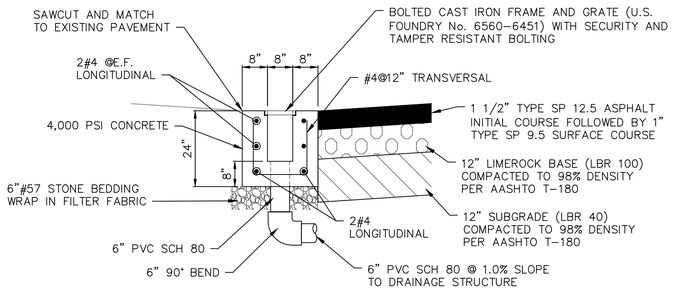

TRENCH DRAIN

DETAIL	1
NTS	–

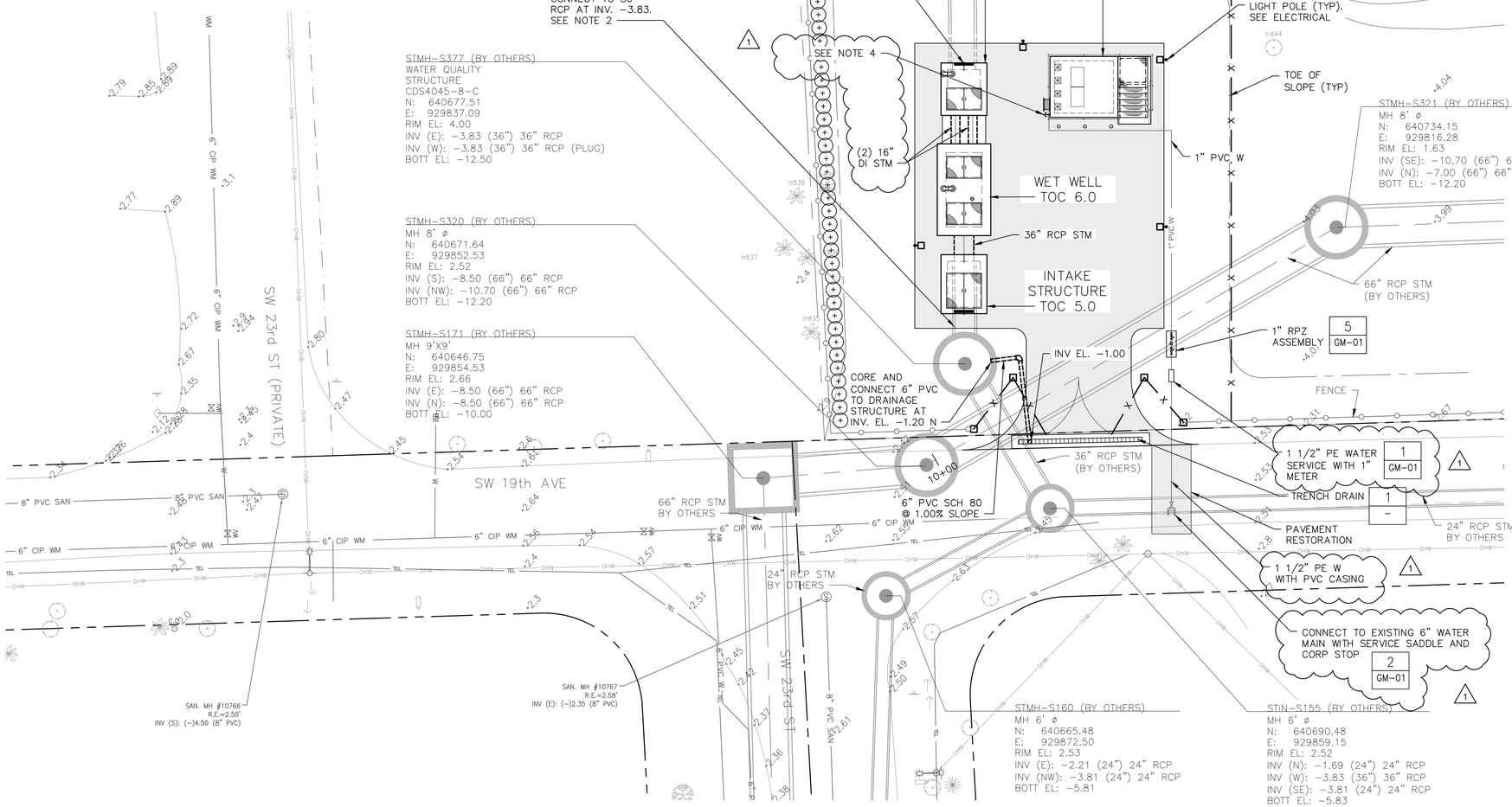

PLAN
1"=10'-0"

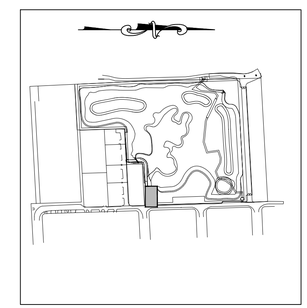

KEY MAP
NTS

NOTES:

1. REFER TO 2C-04 PAVING & GRADING PLAN FOR COMPLETE SITE GRADING.
2. FOR ADDITIONAL INFORMATION, REFER TO BID PLANS TITLED, CITY OF FORT LAUDERDALE PROJECT #11868 STORMWATER IMPROVEMENTS RIVER OAKS NEIGHBORHOOD AS PREPARED BY CRAVEN THOMPSON AND ASSOCIATES, INC DATED 01/17/2019.
3. PROVIDE MINIMUM 30" COVER FOR WATER SERVICE PIPING UNLESS NOTED OTHERWISE.
4. PROVIDE YARD HYDRANT, HOSE RACK, AND HOSE STATION. REFER TO DETAIL 7 THROUGH 10 ON GM-02.

LEGEND:

EXISTING

PROPOSED

FLOW DIRECTION

0 10' 20'

BID DOCUMENTS

Hazen

HAZEN AND SAWYER
4000 HOLLYWOOD BLVD, SUITE 750N
HOLLYWOOD, FLORIDA 33021

ENGINEER: JENNIFER N. MCMAHON
REG. No: 56400
DATE: 05/12/22
TEL: 954-987-0066
FAX: 954-987-2949

DRAWN BY: RVT	DATE: 05/12/22
DESIGNED BY: JMC	SCALE: 1"=10'
CHECKED BY: JJF	FIELD BOOK: XXXX

CITY OF FORT LAUDERDALE
PUBLIC WORKS DEPARTMENT
ENGINEERING & ARCHITECTURE
100 North Andrews Avenue, Fort Lauderdale, Florida 33301

REVISIONS

NO.	DATE	BY	CHK'D	DESCRIPTION
1	8/11/22	JMB	JNM	ADDENDUM 2

PROJECT # 12745
STORMWATER IMPROVEMENTS
RIVER OAKS PUMP STATIONS
YARD PIPING PLAN - INLET STATION

SHEET NO.
2C-03

TOTAL: 85

CAD FILE: 12745-2C03

DRAWING FILE NO. 4-142-97

Hazen

HAZEN AND SAWYER
4000 HOLLYWOOD BLVD, SUITE 750N
HOLLYWOOD, FLORIDA 33021

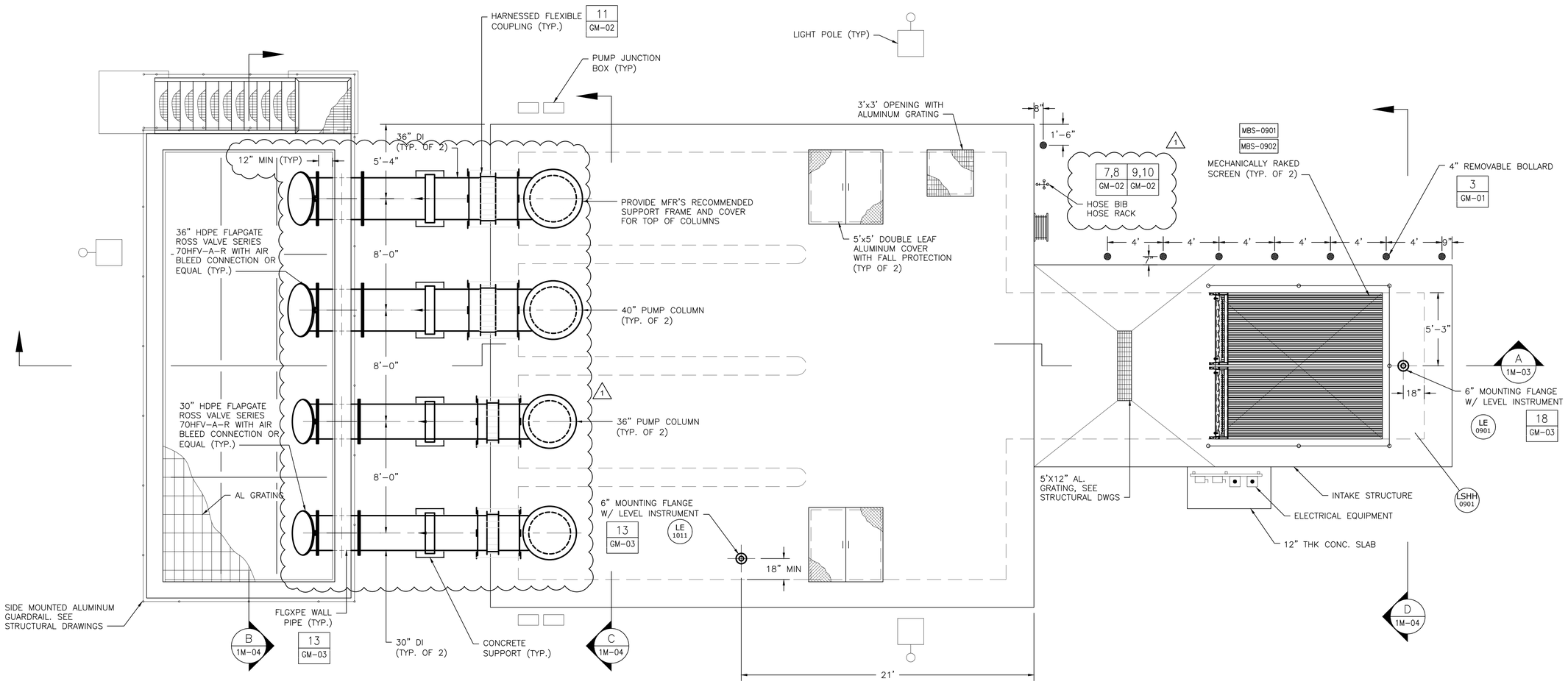

TOP PLAN
1/4" = 1'-0"

NOTES:

1. BASIS OF DESIGN SHOWN IS FLYGT SUBMERSIBLE COLUMN PUMPS. CONTRACTOR SHALL COORDINATE PUMPS, PIPING LAYOUT, AND WET WELL DIMENSIONS WITH ACTUAL EQUIPMENT SUPPLIED. ANY REQUIRED MODIFICATIONS SHALL BE INCLUDED IN CONTRACTOR'S BID PRICE.
2. MODIFICATIONS TO LAYOUT SHALL BE APPROVED BY ENGINEER.
3. DIMENSIONS MARKED WITH A * MAY VARY BASED ON EQUIPMENT FURNISHED

1/4"=1'-0"

1 0 1 2 3 7'

BID DOCUMENTS

ENGINEER: JENNIFER N. MCMAHON
REG. No: 56800
DATE: 05/12/22
TEL: 954-987-0066
FAX: 954-987-2949

DRAWN BY: RVB	DATE: 05/12/22
DESIGNED BY: JNM	SCALE: 1/4"=1'-0"
CHECKED BY: JJF	FIELD BOOK: XXXX

CITY OF FORT LAUDERDALE
PUBLIC WORKS DEPARTMENT
ENGINEERING & ARCHITECTURE
100 North Andrews Avenue, Fort Lauderdale, Florida 33301

REVISIONS

NO.	DATE	BY	CHK'D	DESCRIPTION
1	8/11/22	JMB	JNM	ADDENDUM 2

PROJECT # 12745
STORMWATER IMPROVEMENTS
RIVER OAKS PUMP STATIONS
EFFLUENT BOX AND WET WELL
UPPER PLAN

SHEET NO.
1M-01
TOTAL: 85
CAD FILE: 12745-1M01
DRAWING FILE NO. 4-142-97

Hazen

HAZEN AND SAWYER
4000 HOLLYWOOD BLVD, SUITE 750N
HOLLYWOOD, FLORIDA 33021

ENGINEER: JENNIFER N. MCMAHON
REG. No: 56800
DATE: 05/12/22
TEL: 954-987-0066
FAX: 954-987-2949

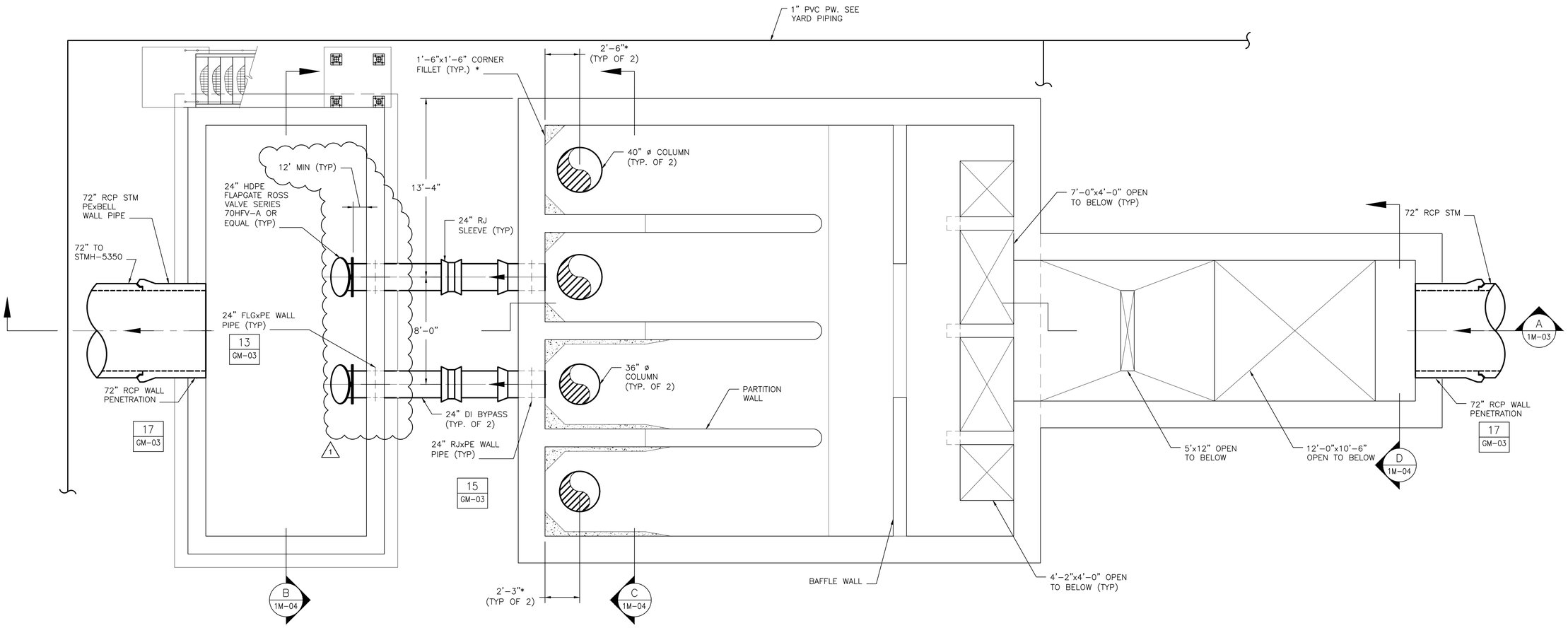

NOTES:

1. BASIS OF DESIGN SHOWN IS FLYGT SUBMERSIBLE COLUMN PUMPS. CONTRACTOR SHALL COORDINATE PUMPS, PIPING LAYOUT, AND WET WELL DIMENSIONS WITH ACTUAL EQUIPMENT SUPPLIED. ANY REQUIRED MODIFICATIONS SHALL BE INCLUDED IN CONTRACTOR'S BID PRICE.
2. MODIFICATIONS TO LAYOUT SHALL BE APPROVED BY ENGINEER.
3. DIMENSIONS MARKED WITH A * MAY VARY BASED ON EQUIPMENT FURNISHED

BOTTOM PLAN

1/4" = 1'-0"

1/4"=1'-0"

1 0 1 2 3 7'

BID DOCUMENTS

DRAWN BY:	DATE:
RVB	05/12/22
DESIGNED BY:	SCALE:
JNM	1/4"=1'-0"
CHECKED BY:	
JJF	
FIELD BOOK:	
XXXX	

CITY OF FORT LAUDERDALE
PUBLIC WORKS DEPARTMENT
ENGINEERING & ARCHITECTURE
100 North Andrews Avenue, Fort Lauderdale, Florida 33301

REVISIONS

NO.	DATE	BY	CHK'D	DESCRIPTION
1	8/11/22	JMB	JNM	ADDENDUM 2

PROJECT # 12745
STORMWATER IMPROVEMENTS
RIVER OAKS PUMP STATIONS
EFFLUENT BOX AND WET WELL
LOWER PLAN

SHEET NO.
1M-02

TOTAL: 85

CAD FILE: 12745-1M02

DRAWING FILE NO. 4-142-97

PUMP INFORMATION CHART				
PUMP NO.	1001	1002	1003	1004
PRIMARY DESIGN POINT	6400 GPM@ 15 FT	6400 GPM@ 15 FT	22,000 GPM@ 15 FT	22,000 GPM@ 15 FT
SECONDARY DESIGN POINT	8000 GPM@ 8 FT	8000 GPM@ 8 FT	25,000@ 9 FT	25,000@ 9 FT
MOTOR SIZE (HP)	45	45	135	135
SPEED (RPM)	590	590	705	705
IMPELLER DIAMETER (MM)	400	400	570	570
COLUMN DIAMETER (INCHES)	35 7/16	35 7/16	39 3/8	39 3/8
PUMP MANUFACTURER (OR EQUAL)	FLYGT	FLYGT	FLYGT	FLYGT
PUMP MODEL	LL 3400	LL 3400	PL 7081	PL 7081

LEVEL CONTROL INFORMATION ELEVATIONS	
HIGH LEVEL ALARM	2.5
PUMP 1001 (1002) ON	0.5
PUMP 1002 (1001) ON	1
PUMP 1003 (1004) ON	1.5
PUMP 1004 (1003) ON	2
ALL PUMPS OFF	(-) 4.0
LOW LEVEL ALARM	(-) 5.0

Hazen

HAZEN AND SAWYER
4000 HOLLYWOOD BLVD, SUITE 750N
HOLLYWOOD, FLORIDA 33021

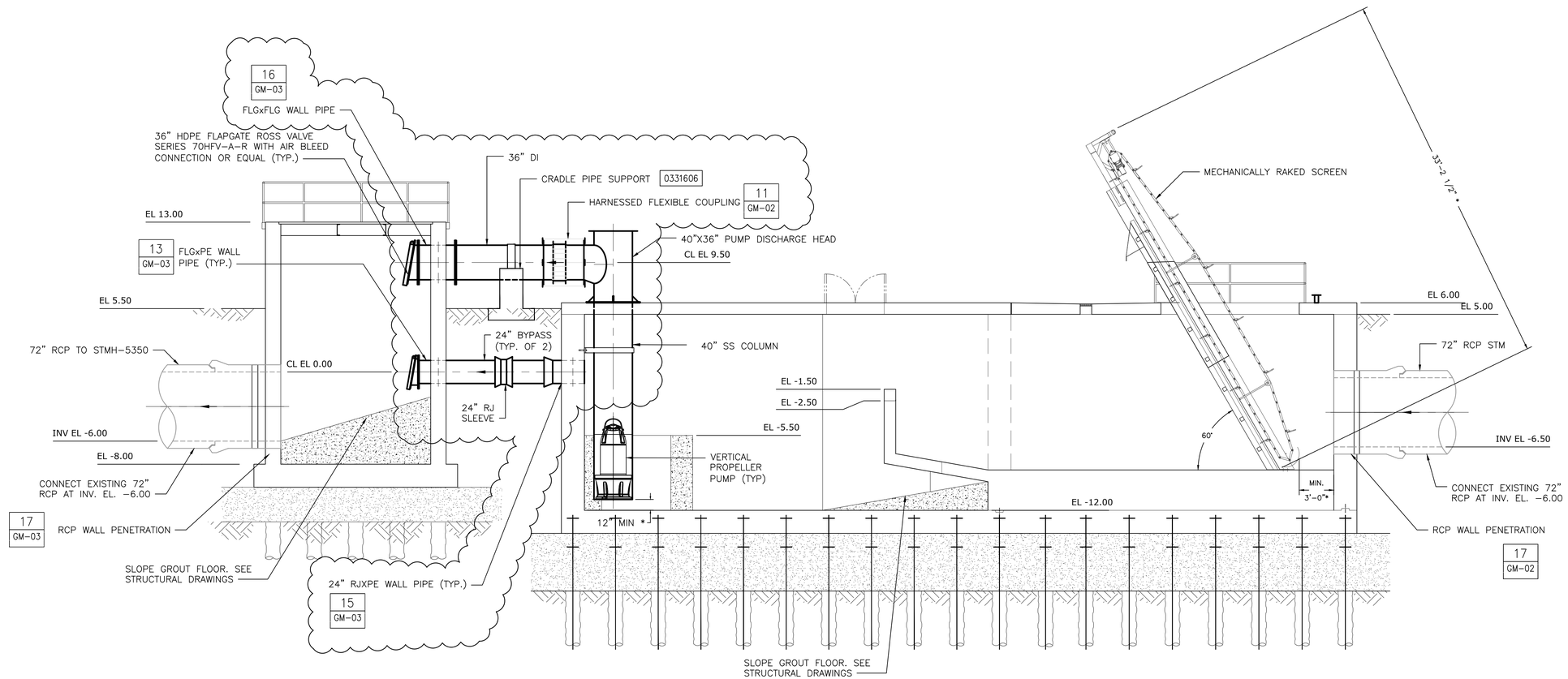

SECTION A 1M-01
3/16" = 1'-0"

NOTES:

1. BASIS OF DESIGN SHOWN IS FLYGT SUBMERSIBLE COLUMN PUMPS. CONTRACTOR SHALL COORDINATE PUMPS, PIPING LAYOUT, AND WET WELL DIMENSIONS WITH ACTUAL EQUIPMENT SUPPLIED. ANY REQUIRED MODIFICATIONS SHALL BE INCLUDED IN CONTRACTOR'S BID PRICE.
2. MODIFICATIONS TO LAYOUT SHALL BE APPROVED BY ENGINEER.
3. DIMENSIONS MARKED WITH A * MAY VARY BASED ON EQUIPMENT FURNISHED
4. CONTRACTOR TO PROVIDE MANUFACTURER'S RECOMMENDED ANCHORS TO CONCRETE FOR SCREEN AT INVERT, TOP OF WET WELL, AND DISCHARGE CHUTE.

3/16"=1'-0" 6 4 2 0 5'

BID DOCUMENTS

ENGINEER: JENNIFER N. MCMAHON
REG. No: 54680
DATE: 05/12/22
TEL: 954-987-0066
FAX: 954-987-2949

DRAWN BY: RVB
DATE: 05/12/22
DESIGNED BY: JNM
SCALE: 3/16"=1'-0"
CHECKED BY: JJF
FIELD BOOK: XXXX

CITY OF FORT LAUDERDALE
PUBLIC WORKS DEPARTMENT
ENGINEERING & ARCHITECTURE
100 North Andrews Avenue, Fort Lauderdale, Florida 33301

REVISIONS

NO.	DATE	BY	CHK'D	DESCRIPTION
1	8/11/22	JMB	JNM	ADDENDUM 2

PROJECT # 12745
STORMWATER IMPROVEMENTS
RIVER OAKS PUMP STATIONS
EFFLUENT BOX AND WET WELL
SECTION - SHEET 1

SHEET NO. 1M-03
TOTAL: 85
CAD FILE: 12745-1M03
DRAWING FILE NO. 4-142-97

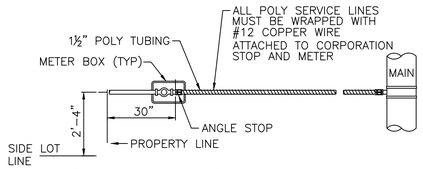

SINGLE NEW SERVICE PLAN

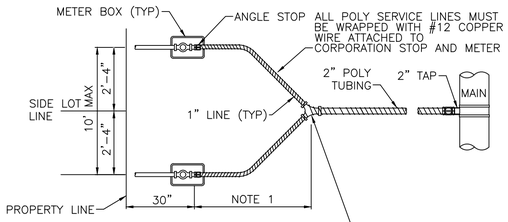

NOTE:

1. KEEP 1½" WYE AS CLOSE AS POSSIBLE TO METER BOX.

DOUBLE NEW SERVICE PLAN

TYPICAL WATER SERVICE

DETAIL 1

NTS –

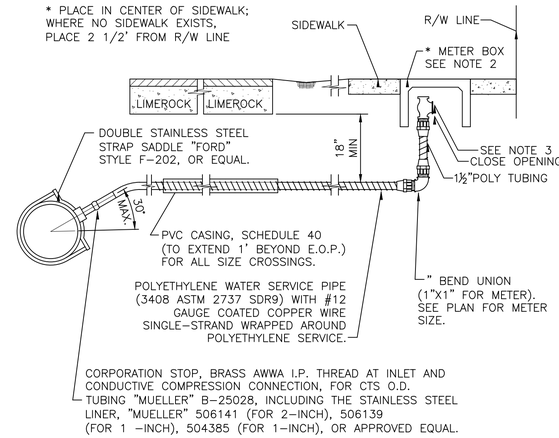

NOTE:

1. GROUND KEY ANGLE METER STOP,CONDUCTIVE COMPRESSION FOR CTS O.D. TUBING, X METER FLANGE 180° TURN CHECK-LOCK WING "MUELLER" H-14277, FOR 2-INCH INCLUDING THE STAINLESS STEEL LINER, "MUELLER" 506141 (FOR 2-INCH) OR APPROVED EQUAL, AND MUELLER 110 COMPRESSION CONNECTION.
2. METER BOXES FOR 5/8, 3/4, AND 1 INCH METERS SHALL BE THE OKIE DOKIE #890-40-260282 MEDIUM BOX AND 890-40-260257 MEDIUM LID OR EQUAL.
3. CONNECT ANGLE VALVE TO EXISTING METER WHERE APPLICABLE.

TYPICAL WATER SERVICE

DETAIL 2

NTS –

Hazen

HAZEN AND SAWYER
4000 HOLLYWOOD BLVD, SUITE 750N
HOLLYWOOD, FLORIDA 33021

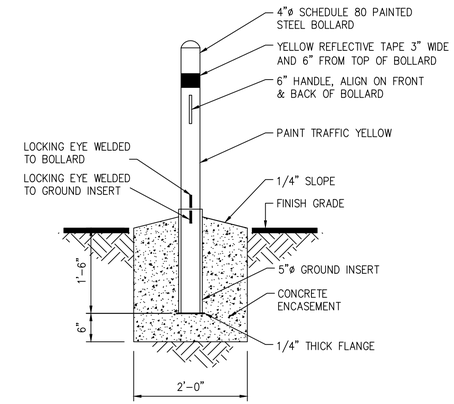

NOTE:

ALL BOLLARDS SHALL BE PERMANENT TYPE UNLESS INDICATED OTHERWISE ON THE PLANS.

REMOVABLE BOLLARD

DETAIL 3

NTS –

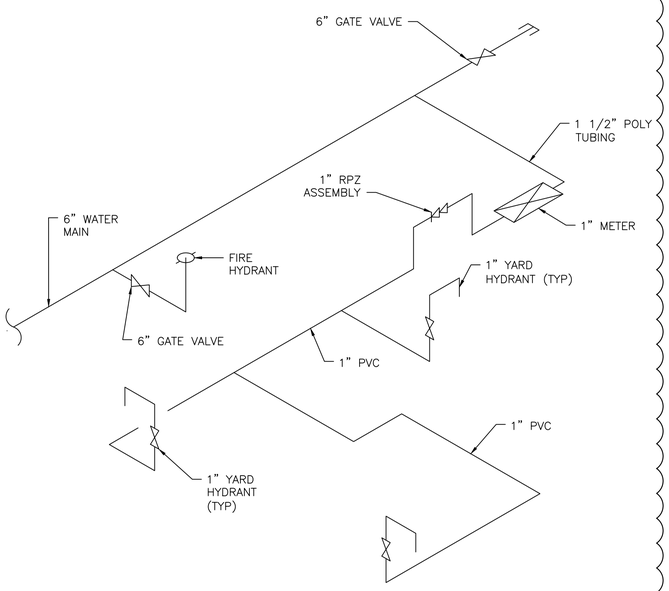

OUTFALL PUMP STATION
POTABLE WATER SCHEMATIC RISER 1

DETAIL 4

NTS –

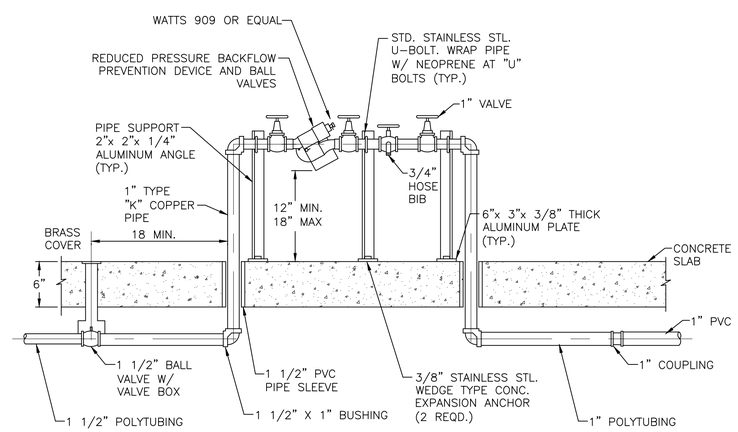

REDUCED PRESSURE BACKFLOW PREVENTER WITH HOSE CONNECTION FOR PUMP STATION

DETAIL 5

NTS –

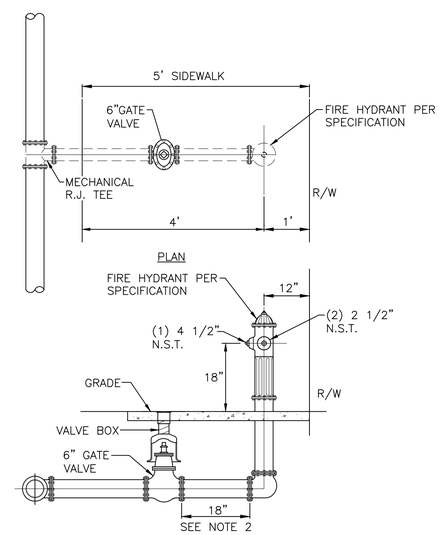

NOTES:

1. ACTUAL LOCATION OF FIRE HYDRANT TO BE DECIDED IN THE FIELD WITH ENGINEER'S APPROVAL.
2. KEEP VALVE AS CLOSE AS POSSIBLE TO THE HYDRANT.
3. FIRE HYDRANTS SHALL BE BREAKAWAY MUELLER CO. CENTURION MODEL #A-423, OR METROPOLITAN 250 EDDY COMPRESSION TYPE F.H. OR APPROVED EQUAL.
4. FIRE HYDRANTS SHALL BE INSTALLED WITH THE INSTALLED WITH THE CENTER OF THE NOZZLE 18" ABOVE FINISHED GRADE.
5. DEAD-END WATER MAINS 6" OR LARGER SHALL TERMINATE WITH A FIRE HYDRANT.

TYPICAL NEW FIRE HYDRANT ASSEMBLY INSTALLATION

DETAIL 6

NTS –

BID DOCUMENTS

ENGINEER: JENNIFER N. MCMAHON
REG. No: 56400
DATE: 05/12/22
TEL: 954-987-0066
FAX: 954-987-2949

DRAWN BY:	DATE:
RVB	05/12/22
DESIGNED BY:	SCALE:
JNM	AS NOTED
CHECKED BY:	
JFF	
FIELD BOOK:	XXXX

CITY OF FORT LAUDERDALE
PUBLIC WORKS DEPARTMENT
ENGINEERING & ARCHITECTURE
100 North Andrews Avenue, Fort Lauderdale, Florida 33301

REVISIONS

NO.	DATE	BY	CHK'D	DESCRIPTION
1	8/11/22	JMB	JNM	ADDENDUM 2

PROJECT # 12745
STORMWATER IMPROVEMENTS
RIVER OAKS PUMP STATIONS
STANDARD MECHANICAL DETAILS
- SHEET 1

SHEET NO.
GM-01

TOTAL: 85

CAD FILE: 12745-GM01

DRAWING FILE NO. 4-142-97

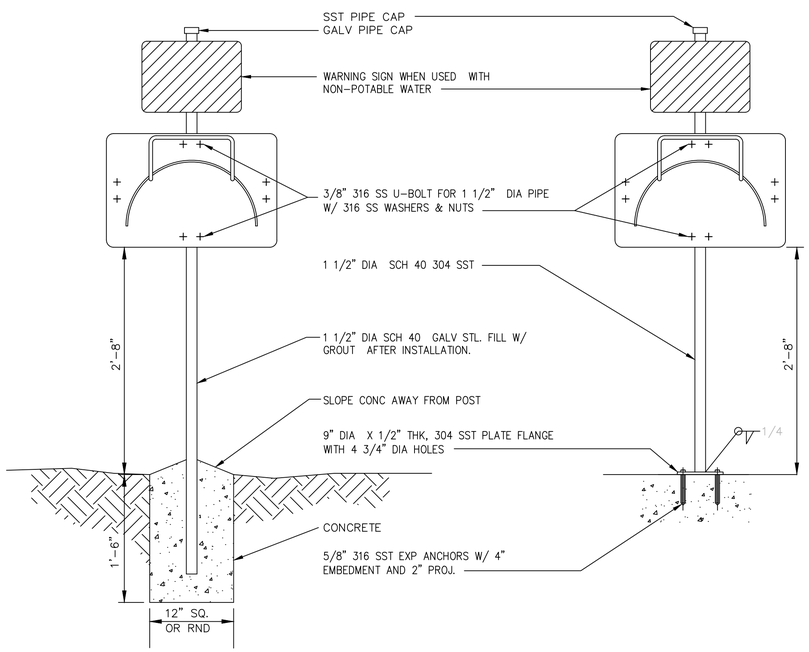

YARD MOUNT DETAIL

FREE STANDING MOUNT DETAIL

HOSE RACK MOUNTING DETAILS

DETAIL 7
NTS –

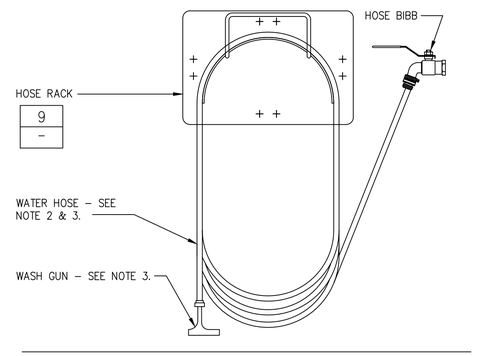

NOTES:

1. FURNISH 75' OF 3/4" ø HEAVY DUTY WATER HOSE WITH CORD BRAID REINFORCING AND FLEXIBLE NEOPRENE EXTERIOR.
2. HOSE TO BE FITTED WITH 3/4" FEMALE GN GNT FITTING ON ONE END AND 3/4" FEMALE GNT SWIVEL SPRAY NOZZLE ON FREE END. PROVIDE STAINLESS STEEL SPRING PROTECTOR ON BOTH ENDS.
3. PROVIDE LEVER ACTION WASH GUN, BRONZE BODY, SST INTERNALS, RUBBER COVERED, 150 PSI RATED. McMASTER CARR WASH GUN – #6451T57 OR EQUAL.

TYPICAL HOSE STATION

DETAIL 8
NTS –

Hazen

HAZEN AND SAWYER
4000 HOLLYWOOD BLVD, SUITE 750N
HOLLYWOOD, FLORIDA 33021

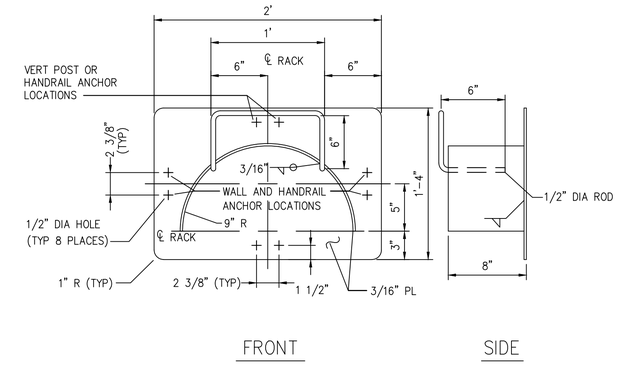

NOTES:

1. ALL MATERIAL TO BE 304 STAINLESS STEEL. ANNEAL ASSEMBLY AFTER FABRICATION.
2. CHAMFER, GRIND, DEBURR ALL METAL EDGES FOR SMOOTH CONTOUR.
3. ATTACH TO HANDRAIL WITH 316 STAINLESS STEEL U-BOLTS, NUTS AND WASHERS.

HOSE RACK

DETAIL 9
NTS –

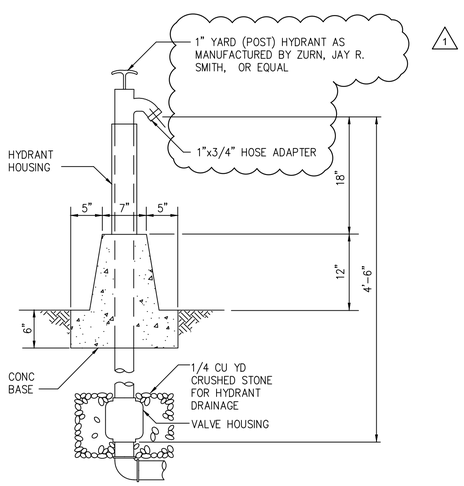

YARD HYDRANT

DETAIL 10
NTS –

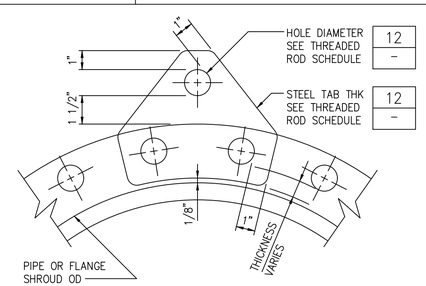

STEEL TABS

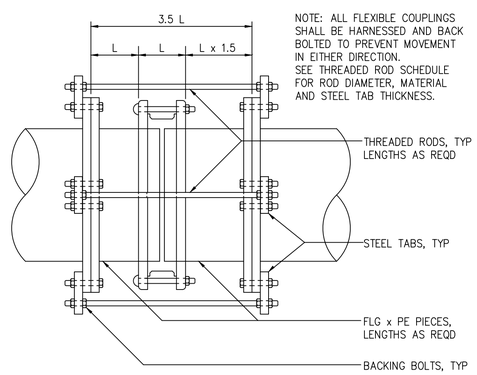

NOTE: ALL FLEXIBLE COUPLINGS SHALL BE HARNESSED AND BACK BOLTED TO PREVENT MOVEMENT IN EITHER DIRECTION. SEE THREADED ROD SCHEDULE FOR ROD DIAMETER, MATERIAL AND STEEL TAB THICKNESS.

HARNESSED FLEXIBLE COUPLING

DETAIL 11
NTS –

THREADED ROD SCHEDULE

PIPE SIZE	DESIGN PRESSURE (DIMENSIONS IN INCHES) 50 PSI BOLTS NO-DIA	50 PSI TAB THK	100 PSI BOLTS NO-DIA	100 PSI TAB THK	150 PSI BOLTS NO-DIA	150 PSI TAB THK	200 PSI BOLTS NO-DIA	200 PSI TAB THK	250 PSI BOLTS NO-DIA	250 PSI TAB THK	300 PSI BOLTS NO-DIA	300 PSI TAB THK	350 PSI BOLTS NO-DIA	350 PSI TAB THK
4,6	2–3/4	1	2–3/4	1	2–3/4	1	2–3/4	1	2–3/4	1	2–3/4	1	2–3/4	1
8	2–3/4	1 1/4	2–3/4	1 1/4	2–3/4	1 1/4	2–3/4	1 1/4	2–3/4	1 1/4	4–3/4	1 1/4	4–3/4	1 1/4
10	2–3/4	1 1/4	2–3/4	1 1/4	2–3/4	1 1/4	4–3/4	1 1/4	4–3/4	1 1/4	4–3/4	1 1/4	4–3/4	1 1/4
12	2–3/4	1 1/4	2–3/4	1 1/4	4–3/4	1 1/4	4–3/4	1 1/4	6–3/4	1 1/4	6–3/4	1 1/4	6–3/4	1 1/4
14	2–3/4	1 1/2	4–3/4	1 1/2	4–3/4	1 1/2	4–3/4	1 1/2	4–3/4	1 1/2	4–3/4	1 1/2	4–3/4	1 1/2
16	2–3/4	1 1/2	4–3/4	1 1/2	6–3/4	1 1/2	4–3/4	1 1/2	4–3/4	1 1/2	4–3/4	1 1/2	6–3/4	1 1/2
18	2–3/4	1 3/4	4–3/4	1 3/4	6–3/4	1 3/4	4–3/4	1 3/4	6–3/4	1 3/4	6–3/4	1 3/4	6–3/4	1 3/4
20	4–3/4	1 3/4	4–3/4	1 3/4	4–3/4	1 3/4	4–3/4	1 3/4	6–3/4	1 3/4	6–3/4	1 3/4	8–3/4	1 3/4
24	4–3/4	2	4–3/4	2	6–3/4	2	6–3/4	2	8–3/4	2	10–3/4	2	10–3/4	2
30	4–1	2 1/4	4–1	2 1/4	4–1	2 1/4	6–1	2 1/4	8–1	2 1/4	10–1	2 1/4	10–1	2 1/4
36	4–1	2 1/2	4–1	2 1/2	6–1	2 1/2	8–1	2 1/2	10–1	2 1/2	12–1	2 1/2	14–1	2 1/2
42	4–1 1/4	2 3/4	4–1 1/4	2 3/4	6–1 1/4	2 3/4	8–1 1/4	2 3/4	10–1 1/4	2 3/4	12–1 1/4	2 3/4	12–1 1/4	2 3/4
48	6–1 1/4	2 3/4	4–1 1/4	2 3/4	8–1 1/4	2 3/4	8–1 1/4	2 3/4	12–1 1/4	2 3/4	12–1 1/4	2 3/4	14–1 1/4	2 3/4
54	6–1 1/4	3	6–1 1/4	3	8–1 1/4	3	12–1 1/4	3	14–1 1/4	3	16–1 1/4	3	18–1 1/4	3

1. THREADED RODS FOR ALL PIPE DIAMETERS IN THE SHADED AREA SHALL BE ASTM A193 (GRADE B7) AND SHALL BE HOT DIP GALVANIZED.
2. ALL OTHER THREADED RODS SHALL BE ASTM A36 AND SHALL BE HOT DIP GALVANIZED. ALL TABS SHALL BE ASTM A572 GR50 AND SHALL BE HOT DIP GALVANIZED.
3. ASTM A193 (GRADE B7) RODS SHALL BE LABELED AND BUNDLED SEPARATELY.
4. THIS SCHEDULE SHALL APPLY FOR HARNESSED FLANGED ADAPTERS, HARNESSED FLEXIBLE COUPLINGS AND ALL MECHANICAL JOINT COUPLINGS, SLEEVES ETC. THAT ARE REQUIRED TO BE HARNESSED.
5. RODS THREADED AT ENDS (INCLUDING NUTS) SHALL BE EQUALLY SPACED AROUND PIPE BETWEEN ALL MECHANICAL JOINT FITTINGS (TEE, VALVES, BEND, PLUG, ETC.) OR AS OTHERWISE SHOWN ON THE CONTRACT DRAWINGS. THREADED RODS SHALL BE AS SHOWN IN THE THREADED ROD SCHEDULE. SEE NOTE 6.
6. ALL BOLTS AND NUTS SHALL BE HOT DIP GALVANIZED. IN ADDITION, RODS, NUTS, TABS, ETC., IN CONTACT WITH SOIL SHALL BE PAINTED WITH TWO COATS COAL TAR (MIN 26 DRY MIL THICKNESS) TNEMEC 46-465 HI-BUILD OR EQUAL.

THREADED ROD SCHEDULE

DETAIL 12
NTS –

BID DOCUMENTS

ENGINEER:
JENNIFER N. MCMAHON
REG. No: 56400
DATE: 05/12/22
TEL: 954-987-0066
FAX: 954-987-2949

DRAWN BY: RVB	DATE: 05/12/22
DESIGNED BY: JNM	SCALE: AS NOTED
CHECKED BY: JFF	
FIELD BOOK: XXXX	

CITY OF FORT LAUDERDALE
PUBLIC WORKS DEPARTMENT
ENGINEERING & ARCHITECTURE
100 North Andrews Avenue, Fort Lauderdale, Florida 33301

REVISIONS

NO.	DATE	BY	CHK'D	DESCRIPTION
1	8/11/22	JMB	JNM	ADDENDUM 2

PROJECT # 12745
STORMWATER IMPROVEMENTS
RIVER OAKS PUMP STATIONS
STANDARD MECHANICAL DETAILS
- SHEET 2

SHEET NO.
GM-02

TOTAL: 85

CAD FILE: 12745-GM02

DRAWING FILE NO. 4-142-97

GENERAL STRUCTURAL NOTES

G–1 THESE NOTES ARE GENERAL AND SUPPLEMENT THE SPECIFICATIONS. THESE NOTES APPLY TO THE ENTIRE PROJECT UNLESS MODIFIED OR NOTED OTHERWISE IN THE CONTRACT DOCUMENTS.

G–2 STANDARD DETAILS SHALL BE USED WHEN REFERRED TO OR WHEN NO MORE RESTRICTIVE OR DIFFERENT DETAILS ARE SHOWN ON THE DRAWINGS.

G–3 DESIGN IS IN ACCORDANCE WITH AND CONSTRUCTION SHALL COMPLY WITH THE PROVISIONS OF THE 2020 FLORIDA BUILDING CODE. THE DESIGN LOADS AND OTHER DESIGN VALUES GIVEN IN NOTES G–4 THROUGH G–7 WERE USED FOR DESIGN OF STRUCTURES UNLESS NOTED OTHERWISE ON THE DRAWINGS.

G–4 LIVE LOADS:

STRUCTURE \ LEVEL	ROOF	TOP/FIRST FLOOR	BOTTOM/GROUND FLOOR
OUTFALL PS	–	300 PSF	–
EFFLUENT DISCHARGE BOX	–	100 PSF	–
ELECTRICAL BUILDING	30	–	100 PSF
INFLUENT PS	–	300 PSF	–

–ALL STAIRWAYS, LANDINGS AND PLATFORMS ARE DESIGNED FOR A LIVE LOAD = 100 PSF UNLESS NOTED OTHERWISE.

G–5 WIND DESIGN CRITERIA: (1)

RISK CATEGORY = III
WIND SPEED = 180 MPH (ASCE 7–16)
WIND IMPORTANCE FACTOR (Iw) = 1.0
WIND EXPOSURE = C

STRUCTURE \ PARAMETER	PRESSURE COEFFICIENT GCpi	LATERAL LOAD RESISTING SYSTEM
OUTFALL PS	–	CONCRETE WALLS
EFFLUENT DISCHARGE BOX	–	CONCRETE WALLS
ELECTRICAL BUILDING	0.55	CONCRETE MOMENT FRAME
INFLUENT PS	–	CONCRETE WALLS

G–6 ALL DIMENSIONS INDICATED (*) SHALL BE VERIFIED EITHER BY FIELD MEASUREMENTS FOR EXISTING STRUCTURES OR BY SHOP DRAWINGS FOR EQUIPMENT FURNISHED. STRUCTURAL DIMENSIONS NOT SHOWN BUT CONTROLLED BY OR RELATED TO EQUIPMENT SHALL BE VERIFIED BY THE CONTRACTOR WITH THE MANUFACTURER PRIOR TO CONSTRUCTION.

G–7 THE CONTRACTOR IS RESPONSIBLE FOR VERIFYING ALL EXISTING INFORMATION IN THE FIELD AS REQUIRED FOR NEW WORK.

G–8 IF A CONFLICT IS FOUND BETWEEN DIFFERENT PORTIONS OF THE CONTRACT DOCUMENTS, THE CONTRACTOR SHALL NOTIFY THE ENGINEER IMMEDIATELY. CONTINUED CONSTRUCTION OF THE AREA IN CONFLICT SHALL BE AT THE CONTRACTOR'S OWN RISK UNTIL THE CONFLICT IS RESOLVED.

G–9 EQUIPMENT ANCHOR BOLT SIZES, TYPES, EMBEDMENT AND PATTERNS SHALL BE VERIFIED WITH THE MANUFACTURER. ALL BOLT PATTERNS SHALL BE TEMPLATED TO INSURE ACCURACY OF PLACEMENT.

G–10 STRUCTURAL DRAWINGS SHALL BE USED IN COORDINATION WITH THE DRAWINGS OF ALL OTHER DISCIPLINES AND MANUFACTURER'S SHOP DRAWINGS.

G–11 STRUCTURES HAVE BEEN DESIGNED FOR OPERATIONAL LOADS ON THE COMPLETED STRUCTURE. DURING CONSTRUCTION, THE STRUCTURES SHALL BE PROTECTED BY BRACING AND TEMPORARY SUPPORTS WHEREVER EXCESSIVE CONSTRUCTION LOADS MAY OCCUR. OVERSTRESSING OF ANY STRUCTURAL ELEMENT IS PROHIBITED.

G–12 NO BACKFILL SHALL BE PLACED AGAINST ANY SUBSTRUCTURE WALLS UNLESS ALL ADJACENT SUPPORTING ELEMENTS HAVE ACHIEVED DESIGN STRENGTH, OR WALLS HAVE BEEN PROPERLY BRACED, AND IN ANY CASE NOT SOONER THAN 28 DAYS AFTER THE PLACING OF CONCRETE UNLESS APPROVED BY THE ENGINEER. SUPPORTING ELEMENTS SHALL INCLUDE ADJACENT WALLS, SLABS, BEAMS AND COLUMNS.

G–13 LEAKAGE TESTING OF HYDRAULIC STRUCTURES SHALL NOT BEGIN UNTIL ALL STRUCTURAL ELEMENTS HAVE REACHED THE SPECIFIED MINIMUM CONCRETE STRENGTH. BACKFILL SHALL NOT BE PLACED AROUND ANY HYDRAULIC STRUCTURE UNTIL THE LEAKAGE TEST HAS BEEN COMPLETED UNLESS APPROVED BY THE ENGINEER.

STRUCTURAL METALS

M–1 DETAIL, FABRICATE, AND ERECT STRUCTURAL STEEL IN ACCORDANCE WITH AISC SPECIFICATION FOR STRUCTURAL STEEL BUILDINGS, ALLOWABLE STRESS DESIGN AND PLASTIC DESIGN, LATEST EDITION.

M–2 STEEL MATERIAL:
- A) STRUCTURAL TUBING: ASTM A500, GRADE B OR A501 (42 KSI)
- B) STRUCTURAL PIPE: ASTM A53, TYPE E OR S, GRADE B (35 KSI)
- C) PLATES AND ANGLES: ASTM A36 UNO (36 KSI)
- D) STRUCTURAL W SHAPES: ASTM A992 (50 KSI)
- E) STRUCTURAL S, M, C & H SHAPES: ASTM A572 GRADE 50 (50 KSI)

M–3 PROVIDE MINIMUM 3/4" DIAMETER ASTM A325 HIGH STRENGTH BOLTS WITH SNUG TIGHTENED TYPE N CONNECTIONS FOR STRUCTURAL STEEL UNLESS NOTED OTHERWISE. HOLES FOR BOLTS SHALL BE STANDARD SIZE UNLESS NOTED OTHERWISE.

M–4 PROVIDE TYPICAL STEEL BEAM CONNECTIONS FOR A CAPACITY OF NOT LESS THAN THE TOTAL UNIFORM LOAD CAPACITY TABULATED IN THE AISC TABLES FOR ALLOWABLE LOADS OF BEAMS UNLESS NOTED OTHERWISE.

M–5 DO NOT PAINT STEEL SURFACES WHICH ARE TO BE WELDED OR ARE TO BE ENCASED IN CONCRETE.

M–6 ALL STAINLESS STEEL FABRICATIONS EXPOSED TO UNDERWATER SERVICE SHALL BE TYPE 316. ALL OTHER STAINLESS STEEL FABRICATIONS SHALL BE TYPE 304 UNLESS NOTED OTHERWISE.

M–7 ALUMINUM SHALL BE ALLOY 6061–T6 UNLESS NOTED OTHERWISE.

M–8 ALL BOLTS, ANCHOR BOLTS, AND CONCRETE ANCHORS CONNECTING ALUMINUM SHALL BE STAINLESS STEEL TYPE 316 FOR UNDERWATER APPLICATIONS AND TYPE 304 FOR ALL OTHER APPLICATIONS.

M–9 DETAIL, FABRICATE, AND ERECT ALUMINUM IN ACCORDANCE WITH THE LATEST EDITION OF THE ALUMINUM ASSOCIATION ALUMINUM DESIGN MANUAL.

M–10 ALUMINUM SHALL BE ISOLATED FROM CONTACT WITH CONCRETE AND DISSIMILAR METALS.

M–11 ALL GROOVE AND BUTT WELDS SHALL BE FULL PENETRATION.

M–12 FILLET WELD SIZES SHALL NOT BE LESS THAN THE MINIMUM SIZE REQUIRED BY AISC CODE FOR PLATE SIZES TO BE CONNECTED AND SHALL BE APPLIED TO THE ENTIRE JOINT CONTACT LENGTH, AND NOT LESS THAN 3/16".

M–13 BOTTOM SURFACES OF BASE PLATES SHALL BE GROUTED TO ENSURE FULL BEARING CONTACT WITH CONCRETE SLAB.

M–14 WHENEVER ONE MEMBER IS FASTENED TO ANOTHER WITH FASTENINGS (BOLTS, WELDS, ETC.) SET AT A UNIFORM SPACING, THERE SHALL BE A MINIMUM OF TWO FASTENINGS PER PIECE CONNECTED AND THE FIRST AND LAST FASTENINGS SHALL BE LOCATED NOT TO EXCEED 0.25 OF FASTENER SPACING FROM EACH END.

M–15 BOLTED CONNECTIONS FOR STRUCTURAL STEEL SHALL BE ASSEMBLED AND INSPECTED IN ACCORDANCE WITH RCSC (SPECIFICATIONS FOR STRUCTURAL JOINTS USING ASTM A325 OR ASTM A490 BOLTS).

M–16 STRUCTURAL WELDED JOINTS SHALL CONFORM TO THE PROVISIONS OF AWS D1.1, STRUCTURAL WELDING CODE BY AMERICAN WELDING SOCIETY. PROOF OF WELDER CERTIFICATION SHALL BE AVAILABLE AT THE JOB SITE DURING TIMES OF INSPECTION.

FOUNDATIONS

F–1 CONCRETE (CAST–IN–PLACE) NOTES APPLY TO FOUNDATIONS.

F–2 ALLOWABLE SOIL BEARING PRESSURE

STRUCTURE \ PARAMETER	ALLOWABLE SOIL BEARING PRESSURE
OUTFALL PS	1500 PSF
EFFLUENT DISCHARGE BOX	1500 PSF
ELECTRICAL BUILDING	1500 PSF
INFLUENT PS	1500 PSF

F–3 MINIMUM DEPTH FROM ADJACENT FINISHED GRADE TO BOTTOM OF FOUNDATION = 12 INCHES.

F–4 SOFT OR LOOSE SOILS MAY BE ENCOUNTERED DURING EARTHWORK OPERATIONS, REQUIRING ADDITIONAL UNDERCUTTING AND FILL. REFER TO GEOTECHNICAL REPORT FOR DETAILED SOIL STRATIFICATION.

F–5 STRUCTURES ARE DESIGNED FOR THE 100–YEAR FLOOD ELEVATION OF XXX.XX.

F–6 GROUNDWATER CONTROL MAY BE REQUIRED DURING CONSTRUCTION. REFER TO GEOTECHNICAL REPORT FOR BORINGS.

PRECAST CONCRETE

PC–1 PRECAST PLANKS SHALL BE DESIGNED BY A PROFESSIONAL ENGINEER REGISTERED IN THE STATE OF FLORIDA. PLANKS SHALL PROVIDE OPENINGS TO ALLOW VENT PIPES, STRUCTURAL STEEL BRACING AND COLUMNS TO PASS THROUGH. PLANK INTERIOR ENDS SHALL BE GROUT FILLED TO PROVIDE A SMOOTH FINISH.

PC–2 PRECAST VAULTS AND MANHOLES SHALL BE DESIGNED BY A PROFESSIONAL ENGINEER REGISTERED IN THE STATE OF FLORIDA. STRUCTURAL DRAWINGS SHALL INDICATE DESIGN IS IN COMPLIANCE WITH THE FLORIDA BUILDING CODE.

CONCRETE (CAST–IN–PLACE)

C–1 DESIGN OF CONCRETE ELEMENTS INCLUDING WALLS, FORMED SLABS, BEAMS, AND COLUMNS IS IN ACCORDANCE WITH ACI 318 (CODE REQUIREMENTS FOR STRUCTURAL CONCRETE) AND 350 (CODE REQUIREMENTS FOR ENVIRONMENTAL ENGINEERING CONCRETE STRUCTURES).

C–2 FOR CONCRETE MIX DESIGN SEE SPECIFICATION SECTION 03300.

C–3 CONCRETE STRENGTH CLASSES (28–DAY COMPRESSIVE STRENGTH):

A) CLASS A1 CONCRETE (4,500 PSI): NORMAL WEIGHT CONCRETE SHALL BE USED IN ALL NON WATER–BEARING STRUCTURES, EXCEPT WHERE NOTED OTHERWISE IN CONTRACT DOCUMENTS. ALL CONCRETE SHALL BE CLASS A1 CONCRETE UNLESS ANOTHER CLASS IS SPECIFICALLY CALLED FOR ON CONTRACT DOCUMENTS OR SPECIFIED HEREIN.

B) CLASS A2 CONCRETE (4,500 PSI): NORMAL WEIGHT CONCRETE SHALL BE USED AT ALL WATER–BEARING AND CONTAINMENT STRUCTURES, EXCEPT WHERE NOTED OTHERWISE IN CONTRACT DOCUMENTS.

C) CLASS A3 CONCRETE (4,500 PSI): NORMAL WEIGHT CONCRETE SHALL BE USED AT ALL WALLS OF WATER–BEARING STRUCTURES. CLASS A3 CONCRETE IS SIMILAR TO CLASS A2 EXCEPT CLASS A3 SHALL CONTAIN A MANDATORY ADDITION OF HIGH RANGE WATER REDUCER.

D) CLASS B CONCRETE (4,000 PSI): NORMAL WEIGHT CONCRETE WITH PEA–ROCK AGGREGATE SHALL BE USED WHERE INDICATED ON THE CONTRACT DOCUMENTS OR AS APPROVED BY THE ENGINEER.

C–4 ALL BAR REINFORCING SHALL CONFORM TO ASTM A615, GRADE 60. WHERE REINFORCEMENT IS TO BE WELDED IN ACCORDANCE WITH AWS D1.4, ASTM A706 GRADE 60 SHALL BE USED. WELDED WIRE FABRIC SHALL CONFORM TO ASTM A185.

C–5 CONCRETE COVER FOR REINFORCING (UNLESS NOTED OTHERWISE ON THE DRAWINGS):

A) CONCRETE DEPOSITED DIRECTLY AGAINST SOIL:	3"
B) CONCRETE EXPOSED TO WEATHER (#5 OR SMALLER):	1 1/2"
CONCRETE EXPOSED TO WEATHER (#6 OR LARGER):	2"
C) SLABS:	1 1/2"
AT SURFACES CONTACTING FLUID:	2"
D) BEAMS AND COLUMNS (TO MAIN REINFORCEMENT):	2"
BEAMS AND COLUMNS (TO COLUMN TIES OR STIRRUPS):	1 1/2"
E) WALLS 12" OR MORE:	2"
WALLS LESS THAN 12" (#5 OR SMALLER):	1 1/2"
WALLS LESS THAN 12" (#6 OR LARGER):	2"
F) FOR SURFACES EXPOSED TO FLUID IN BEAMS, COLUMNS AND WALLS:	ADD 1/2" TO ABOVE VALUES

C–6 SPLICES SHALL BE CLASS "B" CONFORMING TO THE PROVISIONS OF ACI 318 UNLESS NOTED OTHERWISE. SPLICE LENGTH FOR TWO DIFFERENT SIZED BARS TO BE LAP SPLICED TOGETHER SHALL BE THE LENGTH OF THE LARGER BAR UNLESS NOTED OTHERWISE.

C–7 CONSTRUCTION JOINTS SHALL BE LOCATED AS SHOWN ON THE DRAWINGS. CONSTRUCTION JOINTS NOT SHOWN SHALL BE SUBMITTED BY THE CONTRACTOR FOR THE APPROVAL OF THE ENGINEER PRIOR TO SUBMITTING REBAR SHOP DRAWINGS. VERTICAL CONSTRUCTION JOINTS IN WALLS AND HORIZONTAL JOINTS IN SLABS SHALL BE PROVIDED AT A SPACING NOT GREATER THAN 45 FEET ON CENTER. FOR EXPOSED WALLS WITH FLUID OR EARTH ON THE OPPOSITE SIDE, THE SPACING BETWEEN VERTICAL AND HORIZONTAL JOINTS SHALL BE A MAXIMUM OF 25 FEET.

C–8 WHERE HORIZONTAL CONSTRUCTION JOINTS, LOCATED ABOVE THE FOUNDATION SLAB, EXTEND BEYOND WHERE NEEDED, THEY SHALL BE TERMINATED AT A VERTICAL CONSTRUCTION JOINT APPROVED BY THE ENGINEER.

C–9 ALL JOINTS WHICH ARE IN MEMBERS IN CONTACT WITH LIQUID OR BELOW GRADE SHALL HAVE A WATERSTOP. CONSTRUCTION JOINTS SHALL HAVE A 6" PVC RIBBED WATERSTOP. EXPANSION JOINTS SHALL HAVE A 9" PVC CENTER BULB RIBBED WATERSTOP. IN VERTICAL JOINTS, WATERSTOPS SHALL TERMINATE NO LESS THAN 18" ABOVE THE MAXIMUM WATER SURFACE OR 18" ABOVE GRADE, WHICHEVER IS HIGHER.

C–10 SLABS WITH SLOPING SURFACES SHALL HAVE THE INDICATED SLAB THICKNESS MAINTAINED AS THE MINIMUM. SLAB BOTTOMS CAN EITHER SLOPE WITH THE TOP SURFACE OR BE LEVEL. REINFORCEMENT IN SLABS WITH SLOPING SURFACES SHALL BE PLACED AT THE REQUIRED CLEARANCE FROM THE SLAB SURFACE.

C–11 ALL EXPOSED CORNERS SHALL HAVE A 3/4" CHAMFER OR A 1/2" RADIUS TOOLED CORNER.

C–12 EQUIPMENT SUPPORTS, ANCHORAGES, OPENINGS, RECESSES AND REVEALS NOT SHOWN ON THE STRUCTURAL DRAWINGS BUT REQUIRED BY OTHER CONTRACT DOCUMENTS, SHALL BE PROVIDED FOR PRIOR TO PLACING CONCRETE.

C–13 REINFORCING BARS AND ACCESSORIES SHALL NOT BE IN CONTACT WITH ANY METAL PIPE, PIPE FLANGE, METAL CONDUIT, OR OTHER METAL PARTS EMBEDDED IN CONCRETE. A MINIMUM CLEARANCE OF 2" SHALL BE PROVIDED.

C–14 DOWELS, ANCHOR BOLTS, PIPES, WATERSTOPS AND OTHER EMBEDDED ITEMS SHALL BE HELD SECURELY IN POSITION WHILE CONCRETE IS BEING PLACED.

C–15 CONDUITS AND OTHER SIMILAR ITEMS EMBEDDED IN OR PENETRATING THROUGH CONCRETE SHALL BE SPACED ON CENTER NOT LESS THAN 3 TIMES THEIR OUTSIDE DIMENSION, BUT NOT LESS THAN 2 1/2" CLEAR. WHEN SUCH ITEMS ARE EMBEDDED IN WALLS OR SLABS, THEY SHALL NOT OCCUPY MORE THAN 1/3 OF THE MEMBER THICKNESS.

C–16 AT ALL TYPICAL CURBS, EQUIPMENT PADS, AND PIPE SUPPORT PIERS, REINFORCING DOWELS SHOWN MAY BE REPLACED WITH MATCHING DOWELS SET IN EPOXY IN DRILLED HOLES AS SPECIFIED. DOWELS LOCATED CLOSER THAN 3" FROM ANY EDGE OF CONCRETE SHALL NOT BE REPLACED WITH DRILLED DOWELS.

C–17 DRILLED ADHESIVE DOWELS (WHERE DOWELS ARE SHOWN TO BE PLACED INTO HARDENED CONCRETE):

A) THE HOLE DIAMETER SHALL BE NO LARGER THAN 1/8" GREATER THAN THE DIAMETER OF THE REINFORCING BAR AT THE DEFORMATIONS.
B) THE DEPTH OF EMBEDMENT SHALL BE 12 BAR DIAMETERS, UNLESS NOTED OTHERWISE.
C) ADJUST THE DOWEL LOCATIONS AS NEEDED TO AVOID DRILLING THROUGH ANY REINFORCING BARS. IF THE LOCATION NEEDS TO BE MODIFIED, CONTACT THE ENGINEER. CONTRACTOR SHALL USE NON–DESTRUCTIVE MEANS TO FIELD LOCATE REINFORCEMENT PRIOR TO DRILLING HOLES FOR DOWELS.

C–18 CLEAR DISTANCE FROM ANCHOR BOLTS TO ANY CONCRETE EDGE SHALL BE 4" MINIMUM UNLESS NOTED OTHERWISE.

C–19 CONCRETE COMPRESSIVE STRENGTH TESTS SHALL BE AVAILABLE ON THE JOB SITE FOR REVIEW BY THE ENGINEER.

MASONRY

M–1 MASONRY MORTAR SHALL BE ASTM C 270 TYPE "S" AND MASONRY GROUT SHALL CONFORM TO REQUIREMENTS OF ASTM C 476.

M–2 CONCRETE MASONRY UNIT NET AREA COMPRESSIVE STRENGTH SHALL BE 1900 PSI WHEN TESTED IN ACCORDANCE WITH ASTM C 140. COMPLETE TEST REPORTS SHALL BE SUBMITTED TO THE BUILDING INSPECTOR.

M–3 MASONRY TRUSS TYPE REINFORCEMENT SHALL CONFORM TO ASTM A 951 AND REINFORCEMENT STEEL SHALL CONFORM TO REQUIREMENTS OF ASTM A 615 FOR GRADE 60 BILLET STEEL.

M–4 MASONRY REINFORCEMENT BAR SPLICES SHALL BE CONTACT SPLICES. UNLESS NOTED OTHERWISE, LENGTH OF SPLICE FOR SINGLE BARS IN CENTER OF CELLS OF 8" OR LARGER CMU SHALL BE A MINIMUM OF 36 INCHES FOR #4 BARS AND 45 INCHES FOR #5 BARS. LENGTH OF SPLICE FOR OTHER CONDITIONS SHALL BE AS SHOWN ON THE DRAWINGS.

M–5 BOND BEAM REINFORCEMENT SHALL BE PROVIDED WITH STD 90° HOOKS AT ALL WALL INTERSECTIONS. WHERE BOND BEAM REINFORCEMENT IS INTERRUPTED BY OPENINGS REINFORCEMENT SHALL BE PROVIDED WITH STD 180° HOOKS AT ENDS. SEE ARCHITECTURAL DRAWINGS FOR DETAILS.

SPECIAL INSPECTIONS

SI–1 SPECIAL PERIODIC AND CONTINUOUS INSPECTIONS SHALL BE IN ACCORDANCE WITH SPECIFICATIONS AND THE FLORIDA BUILDING CODE.

Hazen
HAZEN AND SAWYER
4000 HOLLYWOOD BLVD, SUITE 750N
HOLLYWOOD, FLORIDA 33021

ENGINEER: JEAN PAUL SILVA
REG. No: 66525
DATE: 05/12/22
TEL: 954–987–0066
FAX: 954–987–2949

DRAWN BY: TB | DATE: 05/12/22 | DESIGNED BY: JPS | SCALE: NONE | CHECKED BY: SJS | FIELD BOOK: XXXX

CITY OF FORT LAUDERDALE
PUBLIC WORKS DEPARTMENT
ENGINEERING & ARCHITECTURE
100 North Andrews Avenue, Fort Lauderdale, Florida 33301

REVISIONS

NO.	DATE	BY	CHK'D	DESCRIPTION
1	8/11/22	JMB	JNM	ADDENDUM 2

BID DOCUMENTS

PROJECT # 12745
STORMWATER IMPROVEMENTS
RIVER OAKS PUMP STATIONS
STRUCTURAL NOTES - SHEET 1

SHEET NO. S-01
TOTAL: 85
CAD FILE: 12745–S01
DRAWING FILE NO. 4–142–97

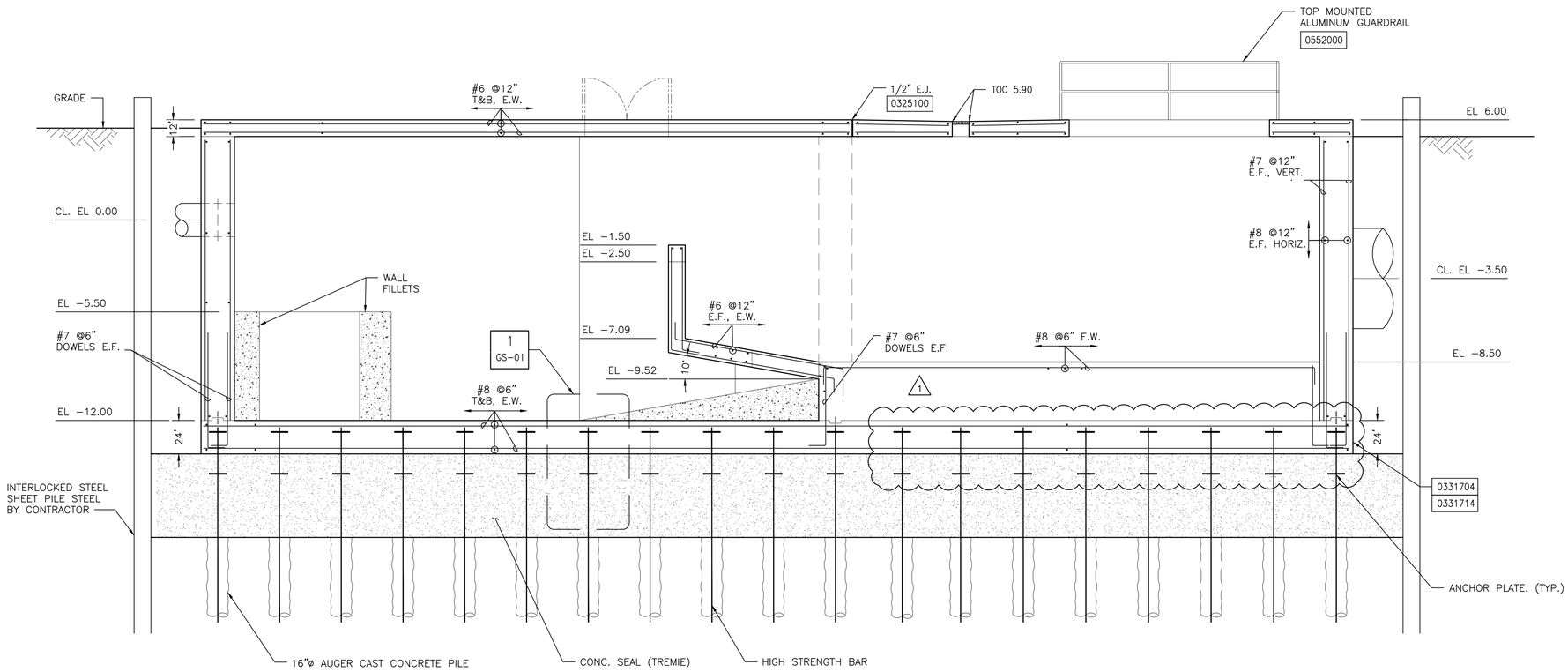

SECTION A
1/4" = 1'-0" 1S-02

1/4"=1'-0"

1 0 1 2 3 7'

Hazen

HAZEN AND SAWYER
4000 HOLLYWOOD BLVD, SUITE 750N
HOLLYWOOD, FLORIDA 33021

811 KNOW WHAT'S BELOW ALWAYS CALL 811 BEFORE YOU DIG
It's fast. It's free. It's the law.
www.callsunshine.com

ELEVATIONS SHOWN HEREON ARE BASED ON THE NORTH AMERICAN VERTICAL DATUM 1988 (NAVD 1988)

BID DOCUMENTS

ENGINEER:
JEAN PAUL SILVA
REG. No: 66525
DATE: 05/12/22
TEL: 954-987-0066
FAX: 954-987-2949

DRAWN BY: TB
DATE: 05/12/22
DESIGNED BY: JPS
SCALE: 1/4"=1'-0'
CHECKED BY: SJS
FIELD BOOK: XXXX

CITY OF FORT LAUDERDALE
PUBLIC WORKS DEPARTMENT
ENGINEERING & ARCHITECTURE
100 North Andrews Avenue, Fort Lauderdale, Florida 33301

REVISIONS

NO.	DATE	BY	CHK'D	DESCRIPTION
1	8/11/22	JMB	JNM	ADDENDUM 2

PROJECT # 12745
STORMWATER IMPROVEMENTS
RIVER OAKS PUMP STATIONS
WETWELL SECTIONS SHEET 1 -
OUTFALL STATION

SHEET NO.
1S-04
TOTAL: 85
CAD FILE: 12745-1S04
DRAWING FILE NO. 4-142-97

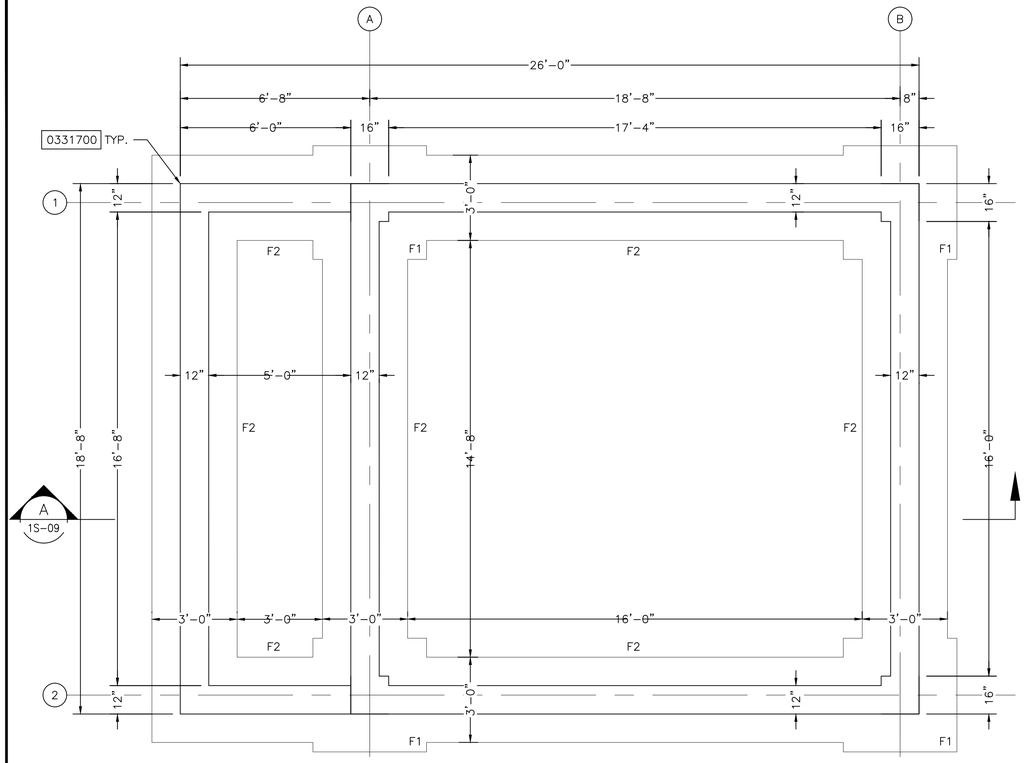

FOUNDATION PLAN

3/8" = 1'-0"

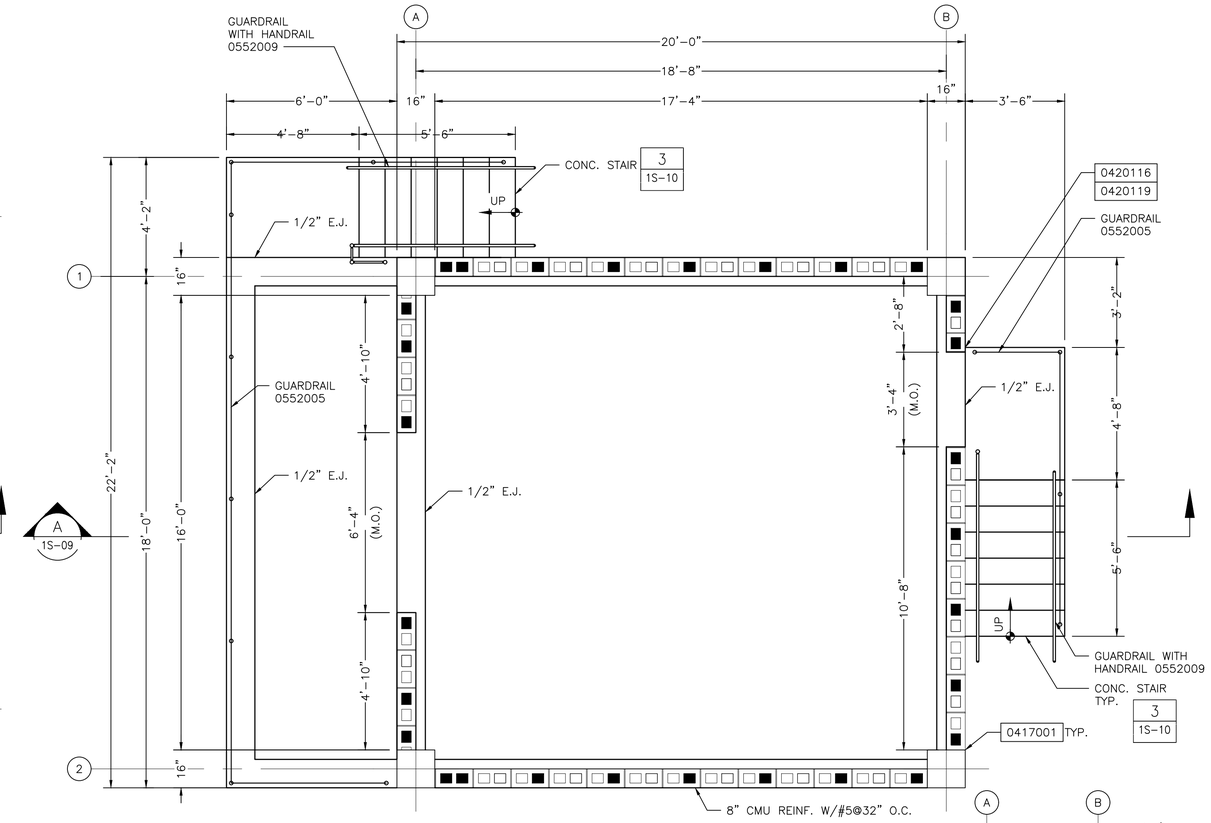

BOTTOM PLAN

3/8" = 1'-0"

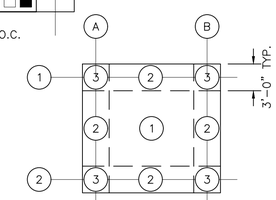

ROOF WIND LOAD KEY PLAN

NTS

NOMINAL ROOF WIND PRESSURES		
ZONE	WIND PRESSURE PSF	
	P (+)	P (−)
1	26	49
2	26	55
3	26	55

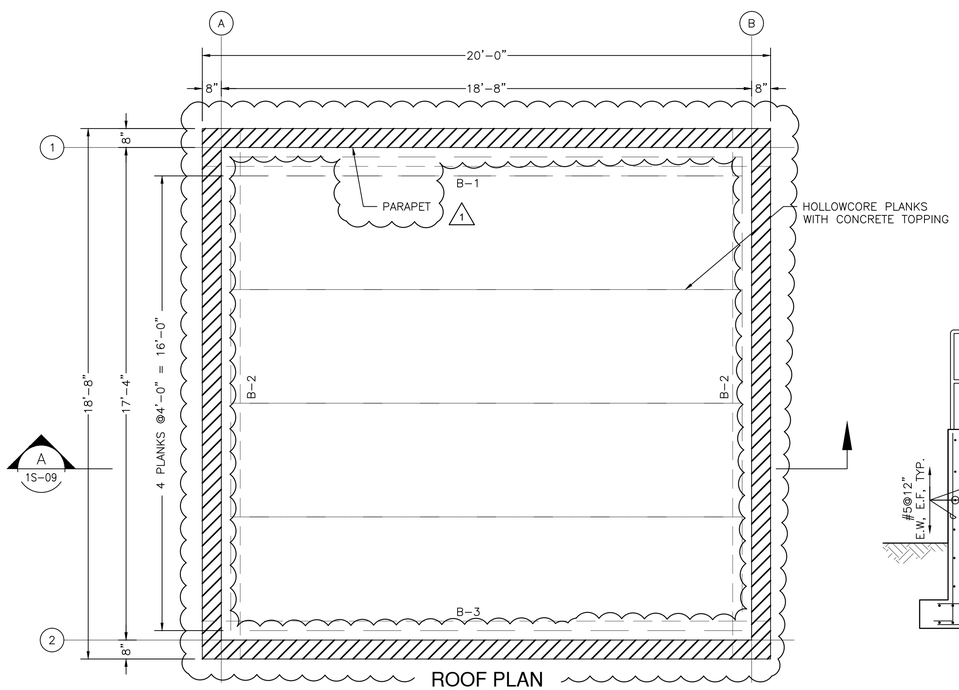

ROOF PLAN

3/8" = 1'-0"

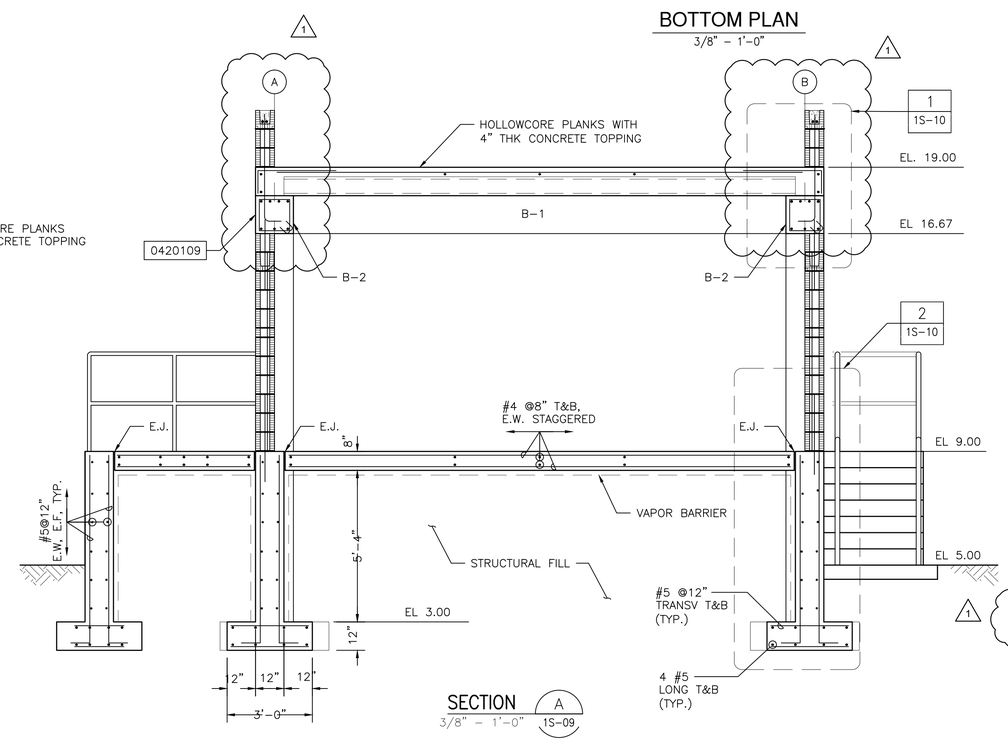

SECTION A

3/8" = 1'-0"

NOTE:

1. ROOF PRECAST PRESTRESSED ELEMENTS SHALL BE DESIGNED FOR THE FOLLOWING LOADS:
   A. SELF WEIGHT OF SYSTEM (PLANKS+TOPPING)
   B. ADDITIONAL SUPERIMPOSED DEAD LOAD: 15PSF
   C. LIVE LOAD 30PSF
   D. WIND LOAD: SEE TABLE ON THIS DRAWING
   E. EQUIPMENT LOADS
2. ALL PIPE SUPPORTS, EQUIPMENT PADS AND OTHER MISCELLANEOUS SUPPORTS ARE NOT SHOWN FOR CLARITY. REFER TO MECHANICAL, INSTRUMENTATION, HVAC, PLUMBING, AND ELECTRICAL DRAWINGS FOR MORE INFORMATION.
3. SEE ARCHITECTURAL DRAWING FOR ROOF DRAIN LOCATION, ROOFING, EIFS WALL SYSTEM AND OTHER DETAILS
4. SEE MECHANICAL, PLUMBING, ARCHITECTURAL AND HVAC DRAWINGS FOR ROOF PENETRATIONS AND ROOF MOUNTED EQUIPMENT.

3/8"=1'-0"

12" 0 1 2 4'

BID DOCUMENTS

ENGINEER:
JEAN PAUL SILVA
REG. No. 69625
DATE: 05/12/22

TEL: 954-987-0066
FAX: 954-987-2949

DRAWN BY: TB
DATE: 05/12/22
DESIGNED BY: JPS
SCALE: 3/8"=1'-0'
CHECKED BY: SJS
FIELD BOOK: XXXX

CITY OF FORT LAUDERDALE
PUBLIC WORKS DEPARTMENT
ENGINEERING & ARCHITECTURE
100 North Andrews Avenue, Fort Lauderdale, Florida 33301

REVISIONS

NO.	DATE	BY	CHK'D	DESCRIPTION
1	8/11/22	JMB	JNM	ADDENDUM 2

PROJECT # 12745
STORMWATER IMPROVEMENTS
RIVER OAKS PUMP STATIONS
ELECTRICAL BUILDING - PLANS
AND SECTION - OUTFALL STATION

SHEET NO.
1S-09

TOTAL: 85

CAD FILE: 12745-1S09

DRAWING FILE NO. 4-142-97

Hazen

HAZEN AND SAWYER
4000 HOLLYWOOD BLVD, SUITE 750N
HOLLYWOOD, FLORIDA 33021

FOOTING SCHEDULE								
MARK	BOTTOM ELEVATION	QUALITY	SIZE			REINFORCEMENT		REMARKS
			LENGTH	WIDTH	THICKNESS	TOP	BOTTOM	
F1	2.00	4	4'–0"	4'–0"	12"	#5 @12" E.W.	#5 @12" E.W.	
F2	2.00	7	—	3'–0"	12"	#5 @12" E.W.	#5 @12" E.W.	SEE SECTION A FOR REINFORCEMENT

BEAM SCHEDULE															
MARK	SPAN TYPE	SIZE		TOP ELEV	MAIN REINF		ADD REINF			S1 STIRRUPS		S2 STIRRUPS		REMARKS
		W"	D"		TOP	BOT	A	B	C	SIZE	SPACING	SIZE	SPACING	
B–1	SIMPLE	16	16	18.00	3–#5	3–#5	–	–	–	3	10	–	–	
B–2	SIMPLE	16	16	18.00	3–#5	3–#5	–	–	–	3	10	–	–	
B–3	SIMPLE	16	16	18.00	3–#5	3–#5	–	–	–	3	10	–	–	

NOTE:
SEE DETAIL 0331801 FOR TYPICAL BEAM TYPES AND ELEVATIONS.

NOMINAL WIND PRESSURES ON DOOR		
DOOR	PRESSURE PSF	
3'–0" x 7'–2"	+50	–61
6'–0" x 7'–2"	+49	–52

COLUMN SCHEDULE			
DESIGNATION / ELEVATION		A–1, A–2, B–1, B–2,	
EL 18.00			
EL 9.00	SIZE VERT BARS TIES TYPE	16"x16" 8–#8 #4@8" I	
DOWELS		8–#8	

NOTES:
1. SEE STANDARD DETAIL 0331800 FOR TYPICAL COLUMN ELEVATION.

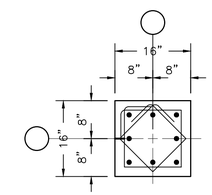

TYPE I

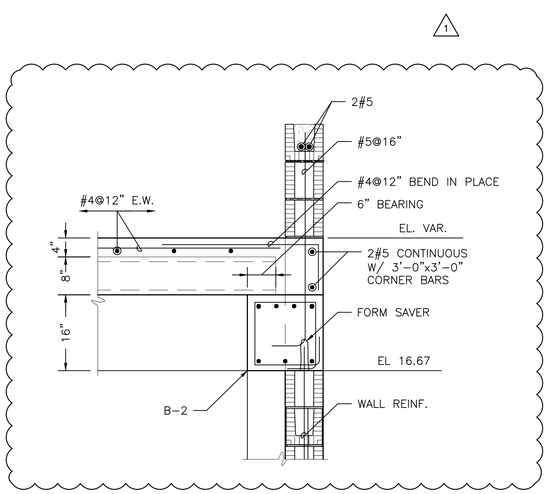

DETAIL 1 (1S–09)
3/4" = 1'–0"

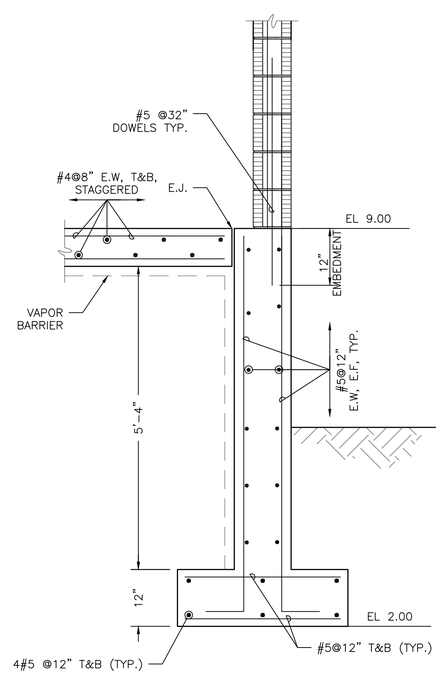

DETAIL 2 (1S–09)
3/4" = 1'–0"

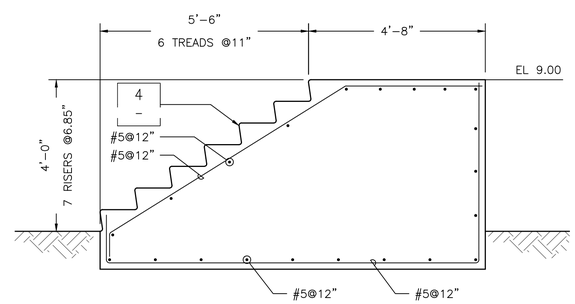

DETAIL 3 (1S–09)
1/2" = 1'–0"

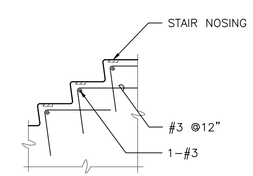

DETAIL 4 (–)
1/2" = 1'–0"

1/2"=1'-0" 12" 0 1 3'
3/4"=1'-0" 6" 0 1 2'

BID DOCUMENTS

ENGINEER:
JEAN PAUL SILVA
REG. No. 46625
DATE: 05/12/22
TEL: 954–987–0066
FAX: 954–987–2949

DRAWN BY: TB	DATE: 05/12/22
DESIGNED BY: JPS	SCALE: AS NOTED
CHECKED BY: SJS	
FIELD BOOK: XXXX	

CITY OF FORT LAUDERDALE
PUBLIC WORKS DEPARTMENT
ENGINEERING & ARCHITECTURE
100 North Andrews Avenue, Fort Lauderdale, Florida 33301

REVISIONS

NO.	DATE	BY	CHK'D	DESCRIPTION
1	8/11/22	JMB	JNM	ADDENDUM 2

PROJECT # 12745
STORMWATER IMPROVEMENTS
RIVER OAKS PUMP STATIONS
ELECTRICAL BUILDING
SCHEDULES - OUTFALL STATION

SHEET NO.
1S-10
TOTAL: 85
CAD FILE: 12745–1S10
DRAWING FILE NO. 4–142–97

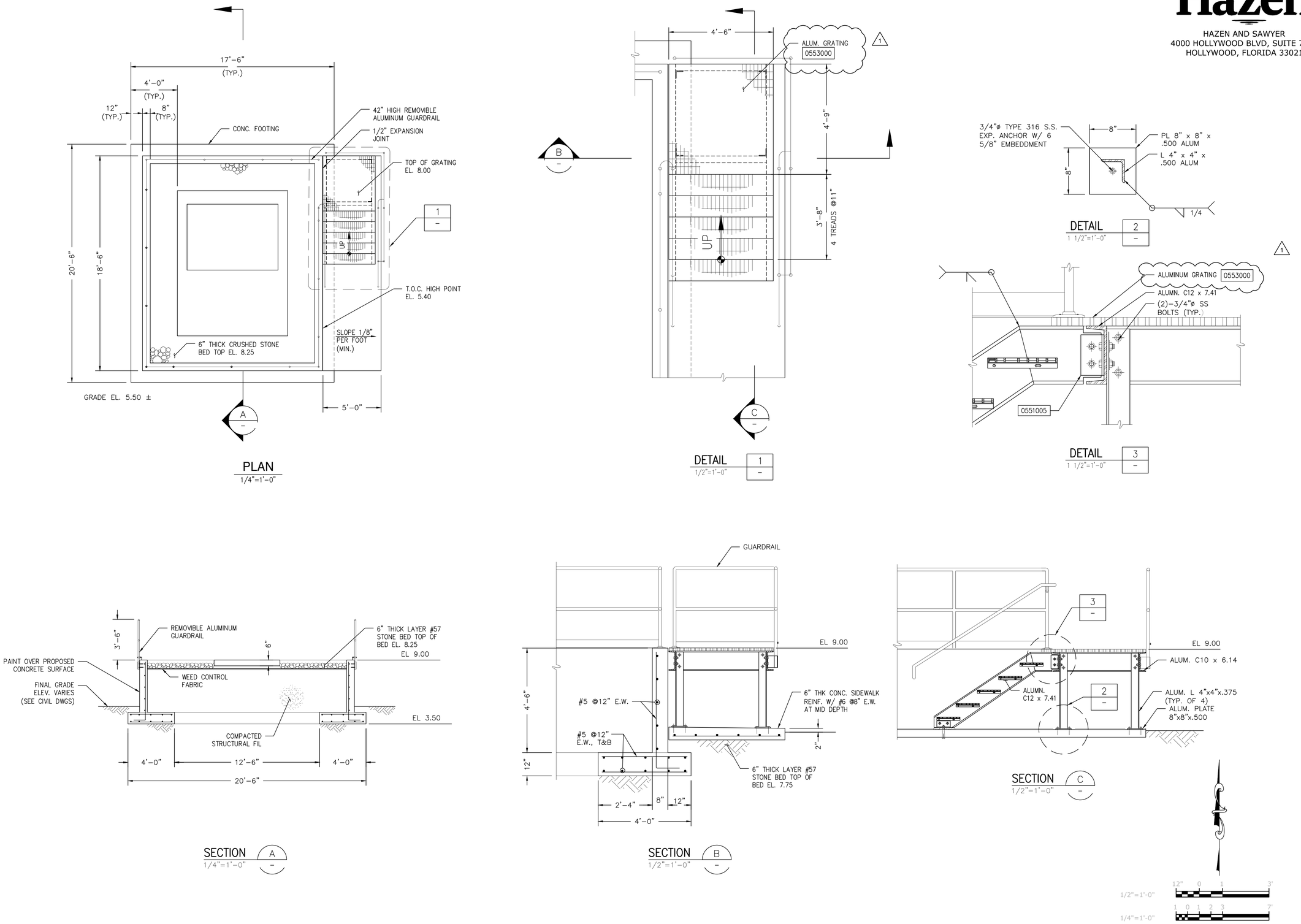

Hazen

HAZEN AND SAWYER
4000 HOLLYWOOD BLVD, SUITE 750N
HOLLYWOOD, FLORIDA 33021

ENGINEER: JEAN PAUL SILVA
REG. No: 66525
DATE: 05/12/22
TEL: 954-987-0066
FAX: 954-987-2949

DRAWN BY: TB
DATE: 05/12/22
DESIGNED BY: JPS
SCALE: AS NOTED
CHECKED BY: SJS
FIELD BOOK: XXXX

CITY OF FORT LAUDERDALE
PUBLIC WORKS DEPARTMENT
ENGINEERING & ARCHITECTURE
100 North Andrews Avenue, Fort Lauderdale, Florida 33301

REVISIONS

NO.	DATE	BY	CHK'D	DESCRIPTION
1	8/11/22	JMB	JNM	ADDENDUM 2

PROJECT # 12745
STORMWATER IMPROVEMENTS
RIVER OAKS PUMP STATIONS
TRANSFORMER PAD -
OUTFALL STATION

SHEET NO.
1S-11
TOTAL: 85
CAD FILE: 12745-1S11
DRAWING FILE NO. 4-142-97

BID DOCUMENTS

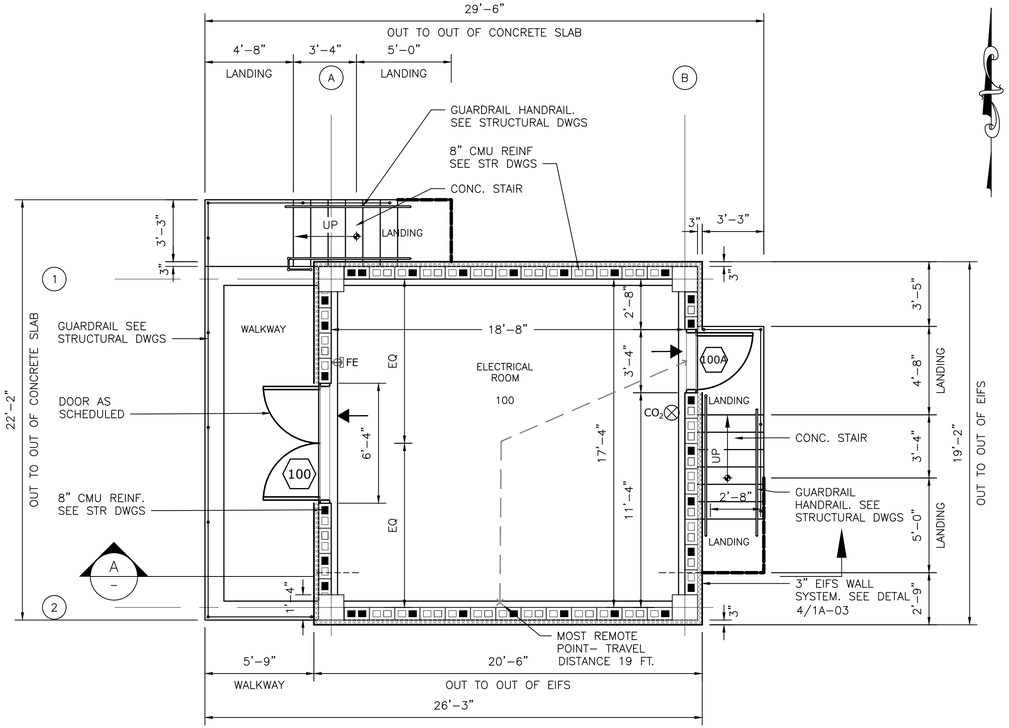

BOTTOM PLAN

1/4" = 1'-0"

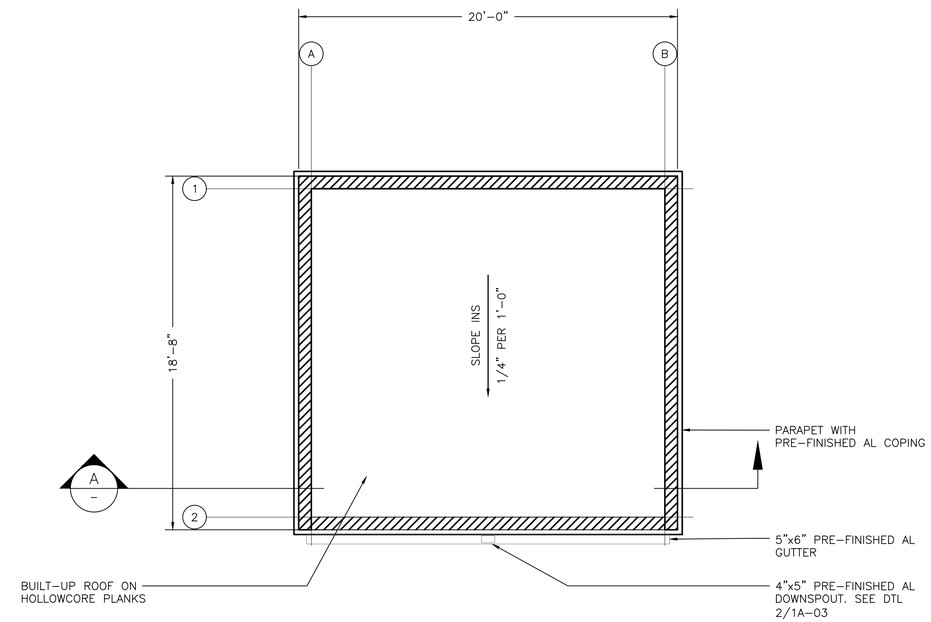

ROOF PLAN

1/4" = 1'-0"

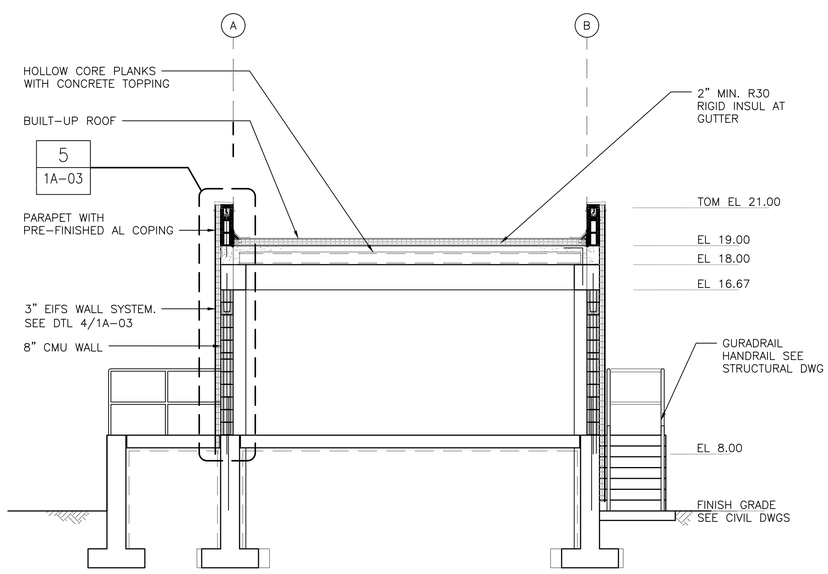

SECTION A

1/4" = 1'-0"

LIFE SAFETY ANALYSIS

APPLICABLE CODES:

FLORIDA BUILDING CODE 7th EDITION (2020) BUILDING
FLORIDA BUILDING CODE 7th EDITION (2020) ACCESSIBILITY
FLORIDA BUILDING CODE 7th EDITION (2020) ENERGY CONSERVATION
FLORIDA BUILDING CODE 7th EDITION (2020) FUEL GAS
FLORIDA BUILDING CODE 7th EDITION (2020) MECHANICAL
FLORIDA BUILDING CODE 7th EDITION (2020) PLUMBING
FLORIDA BUILDING CODE 7th EDITION (2020) TEST PROTOCOLS
FLORIDA FIRE PREVENTION CODE: 7TH EDITION (CONTAINING 2018 EDITION OF NFPA 1 AND NFPA 101 WITH FLORIDA AMENDMENTS)
NATIONAL ELECTRIC CODE, 2017 EDITION

OCCUPANCY CLASSIFICATION:
GROUP U (SEE NOTE 2) 1

CONSTRUCTION TYPE:
TYPE II-B
1 UNPROTECTED (UNSPRINKLERED) (PER FBC 602.2)
MAXIMUM NUMBER OF STORIES = 2 (PER FBC TABLE 504.4)
PROPOSED NUMBER OF STORIES = 1
MAXIMUM AREA (PER FLOOR) = 8,500 SF (PER FBC TABLE 506.2)
1 PROPOSED AREA = 1ST FLOOR 393 SF
MAXIMUM BUILDING HEIGHT =55' (PER FBC TABLE 504.3)
PROPOSED BUILDING HEIGHT =16'< 55'

OCCUPANT LOAD:
TOTAL OCCUPANT LOAD = 2 OCCUPANT (393/300)

EGRESS CAPACITY:
EGRESS CAPACITY EXCEEDS OCCUPANT LOAD.
0.2 INCHES PER OCCUPANT (FBC 1005.3.2) AT DOORS
0.3 INCHES PER OCCUPANT (FBC 1005.3.1) AT STAIRS
MINIMUM CORRIDOR WIDTH = 36 INCHES (FBC 1020.2)
MINIMUM STAIR WIDTH = 36 INCHES (FBC 1011.2)
MINIMUM CLEAR OPENING OF EXIT DOORS = 32 INCHES (FBC 1010.1.1)

1.) STAIRWAYS
2 OCCUPANT x 0.3 = 0.6" < 36"

2.) OTHER COMPONENTS
BUILDING – 2 OCCUPANTS x 0.2 = 0.4" < 36"

EXIT ACCESS TRAVEL DISTANCE:
GROUP "U" WITHOUT SPRINKLER SYSTEM
1 MAXIMUM TRAVEL DISTANCE TO EXIT = 300 FT. (PER FBC TABLE 1017.2)
ACTUAL TRAVEL DISTANCE TO EXIT = 19 FT. < 300 FT.

EXIT ACCESS COMMON PATH OF TRAVEL:
1 GROUP "U" WITHOUT SPRINKLER SYSTEM
COMMON PATH OF TRAVEL = 100 FT. (PER FBC 1006.2.1)
ACTUAL COMMON PATH OF TRAVEL = 0 FT.

EXIT ACCESS DEAD END CORRIDORS:
1 GROUP "U" WITHOUT SPRINKLER SYSTEM
20' MAXIMUM LENGTH (FBC 1020.4)

FIRE PROTECTION REQUIREMENTS:

(PER FBC, 2017, TABLE 601)	"0 HRS"	NON-BEARING WALLS (INT)	"0 HR"
STRUCTURAL FRAME	"0 HRS"	FLOOR CONSTRUCTION	"0 HR"
BEARING WALLS (INT)	"0 HRS"	ROOF CONSTRUCTION	"0 HR"
(EXT)	"0 HRS"		

ORDINARY HAZARD FIRE EXTINGUISHER REQUIREMENTS:
1 GROUP U PER FBC. INDUSTRIAL OCCUPANCY – ORDINARY HAZARD PER FFPC SECTION 6.6
FLORIDA FIRE PROTECTION CODE 2020 EDITION (BASED ON NFPA 1 AND NFPA 101, LIFE SAFETY CODE, 2018 EDITION)

FIRE EXTINGUISHER: 40A:60BC – DRY CHEMICAL DESIGN CRITERIA:
FLOOR AREA = 1500 – TRAVEL DISTANCE = 75 FT.

PLUMBING FIXTURES:
BUILDING IS UNOCCUPIED. PER FBC– PLUMBING: 401.2 TYPES OF OCCUPANCIES NOT SHOWN IN 401.2 SHALL BE CONSIDERED INDIVIDUALLY BY CODE OFFICIAL.

LIFE SAFETY LEGEND

▲	ENTRANCE/EXIT		EMERGENCY LIGHT FIXTURE	⊗	EXIT SIGN
← - - -	DIRECTION OF TRAVEL		3-HOUR FIRE RATED CMU WALL	H⊗	EXIT SIGN WALLMOUNT
●	DEAD END CORRIDOR		NON-FIRE RATED CMU WALL	F	FIRE ALARM PULL STATION WALL MOUNTED 48" A.F.F
FE	FIRE EXTINGUISHER	F	FIRE AUDIBLE & VISUAL ALARM	ESE	EMERGENCY SHOWER AND EYEWASH- SEE MECH DWGS
⊗CO_2	CARBON DIOXIDE EXTINGUISHER				

1/4"=1'-0" 1 0 1 2 3 7'

Hazen

HAZEN AND SAWYER
4000 HOLLYWOOD BLVD, SUITE 750N
HOLLYWOOD, FLORIDA 33021

NOTES:

1. PROVIDE TACTICAL EXIT SIGNAGE AT ALL REQUIRED EXIT DOORS.
2. THE CONSTRUCTION OF THE ELECTRICAL ROOM AREA DEPICTED IN THESE SUBMITTALS/PLANS WILL NOT REQUIRE THE STRUCTURE/BUILDING TO BE PROTECTED BY AN AUTOMATIC FIRE SPRINKLER SYSTEM WITH THE UNDERSTANDING AND ACKNOWLEDGEMENT THAT THERE SHALL BE NO STORAGE OF COMBUSTIBLE AND/OR FLAMMABLE MATERIALS WITHIN THIS AREA.
3. PROVIDE TWO (2) SIGNS STATING "NO STORAGE OF COMBUSTIBLE AND/OR FLAMMABLE MATERIALS PERMITTED" SIGNS SHALL BE POSTED IN LOCATIONS APPROVED BY THE FIRE INSPECTOR. SEE SPECIFICATION 10400.
4. EIFS SHALL BE A LARGE AND SMALL MISSILE HURRICANE IMPACT RESISTANT SYSTEM.

ENGINEER:
DEAN AVERY WALDROP
REG. No. 58330
DATE: 05/12/22
TEL: 954-987-0066
FAX: 954-987-2949

DRAWN BY: LM	DATE: 05/12/22		
DESIGNED BY: WHR	SCALE: 1"=20'		
CHECKED BY: DAW			
FIELD BOOK: XXXX			

CITY OF FORT LAUDERDALE
PUBLIC WORKS DEPARTMENT
ENGINEERING & ARCHITECTURE
100 North Andrews Avenue, Fort Lauderdale, Florida 33301

REVISIONS

NO.	DATE	BY	CHK'D	DESCRIPTION
1	8/11/22	JNM	WHR	ADDENDUM 2

BID DOCUMENTS

PROJECT # 12745
STORMWATER IMPROVEMENTS
RIVER OAKS PUMP STATIONS
ELECTRICAL BUILDING CODE, PLAN AND SECTION

SHEET NO.
1A-01

TOTAL: 85

CAD FILE: 12745-1A01

DRAWING FILE NO. 4-142-97

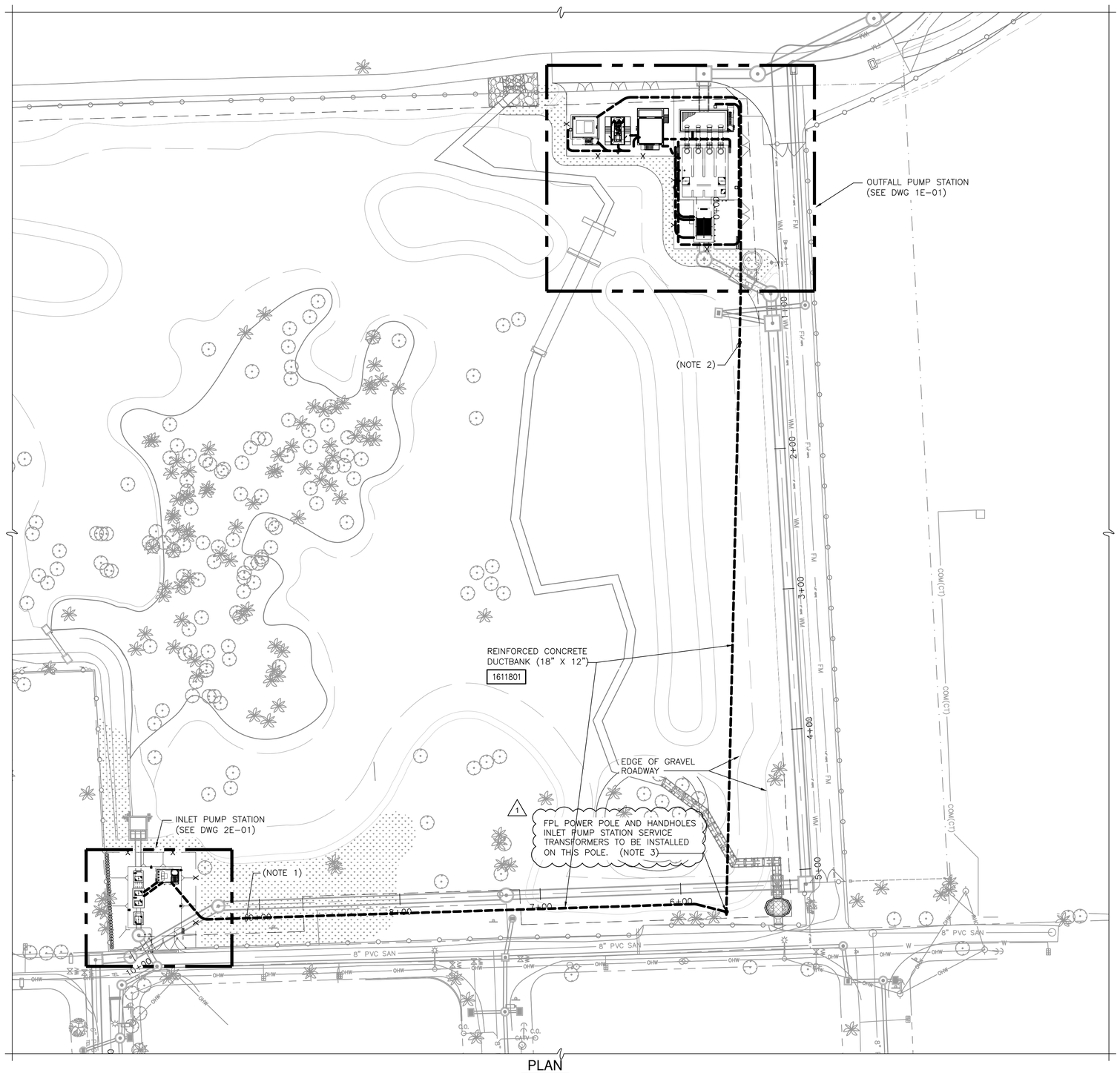

PLAN
1"=40'-0"

Hazen

HAZEN AND SAWYER
4000 HOLLYWOOD BLVD, SUITE 750N
HOLLYWOOD, FLORIDA 33021

NOTES:

1. SERVICE WIRING DUCTBANK, CONDUIT AND CONDUCTORS BY CONTRACTOR. SEE DRAWING 2E-01 FOR EXPANDED VIEW.
2. FPL UNDERGROUND PRIMARY CONDUITS/DUCTBANK. CONDUITS FURNISHED BY FPL FOR INSTALLATION BY CONTRACTOR. SEE DRAWING 1E-01 FOR CONTINUATION.
3. TENTATIVE LOCATION OF PROPOSED FPL UTILITY POLE. COORDINATE FINAL LOCATION WITH FPL. THIS POLE SHALL HAVE THE FPL TRANSFORMERS TO SUPPLY POWER TO THE INLET PUMP STATION.
4. CONTRACTOR SHALL COORDINATE ALL DETAILS OF THE UTILITY INSTALLATION WITH THE UTILITY. ALL WORK SHALL MEET THE REQUIREMENTS OF THE UTILITY.
5. ALL ELECTRICAL DUCTBANKS SHALL BE ENCASED IN REINFORCED CONCRETE.

0 40' 80'

BID DOCUMENTS

ENGINEER:
JAMES P. BOWLES
REG. No. 49123
DATE: 05/12/22

TEL: 954-987-0066
FAX: 954-987-2949

DRAWN BY: TR	DATE: 05/12/22
DESIGNED BY: JPB	SCALE: 1"=40'
CHECKED BY: JBP	
FIELD BOOK: XXXX	

CITY OF FORT LAUDERDALE
PUBLIC WORKS DEPARTMENT
ENGINEERING & ARCHITECTURE
100 North Andrews Avenue, Fort Lauderdale, Florida 33301

REVISIONS

NO.	DATE	BY	CHK'D	DESCRIPTION
1	8/11/22	JMB	JNM	ADDENDUM 2

PROJECT # 12745
STORMWATER IMPROVEMENTS
RIVER OAKS PUMP STATIONS
OVERALL ELECTRICAL SITE PLAN

SHEET NO.
E-03

TOTAL: 85

CAD FILE:
12745-E03

DRAWING FILE NO.
4-142-97

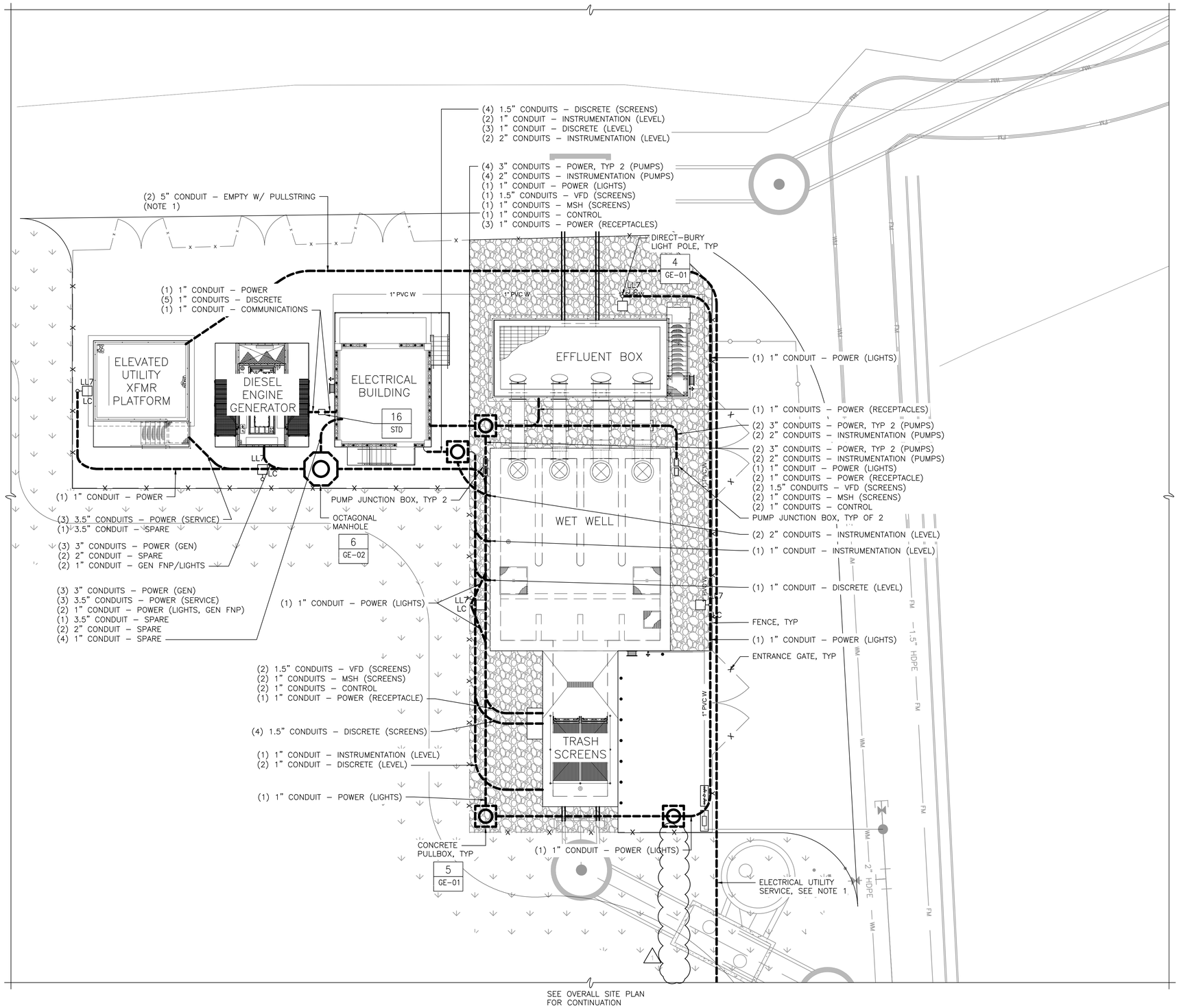

PLAN

1"=10'–0"

Hazen

HAZEN AND SAWYER
4000 HOLLYWOOD BLVD, SUITE 750N
HOLLYWOOD, FLORIDA 33021

NOTES:

1. UNDERGROUND PRIMARY CONDUIT FROM FPL POWER POLE, FURNISHED BY FPL FOR INSTALLATION BY CONTRACTOR. ALL WORK SHALL MEET THE REQUIREMENTS OF THE UTILITY.
2. MOUNTING HEIGHT FOR POLE–MOUNT LUMINAIRES SHALL BE 12'–0" ABOVE GRADE.
3. SEE INDIVIDUAL STRUCTURE DRAWINGS FOR FURTHER DETAILS.

ENGINEER: JAMES P. BOWLES
REG. No: 49123
DATE: 05/12/22
TEL: 954–987–0066
FAX: 954–987–2949

DRAWN BY: TR	DATE: 05/12/22
DESIGNED BY: JPB	SCALE: 1"=10'
CHECKED BY: JBP	
FIELD BOOK: XXXX	

CITY OF FORT LAUDERDALE
PUBLIC WORKS DEPARTMENT
ENGINEERING & ARCHITECTURE
100 North Andrews Avenue, Fort Lauderdale, Florida 33301

REVISIONS

NO.	DATE	BY	CHKD	DESCRIPTION
1	8/11/22	JMB	JNM	ADDENDUM 2

PROJECT # 12745
STORMWATER IMPROVEMENTS
RIVER OAKS PUMP STATIONS
SITE PLAN - OUTFALL STATION

BID DOCUMENTS

SHEET NO.
1E-01
TOTAL: 85
CAD FILE: 12745–1E01
DRAWING FILE NO. 4–142–97

DUCT CONSTRUCTION SCHEDULE

SERVICE	PRESSURE CLASS	DUCT MATERIAL	LEAKAGE CLASS	SEAL CLASS	CONSTRUCTION STD
ALL DUCT	+/- 2 I.W.G.	300 SERIES SST	12	A	SMACNA HVAC DUCT CONSTRUCTION STD

1

DESIGN TEMPERATURE CONDITIONS

FT. LAUDERDALE	COOLING	HEATING
AMBIENT CONDITIONS	91 F DB/77 F WB	46 F DB/39 F WB
ELECTRICAL ROOM	85 F	55 F

1

Hazen

HAZEN AND SAWYER
4000 HOLLYWOOD BLVD, SUITE 750N
HOLLYWOOD, FLORIDA 33021

AIR COOLED CONDENSING SCHEDULE

MARK No.	LOCATION	AREA SERVED	MANUFACTURER	MODEL No.	*CAPACITY BTU/HR		SEER	EER	MIN. AMBIENT TEMP.	MAX. AMBIENT TEMP.	AIRFLOW CFM	SOUND POWER dB.	REFRIGERANT			ELECTRIC			WEIGHT LBS.	NOTES
					TOTAL	SENSIBLE							TYPE	GAS	LIQUID	MCA	OPD	V/P/HZ		
CU-1	RIVER OAKS	ELECTRICAL ROOM	TRANE/MITSUBISHI	PUY-A36NKA7	36,000	28,400	19.3	9.8	23° F	115° F	3,880	52	R-410A	5/8"	3/8"	25	30	208/1/60	215	1,2,3,4
CU-2	RIVER OAKS	ELECTRICAL ROOM	TRANE/MITSUBISHI	PUY-A36NKA7	36,000	28,400	19.3	9.8	23° F	115° F	3,880	52	R-410A	5/8"	3/8"	25	30	208/1/60	215	1,2,3,4

* 70° F EWB, 85° F EDB AND 91° F DB / 77° F WB AMBIENT

NOTES:
1. WIRED REMOTE CONTROLLER
2. 5 YEAR COMPRESSOR WARRANTY
3. MANUFACTURER OR THIRD PARTY PROVIDED PHENOLIC EPOXY COIL COATING
4. OR EQUAL

AIR HANDLING UNIT SCHEDULE

MARK No.	LOCATION	AREA SERVED	MANUFACTURER	MODEL No.	*CAPACITY BTU/HR		FAN DATA				SEER/EER	FILTER		ELECTRIC HEAT		ELECTRIC			WEIGHT LBS.	NOTES
					TOTAL	SENSIBLE	RPM/BHP	CFM	H.P.	E.S.P.		NUMBER	SIZE INCHES	STAGES	K.W.	MCA	OPD	V/P/HZ		
AHU-1	RIVER OAKS	ELECTRICAL ROOM	TRANE/MITSUBISHI	PVA-A36AA7	36,000	28,400	VARIES/0.1	1,000	1/2	0.7	19.3/9.8	1	20"x20"	-	-	5.5	15	208/230/1/60	175	1,2,3,4
AHU-2	RIVER OAKS	ELECTRICAL ROOM	TRANE/MITSUBISHI	PVA-A36AA7	36,000	28,400	VARIES/0.1	1,000	1/2	0.7	19.3/9.8	1	20"x20"	-	-	5.5	15	208/230/1/60	175	1,2,3,4

* 70° F EWB, 85° F EDB AND 91° F DB / 77° F WB AMBIENT

NOTES:
1. MANUFACTURER PROVIDED WIRED REMOTE SEVEN DAY PROGRAMMABLE THERMOSTAT WITH AUTOMATIC HEAT/COOL CHANGEOVER
2. INLINE CONDENSATE PUMP
3. MANUFACTURER OR THIRD PARTY PROVIDED PHENOLIC EPOXY COIL COATING
4. OR EQUAL

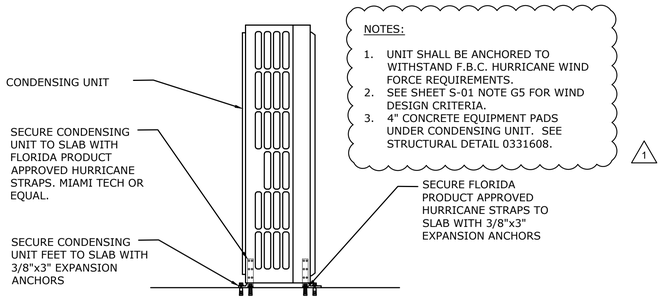

5 CONDENSING UNIT ANCHOR
NTS

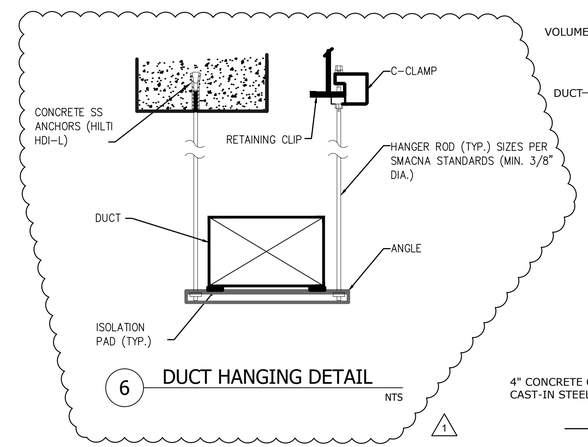

6 DUCT HANGING DETAIL
NTS

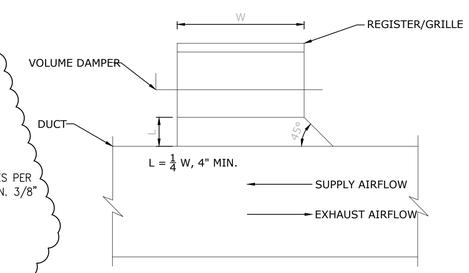

1 DUCT REGISTER/GRILLE
NTS

NOTES:

1. ALLOW SUFFICIENT SPACE BELOW DRAIN PAN FOR TRAP.
2. PITCH DRAIN FOR PROPER RUNOFF.
3. MANUALLY PRIME FILL TRAP BEFORE START-UP TO FORM INITIAL DRAIN SEAL. SUPPORT LENGTHY DRAIN LINES TO PREVENT SAG.
4. SLOPE CONDENSATE PIPING A MINIMUM OF 1" PER 10' TO OUTLET.

BLOW THROUGH COIL (POSITIVE PRESSURE):

(a) 1 INCH FOR EACH INCH OF POSITIVE PRESSURE PLUS 1 INCH (POSITIVE STATIC PRESSURE IN INCHES WG WITH DIRTY FILTERS, COILS, AND MAXIMUM AIR FLOW)

(b) THIS DIMENSION IN INCHES MUST BE EQUAL TO MIN. 1/2 OF THE (a) ABOVE

(c) EQUALS (a) + (b) + PIPE DIA. + + INSULATION

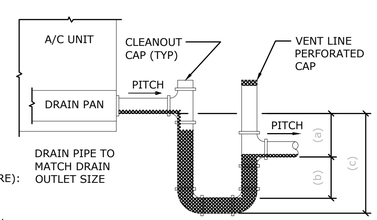

4 CONDENSATE TRAP
NTS

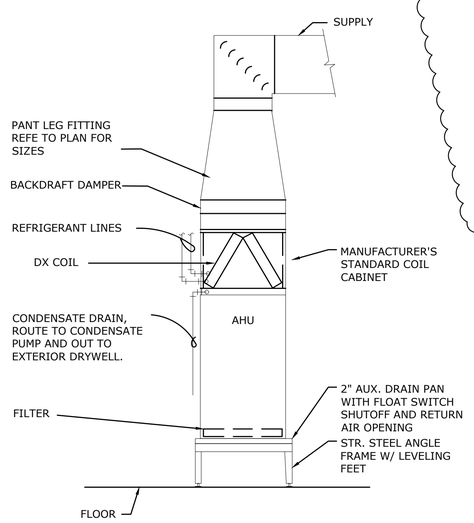

3 AIR HANDLING UNIT
NTS

NOTES:

1. ALL COPPER PIPE SHALL RECEIVE A CORROSION RESISTANT COATING. SEE SPECIFICATION 15553 FOR DETAILS.
2. CONDENSATE PIPING LOCATED INSIDE OF THE STATION SHALL BE INSULATED. CONDENSATE PIPING LOCATED OUTSIDE SHALL NOT BE INSULATED. INSULATION SHALL TERMINATE AT MECHANICAL SEAL. SEE SPECIFICATION 15553 FOR DETAILS.

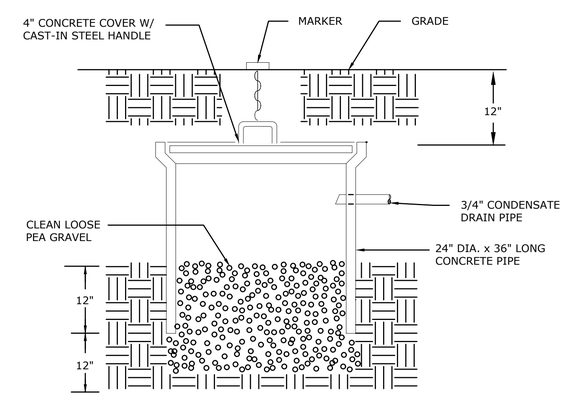

2 DRY WELL
NTS

BID DOCUMENTS

ENGINEER: NORMAN E. BARTLEY
REG. No: 61112
DATE: 05/12/22
TEL: 954-987-0066
FAX: 954-987-2949

DRAWN BY: TLM | DATE: 05/12/22
DESIGNED BY: TLM | SCALE: N/A
CHECKED BY: NEB | FIELD BOOK: XXXX

CITY OF FORT LAUDERDALE
PUBLIC WORKS DEPARTMENT
ENGINEERING & ARCHITECTURE
100 North Andrews Avenue, Fort Lauderdale, Florida 33301

REVISIONS

NO.	DATE	BY	CHK'D	DESCRIPTION
1	8/11/22	JMB	JNM	ADDENDUM 2

PROJECT # 12745
STORMWATER IMPROVEMENTS
RIVER OAKS PUMP STATIONS
ELECTRICAL BUILDING - OUTFALL STATION - SCHEDULES

SHEET NO.
1H-02
TOTAL: 85
CAD FILE: 12745-1H02
DRAWING FILE NO. 4-142-97

ADDENDUM NO. 3

ITB No. 12712-123

River Oaks Pumpstations Project 12745

ISSUED: 08/16/2022

This addendum is being issued to make the following clarification(s):

1. Bidders are to review and comply with federal-aid requirements mentioned on the "EPA Federal Requirements" document posted to Bidsync under the "Documents" category, specifically; **American Iron and Steel (AIS) Requirement and Davis-Bacon Wage Rate Requirement**.

All other terms, conditions, and specifications remain unchanged.

Fausto Vargas
Senior Procurement Specialist

Company Name: _____
(please print)

Bidder's Signature: _____

Date: _____

DRAWING INDEX

CITY OF FORT LAUDERDALE

PROJECT #11868
STORMWATER IMPROVEMENTS
RIVER OAKS NEIGHBORHOOD

FORT LAUDERDALE, FLORIDA

Patrick J. Gibney, State of Florida, Professional Engineer, License No. 49428 This item has been electronically signed and sealed by Patrick J. Gibney on the date indicated here using an SHA authentication code. Printed copies of this document are not considered signed and sealed and the SHA authentication code must be verified on any electronic copies.
8/26/2021

Hazen

HAZEN AND SAWYER
4000 HOLLYWOOD BLVD, SUITE 750N
HOLLYWOOD, FLORIDA 33021

Certificate of Authorization No: 2771

Patrick J. Gibney
Florida P.E. No. 49428

CRAVEN • THOMPSON AND ASSOCIATES, INC.
ENGINEERS • PLANNERS • SURVEYORS
3563 N.W. 53RD STREET, FORT LAUDERDALE, FLORIDA 33309
FAX: (954) 739-6409 TEL.: (954) 739-6400
FLORIDA LICENSED ENGINEERING, SURVEYING & MAPPING BUSINESS No. 271
FLORIDA LICENSED LANDSCAPE ARCHITECTURE BUSINESS No. C000114

MATERIAL SHOWN HEREON IS THE PROPERTY OF CRAVEN•THOMPSON & ASSOCIATES, INC. AND SHALL NOT BE REPRODUCED IN WHOLE OR IN PART WITHOUT PERMISSION OF CRAVEN• THOMPSON & ASSOCIATES, INC. WRITING CRAVEN • THOMPSON & ASSOCIATES, INC. COPYRIGHT © 2017

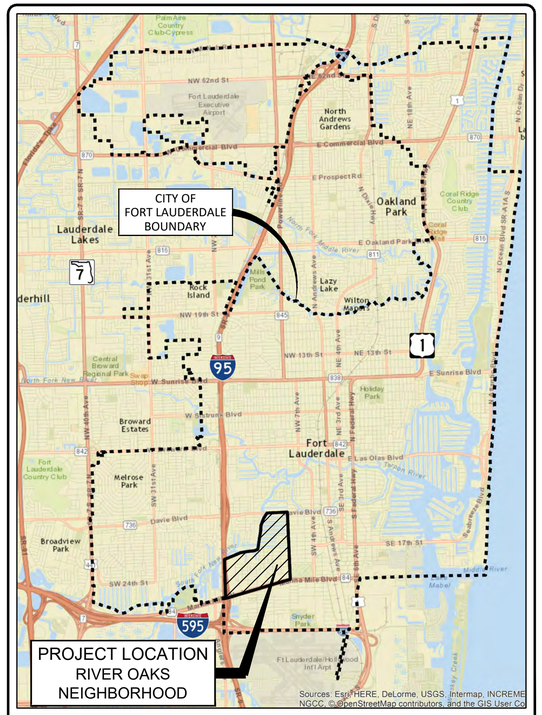

NORTH

LOCATION SKETCH

PROJECT #11868
STORMWATER IMPROVEMENTS
RIVER OAKS NEIGHBORHOOD

CITY OF FORT LAUDERDALE
PUBLIC WORKS DEPARTMENT
ENGINEERING & ARCHITECTURE
100 North Andrews Avenue, Fort Lauderdale, Florida 33301

FORT LAUDERDALE CITY COMMISSION

DEAN J. TRANTALIS	MAYOR
HEATHER MORAITIS	COMMISSIONER - DISTRICT I
STEVEN GLASSMAN	COMMISSIONER - DISTRICT II
ROBERT L. McKINZIE	COMMISSIONER - DISTRICT III
BEN SORENSEN	COMMISSIONER - DISTRICT IV

PROJECT MANAGER	JOB TITLE	PHONE NO.
PATRICK J. GIBNEY, P.E.	CONSULTANT	954-739-6400

DATE: 01/07/2019

CAD FILE: 11868-GG-GN01

DRAWING FILE No.: 4-142-42

CONFORMED SET

ADDENDUM #5 REVISION SUMMARY

Hazen

HAZEN AND SAWYER
4000 HOLLYWOOD BLVD, SUITE 750N
HOLLYWOOD, FLORIDA 33021
Certificate of Authorization No: 2771

CRAVEN • THOMPSON AND ASSOCIATES, INC.
ENGINEERS • PLANNERS • SURVEYORS
3563 N.W. 53RD STREET, FORT LAUDERDALE, FLORIDA 33309
FAX: (954) 739-6409 TEL: (954) 739-6400
FLORIDA LICENSED ENGINEERING, SURVEYING & MAPPING BUSINESS No. 271
FLORIDA LICENSED LANDSCAPE ARCHITECTURE BUSINESS No. C000114

MATERIAL SHOWN HEREON IS THE PROPERTY OF CRAVEN•THOMPSON & ASSOCIATES, INC. AND SHALL NOT BE REPRODUCED IN WHOLE OR IN PART WITHOUT PERMISSION OF CRAVEN THOMPSON & ASSOCIATES, INC. WRITING CRAVEN • THOMPSON & ASSOCIATES, INC. COPYRIGHT © 2017

COMPLETE SHEET UPDATE	NEW SHEET	REMOVE SHEET	SHEET NUMBER	SHEET NAME	DESCRIPTION OF CHANGE
X			GG-GN-01	TITLE SHEET AND LOCATION MAP	ADDED NOT FOR CONSTRUCTION NOTE & ADDED ENGINEER OF RECORD CONTACT.
	X		GG-GN-01A	ADDENDUM #5 REVISION SUMMARY	NEW SHEET. OUTLINE OF REVISIONS & DESCRIPTION OF CHANGES.
X			GG-GN-02	LIST OF DRAWINGS	COMPLETE SHEET UPDATE. 254 TOTAL SHEETS IN BID SET & 127 SHEETS IDENTIFIED WITH REVISION BLOCK NUMBER 1 FOR ADDED, REVISED, REMOVED OR REISSUED UNDER ADDENDUM #5. SHIFTED THE "CIVIL – STORMWATER FORCE MAIN" SECTION TO BE LOCATED UNDER THE "CIVIL – UTILITY RELOCATION" SECTION OF THE BID SET.
X			GG-GN-04	SYMBOLS	COMPLETE SHEET UPDATE. REMOVED "CONTRACTOR STAGING AREA" AND ADDED "ASPHALT ACCESS ROAD" HATCH.
X			GG-GN-07	CONTAMINATED SITES LOCATION SITE PLAN & KEY MAP	COMPLETE SHEET UPDATE. UPDATED UTILITIES SHOWN.
X			GG-GN-08	CONTAMINATED SITES LOCATION SITE PLAN	COMPLETE SHEET UPDATE. UPDATED UTILITIES SHOWN.
X			GG-GN-09	CONTAMINATED SITES LOCATION SITE PLAN	COMPLETE SHEET UPDATE. UPDATED UTILITIES SHOWN.
X			GG-GN-10	CONTAMINATED SITES LOCATION SITE PLAN	COMPLETE SHEET UPDATE. UPDATED UTILITIES SHOWN.
X			GG-GN-11	CONTAMINATED SITES LOCATION SITE PLAN	COMPLETE SHEET UPDATE. UPDATED UTILITIES SHOWN.
X			CX-KY-01	EXISTING CONDITIONS & DEMOLITION PLAN SITE KEY MAP	COMPLETE SHEET UPDATE. PROVIDED ADDITIONAL VIEWPORT FOR CX-ST-49.
X			CX-ST-03	EXISTING CONDITIONS & DEMOLITION PLAN	COMPLETE SHEET UPDATE. ADDED EXISTING ASPHALT REMOVAL HATCHING WITHIN TOP VIEWPORT.
X			CX-ST-18	EXISTING CONDITIONS & DEMOLITION PLAN	COMPLETE SHEET UPDATE. ADDED LABELS TO TOP VIEWPORT & MOVED LABELS ON BOTTOM VIEWPORT FOR CLARITY.
X			CX-ST-23	EXISTING CONDITIONS & DEMOLITION PLAN	COMPLETE SHEET UPDATE. SLIGHT MODIFICATION TO CURB TO BE REMOVED LABELS ON BOTH VIEWPORTS FOR CLARITY
X			CX-ST-25	EXISTING CONDITIONS & DEMOLITION PLAN	COMPLETE SHEET UPDATE. ADDED EXISTING ASPHALT REMOVAL HATCHING WITHIN TOP VIEWPORT.
X			CX-ST-26	EXISTING CONDITIONS & DEMOLITION PLAN	COMPLETE SHEET UPDATE. ADDED 15" RCP ABANDONMENT & ASPHALT REMOVAL HATCHING WITHIN BOTTOM VIEWPORT.
X			CX-ST-29	EXISTING CONDITIONS & DEMOLITION PLAN	COMPLETE SHEET UPDATE. ADDED ADDITIONAL SURVEY INFORMATION WITHIN BOTH VIEWPORTS.
X			CX-ST-40	EXISTING CONDITIONS & DEMOLITION PLAN	COMPLETE SHEET UPDATE. ADDED EXISTING CONCRETE & ASPHALT REMOVAL HATCHING WITHIN BOTH VIEWPORTS.
X			CX-ST-41	EXISTING CONDITIONS & DEMOLITION PLAN	COMPLETE SHEET UPDATE. ADDED ADDITIONAL SURVEY INFORMATION AND ADDED EXISTING ASPHALT REMOVAL HATCHING WITHIN TOP VIEWPORT.
X			CX-ST-42	EXISTING CONDITIONS & DEMOLITION PLAN	COMPLETE SHEET UPDATE. ADDED ADDITIONAL SURVEY INFORMATION ON BOTH VIEWPORTS.
X			CX-ST-43	EXISTING CONDITIONS & DEMOLITION PLAN	COMPLETE SHEET UPDATE. ADDED ADDITIONAL SURVEY INFORMATION AND SLIGHT MODIFICIATION OF CALLOUTS ON BOTH VIEWPORTS.
X			CX-ST-44	EXISTING CONDITIONS & DEMOLITION PLAN	COMPLETE SHEET UPDATE. ADDITIONAL SURVEY INFORMATION ON BOTTOM VIEWPORT AND ADDITIONAL MATCHLINE FOR SW 17TH AVE.
X			CX-ST-45	EXISTING CONDITIONS & DEMOLITION PLAN	COMPLETE SHEET UPDATE. ADDITIONAL SURVEY INFORMATION ON BOTTOM VIEWPORT AND ADDITIONAL MATCHLINE FOR SW 17TH AVE.
X			CX-ST-49	EXISTING CONDITIONS & DEMOLITION PLAN	COMPLETE SHEET UPDATE. ADDED ADDITIONAL VIEWPORT FOR SW 17TH AVENUE AND ADDITIONAL SURVEY INFORMATION.
X			CX-ST-51	EXISTING CONDITIONS & DEMOLITION PLAN	COMPLETE SHEET UPDATE. ADDED EXISTING ASPHALT REMOVAL HATCHING WITHIN BOTTOM VIEWPORT.
X			CX-ST-53	EXISTING CONDITIONS & DEMOLITION PLAN	COMPLETE SHEET UPDATE. ADDED CALLOUT FOR GAS RELOCATION AND ADDITIONAL SURVEY INFORMATION ON BOTH VIEWPORTS.
X			CX-ST-54	EXISTING CONDITIONS & DEMOLITION PLAN	COMPLETE SHEET UPDATE. ADDITIONAL SURVEY INFORMATION ON BOTH VIEWPORTS.
X			CU-KY-01	STORM DRAINAGE PLAN SITE KEY MAP	COMPLETE SHEET UPDATE. PROVIDED ADDITIONAL VIEWPORT FOR CU-ST-49B.
X			CU-CV-01	CHECK VALVE & PIPE LINING OVERALL PLAN	COMPLETE SHEET UPDATE. PROVIDED ADDITIONAL CHECK VALVE AT SW 13TH CIRCLE. PROVIDED OUTFALL PIPING TO BE CIPP LINED AND TYPICAL NOTE. TURNED OFF BLOCKS THAT WERE NOT RELEVANT TO PLAN SHEET.
	X		CU-SS-01	SUMMARY OF STORMWATER STRUCTURES	NEW SHEET ADDED TO SET. SHEET PROVIDES A SUMMARY OF STORMWATER STRUCTURES.
	X		CU-SS-02	SUMMARY OF STORMWATER STRUCTURES	NEW SHEET ADDED TO SET. SHEET PROVIDES A SUMMARY OF STORMWATER STRUCTURES.
	X		CU-SP-01	SUMMARY OF STORMWATER PIPES	NEW SHEET ADDED TO SET. SHEET PROVIDES A SUMMARY OF STORMWATER PIPES.
	X		CU-SP-02	SUMMARY OF STORMWATER PIPES	NEW SHEET ADDED TO SET. SHEET PROVIDES A SUMMARY OF STORMWATER PIPES.
X			CU-ST-01A	STORM DRAINAGE PLAN & PROFILE	COMPLETE SHEET UPDATE. MOVED LABEL ON PROFILE FOR GAS MAIN CROSSING FOR PLAN CLARITY.
X			CU-ST-01B	STORM DRAINAGE PLAN & PROFILE	COMPLETE SHEET UPDATE. MOVED LABEL ON PROFILE FOR GAS MAIN CROSSING FOR PLAN CLARITY.
X			CU-ST-02A	STORM DRAINAGE PLAN & PROFILE	COMPLETE SHEET UPDATE. MOVED LABEL ON PROFILE FOR GAS MAIN CROSSING FOR PLAN CLARITY.
X			CU-ST-18A	STORM DRAINAGE PLAN & PROFILE	COMPLETE SHEET UPDATE. REMOVED 16" STORMWATER FORCE MAIN CONNECTION AT THE BOX CULVERT (PLAN AND PROFILE)
X			CU-ST-18B	STORM DRAINAGE PLAN & PROFILE	COMPLETE SHEET UPDATE. REMOVED 16" STORMWATER FORCE MAIN AND SHIFTED LOCATION OF EXISTING GAS MAIN IN PLAN VIEW.
X			CU-ST-19A	STORM DRAINAGE PLAN & PROFILE	COMPLETE SHEET UPDATE. SHIFTED 16" STORMWATER FORCE MAIN AND PROVIDED CONNECTION INTO NEW 12'X6' CONFLICT STRUCTURE (S422). REMOVED 9'X9' CONFLICT STRUCTURE (S477) AND REMOVED 16" STORMWATER FORCE MAIN ALONG SW 20TH STREET. PROVIDED UPDATES TO PROFILE.
X			CU-ST-21B	STORM DRAINAGE PLAN & PROFILE	COMPLETE SHEET UPDATE. REMOVED CONNECTIONS TO THE EXISTING 72" RCP STORM DRAINAGE PIPE ALONG SW 12TH AVE. REMOVED 4'X4' CATCH BASIN (S413) AND PROVIDED NEW 15'X5' CONFLICT STRUCTURE (S496) TO ELIMINATE CONNECTION TO 72" STORM DRAINAGE PIPE AND PROVIDE CONNECTION TO NEW PUMP STATION #3C.
X			CU-ST-22A	STORM DRAINAGE PLAN & PROFILE	COMPLETE SHEET UPDATE. SHIFTED NORTH ARROW FOR PLAN CLARITY.
X			CU-ST-24B	STORM DRAINAGE PLAN & PROFILE	COMPLETE SHEET UPDATE. PROVIDED NEW EDGE OF PAVEMENT LIMITS.
X			CU-ST-25A	STORM DRAINAGE PLAN & PROFILE	COMPLETE SHEET UPDATE. SHIFTED DIMENSIONS AWAY FROM STATION 80003+25 FOR PLAN CLARITY.
X			CU-ST-26A	STORM DRAINAGE PLAN & PROFILE	COMPLETE SHEET UPDATE. SHIFTED LABEL OVERLAPPING MANHOLE (S228).
X			CU-ST-26B	STORM DRAINAGE PLAN & PROFILE	COMPLETE SHEET UPDATE. REMOVED CONNECTIONS TO THE EXISTING 72" RCP STORM DRAINAGE PIPE ALONG SW 12TH AVE. REMOVED 4'X4' CATCH BASIN (S413) AND PROVIDED NEW 15'X5' CONFLICT STRUCTURE (S496) TO ELIMINATE CONNECTION TO 72" STORM DRAINAGE PIPE AND PROVIDE CONNECTION TO NEW PUMP STATION #3C. SHIFTED STORMWATER FORCE MAIN ROUTING ALONG SW 12TH AVE. PROVIDED UPDATES TO PROFILE.
X			CU-ST-31B	STORM DRAINAGE PLAN & PROFILE	COMPLETE SHEET UPDATE. PROVIDED NEW EDGE OF PAVEMENT LIMITS. PROVIDED ADDITIONAL LABELS TO CLARIFY TEMPORARY 24" HDPE PIPING.
X			CU-ST-32A	STORM DRAINAGE PLAN & PROFILE	COMPLETE SHEET UPDATE. PROVIDED NEW EDGE OF PAVEMENT LIMITS. PROVIDED ADDITIONAL LABELS TO CLARIFY TEMPORARY 24" HDPE PIPING. UPDATED S361 & S482 LABELS TO CLARIFY CONNECTED PIPES & MATERIAL.
X			CU-ST-35B	STORM DRAINAGE PLAN & PROFILE	COMPLETE SHEET UPDATE. PROVIDED NEW EDGE OF PAVEMENT LIMITS.
X			CU-ST-36A	STORM DRAINAGE PLAN & PROFILE	COMPLETE SHEET UPDATE. PROVIDED NEW EDGE OF PAVEMENT LIMITS.
X			CU-ST-37A	STORM DRAINAGE PLAN & PROFILE	COMPLETE SHEET UPDATE. PROVIDED NEW EDGE OF PAVEMENT LIMITS.
X			CU-ST-38A	STORM DRAINAGE PLAN & PROFILE	COMPLETE SHEET UPDATE. PROVIDED NEW EDGE OF PAVEMENT LIMITS.
X			CU-ST-38B	STORM DRAINAGE PLAN & PROFILE	COMPLETE SHEET UPDATE. PROVIDED NEW EDGE OF PAVEMENT LIMITS.
X			CU-ST-39A	STORM DRAINAGE PLAN & PROFILE	COMPLETE SHEET UPDATE. PROVIDED NEW EDGE OF PAVEMENT LIMITS.
X			CU-ST-39B	STORM DRAINAGE PLAN & PROFILE	COMPLETE SHEET UPDATE. PROVIDED NEW EDGE OF PAVEMENT LIMITS.
X			CU-ST-40B	STORM DRAINAGE PLAN & PROFILE	COMPLETE SHEET UPDATE. ADDED SURVEY INFORMATION FOR COCONUT DRIVE. SHIFTED LOCATION OF 4'X4' CB (S444) AND 12" CHECK VALVE.
X			CU-ST-41A	STORM DRAINAGE PLAN & PROFILE	COMPLETE SHEET UPDATE. ADDED SURVEY INFORMATION FOR SW 17TH AVE. SHIFTED TEXT CALLOUT INFORMATION FOR PLAN CLARITY.
X			CU-ST-42A	STORM DRAINAGE PLAN & PROFILE	COMPLETE SHEET UPDATE. ADDED SURVEY INFORMATION FOR SW 21ST ST.
X			CU-ST-42B	STORM DRAINAGE PLAN & PROFILE	COMPLETE SHEET UPDATE. ADDED SURVEY INFORMATION FOR SW 22ND ST.
X			CU-ST-43A	STORM DRAINAGE PLAN & PROFILE	COMPLETE SHEET UPDATE. PROVIDED NEW EDGE OF PAVEMENT LIMITS.
X			CU-ST-43B	STORM DRAINAGE PLAN & PROFILE	COMPLETE SHEET UPDATE. PROVIDED NEW EDGE OF PAVEMENT LIMITS.
X			CU-ST-44A	STORM DRAINAGE PLAN & PROFILE	COMPLETE SHEET UPDATE. PROVIDED NEW EDGE OF PAVEMENT LIMITS.
X			CU-ST-44B	STORM DRAINAGE PLAN & PROFILE	COMPLETE SHEET UPDATE. ADDED SURVEY INFORMATION AND ADDITIONAL MATCHLINE FOR SW 17TH AVE. ADDED STORMWATER INFRASTRUCTURE ALONG SW 17TH AVE.
X			CU-ST-45A	STORM DRAINAGE PLAN & PROFILE	COMPLETE SHEET UPDATE. PROVIDED NEW EDGE OF PAVEMENT LIMITS.
X			CU-ST-45B	STORM DRAINAGE PLAN & PROFILE	COMPLETE SHEET UPDATE. ADDED SURVEY INFORMATION AND ADDITIONAL MATCHLINE FOR SW 17TH AVE. ADDED STORMWATER INFRASTRUCTURE ALONG SW 17TH AVE.
X			CU-ST-48A	STORM DRAINAGE PLAN & PROFILE	COMPLETE SHEET UPDATE. PROVIDED NEW EDGE OF PAVEMENT LIMITS.
	X		CU-ST-49B	STORM DRAINAGE PLAN & PROFILE	NEW SHEET ADDED TO SET. PROVIDED ADDITIONAL INFRASTRUCTURE ALONG SW 17TH AVE. PLAN & PROFILE.
X			CU-ST-50A	STORM DRAINAGE PLAN & PROFILE	COMPLETE SHEET UPDATE. PROVIDED NEW EDGE OF PAVEMENT LIMITS.
X			CU-ST-50B	STORM DRAINAGE PLAN & PROFILE	COMPLETE SHEET UPDATE. PROVIDED NEW EDGE OF PAVEMENT LIMITS.
X			CU-ST-51A	STORM DRAINAGE PLAN & PROFILE	COMPLETE SHEET UPDATE. PROVIDED NEW EDGE OF PAVEMENT LIMITS.
X			CU-ST-51B	STORM DRAINAGE PLAN & PROFILE	COMPLETE SHEET UPDATE. PROVIDED NEW EDGE OF PAVEMENT LIMITS.
X			CU-ST-52A	STORM DRAINAGE PLAN & PROFILE	COMPLETE SHEET UPDATE. PROVIDED NEW EDGE OF PAVEMENT LIMITS.
X			CU-ST-53A	STORM DRAINAGE PLAN & PROFILE	COMPLETE SHEET UPDATE. ADDED SURVEY INFORMATION FOR SW 21ST ST. PROVIDED NEW 15'X5' CONFLICT STRUCTURE (S496). REVISED WATER QUALITY STRUCTURE (S491). ADDED NOTES TO RECOVER EXISTING MANHOLE OPENING WITH NEW TOP SLAB AND RIM. PROVIDED UPDATES TO STORMWATER INFRASTRUCTURE ALONG SW 21ST ST. & SW 12TH AVE. FOR CONSISTENCY WITH OTHER PLAN SHEETS. PROVIDED NEW EDGE OF PAVEMENT LIMITS.
X			CU-ST-53B	STORM DRAINAGE PLAN & PROFILE	COMPLETE SHEET UPDATE. ADDED SURVEY INFORMATION FOR SW 21ST ST.
X			CP-KY-01	PAVING & GRADING SITE KEY MAP	COMPLETE SHEET UPDATE. PROVIDED ADDITIONAL VIEWPORT FOR CP-ST-49.
	X		CP-KY-02	PAVING & GRADING OVERALL PLAN	NEW SHEET ADDED TO SET. SHEET ADDED TO PROVIDE OVERALL LIMITS OF PAVING.
X			CP-ST-01	PAVING & GRADING PLAN	COMPLETE SHEET UPDATE. CHANGED PRINT STYLE OF PROPOSED ELEVATIONS TO BLACK.
X			CP-ST-02	PAVING & GRADING PLAN	COMPLETE SHEET UPDATE. CHANGED PRINT STYLE OF PROPOSED ELEVATIONS TO BLACK.
X			CP-ST-03	PAVING & GRADING PLAN	COMPLETE SHEET UPDATE. ADDED SURVEY INFORMATION. PLOT COLOR CHANGED FOR SWALES. PROVIDED NEW EDGE OF PAVEMENT LIMITS.
X			CP-ST-04	PAVING & GRADING PLAN	COMPLETE SHEET UPDATE. PLOT COLOR CHANGED FOR SWALES.
X			CP-ST-05	PAVING & GRADING PLAN	COMPLETE SHEET UPDATE. ADDED ELEVATIONS TO BOTTOM VIEWPORT. PLOT COLOR CHANGED FOR SWALES
X			CP-ST-06	PAVING & GRADING PLAN	COMPLETE SHEET UPDATE. PLOT COLOR CHANGED FOR SWALES.
X			CP-ST-07	PAVING & GRADING PLAN	COMPLETE SHEET UPDATE. PLOT COLOR CHANGED FOR SWALES.
X			CP-ST-08	PAVING & GRADING PLAN	COMPLETE SHEET UPDATE. PLOT COLOR CHANGED FOR SWALES.
X			CP-ST-09	PAVING & GRADING PLAN	COMPLETE SHEET UPDATE. PLOT COLOR CHANGED FOR SWALES.
X			CP-ST-10	PAVING & GRADING PLAN	COMPLETE SHEET UPDATE. PLOT COLOR CHANGED FOR SWALES.
X			CP-ST-11	PAVING & GRADING PLAN	COMPLETE SHEET UPDATE. PLOT COLOR CHANGED FOR SWALES.
X			CP-ST-12	PAVING & GRADING PLAN	COMPLETE SHEET UPDATE. PLOT COLOR CHANGED FOR SWALES.
X			CP-ST-13	PAVING & GRADING PLAN	COMPLETE SHEET UPDATE. PLOT COLOR CHANGED FOR SWALES.
X			CP-ST-14	PAVING & GRADING PLAN	COMPLETE SHEET UPDATE. PLOT COLOR CHANGED FOR SWALES.
X			CP-ST-15	PAVING & GRADING PLAN	COMPLETE SHEET UPDATE. PLOT COLOR CHANGED FOR SWALES.
X			CP-ST-16	PAVING & GRADING PLAN	COMPLETE SHEET UPDATE. PLOT COLOR CHANGED FOR SWALES.
X			CP-ST-17	PAVING & GRADING PLAN	COMPLETE SHEET UPDATE. ADDED LABEL TO STURCTURES IN TOP VIEWPORT. PLOT COLOR CHANGED FOR SWALES.
X			CP-ST-18	PAVING & GRADING PLAN	COMPLETE SHEET UPDATE. REMOVED STROMWATER FORCE MAIN CONNECTING TO BOX CULVERT & UPDATED PAVEMENT RESTORATION HATCHING. PLOT COLOR CHANGED FOR SWALES
X			CP-ST-19	PAVING & GRADING PLAN	COMPLETE SHEET UPDATE. REMOVED STROMWATER FORCE MAIN CONNECTING TO BOX CULVERT & UPDATED PAVEMENT RESTORATION HATCHING. REMOVED CONFLICT STRUTURE (S477) & MODIFIED CONFLICT STRUCTURE (S422) TO BE A 12'X6' CONFLICT STRUCTURE. PLOT COLOR CHANGED FOR SWALES.
X			CP-ST-20	PAVING & GRADING PLAN	COMPLETE SHEET UPDATE. PLOT COLOR CHANGE FOR SWALES.
X			CP-ST-21	PAVING & GRADING PLAN	COMPLETE SHEET UPDATE. PLOT COLOR CHANGE FOR SWALES.
X			CP-ST-22	PAVING & GRADING PLAN	COMPLETE SHEET UPDATE. ADDED SURVEY INFORMATION TO BOTTOM VIEWPORT. PLOT COLOR CHANGED FOR SWALES.
X			CP-ST-23	PAVING & GRADING PLAN	COMPLETE SHEET UPDATE. ADDED SURVEY INFORMATION TO BOTTOM VIEWPORT. PLOT COLOR CHANGED FOR SWALES.
X			CP-ST-24	PAVING & GRADING PLAN	COMPLETE SHEET UPDATE. PLOT COLOR CHANGE FOR SWALES.
X			CP-ST-25	PAVING & GRADING PLAN	COMPLETE SHEET UPDATE. ADDED PROPOSED ELEVATIONS TO ROAD RECONSTRUCTION ON TOP VIEWPORT. PLOT COLOR CHANGED FOR SWALES.
X			CP-ST-26	PAVING & GRADING PLAN	COMPLETE SHEET UPDATE. MODIFIED STORM INFRASTRUCTURE ON BOTTOM VIEWPORT. PLOT COLOR CHANGED FOR SWALES.
X			CP-ST-27	PAVING & GRADING PLAN	COMPLETE SHEET UPDATE. ADDED SURVEY INFORMATION ON BOTTOM VIEWPORT. PLOT COLOR CHANGED FOR SWALES.
X			CP-ST-28	PAVING & GRADING PLAN	COMPLETE SHEET UPDATE. PLOT COLOR CHANGE FOR SWALES.
X			CP-ST-29	PAVING & GRADING PLAN	COMPLETE SHEET UPDATE. PLOT COLOR CHANGE FOR SWALES.
X			CP-ST-30	PAVING & GRADING PLAN	COMPLETE SHEET UPDATE. PLOT COLOR CHANGE FOR SWALES.
X			CP-ST-31	PAVING & GRADING PLAN	COMPLETE SHEET UPDATE. ADDED AND MODIFIED SWALES & LABELED ACCESS ROAD. PLOT COLOR CHANGED FOR SWALES. PLOT COLOR CHANGED FOR STORM PIPING IN BOTTOM VIEWPORT.
X			CP-ST-32	PAVING & GRADING PLAN	COMPLETE SHEET UPDATE. MODIFIED SWALES & LABELED ACCESS ROAD. PLOT COLOR CHANGED FOR SWALES.
X			CP-ST-37	PAVING & GRADING PLAN	COMPLETE SHEET UPDATE. MODIFIED SWALES & LABELED ACCESS ROAD. PLOT COLOR CHANGED FOR SWALES.
X			CP-ST-40	PAVING & GRADING PLAN	COMPLETE SHEET UPDATE. ADDED SURVEY INFORMATION. PROVIDED ADDITIONAL PROPOSED ELEVATIONS TO ROAD RECONSTRUCTION AREAS.
X			CP-ST-41	PAVING & GRADING PLAN	COMPLETE SHEET UPDATE. PROVIDED ADDITIONAL PROPOSED ELEVATIONS TO ROAD RECONSTRUCTION AREAS.
X			CP-ST-42	PAVING & GRADING PLAN	COMPLETE SHEET UPDATE. ADDED SURVEY INFORMATION TO BOTH VIEWPORTS.
X			CP-ST-44	PAVING & GRADING PLAN	COMPLETE SHEET UPDATE. ADDITIONAL SURVEY INFORMATION ON BOTTOM VIEWPORT & MATCHLINE TO CP-ST-49. PROVIDED ADDITIONAL PROPOSED ELEVATIONS TO NEW ROAD CONSTRUCTION AREAS.
X			CP-ST-45	PAVING & GRADING PLAN	COMPLETE SHEET UPDATE. ADDITIONAL SURVEY INFORMATION ON BOTTOM VIEWPORT & MATCHLINE TO CP-ST-49. PROVIDED ADDITIONAL PROPOSED ELEVATIONS TO NEW ROAD CONSTRUCTION AREAS.
X			CP-ST-49	PAVING & GRADING PLAN	COMPLETE SHEET UPDATE. REMOVED UNNECESSARY GRAVEL HATCH FROM SWALE AND DRIVEWAYS SOUTH OF SW 17TH AVE. CREATED ADDITIONAL VIEWPORT FOR SW 17TH AVE. PROVIDED ADDITIONAL PROPOSED ELEVATIONS TO NEW ROAD CONSTRUCTION AREAS.
		X	CU-SU-KY-01	STORMWATER FORCE MAIN SITE PLAN KEY MAP	SHEET REMOVED FROM SET.
X			CU-SU-01	STORMWATER FORCE MAIN PLAN & PROFILE	COMPLETE SHEET UPDATE. SHORTENED STORMWATER FM DESIGN AND PROVIDED ALL FM INFRASTRUCTURE ON ONE SHEET. SHEET NUMBER WAS CHANGED FROM CU-SU-04 TO CU-SU-01.
		X	CU-SU-02	STORMWATER FORCE MAIN PLAN AND PROFILE	SHEET REMOVED FROM SET.
		X	CU-SU-03	STORMWATER FORCE MAIN PLAN AND PROFILE	SHEET REMOVED FROM SET.
		X	CU-SU-04	STORMWATER FORCE MAIN PLAN AND PROFILE	SHEET REMOVED FROM SET.
X			CU-3C-01	PUMP STATION KEY MAP	COMPLETE SHEET UPDATE. UPDATED SHEET NAME TO INCLUDE CU IN PREFIX. ADDITIONAL SURVEY INFORMATION PROVIDED. LABELED STRUCTURE S494.
X			CU-3C-02	PUMP STATION EXISTING SITE PLAN AND DEMOLITION PLAN	COMPLETE SHEET UPDATE. UPDATED SHEET NAME TO INCLUDE CU IN PREFIX.ADDITIONAL SURVEY INFORMATION PROVIDED. HATCHING WAS REVISED TO SEPARATE CLEARING AND GRUBBING AREA FROM STAGING AREA.
X			CU-3C-03	PUMP STATION PROPOSED SITE PLAN	COMPLETE SHEET UPDATE. UPDATED SHEET NAME TO INCLUDE CU IN PREFIX. ADDITIONAL SURVEY INFORMATION PROVIDED. LABELED NEW 15'X5' CONFLICT STRUCTURE (S496) AND OTHER STRUCTURE NUMBERS FOR PLAN CONSISTENCY.
X			CU-3C-04	PUMP STATION PROPOSED PLAN	COMPLETE SHEET UPDATE. UPDATED SHEET NAME TO INCLUDE CU IN PREFIX. ORIENTATION OF PIPING AND PUMP DETAILS WERE REVISED PER COORDINATION WITH PUMP MANUFACTURER.
	X		CU-3C-05	PUMP STATION PROPOSED ELECTRIC UTILITY WIRING	NEW SHEET ADDED TO SET.
	X		CU-3C-06	PUMP STATION PROPOSED ELECTRICAL SERVICE PLAN	NEW SHEET ADDED TO SET.
X			CZ-DT-12	CITY STANDARD DETAILS UTILITY SEPARATION AND CROSSING	UPDATED NOTE TO INCLUDE SHEET NUMBERS WHERE DETAIL APPLIES.
X			CZ-DT-18	CITY STANDARD DETAILS PAVING AND GRADING - SHEET 5	ADDED DETAIL FOR SANITARY SEWER LATERAL CROSSINGS FOR OPTION C.
	X		CZ-DT-20A	WATER QUALITY CONTROL STRUCTURE DETAILS	NEW SHEET ADDED TO SET. SHEET ADDED TO PROVIDE DETAILS FOR WATER QUALITY STRUCTURE S491.
X			CZ-DT-21	BOX CULVERT, HEADWALL & GUARDRAIL DETAILS	COMPLETE SHEET UPDATE. ADDED SURVEY INFORMATION TO VIEWPORT. ADDED FDOT INDEX NUMBER FOR BARRIER WALL, UPDATED STRUCTURAL DESIGN REQUIREMENTS FOR CONTRACTOR, UPDATED TYPICAL REVETMENT SECTION DETAIL & ADDED HATCH FOR LIMITS OF REVETMENT INSTALLATION.
X			CZ-DT-22	SWALE AND TYPICAL MILL & OVERLAY DETAILS	6" SWALE PROFILE REVISED TO SHOW 4" COMPACTED SUBGRADE.

ENGINEER: PATRICK J. GIBNEY
REG. No: 49428
DATE: 01/22/2021
TEL: 954-987-0066
FAX: 954-987-2949

DRAWN BY: XXX
DATE: 01/07/2019
DESIGNED BY: XXX
SCALE: N.T.S.
CHECKED BY: XXX
FIELD BOOK: XXXX

CITY OF FORT LAUDERDALE
PUBLIC WORKS DEPARTMENT
ENGINEERING & ARCHITECTURE
100 North Andrews Avenue, Fort Lauderdale, Florida 33301

REVISIONS

NO.	DATE	BY	CHK'D	DESCRIPTION

Patrick J. Gibney, State of Florida, Professional Engineer, License No. 49428 This item has been electronically signed and sealed by Patrick J. Gibney on the date indicated here using an SHA authentication code. Printed copies of this document are not considered signed and sealed and the SHA authentication code must be verified on any electronic copies.
8/26/2021

CONSTRUCTION SET

PROJECT # 11868
STORMWATER IMPROVEMENTS
RIVER OAKS NEIGHBORHOOD
ADDENDUM #5 REVISION SUMMARY

SHEET NO.
GG-GN-01A
TOTAL: 255
CAD FILE: 11868-GG-GN02
DRAWING FILE NO. 4-142-42

ADDENDUM #6 REVISION SUMMARY

COMPLETE SHEET UPDATE	NEW SHEET	REMOVE SHEET	SHEET NUMBER	SHEET NAME	DESCRIPTION OF CHANGE
	X		GG-GN-01B	ADDENDUM #6 REVISION SUMMARY	NEW SHEET. OUTLINE OF REVISIONS & A DESCRIPTION OF ALL CHANGES ISSUED WITH ADDENDUM #6..
X			GG-GN-02	LIST OF DRAWINGS	COMPLETE SHEET UPDATE. 255 TOTAL SHEETS IN BID SET & 19 SHEETS IDENTIFIED WITH A REVISION BLOCK NUMBER 2 FOR ADDED, REVISED, REMOVED OR REISSUED UNDER ADDENDUM #6 DATED 4/26/21.
X			CU-SS-01	SUMMARY OF STORMWATER STRUCTURES	COMPLETE SHEET UPDATE. REVISED STRUCTURE TABLES.
X			CU-SS-02	SUMMARY OF STORMWATER STRUCTURES	COMPLETE SHEET UPDATE. REVISED STRUCTURE TABLES.
X			CU-SP-01	SUMMARY OF STORMWATER PIPES	COMPLETE SHEET UPDATE. REVISED PIPE TABLES.
X			CU-SP-02	SUMMARY OF STORMWATER PIPES	COMPLETE SHEET UPDATE. REVISED PIPE TABLES.
X			CU-ST-31B	STORM DRAINAGE PLAN & PROFILE	COMPLETE SHEET UPDATE. PROVIDED DIMENSIONS FOR DIVERSION BYPASS VAULT INCLUDED WITH S378 (PLAN NOW SHOWS INNER DIMENSION OF VAULT AT 9'X14'), PROVIDED ADDITIONAL SHEET PILING FOR INSTALLATION ADJACENT TO EMBANKMENT, REVISIONS MADE IN PLAN & PROFILE.
X			CU-ST-32A	STORM DRAINAGE PLAN & PROFILE	COMPLETE SHEET UPDATE. REMOVED STRUCTURE #S74 AND SHIFTED PIPING AWAY FROM EXISTING GAZEBO IN PRESERVE PARK. ADDED ADDITIONAL SHEET PILING FOR INSTALLATION UNDER EXISTING BOARDWALK. ADDED NOTES FOR REQUIREMENTS OF CONTRACTOR FOR PIPE INSTALLATION UNDER BOARDWALK & REQUIRED MODIFICATIONS TO BOARDWALK. PROVIDED NEW ALIGNMENT FOR PROPOSED 6" DIP WATER WAIN & REMOVED PROPOSED 6" WATER MAIN CROSSING & UPDATED PROFILE.
X			CU-ST-37A	STORM DRAINAGE PLAN & PROFILE	COMPLETE SHEET UPDATE. PROVIDED ADDITIONAL SHEET PILING FOR INSTALLATION ADJACENT TO EMBANKMENT.
X			CU-ST-38A	STORM DRAINAGE PLAN & PROFILE	COMPLETE SHEET UPDATE. REMOVED STRUCTURE #S74 AND SHIFTED PIPING AWAY FROM EXISTING GAZEBO IN PRESERVE PARK. ADDED ADDITIONAL SHEET PILING FOR INSTALLATION UNDER EXISTING BOARDWALK. ADDED NOTES FOR REQUIREMENTS OF CONTRACTOR FOR PIPE INSTALLATION UNDER BOARDWALK & REQUIRED MODIFICATIONS TO BOARDWALK. UPDATED PROPOSED 6" WATER MAIN CROSSING & UPDATED PROFILE.
X			CU-ST-38B	STORM DRAINAGE PLAN & PROFILE	COMPLETE SHEET UPDATE. SHIFTED PIPING AWAY FROM EXISTING GAZEBO IN PRESERVE PARK. ADDED ADDITIONAL SHEET PILING FOR INSTALLATION UNDER EXISTING BOARDWALK. ADDED NOTES FOR REQUIREMENTS OF CONTRACTOR FOR PIPE INSTALLATION UNDER BOARDWALK & REQUIRED MODIFICATIONS TO BOARDWALK. UPDATED PROPOSED 6" WATER MAIN ALIGNMENT & REMOVED CROSSING IN PLAN & PROFILE.
X			CU-ST-39A	STORM DRAINAGE PLAN & PROFILE	COMPLETE SHEET UPDATE. REVISED PLAN TO SHOW SLIGHT SHIFT TO 66" RCP ALIGNMENT & REVISED DIMENSIONS.
X			CU-ST-39B	STORM DRAINAGE PLAN & PROFILE	COMPLETE SHEET UPDATE. REVISED PLAN TO SHOW SLIGHT SHIFT TO 66" RCP ALIGNMENT & REVISED DIMENSIONS.
X			CU-UR-08	UTILITY RELOCATION PLAN	COMPLETE SHEET UPDATE. REVISED PLAN TO SHOW REVISED 6" DIP WATER MAIN ALIGNMENT & CONNECTION DETAILS.
X			CU-3C-03	PUMP STATION PROPOSED SITE PLAN	COMPLETE SHEET UPDATE. REVISED PLAN TO SHOW UPDATE TO ELECTRICAL PANEL INFORMATION, GRAVEL AREA, BOLLARD LOCATION, WATER QUALITY STRUCTURE ORIENTATION,
X			CZ-DT-13	WATER QUALITY CONTROL STRUCTURE DETAILS	REVISED SHEET TO REMOVE DETAIL ROAD 039 FROM & REVISE DETAIL GREN 012 TO INCLUDE A 24" MINIMUM STORAGE LAYER.
X			CZ-DT-18	WATER QUALITY CONTROL STRUCTURE DETAILS	REVISED SHEET TO PROVIDE DRIVEWAY PAVER DETAIL & HEADER CURB DETAIL.
X			CZ-DT-19	WATER QUALITY CONTROL STRUCTURE DETAILS	PROVIDED DIMENSIONS FOR DIVERSION BYPASS VAULT INCLUDED WITH S378 (STRUCTURE NOW SHOWS INNER DIMENSIONS OF 9'X14')
X			C-03	WATER MAIN EXTENSION PLAN	REVISED SHEET TO PROVIDE UPDATED PROPOSED 6" DIP WATER MAIN ALIGNMENT & CONNECTION DETAILS, ELIMINATED CROSSING WITH PROPOSED 66" RCP.

Hazen

HAZEN AND SAWYER
4000 HOLLYWOOD BLVD, SUITE 750N
HOLLYWOOD, FLORIDA 33021
Certificate of Authorization No: 2771

CRAVEN • THOMPSON AND ASSOCIATES, INC.
ENGINEERS • PLANNERS • SURVEYORS
3563 N.W. 53RD STREET, FORT LAUDERDALE, FLORIDA 33309
FAX: (954) 739-6409 TEL.: (954) 739-6400
FLORIDA LICENSED ENGINEERING, SURVEYING & MAPPING BUSINESS No. 271
FLORIDA LICENSED LANDSCAPE ARCHITECTURE BUSINESS No. C000114

MATERIAL SHOWN HEREON IS THE PROPERTY OF CRAVEN•THOMPSON & ASSOCIATES, INC. AND SHALL NOT BE REPRODUCED IN WHOLE OR IN PART WITHOUT PERMISSION OF CRAVEN THOMPSON & ASSOCIATES, INC. WRITING CRAVEN • THOMPSON & ASSOCIATES, INC. COPYRIGHT © 2017

ENGINEER: PATRICK J. GIBNEY
REG. No: 49428
DATE: 01/22/2021
TEL: 954-987-0066
FAX: 954-987-2949

DRAWN BY: XXX
DATE: 01/07/2019
DESIGNED BY: XXX
SCALE: N.T.S.
CHECKED BY: XXX
FIELD BOOK: XXXX

CITY OF FORT LAUDERDALE
PUBLIC WORKS DEPARTMENT
ENGINEERING & ARCHITECTURE
100 North Andrews Avenue, Fort Lauderdale, Florida 33301

REVISIONS

NO.	DATE	BY	CHK'D	DESCRIPTION

Patrick J. Gibney, State of Florida, Professional Engineer, License No. 49428 This item has been electronically signed and sealed by Patrick J. Gibney on the date indicated here using an SHA authentication code. Printed copies of this document are not considered signed and sealed and the SHA authentication code must be verified on any electronic copies.
8/26/2021

CONSTRUCTION SET

PROJECT # 11868
STORMWATER IMPROVEMENTS
RIVER OAKS NEIGHBORHOOD
ADDENDUM #6 REVISION
SUMMARY

SHEET NO.
GG-GN-01B
TOTAL: 255
CAD FILE: 11868-GG-GN02
DRAWING FILE NO. 4-142-42

LIST OF DRAWINGS

CIVIL – GENERAL

SHEET NO.	SHEET TITLE
GG-GN-01	TITLE SHEET AND LOCATION MAP
GG-GN-01A	ADDENDUM #5 REVISION SUMMARY
GG-GN-01B	ADDENDUM #6 REVISION SUMMARY
GG-GN-02	LIST OF DRAWINGS
GG-GN-03	ABBREVIATIONS
GG-GN-04	SYMBOLS
GG-GN-05	GENERAL NOTES
GG-GN-06	SOIL BORING LOCATION MAP
GG-GN-07	CONTAMINATED SITES LOCATION SITE PLAN & KEY MAP
GG-GN-08	CONTAMINATED SITES LOCATION SITE PLAN
GG-GN-09	CONTAMINATED SITES LOCATION SITE PLAN
GG-GN-10	CONTAMINATED SITES LOCATION SITE PLAN
GG-GN-11	CONTAMINATED SITES LOCATION SITE PLAN

CIVIL – EXISTING SITE & DEMOLITION

SHEET NO.	SHEET TITLE
CX-KY-01	EXISTING CONDITIONS & DEMOLTION PLAN SITE KEY MAP
CX-ST-01	EXISTING CONDITIONS & DEMOLITION PLAN
CX-ST-02	EXISTING CONDITIONS & DEMOLITION PLAN
CX-ST-03	EXISTING CONDITIONS & DEMOLITION PLAN
CX-ST-04	EXISTING CONDITIONS & DEMOLITION PLAN
CX-ST-05	EXISTING CONDITIONS & DEMOLITION PLAN
CX-ST-06	EXISTING CONDITIONS & DEMOLITION PLAN
CX-ST-07	EXISTING CONDITIONS & DEMOLITION PLAN
CX-ST-08	EXISTING CONDITIONS & DEMOLITION PLAN
CX-ST-09	EXISTING CONDITIONS & DEMOLITION PLAN
CX-ST-10	EXISTING CONDITIONS & DEMOLITION PLAN
CX-ST-11	EXISTING CONDITIONS & DEMOLITION PLAN
CX-ST-12	EXISTING CONDITIONS & DEMOLITION PLAN
CX-ST-13	EXISTING CONDITIONS & DEMOLITION PLAN
CX-ST-14	EXISTING CONDITIONS & DEMOLITION PLAN
CX-ST-15	EXISTING CONDITIONS & DEMOLITION PLAN
CX-ST-16	EXISTING CONDITIONS & DEMOLITION PLAN
CX-ST-17	EXISTING CONDITIONS & DEMOLITION PLAN
CX-ST-18	EXISTING CONDITIONS & DEMOLITION PLAN
CX-ST-19	EXISTING CONDITIONS & DEMOLITION PLAN
CX-ST-20	EXISTING CONDITIONS & DEMOLITION PLAN
CX-ST-21	EXISTING CONDITIONS & DEMOLITION PLAN
CX-ST-22	EXISTING CONDITIONS & DEMOLITION PLAN
CX-ST-23	EXISTING CONDITIONS & DEMOLITION PLAN
CX-ST-24	EXISTING CONDITIONS & DEMOLITION PLAN
CX-ST-25	EXISTING CONDITIONS & DEMOLITION PLAN
CX-ST-26	EXISTING CONDITIONS & DEMOLITION PLAN
CX-ST-27	EXISTING CONDITIONS & DEMOLITION PLAN
CX-ST-28	EXISTING CONDITIONS & DEMOLITION PLAN
CX-ST-29	EXISTING CONDITIONS & DEMOLITION PLAN
CX-ST-30	EXISTING CONDITIONS & DEMOLITION PLAN
CX-ST-31	EXISTING CONDITIONS & DEMOLITION PLAN
CX-ST-32	EXISTING CONDITIONS & DEMOLITION PLAN
CX-ST-33	EXISTING CONDITIONS & DEMOLITION PLAN
CX-ST-34	EXISTING CONDITIONS & DEMOLITION PLAN
CX-ST-35	EXISTING CONDITIONS & DEMOLITION PLAN
CX-ST-36	EXISTING CONDITIONS & DEMOLITION PLAN
CX-ST-37	EXISTING CONDITIONS & DEMOLITION PLAN
CX-ST-38	EXISTING CONDITIONS & DEMOLITION PLAN
CX-ST-39	EXISTING CONDITIONS & DEMOLITION PLAN
CX-ST-40	EXISTING CONDITIONS & DEMOLITION PLAN
CX-ST-41	EXISTING CONDITIONS & DEMOLITION PLAN
CX-ST-42	EXISTING CONDITIONS & DEMOLITION PLAN
CX-ST-43	EXISTING CONDITIONS & DEMOLITION PLAN
CX-ST-44	EXISTING CONDITIONS & DEMOLITION PLAN
CX-ST-45	EXISTING CONDITIONS & DEMOLITION PLAN
CX-ST-46	EXISTING CONDITIONS & DEMOLITION PLAN
CX-ST-47	EXISTING CONDITIONS & DEMOLITION PLAN
CX-ST-48	EXISTING CONDITIONS & DEMOLITION PLAN
CX-ST-49	EXISTING CONDITIONS & DEMOLITION PLAN
CX-ST-50	EXISTING CONDITIONS & DEMOLITION PLAN
CX-ST-51	EXISTING CONDITIONS & DEMOLITION PLAN
CX-ST-52	EXISTING CONDITIONS & DEMOLITION PLAN
CX-ST-53	EXISTING CONDITIONS & DEMOLITION PLAN
CX-ST-54	EXISTING CONDITIONS & DEMOLITION PLAN

CIVIL – STORM DRAINAGE

SHEET NO.	SHEET TITLE
CU-KY-01	STORM DRAINAGE PLAN SITE KEY MAP
CU-CV-01	CHECK VALVE & PIPE LINING OVERALL PLAN
CU-SS-01	SUMMARY OF STORMWATER STRUCTURES
CU-SS-02	SUMMARY OF STORMWATER STRUCTURES
CU-SP-01	SUMMARY OF STORMWATER PIPES
CU-SP-02	SUMMARY OF STORMWATER PIPES
CU-ST-01A	STORM DRAINAGE PLAN & PROFILE
CU-ST-01B	STORM DRAINAGE PLAN & PROFILE
CU-ST-02A	STORM DRAINAGE PLAN & PROFILE
CU-ST-02B	STORM DRAINAGE PLAN & PROFILE
CU-ST-16B	STORM DRAINAGE PLAN & PROFILE
CU-ST-16C	STORM DRAINAGE PLAN & PROFILE
CU-ST-17A	STORM DRAINAGE PLAN & PROFILE
CU-ST-17B	STORM DRAINAGE PLAN & PROFILE
CU-ST-17C	STORM DRAINAGE PLAN & PROFILE
CU-ST-18A	STORM DRAINAGE PLAN & PROFILE
CU-ST-18B	STORM DRAINAGE PLAN & PROFILE
CU-ST-18C	STORM DRAINAGE PLAN & PROFILE
CU-ST-19A	STORM DRAINAGE PLAN & PROFILE
CU-ST-19B	STORM DRAINAGE PLAN & PROFILE
CU-ST-20A	STORM DRAINAGE PLAN & PROFILE
CU-ST-21B	STORM DRAINAGE PLAN & PROFILE
CU-ST-22A	STORM DRAINAGE PLAN & PROFILE
CU-ST-24A	STORM DRAINAGE PLAN & PROFILE
CU-ST-24B	STORM DRAINAGE PLAN & PROFILE
CU-ST-24C	STORM DRAINAGE PLAN & PROFILE
CU-ST-25A	STORM DRAINAGE PLAN & PROFILE
CU-ST-25C	STORM DRAINAGE PLAN & PROFILE
CU-ST-26A	STORM DRAINAGE PLAN & PROFILE
CU-ST-26B	STORM DRAINAGE PLAN & PROFILE
CU-ST-29B	STORM DRAINAGE PLAN & PROFILE
CU-ST-29C	STORM DRAINAGE PLAN & PROFILE
CU-ST-30A	STORM DRAINAGE PLAN & PROFILE
CU-ST-30B	STORM DRAINAGE PLAN & PROFILE
CU-ST-31A	STORM DRAINAGE PLAN & PROFILE
CU-ST-31B	STORM DRAINAGE PLAN & PROFILE
CU-ST-32A	STORM DRAINAGE PLAN & PROFILE
CU-ST-32B	STORM DRAINAGE PLAN & PROFILE
CU-ST-32C	STORM DRAINAGE PLAN & PROFILE
CU-ST-33A	STORM DRAINAGE PLAN & PROFILE
CU-ST-33B	STORM DRAINAGE PLAN & PROFILE
CU-ST-33C	STORM DRAINAGE PLAN & PROFILE
CU-ST-34A	STORM DRAINAGE PLAN & PROFILE
CU-ST-34B	STORM DRAINAGE PLAN & PROFILE
CU-ST-34C	STORM DRAINAGE PLAN & PROFILE
CU-ST-35A	STORM DRAINAGE PLAN & PROFILE
CU-ST-35B	STORM DRAINAGE PLAN & PROFILE
CU-ST-35C	STORM DRAINAGE PLAN & PROFILE
CU-ST-36A	STORM DRAINAGE PLAN & PROFILE
CU-ST-36B	STORM DRAINAGE PLAN & PROFILE
CU-ST-36C	STORM DRAINAGE PLAN & PROFILE
CU-ST-37A	STORM DRAINAGE PLAN & PROFILE
CU-ST-38A	STORM DRAINAGE PLAN & PROFILE
CU-ST-38B	STORM DRAINAGE PLAN & PROFILE
CU-ST-38C	STORM DRAINAGE PLAN & PROFILE
CU-ST-39A	STORM DRAINAGE PLAN & PROFILE
CU-ST-39B	STORM DRAINAGE PLAN & PROFILE
CU-ST-40A	STORM DRAINAGE PLAN & PROFILE
CU-ST-40B	STORM DRAINAGE PLAN & PROFILE
CU-ST-41A	STORM DRAINAGE PLAN & PROFILE
CU-ST-42A	STORM DRAINAGE PLAN & PROFILE
CU-ST-42B	STORM DRAINAGE PLAN & PROFILE
CU-ST-42C	STORM DRAINAGE PLAN & PROFILE
CU-ST-43A	STORM DRAINAGE PLAN & PROFILE
CU-ST-43B	STORM DRAINAGE PLAN & PROFILE
CU-ST-43C	STORM DRAINAGE PLAN & PROFILE
CU-ST-44A	STORM DRAINAGE PLAN & PROFILE
CU-ST-44B	STORM DRAINAGE PLAN & PROFILE
CU-ST-45A	STORM DRAINAGE PLAN & PROFILE
CU-ST-45B	STORM DRAINAGE PLAN & PROFILE
CU-ST-45C	STORM DRAINAGE PLAN & PROFILE

CIVIL – STORM DRAINAGE (CONTINUED)

SHEET NO.	SHEET TITLE
CU-ST-46A	STORM DRAINAGE PLAN & PROFILE
CU-ST-46B	STORM DRAINAGE PLAN & PROFILE
CU-ST-46C	STORM DRAINAGE PLAN & PROFILE
CU-ST-47A	STORM DRAINAGE PLAN & PROFILE
CU-ST-48A	STORM DRAINAGE PLAN & PROFILE
CU-ST-49B	STORM DRAINAGE PLAN & PROFILE
CU-ST-50A	STORM DRAINAGE PLAN & PROFILE
CU-ST-50B	STORM DRAINAGE PLAN & PROFILE
CU-ST-51A	STORM DRAINAGE PLAN & PROFILE
CU-ST-51B	STORM DRAINAGE PLAN & PROFILE
CU-ST-51C	STORM DRAINAGE PLAN & PROFILE
CU-ST-52A	STORM DRAINAGE PLAN & PROFILE
CU-ST-52C	STORM DRAINAGE PLAN & PROFILE
CU-ST-53A	STORM DRAINAGE PLAN & PROFILE
CU-ST-53B	STORM DRAINAGE PLAN & PROFILE

CIVIL – PAVING & GRADING

SHEET NO.	SHEET TITLE
CP-KY-01	PAVING & GRADING SITE KEY MAP
CP-KY-02	PAVING & GRADING OVERALL PLAN
CP-ST-01	PAVING & GRADING PLAN
CP-ST-02	PAVING & GRADING PLAN
CP-ST-03	PAVING & GRADING PLAN
CP-ST-04	PAVING & GRADING PLAN
CP-ST-05	PAVING & GRADING PLAN
CP-ST-06	PAVING & GRADING PLAN
CP-ST-07	PAVING & GRADING PLAN
CP-ST-08	PAVING & GRADING PLAN
CP-ST-09	PAVING & GRADING PLAN
CP-ST-10	PAVING & GRADING PLAN
CP-ST-11	PAVING & GRADING PLAN
CP-ST-12	PAVING & GRADING PLAN
CP-ST-13	PAVING & GRADING PLAN
CP-ST-14	PAVING & GRADING PLAN
CP-ST-15	PAVING & GRADING PLAN
CP-ST-16	PAVING & GRADING PLAN
CP-ST-17	PAVING & GRADING PLAN
CP-ST-18	PAVING & GRADING PLAN
CP-ST-19	PAVING & GRADING PLAN
CP-ST-20	PAVING & GRADING PLAN
CP-ST-21	PAVING & GRADING PLAN
CP-ST-22	PAVING & GRADING PLAN
CP-ST-23	PAVING & GRADING PLAN
CP-ST-24	PAVING & GRADING PLAN
CP-ST-25	PAVING & GRADING PLAN
CP-ST-26	PAVING & GRADING PLAN
CP-ST-27	PAVING & GRADING PLAN
CP-ST-28	PAVING & GRADING PLAN
CP-ST-29	PAVING & GRADING PLAN
CP-ST-30	PAVING & GRADING PLAN
CP-ST-31	PAVING & GRADING PLAN
CP-ST-32	PAVING & GRADING PLAN
CP-ST-33	PAVING & GRADING PLAN
CP-ST-34	PAVING & GRADING PLAN
CP-ST-35	PAVING & GRADING PLAN
CP-ST-36	PAVING & GRADING PLAN
CP-ST-37	PAVING & GRADING PLAN
CP-ST-38	PAVING & GRADING PLAN
CP-ST-39	PAVING & GRADING PLAN
CP-ST-40	PAVING & GRADING PLAN
CP-ST-41	PAVING & GRADING PLAN
CP-ST-42	PAVING & GRADING PLAN
CP-ST-43	PAVING & GRADING PLAN
CP-ST-44	PAVING & GRADING PLAN
CP-ST-45	PAVING & GRADING PLAN
CP-ST-46	PAVING & GRADING PLAN
CP-ST-47	PAVING & GRADING PLAN
CP-ST-48	PAVING & GRADING PLAN
CP-ST-49	PAVING & GRADING PLAN
CP-ST-50	PAVING & GRADING PLAN
CP-ST-51	PAVING & GRADING PLAN
CP-ST-52	PAVING & GRADING PLAN
CP-ST-53	PAVING & GRADING PLAN
CP-ST-54	PAVING & GRADING PLAN

CIVIL – UTILITY RELOCATION

SHEET NO.	SHEET TITLE
CU-UR-KY-01	UTILITY RELOCATION SITE KEY MAP
CU-UR-01	UTILITY RELOCATION PLAN
CU-UR-02	UTILITY RELOCATION PLAN
CU-UR-03	UTILITY RELOCATION PLAN
CU-UR-04	UTILITY RELOCATION PLAN
CU-UR-05	UTILITY RELOCATION PLAN
CU-UR-06	UTILITY RELOCATION PLAN
CU-UR-07	UTILITY RELOCATION PLAN
CU-UR-08	UTILITY RELOCATION PLAN
CU-UR-09	UTILITY RELOCATION PLAN

CIVIL – STORMWATER FORCE MAIN

SHEET NO.	SHEET TITLE
CU-SU-01	STORMWATER FORCE MAIN PLAN & PROFILE

CIVIL – PUMP STATION

SHEET NO.	SHEET TITLE
CU-3C-01	PUMP STATION KEY MAP
CU-3C-02	PUMP STATION EXISTING SITE AND DEMOLITION PLAN
CU-3C-03	PUMP STATION PROPOSED SITE PLAN
CU-3C-04	PUMP STATION PROPOSED PLAN
CU-3C-05	PUMP STATION PROPOSED ELECTRIC UTILITY WIRING
CU-3C-06	PUMP STATION PROPOSED ELECTRICAL SERVICE PLAN

CIVIL – DETAILS

SHEET NO.	SHEET TITLE
CZ-DT-01	CITY STANDARD DETAILS DEMOLITION NOTES – SHEET 1
CZ-DT-02	CITY STANDARD DETAILS DEMOLITION NOTES – SHEET 2
CZ-DT-03	CITY STANDARD DETAILS GENERAL NOTES
CZ-DT-04	CITY STANDARD DETAILS EROSION CONTROL – SHEET 1
CZ-DT-05	CITY STANDARD DETAILS EROSION CONTROL – SHEET 2
CZ-DT-06	CITY STANDARD DETAILS EROSION CONTROL – SHEET 3
CZ-DT-07	CITY STANDARD DETAILS STORM DRAINAGE – SHEET 1
CZ-DT-08	CITY STANDARD DETAILS STORM DRAINAGE – SHEET 2
CZ-DT-09	CITY STANDARD DETAILS STORM DRAINAGE – SHEET 3
CZ-DT-10	CITY STANDARD DETAILS STORM DRAINAGE – SHEET 3
CZ-DT-11	CITY STANDARD DETAILS UTILITY SEPARATION AND CROSSING
CZ-DT-12	CITY STANDARD DETAILS PAVING AND GRADING – SHEET 1
CZ-DT-13	CITY STANDARD DETAILS PAVING AND GRADING – SHEET 2
CZ-DT-14	CITY STANDARD DETAILS PAVING AND GRADING – SHEET 3
CZ-DT-15	CITY STANDARD DETAILS PAVING AND GRADING – SHEET 4
CZ-DT-16	CITY STANDARD DETAILS PAVING AND GRADING – SHEET 5
CZ-DT-17	CITY STANDARD DETAILS PAVING AND GRADING – SHEET 6
CZ-DT-18	CITY STANDARD DETAILS PAVING AND GRADING – SHEET 7
CZ-DT-19	WATER QUALITY CONTROL STRUCTURE DETAILS
CZ-DT-20	WATER QUALITY CONTROL STRUCTURE DETAILS
CZ-DT-20A	WATER QUALITY CONTROL STRUCTURE DETAILS
CZ-DT-21	BOX CULVERT, HEADWALL & GUARDRAIL DETAILS
CZ-DT-22	SWALE AND TYPICAL MILL & OVERLAY DETAILS

CIVIL – WATER MAIN EXTENSION PLAN

SHEET NO.	SHEET TITLE
C-01	COVER SHEET
C-02	GENERAL NOTES
C-03	WATER MAIN EXTENSION PLAN
C-04	WATER DETAILS AND NOTES
C-05	WATER DETAILS AND NOTES

ENGINEER: PATRICK J. GIBNEY
REG. No: 49428
DATE: 01/22/2021
TEL: 954-987-0066
FAX: 954-987-2949

DRAWN BY: XXX
DATE: 01/07/2019
DESIGNED BY: XXX
SCALE: N.T.S.
CHECKED BY: XXX
FIELD BOOK: XXXX

CITY OF FORT LAUDERDALE
PUBLIC WORKS DEPARTMENT
ENGINEERING & ARCHITECTURE
100 North Andrews Avenue, Fort Lauderdale, Florida 33301

Patrick J. Gibney, State of Florida, Professional Engineer, License No. 49428. This item has been electronically signed and sealed by Patrick J. Gibney on the date indicated here using an SHA authentication code. Printed copies of this document are not considered signed and sealed and the SHA authentication code must be verified on any electronic copies.
8/26/2021

REVISIONS

NO.	DATE	BY	CHK'D	DESCRIPTION

Hazen

HAZEN AND SAWYER
4000 HOLLYWOOD BLVD, SUITE 750N
HOLLYWOOD, FLORIDA 33021
Certificate of Authorization No: 2771

CRAVEN • THOMPSON AND ASSOCIATES, INC.
ENGINEERS • PLANNERS • SURVEYORS
3563 N.W. 53RD STREET, FORT LAUDERDALE, FLORIDA 33309
FAX: (954) 739-6409 TEL.: (954) 739-6400
FLORIDA LICENSED ENGINEERING, SURVEYING & MAPPING BUSINESS No. 271
FLORIDA LICENSED LANDSCAPE ARCHITECTURE BUSINESS No. C000114

MATERIAL SHOWN HEREON IS THE PROPERTY OF CRAVEN•THOMPSON & ASSOCIATES, INC. AND SHALL NOT BE REPRODUCED IN WHOLE OR IN PART WITHOUT PERMISSION OF CRAVEN•THOMPSON & ASSOCIATES, INC. WRITING CRAVEN • THOMPSON & ASSOCIATES, INC. COPYRIGHT © 2017

CONSTRUCTION SET

PROJECT # 11868
STORMWATER IMPROVEMENTS
RIVER OAKS NEIGHBORHOOD
LIST OF DRAWINGS

SHEET NO.
GG-GN-02
TOTAL: 255
CAD FILE: 11868-GG-GN02
DRAWING FILE NO. 4-142-42

ABBREVIATIONS

VALVE AND FITTING ABBREVIATIONS:

ARV	AIR RELIEF VALVE
BF	BLIND FLANGE
BFV	BUTTERFLY VALVE
BV	BALL VALVE
CO	CLEAN OUT
CPLG	COUPLING
CV	CHECK VALVE
DV	DIAPHRAGM VALVE
EXP JT	EXPANSION JOINT
FCO	FLOOR CLEAN OUT
FD	FLOOR DRAIN
FH	FIRE HYDRANT
FLG	FLANGE
FS	FLOOR SINK
GV	GATE VALVE
HB	HOSE BIBB
HD	HUB DRAIN
ICV	IRRIGATION CONTROL VALVE
LR	LONG RADIUS
MJ	MECHANICAL JOINT
NPT	NATIONAL PIPE THREAD
PE	PLAIN END
PV	PLUG VALVE
PRV	PRESSURE RELIEF VALVE
RED	REDUCER
SOV	SOLENOID OPERATED VALVE
THD	THREADED
VAC	VACUUM

PIPING:

CIP	CAST IRON PIPE
CMP	CORRUGATED METAL PIPE
CU	COPPER OR CUBIC
DIP	DUCTILE IRON PIPE
GIP	GALVANIZED PIPE
GSP	GALVANIZED STEEL PIPE
HDPE	HIGH DENSITY POLYETHYLENE PIPE
IP	IRON PIPE
PCCP	PRECAST CONCRETE CYLINDER PIPE
PVC	POLYVINYLCHLORIDE
RCP	REINFORCED CONCRETE PIPE
SCP	SECONDARY CONTAINMENT PIPE
SS	STAINLESS STEEL PIPE

GENERAL

A	ARC DISTANCE
AB	ANCHOR BOLT
A/C	AIR CONDITIONER
ACU	AIR CONDENSATE UNIT
AL, ALUM	ALUMINUM
∝	ANGLE
APPROX	APPROXIMATE
ARCH	ARCHITECTURAL
BLDG	BUILDING
BLK	BLOCK
BM	BENCHMARK
BOTT	BOTTOM
BOW	BACK OF WALK
BP	BID PACKAGE
CA	CENTRAL ANGLE
CB	CATCH BASIN
CC	CENTER TO CENTER
CHK'D	CHECKERED
C.I.	CURB INLET
CJ	CONSTRUCTION JOINT
CL, ℄	CENTER LINE
CLF	CHAIN LINK FENCE
CLR	CLEAR
COL	COLUMN
CO	COMPANY
CONC, C	CONCRETE
CONST	CONSTRUCTION
CONT	CONTINUOUS
CONTR	CONTRACTOR
CP	CONCRETE POST
DET	DETAIL
DIA	DIAMETER
DIAG	DIAGONAL
DIM	DIMENSION
DISDIR	DIRECTION
CH	DISCHARGE
DMH	DRAIN MANHOLE
DN	DOWN
DR	DRAIN
DWL	DOWEL
DWG	DRAWING
EA	EACH
ECC	ECCENTRIC
EE	EACH END
EF	EACH FACE
EL, ELEV	ELEVATION
ELEC	ELECTRIC
ENGR	ENGINEER
EOP	EDGE OF PAVEMENT
EW	EACH WAY
EQUIP	EQUIPMENT

GENERAL CONT.

ES	ELECTRICAL SERVICE
ESC	EROSION AND SEDIMENT CONTROL
EXH	EXHAUST
EXIST	EXISTING
EXP	EXPANSION
EXT	EXTERIOR
FDOT	FLORIDA DEPARTMENT OF TRANSPORTATION
FDR	FLOOR DRAIN
FE	FIRE EXTINGUISHER
FF	FINISH FLOOR
FG	FINISH GRADE
FIN	FINISH
FL	FLOOR
FM	FORCE MAIN
FND	FOUND
FP	FLAG POLE
FT	FOOT OR FEET
FTG	FOOTING OR FITTING
GALV	GALVANIZED
GPM	GALLONS PER MINUTE
GR	GRADE
H	HIGH
HORIZ	HORIZONTAL
HP	HIGH POINT
HS	HIGH SERVICE
HWL	HIGH WATER LEVEL
ID	INSIDE DIAMETER
IE	INVERT ELEVATION
IF	INSIDE FACE
IN	INCH
INFL	INFLUENT
INJ	INJECTION
INSUL	INSULATION
INT	INTERIOR
INV	INVERT
IP	IRON PIPE
IRRIG	IRRIGATION
IR	IRON ROD
ISO	ISOLATION
JCT	JUNCTION
JT	JOINT
LBS/FT	POUNDS PER FOOT
LG	LONG
LN	LINE
LP	LOW POINT OR LIGHT POLE
LR	LONG RADIUS
LWL	LOW WATER LEVEL
MANUF	MANUFACTURER
MAX	MAXIMUM
MECH	MECHANICAL
MGD	MILLION GALLONS PER DAY

GENERAL CONT.

MH	MANHOLE
MIN	MINIMUM
MO	MASONRY OPENING
MOV	MOTOR OPERATED VALVE
NAVD	NORTH AMERICAN VERTICAL DATUM
NGVD	NATIONAL GEODETIC VERTICAL DATUM
NIC	NOT IN CONTRACT
NO	NUMBER
NTS	NOT TO SCALE
OC	ON CENTER
OD	OUTSIDE DIAMETER
OHW	OVERHEAD WIRES
OPNG	OPENING
P/L	PROPERTY LINE
PRB	POLLUTION RETARDANT BAFFLE
PS	PUMP STATION
PT	PRESSURE TREATED
R	RIM
RAD, R	RADIUS
RECIR	RECIRCULATION
RE	RIM ELEVATION
REHAB	REHABILITATION
REINF	REINFORCING
REQ'D	REQUIRED
R/W,	ROW RIGHT OF WAY
SECT	SECTION
SHT	SHEET
SLB	SIGNAL LIGHT BOX
SMH	STORMWATER MANHOLE
SPEC	SPECIFICATION
SQ	SQUARE
SS	STAINLESS STEEL
STIN	STORM INLET
STMH	STORM MANHOLE
STL	STEEL
STRUC	STRUCTURAL
SYMM	SYMMETRICAL
TBD	TO BE DETERMINED
TEMP	TEMPORARY
THK	THICK
TI	TEMPERATURE INDICATOR
TO	THROUGHOUT
TOB	TOP OF BANK
TOC	TOP OF CONCRETE
TOE	TOE OF SLOPE
TOP	TOP OF PIPE
TOS	TOP OF SLAB
TYP	TYPICAL
UGE	UNDERGROUND ELECTRIC
UNK	UNKNOWN

GENERAL CONT.

V	VENT
VERT	VERTICAL
VP	VENT PIPE
VTR	VENT THROUGH ROOF
W	WIDE
W/	WITH
WATR	WATER
WGR	WOOD GUARDRAIL
W/L	WATER LEVEL
W/O	WITH OUT
WWF	WELDED WIRE FABRIC
WUP	WOOD UTILITY POLE

FLOWSTREAM IDENTIFICATION:

ED	EQUIPMENT DRAIN
FM	FORCE MAIN
FR	FUEL RETURN
FS	FUEL SUPPLY
OF	OVERFLOW
PW	POTABLE WATER
RD	ROOF DRAIN
SA	SAMPLE
SAN	SANITARY SEWER
SPD	SUMP PUMP DISCHARGE
STRM	STORMWATER
WM	WATER MAIN

Hazen

HAZEN AND SAWYER
4000 HOLLYWOOD BLVD, SUITE 750N
HOLLYWOOD, FLORIDA 33021

Certificate of Authorization No: 2771

CRAVEN • THOMPSON AND ASSOCIATES, INC.
ENGINEERS • PLANNERS • SURVEYORS
3563 N.W. 53RD STREET, FORT LAUDERDALE, FLORIDA 33309
FAX: (954) 739-6409 TEL.: (954) 739-6400
FLORIDA LICENSED ENGINEERING, SURVEYING & MAPPING BUSINESS No. 271
FLORIDA LICENSED LANDSCAPE ARCHITECTURE BUSINESS No. C000114

MATERIAL SHOWN HEREON IS THE PROPERTY OF CRAVEN•THOMPSON & ASSOCIATES, INC. AND SHALL NOT BE REPRODUCED IN WHOLE OR IN PART WITHOUT PERMISSION OF CRAVEN•THOMPSON & ASSOCIATES, INC. WRITING CRAVEN • THOMPSON & ASSOCIATES, INC. COPYRIGHT © 2017

ENGINEER: PATRICK J. GIBNEY
REG. No: 49428
DATE: 1/22/2021
TEL: 954-739-6400
FAX: 954-739-6409

DRAWN BY: XXX	DATE: 01/07/2019
DESIGNED BY: XXX	SCALE: N.T.S.
CHECKED BY: XXX	
FIELD BOOK: XXXX	

CITY OF FORT LAUDERDALE
PUBLIC WORKS DEPARTMENT
ENGINEERING & ARCHITECTURE
100 North Andrews Avenue, Fort Lauderdale, Florida 33301

REVISIONS

NO.	DATE	BY	CHK'D	DESCRIPTION

Patrick J. Gibney, State of Florida, Professional Engineer, License No. 49428 This item has been electronically signed and sealed by Patrick J. Gibney on the date indicated here using an SHA authentication code. Printed copies of this document are not considered signed and sealed and the SHA authentication code must be verified on any electronic copies.
5/26/2021

CONSTRUCTION SET

PROJECT # 11868
STORMWATER IMPROVEMENTS
RIVER OAKS NEIGHBORHOOD
ABBREVIATIONS

SHEET NO.
GG-GN-03
TOTAL: 255
CAD FILE: 11868-GG-GN03
DRAWING FILE NO. 4-142-42

LINETYPES

COMMUNICATION, CABLE TV, TELEPHONE:

- COM(CT) — COMCAST LINES
- COM OH — COMMUNICATIONS
- COM(CC) — CROWN CASTLE LINES
- COM(FD) — FIBERNET DIRECT LINES
- COM(L3) — LEVEL 3 LINES
- GPS OH — GPG LINES
- UGT — UNDERGROUND TELEPHONE LINES
- OHT — OVERHEAD TELEPHONE LINES

ELECTRIC LINES:

- X-X ELEC — ELECTRIC DUCT (X-X = WIRES/GUAGE)
- UGE — UNDERGROUND ELECTRIC LINES
- OHE — OVERHEAD ELECTRIC LINES

OTHERS LINES:

- GAS — GAS MAIN (SIZE UNKNOWN)
- X" GAS — GAS MAIN (SIZE)
- AIR — UNDERGROUND AIR LINE
- FM — SANITARY FORCE MAIN (SIZE UNKNOWN)
- X" FM — SANITARY FORCE MAIN (SIZE)
- X" PVC FM — SANITARY FORCEMAIN (SIZE/MATERIAL)
- SAN — SANITARY GRAVITY (SIZE UNKNOWN)
- X" SAN — SANITARY GRAVITY MAIN (SIZE)
- X" PVC SAN — SANITARY GRAVITY (SIZE/MATERIAL)
- SD — STORM DRAINAGE (SIZE UNKNOWN)
- X" SD — STORM DRAINAGE (SIZE)
- X" PVC SD — STORM DRAINAGE (SIZE/MATERIAL)
- WM — WATER MAIN (SIZE UNKNOWN)
- X" WM — WATER MAIN (SIZE)
- X" DIP WM — WATER MAIN (SIZE/MATERIAL)
- OHW — OVER HEAD WIRES (TYPE UNKNOWN)
- UNK UG — UNDERGROUND LINE (TYPE UNKNOWN)
- ABANDONED
- DEMOLISHED
- EXISTING
- PROPOSED
- PROPOSED PIPELINE (DOUBLE LINE IF SCALE OF DRAWING PERMITS)
- PLASTIC FENCE
- WOODEN FENCE
- WROUGHT IRON FENCE
- CHAIN LINK FENCE
- BOARD FENCE
- PROPERTY / RIGHT-OF-WAY LINE
- CENTER LINE
- EASEMENT LINE

SYMBOLS, LEGEND AND HATCH PATTERNS

LANSCAPING SYMBOLS:

- PALM TREE
- SHADE TREE
- PINE TREE
- CACTUS
- HEDGE
- VEGETATION
- BUSH
- UNKNOWN TREE

LEGEND:

- A/C — AIR CONDITIONING UNIT
- AIR RELEASE VALVE
- AR — AIR VALVE MANHOLE
- ANCHOR
- BFP (NNN) — BACK FLOW PREVENTER
- BASKET BALL HOOP
- BBQ GRILL
- BLOW-OFF VALVE
- BOAT ANCHOR CLEAT
- BOLLARD
- BUILDING COLUMN/PILE
- CATV PEDESTAL
- CB — CATCH BASIN
- CATCH BASIN INLET
- CLEAN OUT
- COMMUNICATION MANHOLE
- COMMUNICATION VAULT
- CONCRETE LIGHT POLE
- CONCRETE POST
- CONCRETE POWER POLE
- 10.00 — CONTOUR LINE ELEVATION
- CROSS FITTING
- CURB INLET
- DECORATIVE/YARD LIGHT POLE
- DETECTOR CHECK VALVE
- DCCV — DOUBLE DETECTOR CHECK VALVE
- E — ELECTRIC BOX
- E — ELECTRIC MANHOLE
- ELECTRICAL METER
- ELECTRIC METER/SERVICE
- ELECTRICAL OUTLET
- ELECTRICAL PEDESTAL
- ELECTRICAL PULL BOX
- ELECTRICAL VAULT
- x 10.00 — EXISTING SPOT ELEVATION

LEGEND CONT:

- FIRE HYDRANT
- FIBER OPTIC PEDESTAL
- FLAG — FLAG POLE
- FM — FORCE MAIN VALVE
- FC — GAS FUEL CAP
- GAS MARKER
- GAS METER
- GAS — GAS VALVE
- GAS WELL
- GATE CONTROL BOX
- G — GREASE TRAP MH
- GUY ANCHOR AND WIRE
- HOSE BIBB
- IRR — IRRIGATION CONTROL VALVE
- LS — LIFT STATION
- LIFT STATION CAN
- LP — LIGHT POLE
- LP — LP GAS TANK
- MAILBOX
- MAIL DROP BOX — MAIL DROP BOX
- MANHOLE
- MARKER POST
- METAL LIGHT POLE
- MONITORING WELL
- OUTFALL
- PARK BENCH
- PEDESTRIAN SIGNAL
- PILE
- PIN FLAG
- PIPE MATERIAL CHANGE
- PARKING LIGHT 1 BULB
- PARKING LIGHT 1 BULB
- PARKING LIGHT 2 BULBS
- PARKING LIGHT 2 BULBS
- PARKING LIGHT 3 BULBS
- PARKING LIGHT 3 BULBS
- PARKING LIGHT 4 BULBS
- PARKING LIGHT 4 BULBS
- PARKING METER
- PARKING METER (DOUBLE)
- PLUG
- POST INDICATOR VALVE
- REDUCER
- ROOF DRAIN

LEGEND CONT:

- RAILROAD CROSSING GATE
- REDUCER FITTING
- CO — SANITARY CLEAN OUT
- S — SANITARY MANHOLE
- SANITARY WYE LATERAL
- SIAMESE VALVE
- SIGN
- SIGN DOUBLE POST
- SPOT-FLOOD LIGHT
- SPK — SPRINKLER HEAD
- B-1 — SOIL BORING
- SQUARE COLUMN
- STEEL I-BEAM
- CO — STORM CLEAN OUT
- D — STORM MANHOLE
- STORM DRAINAGE VAULT
- TEE FITTING
- TELEPHONE BOOTH — TELEPHONE BOOTH
- TELEPHONE JUNCTION BOX
- T — TELEPHONE MANHOLE
- PAY PHONE — TELEPHONE ON PEDESTAL
- TELEPHONE PEDESTAL
- TELEPHONE PULL BOX
- TELEPHONE VAULT
- TE-1 — TEST EXCAVATION LOCATION
- TEST HOLES
- TOWER — TOWER
- TRAFFIC CAMERA
- TRAFFIC CONTROL
- TRAFFIC POLE
- TRAFFIC PULL BOX
- TSB — TRAFFIC SIGNAL BOX
- TSP — TRAFFIC SIGNAL POLE
- TRANS — TRANSFORMER PAD
- TRASH CAN
- TRASH CAN
- MH — UNKNOWN MANHOLE
- VALLEY CURB INLET
- VALVE BOX
- VALVE PIPE
- W — WATER MANHOLE
- WATER METER
- WATER METER
- WATER METER (DOUBLE)
- WATER PUMP

LEGEND CONT.

- WV — WATER VALVE
- WATER VAULT
- WATER WELL
- WOOD POST
- WOOD LIGHT POLE
- WOOD TELEPHONE POLE
- WOOD POWER POLE
- YD — YARD DRAIN

CONTROL LEGEND:

- AT — AERIAL TARGET
- BM — BENCH MARK
- DRILL HOLE
- HUB & TACK
- IP — IRON PIPE
- IR — IRON ROD
- NAIL&TAB
- PERMANENT REFERENCE MONUMENT
- PERMANENT REFERENCE MONUMENT NAIL&TAB
- PKNAIL.SPIKE
- QUARTER SECTION CORNER
- SECTION CORNER
- x X.X — EXISTING SPOT ELEVATION
- x X.X — PROPOSED SPOT ELEVATION

HATCH LEGEND:

- ROADWAY RECONSTRUCTION
- PERMEABLE PAVEMENT
- GRASSY SWALE
- EXFILTRATION TRENCH
- POROUS PAVEMENT
- ASPHALT ACCESS ROAD
- CONCRETE
- GRAVEL
- MILL & RESURFACE
- ASPHALT DRIVEWAY RESTORATION
- UTILITY OPEN TRENCH PAVEMENT RESTORATION
- CONCRETE DRIVEWAY RESTORATION (ASPHALT)
- DRIVEWAY RESTORATION (BRICK PAVERS OR STAMPED CONCRETE)
- GRADING DIRECTION
- 10.00 — MATCH EXISTING GRADE
- 0.00 — PROPOSED SPOT ELEVATION

SECTION AND DETAIL IDENTIFICATION

SECTION IDENTIFICATION

A. SECTION CUT ON DRAWING CU-EE-01

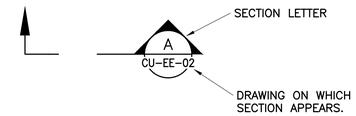

B. ON DRAWING CU-EE-02 THIS SECTION IS IDENTIFIED AS:

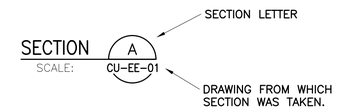

DETAIL IDENTIFICATION

A. NON STANDARD DETAIL CALL-OUT ON DRAWING:

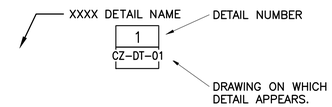

B. CITY STANDARD DETAIL CALL-OUT ON DRAWING:

XXXX DETAIL NAME
SEE CITY STANDARD
DETAIL STRM-XXXX

SHEET NUMBERING IDENTIFICATION

XY-ZZ-01 = (DISCIPLINE|SHEET TYPE-AREA-SEQUENTIAL NUMBER)

DISCIPLINE (X)	
LETTER DESIGNATION	DESCRIPTION
G	GENERAL
C	CIVIL
L	LANDSCPE
M	MECHANICAL
A	ARCHITECTURAL
S	STRUCTURAL
H	HVAC
P	PLUMBING
E	ELECTRICAL
I	INSTRUMENTATION

SHEET TYPE (Y)	
LETTER DESIGNATION	DESCRIPTION
D	PUMP STATION
E	EROSION CONTROL
G	LEGEND, NOTES, ETC.
I	IRRIGATION
P	PAVING/GRADING
U	UTILITIES, PIPES, ETC.
V	VEGETATION, PLANTING, ETC.
X	EXISTING SITE, DEMOLTION
Y	SCHEMATICS, SCHEDULES, ETC.
Z	DETAILS

AREA (ZZ)	
LETTER DESIGNATION	DESCRIPTION
GN	GENERAL
KY	KEY PLANS, MAPS
ST	SITE (CIVIL PLANS, PROFILES, ETC.)
SH	SCHEDULES
DT	DETAILS
EE	DURRS
EW	EDGEWOOD WEST

GENERAL NOTES:

(1) ELECTRICAL SYMBOLS SHOWN ON ELECTRICAL SHEETS.

(2) FOR WELDING SYMBOLS USE AMERICAN WELDING SOCIETY STANDARD SYMBOLS.

* DENOTES DIMENSIONS OR ELEVATIONS DEPENDENT ON EQUIPMENT SUPPLIED.

Hazen

HAZEN AND SAWYER
4000 HOLLYWOOD BLVD, SUITE 750N
HOLLYWOOD, FLORIDA 33021

Certificate of Authorization No: 2771

CRAVEN • THOMPSON AND ASSOCIATES, INC.
ENGINEERS • PLANNERS • SURVEYORS
3563 N.W. 53RD STREET, FORT LAUDERDALE, FLORIDA 33309
FAX: (954) 739-6409 TEL.: (954) 739-6400
FLORIDA LICENSED ENGINEERING, SURVEYING & MAPPING BUSINESS No. 271
FLORIDA LICENSED LANDSCAPE ARCHITECTURE BUSINESS No. C000114

MATERIAL SHOWN HEREON IS THE PROPERTY OF CRAVEN•THOMPSON & ASSOCIATES, INC. AND SHALL NOT BE REPRODUCED IN WHOLE OR IN PART WITHOUT PERMISSION OF CRAVEN•THOMPSON & ASSOCIATES, INC. WRITING CRAVEN • THOMPSON & ASSOCIATES, INC. COPYRIGHT © 2017

ENGINEER: PATRICK J. GIBNEY
REG. No: 49428
DATE: 01/22/2021
TEL: 954-739-6400
FAX: 954-739-6409

DATE: 01/07/2019
DRAWN BY: XXX
DESIGNED BY: XXX
SCALE: N.T.S.
CHECKED BY: XXX
FIELD BOOK: XXXX

CITY OF FORT LAUDERDALE
PUBLIC WORKS DEPARTMENT
ENGINEERING & ARCHITECTURE
100 North Andrews Avenue, Fort Lauderdale, Florida 33301

Patrick J. Gibney, State of Florida, Professional Engineer, License No. 49428 This item has been electronically signed and sealed by Patrick J. Gibney on the date indicated here using an SHA authentication code. Printed copies of this document are not considered signed and sealed and the SHA authentication code must be verified on any electronic copies.
8/26/2021

REVISIONS

NO.	DATE	BY	CHK'D	DESCRIPTION

CONSTRUCTION SET

PROJECT # 11868
STORMWATER IMPROVEMENTS
RIVER OAKS NEIGHBORHOOD
SYMBOLS

SHEET NO.
GG-GN-04

TOTAL: 255

CAD FILE: 11868-GG-GN04

DRAWING FILE NO. 4-142-42

CAM #22-0847
Exhibit 1A
Page 1424 of 1426

GENERAL NOTES:

1. CONTRACTOR SHALL MAINTAIN ACCESS TO PRIVATE PROPERTY AT ALL TIMES.
2. REFER TO SPECIFICATION SECTION 01001 AND 01520 FOR DETAILED REQUIREMENTS FOR SEQUENCE OF CONSTRUCTION AND CONSTRUCTION CONSTRAINTS.
3. SITE INFORMATION HAS BEEN PROVIDED BY SITE SURVEY PREPARED CRAVEN THOMPSON & ASSOCIATES, INC.
4. HORIZONTAL CONTROL IS REFERENCED TO THE FLORIDA STATE PLANE COORDINATE SYSTEM, EAST ZONE, BASED ON THE NORTH AMERICAN DATUM OF 1983 (NAD 83). VERTICAL CONTROL IS REFERENCED TO THE NORTH AMERICAN VERTICAL DATUM OF 1988 (NAVD 88).
5. RECORD DRAWINGS USED FOR EXISTING FEATURES: Stormwater atlas S165042, Project As-builts P-10419, P-10705B, P-10705C, P-10705F & P-10890. RECORD DRAWINGS MAY BE OBTAINED FROM THE OWNER UPON REQUEST.
6. CONTRACTOR SHALL VERIFY FIELD CONDITIONS BEFORE COMMENCEMENT OF ANY CONSTRUCTION ACTIVITIES. CONTRACTOR SHALL VERIFY EXISTING ELEVATIONS AND DIMENSIONS WHERE NEW WORK WILL MATCH EXISTING. DISCREPANCIES SHALL BE BROUGHT TO THE ATTENTION OF THE ENGINEER FOR RESOLUTION PRIOR TO THE COMMENCEMENT OF WORK.
7. CONTRACTOR SHALL OBTAIN ALL THE NECESSARY PERMITS FROM THE APPROPRIATE AUTHORITIES, DEPARTMENTS, AND/OR AGENCIES HAVING JURISDICTION PRIOR TO COMMENCING WORK.
8. ALL PRACTICAL AND NECESSARY EFFORTS SHALL BE TAKEN DURING CONSTRUCTION TO PREVENT UNNECESSARY TREE REMOVAL AND/OR DAMAGE.
9. THE LOCATION OF EXISTING UTILITIES HAS BEEN PREPARED FROM THE MOST RELIABLE INFORMATION AVAILABLE TO THE ENGINEER. THE INFORMATION IS NOT GUARANTEED. THEREFORE THE CONTRACTOR SHALL VERIFY THE LOCATION AND ELEVATION OF ALL UTILITIES IN THE FIELD PRIOR TO THE START OF ANY CONSTRUCTION ACTIVITIES.
10. UTILITIES HAVE BEEN PLOTTED FROM AVAILABLE SURVEY INFORMATION. IT IS THE CONTRACTOR'S RESPONSIBILITY TO VERIFY THEIR EXACT LOCATION AND TO AVOID DAMAGE TO THEM. THE CONTRACTOR SHALL CONTACT SUNSHINE 811 AT PHONE NUMBER 811 OR 1-800-432-4770 TO REQUEST UNDERGROUND UTILITY LOCATION MARK-OUT AT LEAST TWO (2) WORKING DAYS BUT NO MORE THAN TEN (10) WORKING DAYS PRIOR TO BEGINNING EXCAVATION, INCLUDING SOIL DRILLING. THE CONTRACTOR SHALL ALSO CONTACT AND REQUEST UTILITY LOCATION MARK-OUT FROM BURIED UTILITY OWNERS WITH UTILITIES ON THE PROJECT SITE THAT ARE NOT PARTICIPANTS OF SUNSHINE 811.
11. CONTRACTOR SHALL REPLACE SURROUNDING LAND COVER AFFECTED BY CONSTRUCTION ACTIVITIES, INCLUDING, BUT NOT LIMITED TO, PAVERS, SIDEWALK, SOD, AND LANDSCAPING, TO EXISTING OR BETTER CONDITIONS.
12. CONTRACTOR SHALL TAKE CARE TO AVOID DAMAGE TO EXISTING PAVEMENT, STRUCTURES, AND UTILITIES THAT ARE NOT INDICATED TO BE DEMOLISHED OR REMOVED. ANY DAMAGE TO EXISTING PAVEMENT, STRUCTURES, AND UTILITIES NOT INDICATED TO BE DEMOLISHED OR REMOVED SHALL BE REPAIRED AT THE CONTRACTOR'S EXPENSE.
13. WHERE PROPOSED WORK IS IN THE VICINITY OF UTILITY POLES, SUCH THAT SUPPORT OF THE POLE(S) WILL BE REQUIRED, THE CONTRACTOR SHALL BE RESPONSIBLE FOR NOTIFYING THE UTILITY OF THE WORK. IT WILL BE THE RESPONSIBILITY OF THE CONTRACTOR TO COORDINATE WITH THE UTILITY FOR SUPPORT OF THE POLE.
14. DURING EXCAVATION AND PLACEMENT OF UTILITIES THE CONTRACTOR SHALL COMPLY WITH ALL APPLICABLE SAFETY REGULATIONS AND SHALL SUBMIT TO THE ENGINEER FOR APPROVAL SHEET PILING, SHORING AND/OR BRACING DESIGNS AS MAY BE NECESSARY TO COMPLY WITH THESE REGULATIONS.
15. GROUNDWATER FROM ALL DEWATERING OPERATIONS SHALL BE DISCHARGED TO AN ENVIRONMENTALLY ACCEPTABLE LOCATION IN ACCORDANCE WITH THE CONTRACT DOCUMENTS, OR AS DIRECTED BY THE ENGINEER.
16. THE CONTRACTOR SHALL REMOVE AND DISPOSE OF ALL DEBRIS GENERATED DURING THE PROJECT OFF SITE AT A PROPERLY PERMITTED DISPOSAL FACILITY.
17. FOR REFERENCE MONUMENTS, SEE SURVEY DRAWING.
18. THE CONTRACTOR IS REQUIRED TO OBTAIN WRITTEN APPROVAL FROM THE ENGINEER FOR ANY DEVIATIONS FROM THE PLANS AND/OR SPECIFICATIONS.
19. THE UNDERGROUND CONTRACTOR SHALL MINIMIZE THE WORK AREA AND WIDTH OF TRENCHES TO AVOID DISTURBANCES OF NATURAL VEGETATION. SPOIL FROM TRENCHES SHALL BE PLACED ONLY ON PREVIOUSLY CLEARED AREAS, EXISTING RIGHT-OF-WAY OR APPROVED EASEMENT. THE CONTRACTOR SHALL NOT REMOVE OR DISTURB ANY TREES OR SHRUBS WITHOUT PRIOR APPROVAL FROM THE ENGINEER.
20. ALL RESTORATION SHALL CONFORM TO THE STANDARDS AND REQUIREMENTS OF THE AGENCIES HAVING JURISDICTION OVER THE RIGHT-OF-WAY WHERE THE PROJECT IS CONSTRUCTED.
21. ALL LOOP DETECTORS, COMMUNICATION CABLES AND CONDUITS, IF DAMAGED BY THE CONTRACTOR'S ACTIVITIES, SHALL BE REPAIRED AND/OR REPLACED IN ACCORDANCE WITH BCTED AND FDOT REQUIREMENTS.
22. PIPING, FITTINGS, AND APPURTENANCES FOR DUCTILE IRON PIPE SHALL BE RESTRAINED JOINT WHERE SHOWN ON THE PLANS OR AS OTHERWISE SPECIFICALLY SPECIFIED IN THE CONTRACT DRAWINGS.
23. RESILIENT SEATED GATE VALVES WITH BEVEL TYPE GEAR SHALL BE INSTALLED IN HORIZONTAL ORIENTATION WHEN LESS THAN 7-FEET OF COVER FROM TOP OF PIPE IS PRESENT OR AS OTHERWISE SPECIFICALLY SPECIFIED IN THE CONTRACT DRAWINGS.
24. NO CONNECTIONS FOR THE PURPOSE OF OBTAINING WATER SUPPLY DURING CONSTRUCTION SHALL BE MADE TO ANY FIRE HYDRANT OR BLOW-OFF STRUCTURE WITHOUT FIRST OBTAINING PERMISSION AND A CONSTRUCTION METER FROM THE CITY OF FORT LAUDERDALE.
25. THE CONTRACTOR WILL BE RESPONSIBLE FOR LOCATING, MOVING AND RELOCATING OR REPLACING ALL WATER SERVICES OR SEWER LATERALS WHICH ARE ENCOUNTERED DURING EXCAVATION. THE CONTRACTOR SHALL SUBMIT A WRITTEN PLAN FOR WATER SERVICE AND WASTEWATER SERVICE DISRUPTION FOR APPROVAL 7 (SEVEN) CALENDAR DAYS PRIOR TO THE ANTICIPATED DISRUPTION. THE CONTRACTOR SHALL NOTIFY THE PROPERTY OWNERS 48 HOURS IN ADVANCE OF ANY WORK ON THEIR SERVICES. THIS WORK SHALL BE CONSIDERED INCIDENTAL.
26. THE CONTRACTOR MUST INFORM THE CITY AT LEAST 48-HOURS IN ADVANCE OF CONSTRUCTION, IN WRITING IF ANY CONFLICT IS DISCOVERED DURING POT HOLE OPERATIONS FOR CLARIFICATION BY THE CITY.
27. IT WILL BE THE RESPONSIBILITY OF THE CONTRACTOR TO NOTIFY THE UTILITIES DEPARTMENT OF THE CITY OF FORT LAUDERDALE AT LEAST TWO (2) BUSINESS DAYS IN ADVANCE TO COORDINATE ANY ACTIVITY TO BE PERFORMED BY THE CITY'S UTILITIES DEPARTMENT.
28. CONTRACTOR SHALL NOT DISTURB AREAS OUTSIDE EXISTING RIGHTS-OF-WAY.
29. ALL WORK WITHIN STATE DEPARTMENT OF TRANSPORTATION (FDOT) RIGHT-OF-WAYS SHALL BE IN CONFORMANCE WITH FDOT SPECIFICATIONS AND PERMIT REQUIREMENTS.
30. ALL WORK WITHIN BROWARD COUNTY RIGHT-OF-WAYS SHALL BE IN CONFORMANCE WITH THE BROWARD COUNTY MINIMUM STANDARDS AND/OR REQUIREMENTS.
31. CONTRACTOR SHALL COMPLY WITH ALL LOCAL CITY, COUNTY AND STATE REGULATIONS PERTAINING TO THE CLOSING OF PUBLIC STREETS FOR USE OF TRAFFIC DURING CONSTRUCTION.
32. CONTRACTOR SHALL PREPARE AND SUBMIT MAINTENANCE OF TRAFFIC (MOT) PLANS TO FDOT, CITY OF FORT LAUDERDALE, BROWARD COUNTY AS REQUIRED FOR WORK TO BE DONE WITHIN THEIR R/W PRIOR TO COMMENCEMENT OF WORK. SPECIFIC AGENCY MOT REQUIREMENTS ARE THE SOLE RESPONSIBILITY OF THE CONTRACTOR.
33. STATIONS SHOWN ON THE DRAWINGS ARE BASED ON THE ESTABLISHED BASELINE AND SHALL NOT BE CONSIDERED AS DISTANCES OR AS A MEASURE OF THE LINEAR FOOTAGE OF PIPE TO BE INSTALLED.
34. THE GENERAL INTENT IS TO PROVIDE SEWER SERVICE LATERALS FOR EACH PROPERTY. ALL LATERAL LOCATIONS SHALL BE FIELD ADJUSTED.
35. ALL OPEN TRENCHES AND HOLES ADJACENT TO ROADWAY OR WALKWAY SHALL BE PROPERLY MARKED AND BARRICADED TO ASSURE THE SAFETY OF BOTH VEHICULAR AND PEDESTRIAN TRAFFIC.
36. TRENCHES OR HOLES NEAR WALKWAYS, IN ROADWAYS OR THEIR SHOULDERS SHALL NOT BE LEFT OPEN DURING NIGHT TIME HOURS WITHOUT ADEQUATE PROTECTION.
37. CONTRACTOR SHALL PROMPTLY REPAIR AND RESTORE EXISTING PAVEMENT, SIDEWALKS, CURBS, DRIVEWAYS, PIPES, RESIDENTIAL AND COMMERCIAL SPRINKLER LINES, CONDUIT, CABLES, ETC. AND LANDSCAPE AREAS DAMAGED AS A RESULT OF CONSTRUCTION ACTIVITIES.
38. CONTRACTOR SHALL PROVIDE TEMPORARY FENCING AS REQUIRED BY AGENCIES HAVING JURISDICTION OVER THE PROJECT AND/OR WHEN REQUIRED FOR PUBLIC SAFETY.
39. THE CONTRACTOR SHALL BE RESPONSIBLE AT ALL TIMES THROUGHOUT THE DURATION OF CONSTRUCTION AND UNTIL ACCEPTANCE OF WORK, FOR THE PROTECTION OF EXISTING AND NEWLY INSTALLED UTILITIES FROM DAMAGE OR DISRUPTION OF SERVICE. THE CONTRACTOR SHALL BE RESPONSIBLE FOR TAKING SUCH MEASURES AS NECESSARY TO PROTECT THE HEALTH, SAFETY AND WELFARE OF THOSE PERSONS HAVING ACCESS TO THE WORK SITE.
40. LOCATION OF AIR RELEASE VALVES MAY BE FIELD ADJUSTED BY THE ENGINEER OR CITY OF FORT LAUDERDALE AS NECESSARY.
41. CONTRACTOR SHALL ADJUST TO GRADE ALL EXISTING UTILITY CASTINGS INCLUDING VALVE BOXES, MANHOLES, HAND HOLES, PULL BOXES, INLETS AND SIMILAR STRUCTURES IN CONSTRUCTION AREA TO BE OVERLAYED WITH ASPHALT.
42. EXISTING TRAFFIC SIGNS SHALL BE RESET UPON COMPLETION PER BROWARD COUNTY TRAFFIC ENGINEERING STANDARDS. COST SHALL BE CONSIDERED INCIDENTAL. CONTRACTOR SHALL REPAIR OR REPLACE DAMAGED TRAFFIC SIGNAL LOOPS PER BROWARD COUNTY TRAFFIC ENGINEERING SPECIFICATIONS; COST SHALL BE INCIDENTAL.
43. CONTRACTOR SHALL RESTORE EXISTING PAVEMENT AND PAVEMENT MARKINGS/SIGNAGE TO ORIGINAL PRE-CONSTRUCTION CONDITION OR AS OTHERWISE SPECIFIED IN CONTRACT DOCUMENTS. THIS WORK SHALL BE CONSIDERED INCIDENTAL.
44. ALL CONSTRUCTION WITHIN FDOT R/W MUST CONFORM WITH FDOT SPECIFICATIONS, STANDARDS, AND PERMIT REQUIREMENTS. NO WORK SHALL COMMENCE WITHIN FDOT R/W's WITHOUT AN FDOT PERMIT. FULL LANE WIDTH RESTORATION TO MATCH EXISTING PAVEMENT SECTION IS REQUIRED IN ACCORDANCE WITH FDOT STANDARDS FOR PROPOSED WORK WITHIN FDOT R/W.

Hazen

HAZEN AND SAWYER
4000 HOLLYWOOD BLVD, SUITE 750N
HOLLYWOOD, FLORIDA 33021

Certificate of Authorization No: 2771

CRAVEN • THOMPSON AND ASSOCIATES, INC.
ENGINEERS • PLANNERS • SURVEYORS
3563 N.W. 53RD STREET, FORT LAUDERDALE, FLORIDA 33309
FAX: (954) 739-6409 TEL.: (954) 739-6400
FLORIDA LICENSED ENGINEERING, SURVEYING & MAPPING BUSINESS No. 271
FLORIDA LICENSED LANDSCAPE ARCHITECTURE BUSINESS No. C000114

MATERIAL SHOWN HEREON IS THE PROPERTY OF CRAVEN•THOMPSON & ASSOCIATES, INC. AND SHALL NOT BE REPRODUCED IN WHOLE OR IN PART WITHOUT PERMISSION OF CRAVEN•THOMPSON & ASSOCIATES, INC. WRITING CRAVEN • THOMPSON & ASSOCIATES, INC. COPYRIGHT © 2017

ELEVATIONS SHOWN HEREON ARE BASED ON THE NORTH AMERICAN VERTICAL DATUM 1988 (NAVD 1988)

811 KNOW WHAT'S BELOW ALWAYS CALL 811 BEFORE YOU DIG
It's fast. It's free. It's the law.
www.callsunshine.com

Patrick J. Gibney, State of Florida, Professional Engineer, License No. 49428 This item has been electronically signed and sealed by Patrick J. Gibney on the date indicated here using an SHA authentication code. Printed copies of this document are not considered signed and sealed and the SHA authentication code must be verified on any electronic copies.
8/26/2021

CONSTRUCTION SET

ENGINEER:
PATRICK J. GIBNEY
REG. No: 49428
DATE: 01/22/2021
TEL: 954-739-6400
FAX: 954-739-6409

DRAWN BY: XXX	DATE: 01/07/2019
DESIGNED BY: XXX	SCALE: N.T.S.
CHECKED BY: XXX	
FIELD BOOK: XXXX	

CITY OF FORT LAUDERDALE
PUBLIC WORKS DEPARTMENT
ENGINEERING & ARCHITECTURE
100 North Andrews Avenue, Fort Lauderdale, Florida 33301

REVISIONS

NO.	DATE	BY	CHK'D	DESCRIPTION

PROJECT # 11868
STORMWATER IMPROVEMENTS
RIVER OAKS NEIGHBORHOOD
GENERAL NOTES

SHEET NO.
GG-GN-05
TOTAL: 255
CAD FILE: 11868-GG-GN05
DRAWING FILE NO. 4-142-42

0 300' 600'

Hazen

HAZEN AND SAWYER
4000 HOLLYWOOD BLVD, SUITE 750N
HOLLYWOOD, FLORIDA 33021

Certificate of Authorization No: 2771

CRAVEN · THOMPSON AND ASSOCIATES, INC.
ENGINEERS · PLANNERS · SURVEYORS
3563 N.W. 53RD STREET, FORT LAUDERDALE, FLORIDA 33309
FAX: (954) 739-6409 TEL.: (954) 739-6400
FLORIDA LICENSED ENGINEERING, SURVEYING & MAPPING BUSINESS No. 271
FLORIDA LICENSED LANDSCAPE ARCHITECTURE BUSINESS No. C000114

MATERIAL SHOWN HEREON IS THE PROPERTY OF CRAVEN·THOMPSON & ASSOCIATES, INC. AND SHALL NOT BE REPRODUCED IN WHOLE OR IN PART WITHOUT PERMISSION OF CRAVEN·THOMPSON & ASSOCIATES, INC. WRITING CRAVEN · THOMPSON & ASSOCIATES, INC. COPYRIGHT © 2017

LEGEND:

SOIL BORING LOCATIONS

NOTES:

1. REFER TO CONTRACT SPECIFICATIONS FOR GEOTECHNICAL REPORT RELATED TO SOIL BORINGS.
2. SOIL BORINGS ARE APPROXIMATE, REFER TO GEOTECH REPORT FOR DETAILED LOCATION.

Patrick J. Gibney, State of Florida, Professional Engineer, License No. 49428 This item has been electronically signed and sealed by Patrick J. Gibney on the date indicated here using an SHA authentication code. Printed copies of this document are not considered signed and sealed and the SHA authentication code must be verified on any electronic copies.
8/26/2021

CONSTRUCTION SET

ENGINEER: PATRICK J. GIBNEY
REG. No: 49428
DATE: 02/01/2017
TEL: 954-987-0066
FAX: 954-987-2949

DRAWN BY: XXX	DATE: 01/07/2019
DESIGNED BY: XXX	SCALE: 1"=300'
CHECKED BY: XXX	
FIELD BOOK: XXXX	

CITY OF FORT LAUDERDALE
PUBLIC WORKS DEPARTMENT
ENGINEERING & ARCHITECTURE
100 North Andrews Avenue, Fort Lauderdale, Florida 33301

REVISIONS

NO.	DATE	BY	CHK'D	DESCRIPTION

PROJECT # 11868
STORMWATER IMPROVEMENTS
RIVER OAKS NEIGHBORHOOD
SOIL BORING LOCATION MAP

SHEET NO.
GG-GN-06
TOTAL: 255
CAD FILE: 11868-CG-KY01
DRAWING FILE NO. 4-142-42