APPLICATION FOR WAIVER OF LIMITATIONS FOR BOAT LIFT

Mr. Hank Hury and Dr. James Cross
209 Birch Road, Boat Slip #3
Fort Lauderdale, FL 33304

GUNSTER
FLORIDA'S LAW FIRM FOR BUSINESS

HURY AND CROSS

WAIVER OF LIMITATIONS FOR BOAT LIFT

INDEX OF DOCUMENTS

EXHIBIT 1

CITY OF FORT LAUDERDALE
MARINE FACILITIES
APPLICATION FOR WATERWAY PERMITS, WAIVERS AND LICENSES

Any agreement with the City of Fort Lauderdale and other parties, such as, but not limited to, licenses, permits and approvals involving municipal docking facilities or private uses in the waterways as regulated by Section 8 of the City Code of Ordinances or Section 47-19.3 of the City's Urban Land Development Regulations, shall be preceded by the execution and filing of the following application form available at the Office of the Supervisor of Marine Facilities. The completed application must be presented with the applicable processing fee paid before the agreement is prepared or the application processed for formal consideration (see City of Fort Lauderdale Code Section 2-157). If legal publication is necessary, the applicant agrees to pay the cost of such publication in addition to the application fee.

APPLICATION FORM
(Must be in Typewritten Form Only)

1. LEGAL NAME OF APPLICANT - (If corporation, name and titles of officers as well as exact name of corporation. If individuals doing business under a fictitious name, correct names of individuals, not fictitious names, must be used. If individuals owning the property as a private residence, the name of each individual as listed on the recorded warranty deed):

   NAME: James D. Cross and Hank Hury

   TELEPHONE NO: 954-703-0645 (home) _____ (business) FAX NO. _____

2. APPLICANT"S ADDRESS (if different than the site address): 209 N. Birch Road #1202, Fort Lauderdale, FL 33304

3. TYPE OF AGREEMENT AND DESCRIPTION OF REQUEST:
   Waiver of limitation for mooring devices

4. SITE ADDRESS: 209 N. Birch Road, Boatslip #3, Ft. Lauderdale, FL 33304 ZONING: IOA

   LEGAL DESCRIPTION: Unit 1202, Alhambra Place Condominium, according to the Declaration of Condominium thereof, dated July 19, 2001, recorded in OR Book 31973, Page 698 as amended, recorded in the Public Records of Broward County, Florida

5. EXHIBITS (In addition to proof of ownership, list all exhibits provided in support of the applications).

James D. Cross Hank Hury 3-11-13
Applicant's Signature Date

==========

The sum of $_____ was paid by the above-named applicant on the _____ of _____, 2013____ Received by:_____
City of Fort Lauderdale

==========For Official City Use Only==========

Marine Advisory Board Action
Formal Action taken on _____

Commission Action
Formal Action taken on _____

Recommendation_____
Action_____

GUNSTER
FLORIDA'S LAW FIRM FOR BUSINESS

Our File Number: 36247.00001
Writer's Direct Dial Number: 954.468.1358
Writer's E-Mail Address: dhall@gunster.com

March 21, 2013

Marine Advisory Board
City of Fort Lauderdale
2 South New River East
Fort Lauderdale, Florida 33301

Re: Project Summary – Waiver of Limitations for Boat Lift
ULDR Section 47-19.3(c), (d) and (e)
Mr. Hank Hury and Dr. James Cross
209 N. Birch Road, Boat Slip #3
Fort Lauderdale, Florida 33304

Dear Marine Advisory Board Members,

Mr. Hank Hury and Dr. James Cross (the "Applicants") request a waiver of limitations to install a new 4 post boat lift on a parcel of property located on the Intracoastal Waterway ("ICW") at 209 N. Birch Road (the "Property"). A 24 unit condominium known as Alhambra Place and two wood docks with four boat slips that extend 30 feet into the ICW have been constructed on the Property. The docks were permitted by DEP/ACOE and the City (City Permit #03051356). Additionally, there is a 2.5' wide bulkhead adjacent to the Property.

ULDR Section 47-19.3(c) requires a waiver if mooring structures will extend into the waterway greater than 25 feet from the property line. Applicant requests a waiver to allow the proposed boat lift to extend an additional 14.3 feet beyond the 25 foot limit of the ULDR. The proposed boat lift will be located 407.8 feet from the eastern edge of the navigable channel. The width of the waterway at this site is 725 feet.

The Applicants propose to install a 16' x 16' boat lift on the Applicants' deeded boat slip (boat slip #3), which will extend 36.8' from the bulkhead (39.3' from the Property line), and only 14.3' beyond the 25 feet permitted by Code. However, it will only extend 6.8' beyond the Property's existing wood docks.

In 2009 the City approved a boat lift for the owner of the adjacent boat slip – boat slip #4 (Permit #18031222). This boat lift was approved for a 48' boat and a lift which was rated at 65,000 lbs. This boat lift extends 48.1' into the Intracoastal Waterway. By contrast, the Applicants' request is for a boat lift for a 38' boat rated at 24,000 lbs, which will only extend 39.3' from the Property line (36.8' from the bulkhead) into the ICW. The Applicants' vessel is shorter, maintains a lower profile, and requires a less intrusive boat lift than the boat already

existing on the Property. Moreover, because the boat lift in boat slip #4 already extends 8.8' further into the ICW than the Applicants' proposed boat lift, there will be no adverse impact to navigation or safety along the ICW, nor will there be any blocked views or obstructions for the neighbors to the north and south of the Property. Again, this is one of the widest parts of the ICW, and the boat lift will be far enough away from the channel so as to not impose any navigational hazards or obstructions.

The Applicants request that the limitations be waived because:

(1) **The Property is not in a "no wake" zone**. Wakes from speeding boats down the ICW cause boats moored in the boat slips to rock excessively, increasing the likelihood of damage to the boats. The Applicants' work causes them to travel frequently and having their boat on a lift is more secure and protective, so that no damage occurs while they are away. Additionally, the lift will protect the vessel if a storm passes through the area and there is less chance of lines coming loose due to the large wakes. Additionally, there is a water taxi stop located one block to the north of the Property and water taxis constantly pass close to the boat slips at excessive speeds on their way to and from the Seville Street taxi stop. The large wakes are magnified because the Property is located along such a wide part of the ICW.

(2) **Trash Accumulation**. The location of the Property is at a bend in the ICW. Large amounts of trash accumulate in front of the bulkhead and around the boat slips. Additionally, a submerged sandbar located between the boat slips and the ICW channel causes the current to push the trash directly to the Property's bulkhead where it remains until the tide changes. Having a boat sit in this type of trash (leaves, plastic, styrofoam, petroleum sheen, etc.) is damaging to the hull and can clog water intakes. Recent photos showing this trash accumulation are included with this application.

The Applicants will comply with all applicable requirements of ULDR Section 47-19.3 for construction and installation, and respectfully request approval of Waiver of Limitations to install the boat lift.

Sincerely,

Donald R. Hall

DHR//mh
cc: Mr. Andrew Cuba
FTL_ACTIVE 4310510.3

THIS INSTRUMENT PREPARED BY/
RECORD AND RETURN TO:

J. WALTER McCRORY, ESQ.
J. Walter McCrory, P.A.
1512 E. Broward Boulevard
Suite 200
Fort Lauderdale, FL 33301

PROPERTY APPRAISER'S PARCEL
IDENTIFICATION NUMBER: 10201-AN-02000

WARRANTY DEED

THIS INDENTURE, made this 22 day of February 2005, by **ALHAMBRA JOINT VENTURE**, a Florida joint venture, hereafter "Grantor", whose post office address is 209 North Birch Road, Fort Lauderdale, Broward County, Florida 33304, to **JAMES D. CROSS** and **HANK HURY**, post office address 209 N Birch Rd, Ft Lauderdale FL 33304, hereafter "Grantees":

WITNESSETH that the Grantor, for and in consideration of Ten and 00/100 ($10.00) Dollars and other valuable considerations to Grantor in hand paid by Grantees, the receipt whereof is hereby acknowledged, has granted, bargained and sold to Grantees, and Grantees' heirs and assigns forever, the following described property, situate, lying and being in Broward County, Florida, to wit:

> Unit 1202, Alhambra Place Condominium, a Condominium, together with an undivided interest in the common elements, according to the Declaration of Condominium thereof, dated July 19, 2001, recorded on August 13, 2001, in O.R. Book 31973, Page 698, Public Records of Broward County, Florida; and Amendment dated August 14, 2001, recorded on August 15, 2001, O.R. Book 31985, Page 661; and Amendment dated September 24, 2001, recorded on October 3, 2001, O.R. Book 32190, Page 1166; and Amendment dated February 10, 2004, recorded on February 26, 2004, in O.R. Book 36967, Page 928; and Amendment dated December 11, 2004, recorded on January 7, 2005, in O.R. Book 38840, Page 25; and thereafter as the same may be amended, Public Records of Broward County, Florida.
>
> Consent of Board of Directors of Alhambra Place Condominium Association approving Grantees is attached hereto as "EXHIBIT A".

SUBJECT TO: (1) Zoning and/or restrictions and prohibitions imposed by governmental authority; (2) restrictions, easements and other matters appearing on the plat and/or common to the subdivision; (3) taxes for the year 2005 and all subsequent years.

AND the Grantor does hereby fully warrant the title to said property and will defend the same against the lawful claims of all persons whomsoever.

IN WITNESS WHEREOF, the Grantor has hereunto set his hand and seal the day and year first above written.

Signed, sealed and delivered in
the presence of:

Print Name: J. WALTER McCRORY

Print Name: Laura J. Lewis

ALHAMBRA JOINT VENTURE

By: STEELERVEST, INC., a Florida corporation, joint venturer

By: _____
Henry J. Langsenkamp, III
President

STATE OF FLORIDA
COUNTY OF BROWARD

The foregoing instrument was acknowledged before me this 22nd day of February 2005, by HENRY J. LANGSENKAMP, III, President, Steelervest, Inc., joint venturer, Alhambra Joint Venture, (V) who is personally known to me or (____) who has produced (personally known) as identification, and who did/did not take an oath.

NOTARY PUBLIC
State of Florida

MY COMMISSION EXPIRES:

Laura J. Lewis
MY COMMISSION # DD130585 EXPIRES
August 16, 2006
BONDED THRU TROY FAIN INSURANCE, INC.

C:\Legal Docs\Alhambra Joint Venture\Cross & Hury #1202\Warranty Deed.doc

ALHAMBRA PLACE

ASSIGNMENT OF BOATSLIP

ALHAMBRA JOINT VENTURE, a Florida joint venture, hereafter the "Assignor", does hereby assign unto **JAMES D. CROSS and HANK HURY**, hereafter the "Buyers", to the extent allowed by the permitting entity, the Assignor's license to use Boatslip #3, subject to the terms and conditions of that Declaration of Alhambra Place Condominium as recorded in O.R. Book 31973, Page 698, of the Public Records of Broward County, Florida, and as subsequently amended from time to time. This assignment includes the personal property comprising the Boatslip.

The Buyers have purchased adjacent real property and recognize that the above referenced Declaration establishes conditions and restrictions as to the maintenance, operation and transfer of the Boatslip. The Buyers are further advised that the dock is permitted but that the property underlying is a navigable waterway and is not owned in fee simple or leased by the Assignor and that the Assignor is conveying no interest in the real property beneath the dock. The Boatslip being assigned comprises one-half (1/2) of the dock and the remainder of the dock comprises another Boatslip.

IN WITNESS WHEREOF, the parties have caused these presents to be executed in their names on the 22 day of February 2005.

BUYERS:

James D. Cross

Hank Hury

ASSIGNOR:

ALHAMBRA JOINT VENTURE

By: _____
Henry J. Langsenkamp, III

ALHAMBRA PLACE CONDOMINIUM
209 NORTH BIRCH ROAD • FORT LAUDERDALE • FLORIDA 33304
954.764.2424 FAX 954.522.5292

Hank Hury and James D. Cross
209 North Birch Road, #1202
Fort Lauderdale, Florida 33304

March 11, 2013

Ms. Jonda K. Joseph
City Clerk
City of Fort Lauderdale
100 N. Andrews Avenue
Fort Lauderdale, FL 33301

Re: Letter of Consent for Property Located at 209 North Birch Road, Fort Lauderdale, Florida 33304

Dear Ms. Joseph:

Gunster, Yoakley & Stewart, P.A. (specifically Donald R. Hall and Heidi Davis Knapik) is authorized to submit applications, appear before the City's Boards and meet with City staff and elected officials on behalf of the undersigned property owners.

STATE OF FLORIDA)
SS.
COUNTY OF BROWARD)

The foregoing instrument was acknowledged before me this 11th of March, 2013,by Hank Hury. He is personally known to me or has produced _____ as identification.

Notary Public

HANK HURY

JOHN GREGORY PORTER
MY COMMISSION # EE856238
EXPIRES December 04, 2016
(407) 398-0153 FloridaNotaryService.com

STATE OF FLORIDA)
SS.
COUNTY OF BROWARD)

The foregoing instrument was acknowledged before me this 11th of March, 2013,by James D. Cross. He is personally known to me or has produced _____ as identification.

Notary Public

JAMES D. CROSS

JOHN GREGORY PORTER
MY COMMISSION # EE856238
EXPIRES December 04, 2016
(407) 398-0153 FloridaNotaryService.com

(6)

Alhambra Place Condominium Association, Inc.

March 8, 2013

RE: Unit 1202 Boat Lift Approval

To Whom It May Concern:

The Board of Directors of Alhambra Place Condominium Association, Inc. A Not-For-Profit Florida Corporation located at 209 N Birch Road Fort Lauderdale, Florida 33304 does here by approve Dr. James D. Cross, M.D. and Mr. Hank Hury of unit 1202 to install a 24,000 lb. boat lift in their slip.

On Behalf of the Board of Directors,

James R. Novick

James R. Novick

President

SKETCH OF SURVEY

BOUNDARY SURVEY & SITE PLAN (PROPOSED FACILITIES)

LEGAL DESCRIPTION

The south one-half (S 1/2) of lot 5 and all of lots 6, 7, and 8, Block 10, LAUDER DEL MAR, Plat Book 2, page 30, Fort Lauderdale, Broward County, Florida

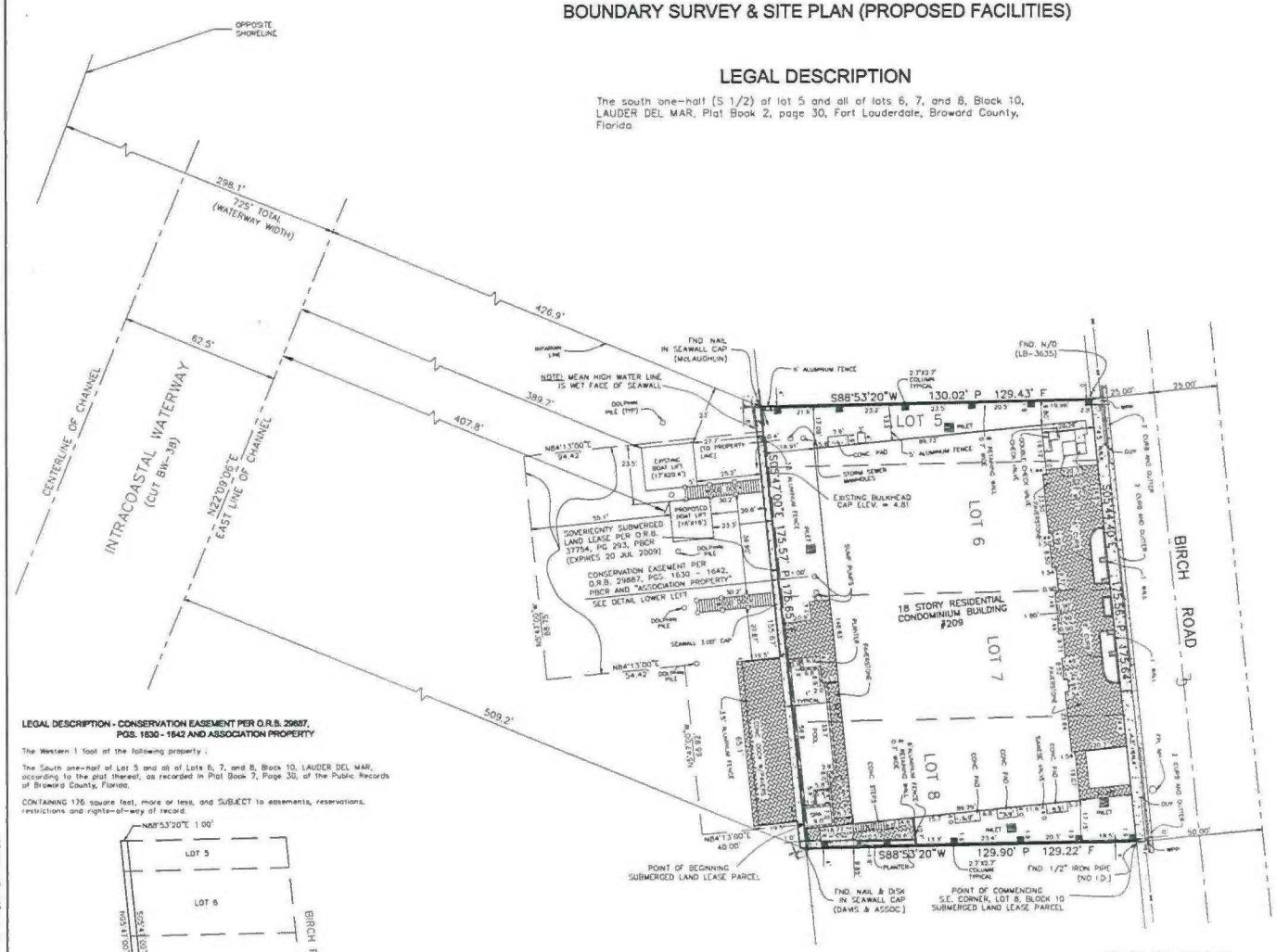

LEGAL DESCRIPTION - CONSERVATION EASEMENT PER O.R.B. 29887, PGS. 1630 - 1642 AND ASSOCIATION PROPERTY

The Western 1 foot of the following property :

The South one-half of Lot 5 and all of Lots 6, 7, and 8, Block 10, LAUDER DEL MAR, according to the plat thereof, as recorded in Plat Book 2, Page 30, of the Public Records of Broward County, Florida.

CONTAINING 176 square feet, more or less, and SUBJECT to easements, reservations, restrictions and rights-of-way of record.

DETAIL - CONSERVATION EASEMENT PER O.R.B. 29887, PGS. 1630 - 1642 AND "ASSOCIATION PROPERTY"
NOT TO SCALE

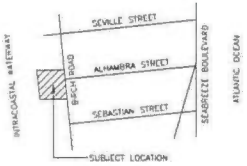

LOCATION MAP
N.T.S.

20 0 20 40 60
GRAPHIC SCALE IN FEET
SCALE: 1" = 20'

SECTION 1, TOWNSHIP 50 SOUTH, RANGE 42 EAST

LEGEND

FND	= Found	℄	= Centerline
IR	= Iron Rod	WF	= Wood Fence
IP	= Iron Pipe	CLF	= Chain Link Fence
PC	= Plastic Cap	PL	= Planter
N/C	= Nail and Cap	WP	= Wood Pole
N/D	= Nail and Disc	CP	= Concrete Pole
E	= Easement	LP	= Light Pole
U	= Utility	OHE	= Overhead Electric
D	= Drainage	BLDG	= Building
P	= Plat	CBS	= Concrete Block and Stucco
F	= Fired	FH	= Fire Hydrant
BM	= Benchmark	WPP	= Wood Power Pole
ELEV	= Elevation	PG	= Page
R	= Radius	MH	= Manhole
L	= Arc Length	CM	= Concrete Monument
Δ	= Central Angle	FPL	= Florida Power & Light
CHB	= Chord Bearing	ORB	= Official Records Book
ST LT	= Street Light	PBCR	= Palm Beach County Records
CONC.	= Concrete		

SURVEY NOTES:

1) ELEVATIONS SHOWN HEREON ARE BASED ON THE NATIONAL GEODETIC VERTICAL DATUM OF 1929
2) PARCEL AREA = 22,741 SQUARE FEET
3) BEARING BASIS IS PLAT BEARING ALONG THE EAST LINE OF LOTS 5, 6, 7 AND 8, BLOCK 10, LAUDER DEL MAR, OF S 05°44'40" E.
4) LEGAL DESCRIPTION FURNISHED BY CLIENT
5) BENCHMARK REFERENCE : NORTHWEST BOLT ON FIRE HYDRANT AT SOUTHEAST CORNER OF BIRCH ROAD AND ALHAMBRA STREET ELEVATION=6.81
6) NO TITLE OPINION OR ABSTRACT HAS BEEN PROVIDED. NO SEARCH OF THE PUBLIC RECORDS HAS BEEN MADE BY THE SURVEYOR. THERE MAY BE DEEDS, EASEMENTS, OR OTHER INSTRUMENTS, EITHER RECORDED OR UNRECORDED, WHICH MAY AFFECT THE SUBJECT PROPERTY.
7) BOAT LIFT AS SHOWN BASED ON INFORMATION AND PLANS PROVIDED FROM CLIENT.
8) WATERWAY WIDTH SHOWN HEREON IS BASED ON DISTANCES OBTAINED FROM UTILIZING AERIAL PHOTOGRAPHY AND NOT DIRECTLY MEASURED IN THE FIELD. MEASUREMENT TAKEN AT NORTH PROPERTY CORNER, WATERWAY WIDTH VARIES.

STREET ADDRESS:
209 N. BIRCH RD
FT LAUDERDALE, FL

BOUNDARY SURVEY:

I HEREBY CERTIFY This sketch of survey of the above described property is true and correct to the best of my knowledge and belief as recently surveyed under my direction, and conforms to the minimum technical standards as set forth by the Florida Board of Professional Land Surveyors in Chapter 5J17, Florida Administrative Code, pursuant to Section 472.027, Florida Statutes.

3/4/13
SCOTT A. REID (DATE OF LAST FIELD WORK)
Professional Surveyor & Mapper No. 6258
State of Florida

Not Valid Without The Signature And The Original Raised Seal Of A Florida Licensed Surveyor And Mapper

NO	REVISION	BY	DATE
6	ADD INFO PER COMMENTS FROM BOARD	SAR	3/18/13
5	UPDATE SVY & ADD PROPOSED BOAT LIFT	SAR	2/4/13
4	UPDATE SVY & ADD PROPOSED BOAT LIFT	RL	1/25/06
3	Update Survey FB 782/42-45	RL	4/19/06
2	Update Survey	JGH	3/28/02
1	Revise per attorney's comments dated 8-1-01	LJR	8-3-01

SURVEY OF PROPERTY DESCRIBED HEREON

ALHAMBRA PLACE
A CONDOMINIUM
FORT LAUDERDALE , FLORIDA

JOHN A. GRANT, JR., INC.
CONSULTING ENGINEERS
3333 NORTH FEDERAL HIGHWAY
BOCA RATON, FLORIDA 33431
PH NO 561-395-3333 FAX NO 561-395-3315
LICENSED BUSINESS NO LB 50

MADE	JR/LR	DATE 7-28-01	FB 759/59, 782/41-45
CHECKED	JAG	DATE 7-27-01	SCALE 1" = 20'
JOB NO	00-100-01KB		SHEET 1 OF 36

Drawing: K:\00-100-01KB\00-100-01KB SRVY.dwg 4 dwg 12 page(s) and 3 xrf plot

8

ALUMINUM 4-POST STANDARD BOAT LIFTS

BY NEPTUNE BOAT LIFT

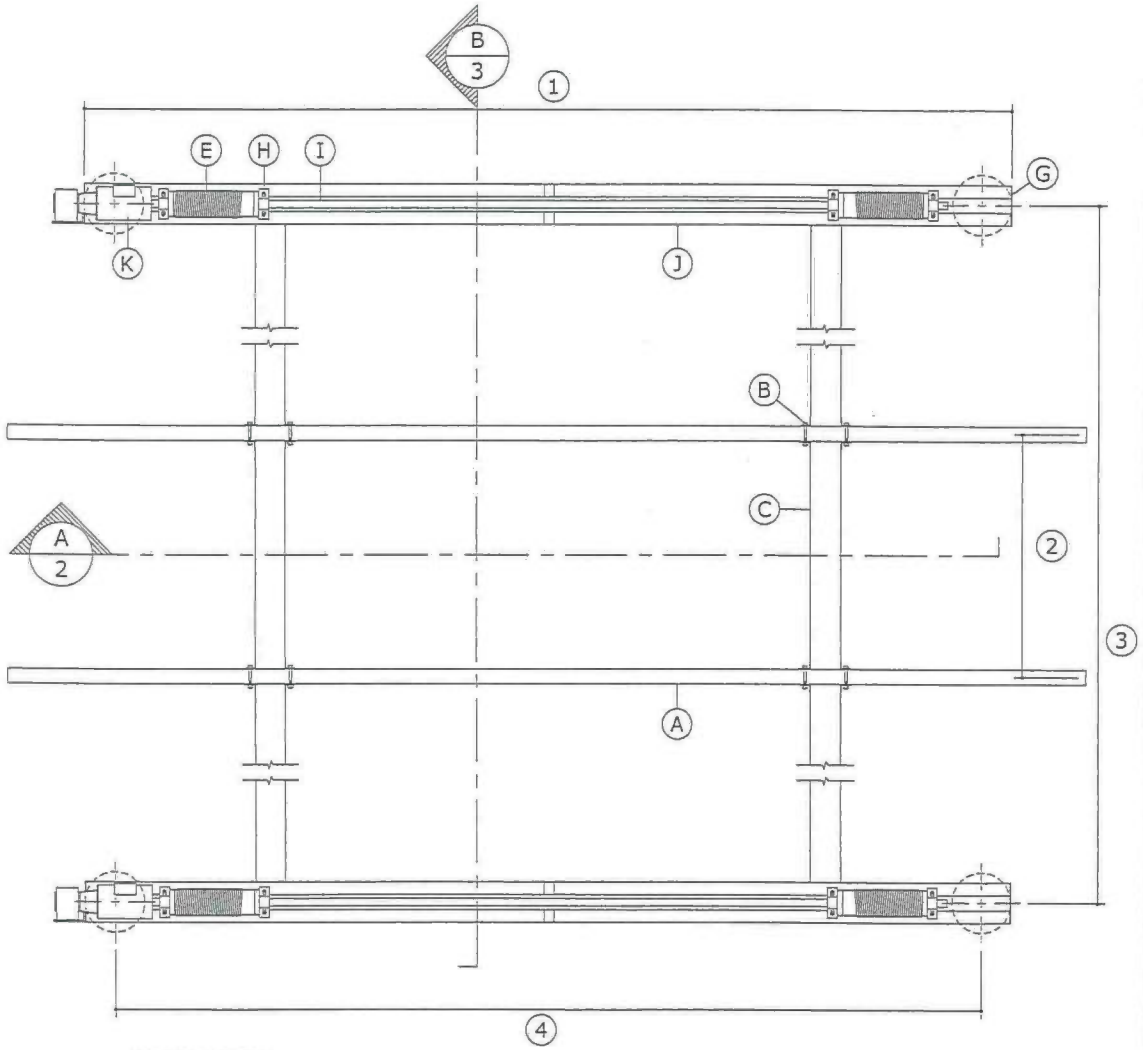

PLAN VIEW

SCALE 1/2" = 1'-0"

STRUCTURAL NOTES:

THE WORK SPECIFIED HEREIN HAS BEEN DESIGNED & ALL WORK SHALL BE IN ACCORDANCE WITH THE STRUCTURAL PROVISIONS OF THE 2010 FLORIDA BUILDING CODE.

NOTE:
THIS LIFTING STRUCTURE HAS BEEN DESIGNED TO WITHSTAND WIND LOADS ASSOCIATED WITH SPEEDS OF V_{ult} = 175 MPH, V_{ASD} = 136 MPH (3 SEC GUST) EXPOSURE 'D' WITHOUT A BOAT ON THE LIFT PER ASCE 7-10 USING ABOVE GROUND SIGN/WALL METHOD. THE LIFTING STRUCTURE INCLUDING BOAT HAS BEEN DESIGNED TO WITHSTAND WIND SPEEDS OF V_{ult} = 90 MPH IN EXPOSURE 'C' OR 70 MPH IN EXPOSURE 'D'.

THE OWNER IS RESPONSIBLE TO REMOVE BOAT FROM LIFT DURING WINDSTORM EVENT IN EXCESS OF Vasd AS CALCULATED BELOW. PER FBC 3105.5.3 STRUCTURES DESIGNED TO BE READILY REMOVED OR REPOSITIONED DURING PERIODS OF HIGH WIND VELOCITY SHALL BE POSTED WITH A LEGIBLE AND READILY VISIBLE DECAL OR PAINTED INSTRUCTIONS TO THE OWNER OR TENANT TO REMOVE OR REPOSITION THE STRUCTURE OR PART THEREOF DURING SUCH PERIODS OF TIME AS ARE DESIGNATED BY THE U.S.WEATHER BUREAU AS BEING A HURRICANE WARNING OR ALERT. THE LIFT OWNER SHALL BE NOTIFIED OF THESE CONDITIONS BY THE PERMIT HOLDER. NO WARRANTY,EXPRESSED OR IMPLIED, IS CONTAINED HEREIN. Vasd MAY BE CALCULATED BY THE FOLLOWING FORMULA: Vasd = √0.6 * Vult. DESIGN OF BOAT WIND LOADING HAS BEEN PERFORMED WITH THE FOLLOWING RATIOS AS CONFIRMED BY OTHERS: B/s=1.92, s/h = 1.00, FOR A Cf of 1.4 MAXIMUM WHERE H IS THE HEIGHT TO TOP OF BOAT, B IS HORIZONTAL DIMENSION, AND S IS VERTICAL DIMENSION.

CERTIFICATION OF BOAT LIFT TO EXISTING STRUCTURE AND ALL ELECTRICAL OR MECHANICAL CERTIFICATIONS ARE BY OTHERS; ENGINEER SEAL CERTIFIES ASSEMBLY OF LIFT ONLY.
THIS DETAIL IS PREPARED AS A GENERAL NON-SITE SPECIFIC MASTER PLAN SHEET DETAIL. TYPICAL FIELD CONDITIONS ARE ASSUMED IN THE DESIGN. WOOD PILES SHALL BE SEASONED SEALED WOOD WITH G=0.55 OR BETTER. SHOULD ANY SPECIFIC LOCATION DIFFER FROM THAT SPECIFIED HEREIN, OR STANDARD FIELD CONDITIONS, ADDITIONAL SPECIFIC ENGINEERING MAY BE REQUIRED AS DETERMINED BY THE BUILDING INSPECTOR AND PERMITTING CONTRACTOR. CARE SHALL BE TAKEN BY CONTRACTOR IN ALL APPLICATIONS OF THIS DETAIL. AS THIS IS NOT A SITE SPECIFIC DRAWING, IT IS THE RESPONSIBILITY OF OTHERS TO ENSURE THE INTEGRITY OF INSTALLATION TO THE HOST STRUCTURE.

ALUMINUM
MATERIAL: 6061 T6 ALUMINUM
ALL WELDS ARE MIN. 1/4" FULL FILLET WELD USING 5556 FILLER ALLOY. ALL WELDING MUST CONFORM TO AISC STEEL CONSTRUCTION MANUAL 13TH ED AS INSPECTED AND VERIFIED BY OTHERS. THE CONTRACTOR IS RESPONSIBLE TO INSULATE ALUMINUM MEMBERS FROM DISSIMILAR METALS TO PREVENT ELECTROLYSIS.

FASTENERS:
ALL ANCHORS TO BE HILTI BRAND OR MFR EQUIVALENT . ALL BOLTS SHALL BE HOT DIPPED GALVANIZED, OR STAINLESS STEEL & MEET THE REQUIREMENTS OF ASTM A304 WITH HARDENED WASHERS AND HEX NUTS. WASHERS SHALL BE USED BETWEEN WOOD & BOLT HEAD & BETWEEN WOOD & NUT. WHERE GENERIC FASTENERS ARE LABELED IN DETAILS, CAPACITIES SHALL BE EQUAL TO OR GREATER THAN HILTI KWIK BOLT II OR RED HEAD THRU BOLTS. EMBEDMENT DEPTHS SPECIFIED HEREIN ARE DEPTHS INTO SOLID SUBSTRATE AND DO NOT INCLUDE THICKNESS OF STUCCO OR OTHER FINISHES.

ALUMINUM MEMBERS IN CONTACT WITH CONCRETE AND WOOD SHALL BE PROTECTED BY "KOPPERS BITUMINOUS PAINT" OR POLYETHYLENE TAPE UHMW (ULTRA HIGH MOLECULAR WEIGHT) 11.7 mils (0.30 mm) MIN. TOTAL THICKNESS IN ACCORDANCE WITH CURRENT FLORIDA BUILDING CODE. ALL WELDS TO BE COVERED WITH ALUMINUM PAINT.

ENGINEERING EXPRESS HAS NOT VISITED THIS JOBSITE. INFORMATION CONTAINED HEREIN IS BASED ON CONTRACTOR SUPPLIED DATA AND MEASUREMENTS. ENGINEERING EXPRESS SHALL NOT BE HELD RESPONSIBLE OR LIABLE IN ANY WAY FOR ERRONEOUS OR INACCURATE DATA OR MEASUREMENTS. WORK SHALL BE FIELD VERIFIED PRIOR TO CONSTRUCTION. ENGINEERING EXPRESS SHALL BE NOTIFIED AND GIVEN AN OPPORTUNITY TO REEVALUATE OUR WORK UPON DISCOVERY OF ANY INACCURATE INFORMATION PRIOR TO MODIFICATION OF EXISTING FIELD CONDITIONS AND FABRICATION AND INSTALLATION OF MATERIALS.

ENGINEER SEAL AFFIXED HERETO VALIDATES STRUCTURAL DESIGN AS SHOWN ONLY. USE OF THIS SPECIFICATION BY CONTRACTOR, et. al. INDEMNIFIES & SAVES HARMLESS THIS ENGINEER FOR ALL COSTS & DAMAGES INCLUDING LEGAL FEES & APPELLATE FEES RESULTING FROM MATERIAL FABRICATION, SYSTEM ERECTION, & CONSTRUCTION PRACTICES BEYOND THAT WHICH IS CALLED FOR BY LOCAL, STATE, & FEDERAL CODES & FROM DEVIATIONS OF THIS PLAN. EXCEPT AS EXPRESSLY PROVIDED IN HEREIN, NO CERTIFICATIONS OR AFFIRMATIONS ARE INTENDED.

FRANK L. BENNARDO, P.E.
39570 STATE OF FLORIDA
09/26/2012
VALID FOR (1) JOB(s) ONLY
VALID ONLY WITH RAISED ENGINEER SEAL

LICENSED AFFILIATE OF
ENGINEERING EXPRESS®
160 SW 12th AVENUE, #106
DEERFIELD BEACH, FL 33442
Ph: (954) 354-0660 Fax: (954) 354-0443
WWW.ENGEXP.COM
CERT OF AUTH #8985

NEPTUNE BOAT LIFTS
100 SW 6th STREET
FORT LAUDERDALE, FL 33301
PHONE: (954) 524-3616 FAX: (954) 524-3604

ALUMINUM 4-POST STANDARD BOAT LIFT

REMARKS	DRWN	CHKD	DATE
INIT ISSUE	TSB	FLB	04/24/09
REV FOR 2010 FBC	TSB	FLB	3-30-12
CHANGED TO 175 MPH	AJL	FLB	09.14.12
-	-	-	-
-	-	-	-

00-NBL-0002

SCALE: 01

PAGE DESCRIPTION:

1 of 3

9

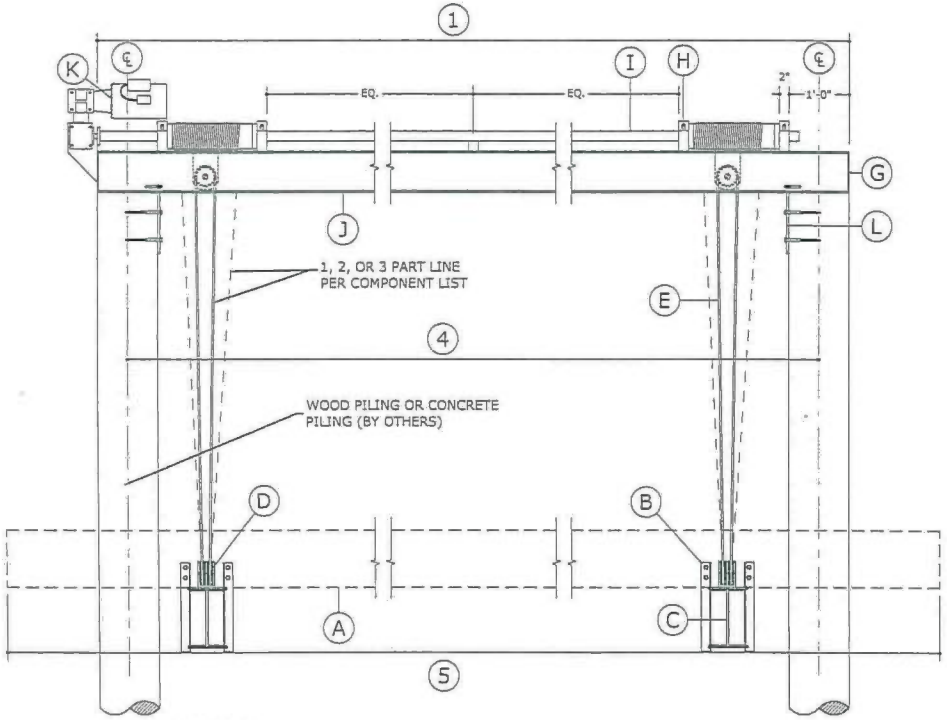

SECTION A
SCALE 1/2" = 1'-0"

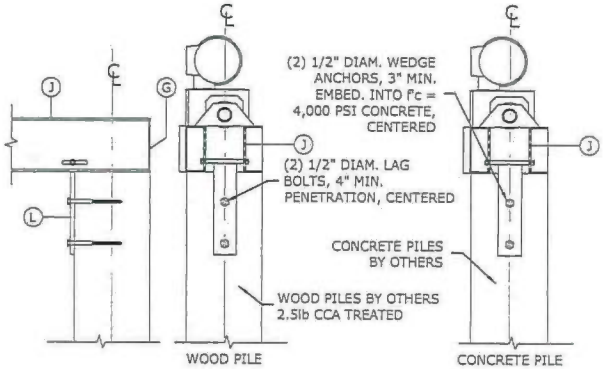

PILE MOUNTING DETAIL
SCALE ¾" = 1'-0"

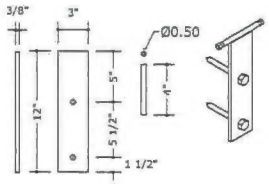

MOUNTING BRACKET DETAIL
SCALE 1" = 1'-0"

FRANK L. BENNARDO, P.E.
PE0066543
09/26/2012
VALID FOR (1) JOB(S) ONLY
VALID ONLY WITH RAISED ENGINEER SEAL

LICENSED AFFILIATE OF
ENGINEERING EXPRESS®
160 SW 12th AVENUE, #106
DEERFIELD BEACH, FL 33442
PH: (954) 354-0660 FAX: (954) 354-0443
WWW.ENGEXP.COM
CERT OF AUTH #8888

NEPTUNE BOAT LIFTS
100 SW 6th STREET
FORT LAUDERDALE, FL 33301
PHONE: (954) 524-3616 FAX: (954) 524-3604

ALUMINUM 4-POST STANDARD BOAT LIFT

REMARKS	DRWN	CHKD	DATE
INIT ISSUE	TSB	FLB	04/24/09
REV FOR 2010 FBC	TSB	FLB	3-30-12

00-NBL-0002
SCALE: 01
PAGE DESCRIPTION:

2 OF 3

09/26/2012 - 3:31pm kal F:\01 Project Files\Neptune Boat Lifts (NBL)\Master Plan Sheets\00-NBL-0002 4post Standard Lifts\4 Post Lift MPS_01a (2010 FBC).dwg

10

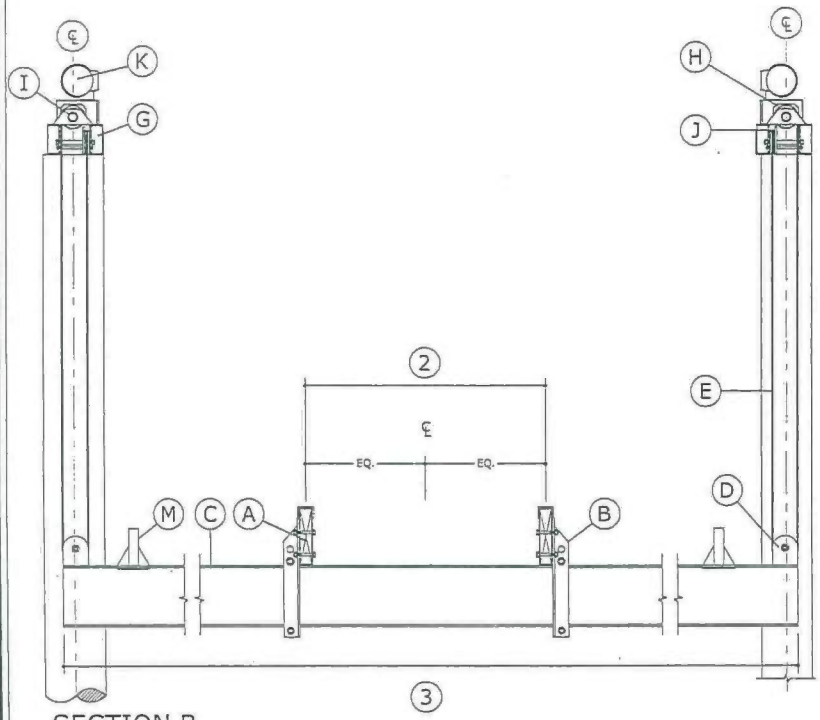

SECTION B
SCALE 1/2" = 1'-0"

LIST OF COMPONENTS

	LIFT CAPACITY (LB)	4,500	7,000	10,000	13,000	16,000	20.000	24,000
Ⓐ	BUNK	3"X8" PT SYP#1			3"X10" PT SYP#1			3"X12" PT SYP#1
Ⓑ	BUNK BRACKET SUPPORT	1/4"X2"X2"						
Ⓒ	LIFTER BEAM	AA I 6"X4.7		AA I 8"X6.3	AA I 8"X7.0	AA I 10"X10.3		AA I 12"X14.3
Ⓓ	SHEAVE PULLY PLATE	1/4"X4"X5" ANGLE						
Ⓔ	SS WIRE ROPE	5/16" 7X19 SS 304 (1 PART)		5/16" 7X19 SS 304 (2 PART)			5/16" 7X19 SS 304 (3 PART)	
Ⓕ	PILING MOUNT BRACKET	3/8"X3"X12" FLAT BAR						
Ⓖ	CARRIER BEAM END PLATE	1/4"X5" FLAT BAR		1/4"X6" FLAT BAR	1/4"X7" FLAT BAR		1/4"X8" FLAT BAR	
Ⓗ	DRIVE SHAFT BEARING BLOCK	2"X3" FLAT BAR						
Ⓘ	DRIVESHAFT	1-1/2" NOM. DIA. SH80 GALV PIPE						
Ⓙ	TOP CARRIER ASSEMBLY (2 C-CHANNELS PER ASSY)	AA CS 5"X2.2		AA CS 6"X2.8	AA CS 7"X3.2		AA CS 8"X4.3	AA CS 8"X5.6
Ⓚ	MOTOR AND GEAR BOX	ALUM. HOUSING						
Ⓛ	TOP CARRIER CONNECTOR	3/8"X3"X12" FLAT BAR						
Ⓜ	GUIDE POST SOCKET	2" NOM. DIA. SH80 ALUMN PIPE						

LIST OF DIMENSIONS

LIFT CAPACITY (LB)		4,500	7,000	10,000	13,000	16,000	20,000	24,000
DIMENSION MARK	①	150"	150"	150"	150"	150"	150"	192
	②	48"	48"	48"	48"	48"	48"	48"
	③	144"	144"	150"	150"	168"	168"	192"
	④	142"	142"	142"	142"	142"	142"	182"
	⑤	144"	144"	144"	144"	144"	168"	216"

FRANK L. BENNARDO, P.E.
PE-0047847
09/26/2012
VALID FOR (1) JOB(s) ONLY
VALID ONLY WITH RAISED ENGINEER SEAL

LICENSED AFFILIATE OF
ENGINEERING EXPRESS®
160 SW 12th AVENUE, #106
DEERFIELD BEACH, FL 33442
PH: (954) 354-0660 FAX: (954) 354-0443
WWW.ENGEXP.COM
CERT OF AUTH #8885

NEPTUNE BOAT LIFTS
100 SW 6th STREET
FORT LAUDERDALE, FL 33301
PHONE: (954) 524-3616 FAX: (954) 524-3604

ALUMINUM 4-POST STANDARD BOAT LIFT

REMARKS	DRWN	CHKD	DATE
RET ISSUE	TBB	FLB	04/24/09
REV FOR 2010 FBC	TBB	FLB	3-30-12

00-NBL-0002
SCALE: 01
PAGE DESCRIPTION:

3 OF 3

3

09/26/2012 - 3:31pm kat F:\01 Project Files\Neptune Boat Lifts (NBL)\Master Plan Sheets\00-NBL-0002 4post Standard Lift\4 Post Lift MPS_01a (2010 FBC).dwg

FILE

FORM #: 62-343.900 (1) Attachments 1 - 5
FORM TITLE: JOINT ENVIRONMENTAL RESOURCE PERMIT APPLICATION
DATE: Updated 1/24/2012
(Attachments 1-5 are not adopted in rule)

SECTION A

FOR AGENCY USE ONLY

ACOE Application #	DEP/WMD Application #
Date Application Received	*Date Application Received*
Proposed Project Lat.	Fee Received $
Proposed Project Long.	Fee Receipt #

PART 1:
Are any of the activities described in this application proposed to occur in, on, or over wetlands or other surface waters?
☐ yes ☐ no
Is this application being filed by or on behalf of a government entity or drainage district? ☐yes ☐no

A. Type of Environmental Resource Permit Requested (check at least one). See Attachment 2 for thresholds and descriptions.

- ☐ Noticed General - include information requested in Section B.
- ☐ Standard General (Single Family Dwelling) - include information requested in Sections C and D.
- ☐ Standard General (all other Standard General projects) - include information requested in Sections C and E.
- ☐ Individual (Single Family Dwelling) - include information requested in Sections C and D.
- ☐ Individual (all other Individual projects) - include information requested in Sections C and E.
- ☐ Conceptual - include information requested in Sections C and E.
- ☐ Mitigation Bank Permit (construction) - include information requested in Sections C and F. (If the proposed mitigation bank involves the construction of a surface water management system requiring another permit defined above, check the appropriate box and submit the information requested by the applicable section.)
- ☐ Mitigation Bank (conceptual) - include information requested in Sections C and F.

B. Type of activity for which you are applying (check at least one)

- ☐ Construction or operation of a new system, other than a solid waste facility, including dredging or filling in, on or over wetlands and other surface waters.
- ☐ Construction, expansion or modification of a solid waste facility.
- ☐ Alteration or operation of an existing system which was not previously permitted by a WMD or DEP.
- ☐ Modification of a system previously permitted by a WMD or DEP.

Provide previous permit numbers:_____

- ☐ Alteration of a system
- ☐ Abandonment of a system
- ☐ Removal of a system
- ☐ Extension of permit duration
- ☐ Construction of additional phases of a system

C. Are you requesting authorization to use Sovereign Submerged Lands?
☐yes ☐no
(See Section G and Attachment 5 for more information before answering this question.)

D. For activities in, on, or over wetlands or other surface waters, check type of federal dredge and fill permit requested:
☐Individual ☐Programmatic General ☐General
☐Nationwide ☐Not Applicable

E. Are you claiming to qualify for an exemption? ☐yes ☐no
If yes, provide rule number if known. _____

12

PART 3: A. OWNER(S) OF LAND	B. ENTITY TO RECEIVE PERMIT (IF OTHER THAN OWNER)
Name HANK HURY & JAMES CROSS	Name
Title and Company	Title and Company
Address 209 N BIRCH ROAD, #1202	Address
City, State, Zip FORT LAUDERDALE, FL 33304	City, State, Zip
Telephone and Fax	Telephone and Fax
E-mail Address: (optional) HANKHURY@GMAIL.COM	E-mail Address: (optional)
C. AGENT AUTHORIZED TO SECURE PERMIT	**D. CONSULTANT (IF DIFFERENT FROM AGENT)**
Name	Name David Nutter
Title and Company BOATLIFTS N DOCKS OF SOUTH FLORIDA	Title and Company
Address 967 NW 31st Avenue	Address
City, State, Zip Pompano Beach, FL 33069	City, State, Zip
Telephone and Fax 954-971-0811	Telephone and Fax 954-868-8476
E-mail Address: (optional) Docksandlifts@gmail.com	E-mail Address: (optional) nutt3839@bellsouth.net

PART 4: (Please provide metric equivalent for federally funded projects):

A. Name of Project, including phase if applicable: HURY CROSS BOATLIFT

B. Is this application for part of a multi-phase project? ☐Yes ☐No

C. Total applicant-owned area contiguous to the project?
_____ ac.; _____ ha.

D. Total area served by the system: _____ ac.; _____ ha.

E. Impervious area for which a permit is sought: _____ ac.; _____ ha.

F. Volume of water that the system is capable of impounding:
_____ ac. ft.; _____ m^3

G. What is the total area of work in, on, or over wetlands or other surface waters?
_____ ac.; _____ ha.; 1571.45 sq. ft.; _____ sq. m.

H. Total volume of material to be dredged: _____ yd^3 ; _____ m^3

I. Number of new boat slips proposed: 0 wet slips; 0 dry slips

13

PART 5:

Project location (use additional sheets if needed):
County(ies) BROWARD

Section(s) 01	Township 50S	Range 42E
Section(s)	Township	Range
Section(s)	Township	Range

Land Grant name, if applicable: _____

Tax Parcel Identification Number: 5042-01-AN-0200

Street AddressRoador other location: 209 N BIRCH, #1202

City, Zip Code, if applicable: FORT LAUDERDALE, FL 33304

PART 6: Describe in general terms the proposed project, system, or activity.
EXISTING SEAWALL TO REMAIN; EXISTING 65.1' X 19.5' CONCRETE DOCK TO REMAIN; (2) EXISTING 30.2' X 5' WOOD PIERS TO REMAIN; (5) EXISTING MOORING PILINGS TO REMAIN; EXISTING 8-POST BOATLIFT TO REMAIN; INSTALL 24000LB 4-POST BOATLIFT WITH (4) NEW ~~10~~ 12" DIA. WOOD PILINGS

14

PART 7:

A. If there have been any pre-application meetings, including on-site meetings, with regulatory staff, please list the date(s), location(s), and names of key staff and project representatives.

_____

B. Please identify by number any MSSW/Wetland Resource/ERP/ACOE Permits pending, issued or denied for projects at the location, and any related enforcement actions.

Agency	Date	No.\Type of Application	Action Taken
_____	_____	_____	_____
_____	_____	_____	_____
_____	_____	_____	_____

C. Note: The following information is required for projects proposed to occur in, on or over wetlands that need a federal dredge and fill permit or an authorization to use state owned submerged lands. Please provide the names, addresses and zip codes of property owners whose property directly adjoins the project (excluding application) and/or (for proprietary authorizations) is located within a 500 ft. radius of the applicant's land. Please attach a plan view showing the owner's names and adjoining property lines. Attach additional sheets if necessary.

1
VERSAILLES CO-OP
215 N BIRCH ROAD
FORT LAUDERDALE, FL 33301

2.
SPRINGBROOK GARDNENS CONDO
125 N BIRCH ROAD
FORT LAUDERDALE, FL 33304

3.

4.

5.

6.

7.

8.

15

PART 8:

A. By signing this application form, I am applying, or I am applying on behalf of the applicant, for the permit and any proprietary authorizations identified above, according to the supporting data and other incidental information filed with this application. I am familiar with the information contained in this application and represent that such information is true, complete and accurate. I understand this is an application and not a permit, and that work prior to approval is a violation. I understand that this application and any permit issued or proprietary authorization issued pursuant thereto, does not relive me of any obligation for obtaining any other required federal, state, water management district or local permit prior to commencement of construction. I agree, or I agree on behalf of the applicant, to operate and maintain the permitted system unless the permitting agency authorizes transfer of the permit to a responsible operation entity. I understand that knowingly making any false statement or representation in this application is a violation of Section 373.430, F.S. and 18 U.S.C. Section 1001.

Typed/Printed Name of Applicant (If no Agent is used) or Agent (If one is so authorized below)

Signature of Applicant/Agent — Date 1/3/13

(Corporate Title if applicable)

AN AGENT MAY SIGN ABOVE ONLY IF THE APPLICANT COMPLETES THE FOLLOWING:

B. I hereby designate and authorize the agent listed above to act on my behalf, or on behalf of my corporation, as the agent in the processing of this application for the permit and/or proprietary authorization indicated above; and to furnish, on request, supplemental information in support of the application. In addition, I authorize the above-listed agent to bind me, or my corporation, to perform any requirements which may be necessary to procure the permit or authorization indicated above. I understand that knowingly making any false statement or representation in this application is a violation of Section 373.430, F.S. and 18 U.S.C. Section 1001.

Typed/Printed Name of Applicant	Signature of Applicant	Date
Hank Hury	Hank Hury	1-2-13

(Corporate Title if applicable)

Please note: The applicant's original signature (not a copy) is required above.

PERSON AUTHORIZING ACCESS TO THE PROPERTY MUST COMPLETE THE FOLLOWING:

C. I either own the property described in this application or I have legal authority to allow access to the property, and I consent, after receiving prior notification, to any site visit on the property by agents or personnel from the Department of Environmental Protection, the Water Management District and the U.S. Army Corps of Engineers necessary for the review and inspection of the proposed project specified in this application. I authorize these agents or personnel to enter the property as many times as may be necessary to make such review and inspection. Further, I agree to provide entry to the project site for such agents or personnel to monitor permitted work if a permit is granted.

Typed/Printed Name of Applicant	Signature of Applicant	Date
Hank Hury	Hank Hury	1-2-13

(Corporate Title if applicable)

TABLE 4
DOCKING FACILITY SUMMARY

Type of Structure*	Type of Work**	Number of Identical Docks	Length (feet)	Width (feet)	Height (feet)	Total square feet over water	Number of slips
Dock	Existing	1	65.1	19.5		1269.45	1
Pier	Existing	2	30.2	5		302	4

	TOTALS:	Existing	Proposed
*Dock, Pier, Finger Pier, or other structure (please specify what type)	Number of Slips	5	5
**New, Replaced, Existing (unaltered), Removed, or Altered/Modified	Square Feet over the water	1571.45	1571.45

Use of Structure:
Multifamily Residential

Will the docking facility provide:

Live-aboard Slips? If yes, Number:

Fueling Facilities: If yes, Number

Sewage Pump-out Facilities? If yes, Number:

Other Supplies or Services Required for Boating (excluding refreshments, bait and tackle)
☐ Yes ☐ No

Type of Materials for Decking and Pilings (i.e., CCA, pressure treated wood, plastic, or concrete)

Pilings
Decking

Proposed Dock-Plank Spacing (if applicable)

Proposed Size (length and draft), Type, and Number of Boats Expected to Use or Proposed to be Mooring at the facility)

YAHOO! MAPS

209 N Birch Rd, Fort Lauderdale, FL 33304-4315

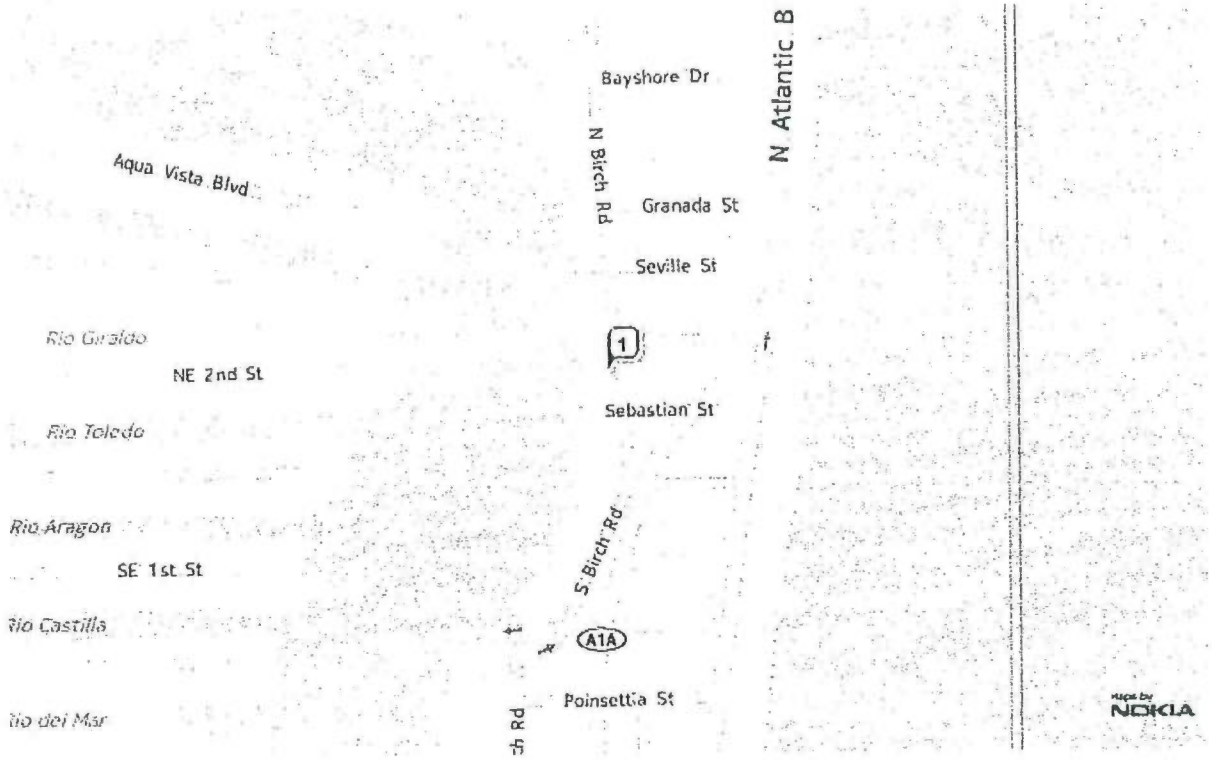

18

LORI PARRISH BROWARD COUNTY PROPERTY APPRAISER

Site Address	209 N BIRCH ROAD 1202 , FORT LAUDERDALE
Property Owner	CROSS,JAMES D & HURY,HANK
Mailing Address	209 N BIRCH ROAD UNIT 1202 FORT LAUDERDALE FL 33304

ID #	5042 01 AN 0200
Millage	0312
Use	04

Abbreviated Legal Description	ALHAMBRA PLACE CONDO UNIT 1202

The just values displayed below were set in compliance with Sec. 193.011, Fla. Stat., and include a reduction for costs of sale and other adjustments required by Sec. 193.011(8).

Property Assessment Values
Click here to see 2012 Exemptions and Taxable Values to be reflected on Nov. 1, 2012 tax bill.

Year	Land	Building	Just / Market Value	Assessed / SOH Value	Tax
2013	$113,510	$1,021,610	$1,135,120	$1,135,120	
2012	$113,510	$1,021,610	$1,135,120	$1,135,120	$22,190.04
2011	$133,620	$1,202,550	$1,336,170	$1,275,280	$24,929.59

IMPORTANT: The 2013 values currently shown are "roll over" values from 2012. These numbers will change frequently online as we make various adjustments until they are finalized on June 1. Please check back here AFTER June 1, 2013, to see the actual proposed 2013 assessments and portability values.

2013 Exemptions and Taxable Values by Taxing Authority

	County	School Board	Municipal	Independent
Just Value	$1,135,120	$1,135,120	$1,135,120	$1,135,120
Portability	0	0	0	0
Assessed/SOH 06	$1,135,120	$1,135,120	$1,135,120	$1,135,120
Homestead 100%	$25,000	$25,000	$25,000	$25,000
Add. Homestead	$25,000	0	$25,000	$25,000
Wid/Vet/Dis	0	0	0	0
Senior	0	0	0	0
Exempt Type	0	0	0	0
Taxable	$1,085,120	$1,110,120	$1,085,120	$1,085,120

Sales History

Date	Type	Price	Book	Page
2/22/2005	WD	$1,950,000	39131	1444

Land Calculations

Price	Factor	Type
Adj. Bldg. S.F.		3910
Units/Beds/Baths		1/3/3.5

Special Assessments

Fire	Garb	Light	Drain	Impr	Safe	Storm	Clean	Misc
03								
R								
1								

19

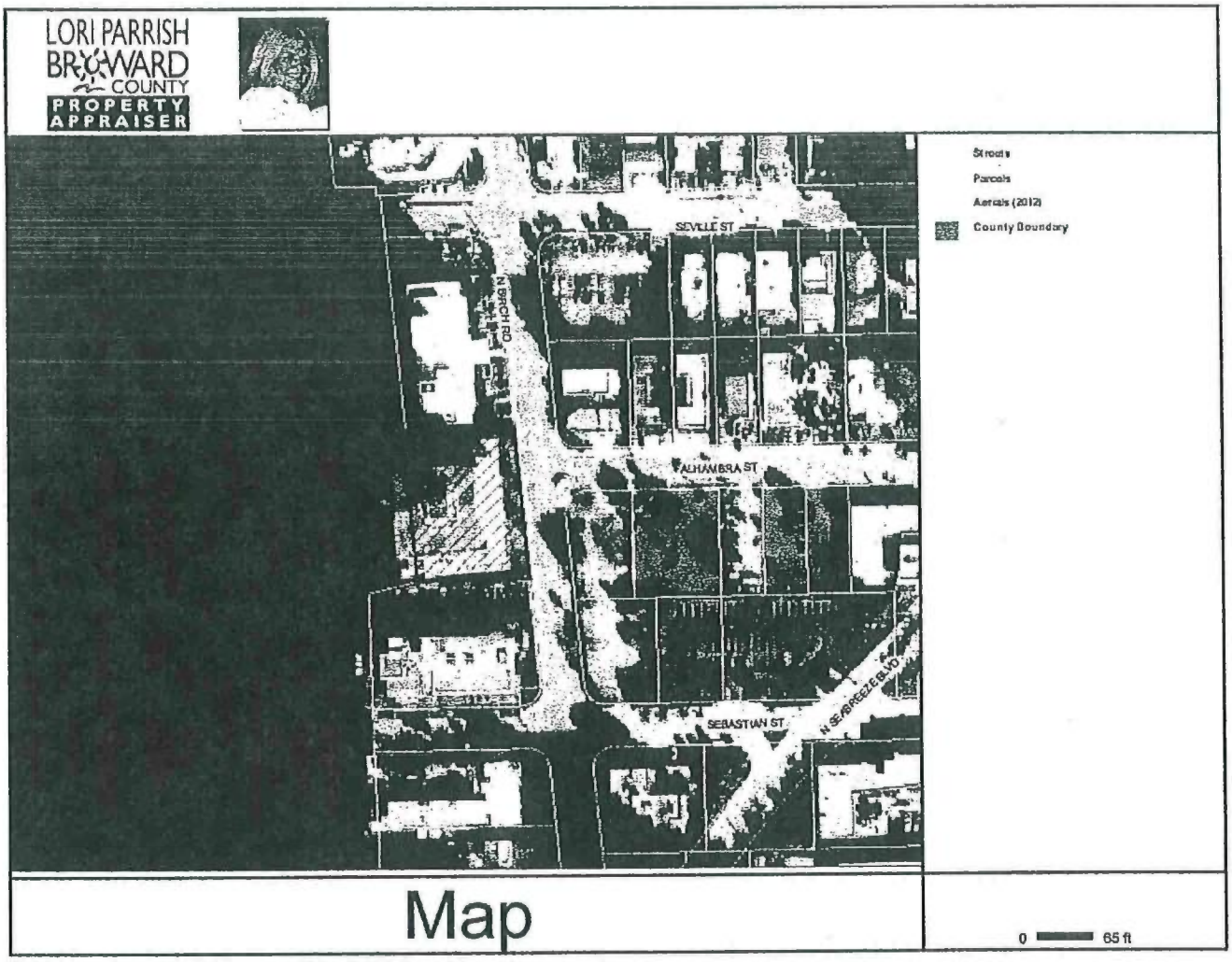

Created on 1/4/2013 9:45:38 AM using ArcIMS 4.0.1. Source: Broward County Property Appraiser

20

EXISTING CONDITIONS

SCALE: 1" = 50'-0"

SKETCH OF SURVEY

BOUNDARY SURVEY & SITE PLAN (PROPOSED FACILITIES)

LEGAL DESCRIPTION

The south one-half (S 1/2) of lot 5 and all of lots 6, 7, and 8, Block 10, LAUDER DEL MAR, Plat Book 2, page 30, Fort Lauderdale, Broward County, Florida.

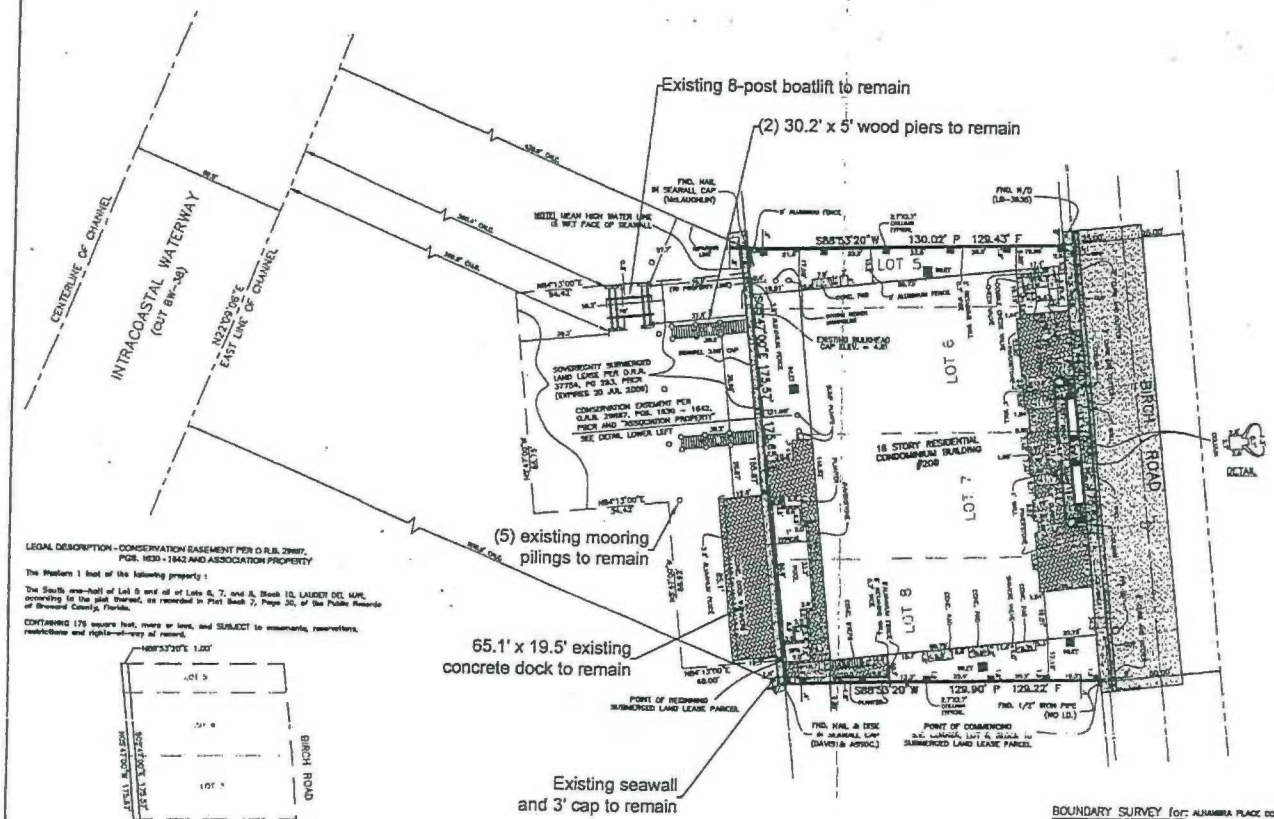

LEGAL DESCRIPTION - CONSERVATION EASEMENT PER O.R.B. 29687, PGS. 1630 - 1642 AND ASSOCIATION PROPERTY

The Western 1 foot of the following property:

The South one-half of Lot 5 and all of Lots 6, 7, and 8, Block 10, LAUDER DEL MAR, according to the plat thereof, as recorded in Plat Book 2, Page 30, of the Public Records of Broward County, Florida.

CONTAINING 179 square feet, more or less, and SUBJECT to easements, reservations, restrictions and rights-of-way of record.

LOCATION MAP
N.T.S.

GRAPHIC SCALE IN FEET
SCALE: 1" = 20'

SECTION 1, TOWNSHIP 50 SOUTH, RANGE 42 EAST

LEGEND

FND	= Found	C/L	= Centerline
IR	= Iron Rod	W/F	= Wood Fence
IP	= Iron Pipe	CLF	= Chain Link Fence
P/C	= Plastic Cap	FL	= Flagpole
R/C	= Red and Cap	W/P	= Wood Pole
P/D	= Nail and Disk	C/P	= Concrete Pole
C	= Centerline	LP	= Light Pole
U	= Utility	OHE	= Overhead Electric
D	= Drainage	BLDG	= Building
F	= Field	CBS	= Concrete Block and Stucco
Fld	= Field	FH	= Fire Hydrant
Bm	= Benchmark	WPP	= Wood Power Pole
ELEV	= Elevation	PG	= Page
R	= Radius	MH	= Manhole
L	= Arc Length	CM	= Concrete Monument
Δ	= Central Angle	FPL	= Florida Power & Light
CHB	= Chord Bearing	ORB	= Official Records Book
SL LT	= Street Light	PBCR	= Palm Beach County Records
CONC	= Concrete		

SURVEY NOTES:

-ELEVATIONS SHOWN HEREON ARE BASED ON THE NATIONAL GEODETIC VERTICAL DATUM OF 1929.

-PARCEL AREA = 22,741 SQUARE FEET

-BEARING BASIS IS PLAT BEARING ALONG THE EAST LINE OF LOTS 5, 6, 7 AND 8, BLOCK 10, LAUDER DEL MAR, OF S 05°44'40" E.

-LEGAL DESCRIPTION FURNISHED BY CLIENT.

-BENCHMARK REFERENCE : NORTHWEST BOLT ON FIRE HYDRANT AT SOUTHEAST CORNER OF BIRCH ROAD AND ALHAMBRA STREET ELEVATION=6.81

-NO TITLE OPINION OR ABSTRACT HAS BEEN PROVIDED. NO SEARCH OF THE PUBLIC RECORDS HAS BEEN MADE BY THE SURVEYOR; THERE MAY BE DEEDS, EASEMENTS, OR OTHER INSTRUMENTS, EITHER RECORDED OR UNRECORDED, WHICH MAY AFFECT THE SUBJECT PROPERTY.

-BOAT LIFT AS SHOWN BASED ON CAD FILE PROVIDED FROM CLIENT (209 LEASE.DWG).

BOUNDARY SURVEY for: ALHAMBRA PLACE CONDOMINIUM ASSOCIATION, INC.

I HEREBY CERTIFY : This sketch of survey of the above described property is true and correct to the best of my knowledge and belief as recently surveyed under my direction, and conforms to the minimum technical standards as set forth by the Florida Board of Professional Land Surveyors in Chapter 61G17, Florida Administrative Code, pursuant to Section 472.027, Florida Statutes.

3/23/09

SCOTT A. ROTH
Registered Land Surveyor No. 5146
State of Florida

Not valid without the signature and the original raised seal of a Florida Licensed Surveyor and Mapper.

FIELD BOOK 758, PAGE 58; FIELD BOOK 792, PAGES 41 - 43

NO.	REVISION	BY	DATE
4	UPDATE SHT 8 ADD PROPOSED BOAT LIFT	RL	3/23/09
3	Update Survey Per 792/40-45	RL	3/18/09
2	Update Survey	JGH	3/16/07
1	Revise per attorney's comments dated 8-1-06	LJR	8-7-06

SURVEY OF PROPERTY DESCRIBED HEREON

ALHAMBRA PLACE
A CONDOMINIUM
FORT LAUDERDALE, FLORIDA

JOHN A. GRANT, JR., INC.
CONSULTING ENGINEERS
3333 NORTH FEDERAL HIGHWAY
BOCA RATON, FLORIDA 33431
PH. NO. 561-395-3333 FAX NO. 561-395-3318
LICENSED BUSINESS NO. LB 50

MADE JGH DATE 2-21-91	TRACED — DATE —		
CHECKED RL DATE 2-22-91	SCALE 1" = 20'		
JOB NO. 90-189-0149	SHEET 1 OF 2		

21

PROPOSED CONDITIONS

SCALE:1" = 50'-0"

SKETCH OF SURVEY

BOUNDARY SURVEY & SITE PLAN (PROPOSED FACILITIES)

LEGAL DESCRIPTION

The south one-half (S 1/2) of lot 5 and all of lots 6, 7, and 8, Block 10, LAUDER DEL MAR, Plat Book 2, page 30, Fort Lauderdale, Broward County, Florida.

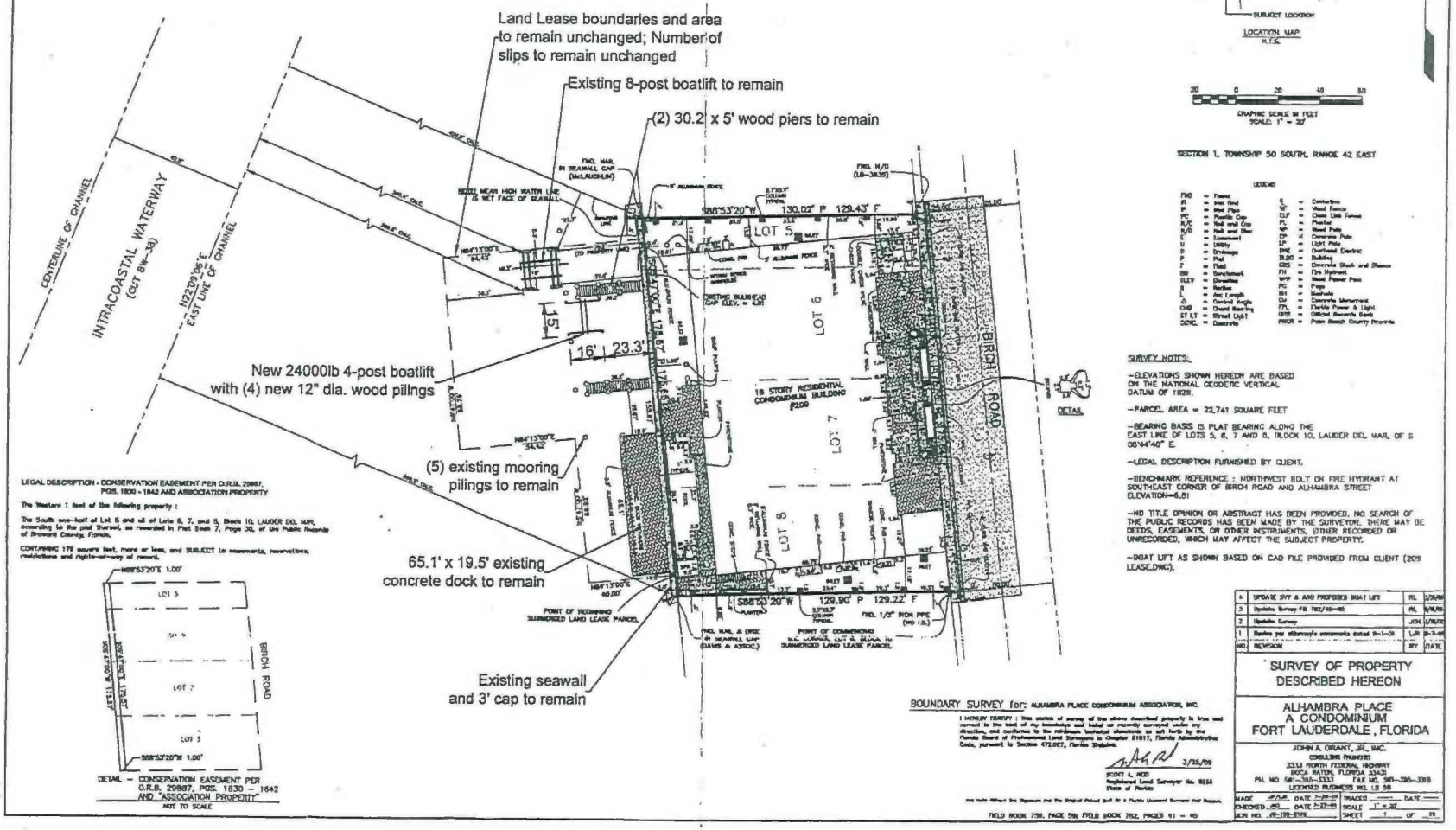

LOCATION MAP
N.T.S.

GRAPHIC SCALE IN FEET
SCALE: 1" = 20'

SECTION 1, TOWNSHIP 50 SOUTH, RANGE 42 EAST

LEGEND

FND	= Found	C/C	= Centerline
IR	= Iron Rod	W/F	= Wood Fence
IPC	= Iron Pipe	CLF	= Chain Link Fence
PC	= Plastic Cap	P	= Planter
R/C	= Rod and Cap	S.P.	= Sign Post
R/D	= Rod and Disc	W	= Wood Pole
E	= Easement	C.P.	= Concrete Pole
U	= Utility	L.P.	= Light Pole
D	= Drainage	OHW	= Overhead Electric
P	= Plat	B.OD	= Building
F	= Field	CBS	= Concrete Block and Stucco
BM	= Benchmark	F.H.	= Fire Hydrant
ELEV	= Elevation	W.P.	= Wood Power Pole
B	= Bearing	P.C.	= Page
L	= Arc Length	M	= Meters
Δ	= Central Angle	C.M.	= Concrete Monument
CHB	= Chord Bearing	F.P.L.	= Florida Power & Light
ST LT	= Street Light	ORB	= Official Records Book
CONC.	= Concrete	PBCR	= Palm Beach County Records

SURVEY NOTES:

-ELEVATIONS SHOWN HEREON ARE BASED ON THE NATIONAL GEODETIC VERTICAL DATUM OF 1929.

-PARCEL AREA = 22,741 SQUARE FEET

-BEARING BASIS IS PLAT BEARING ALONG THE EAST LINE OF LOTS 5, 6, 7 AND 8, BLOCK 10, LAUDER DEL MAR, OF S 06°44'40" E.

-LEGAL DESCRIPTION FURNISHED BY CLIENT.

-BENCHMARK REFERENCE : NORTHWEST BOLT ON FIRE HYDRANT AT SOUTHEAST CORNER OF BIRCH ROAD AND ALHAMBRA STREET ELEVATION=6.81

-NO TITLE OPINION OR ABSTRACT HAS BEEN PROVIDED. NO SEARCH OF THE PUBLIC RECORDS HAS BEEN MADE BY THE SURVEYOR. THERE MAY BE DEEDS, EASEMENTS, OR OTHER INSTRUMENTS, OTHER RECORDED OR UNRECORDED, WHICH MAY AFFECT THE SUBJECT PROPERTY.

-BOAT LIFT AS SHOWN BASED ON CAD FILE PROVIDED FROM CLIENT (209 LEASE.DWG).

LEGAL DESCRIPTION - CONSERVATION EASEMENT PER O.R.B. 29987, PGS. 1630 - 1642 AND ASSOCIATION PROPERTY

The Western 1 foot of the following property :

The South one-half of Lot 5 and all of Lots 6, 7, and 8, Block 10, LAUDER DEL MAR, according to the plat thereof, as recorded in Plat Book 2, Page 30, of the Public Records of Broward County, Florida.

CONTAINING 179 square feet, more or less, and SUBJECT to easements, reservations, restrictions and rights-of-way of record.

DETAIL - CONSERVATION EASEMENT PER O.R.B. 29987, PGS. 1630 - 1642 AND "ASSOCIATION PROPERTY"
NOT TO SCALE

BOUNDARY SURVEY for: ALHAMBRA PLACE CONDOMINIUM ASSOCIATION, INC.

I HEREBY CERTIFY : That sketch of survey of the above described property is true and correct to the best of my knowledge and belief as recently surveyed under my direction, and conforms to the minimum technical standards as set forth by the Florida Board of Professional Land Surveyors in Chapter 61G17, Florida Administrative Code, pursuant to Section 472.027, Florida Statutes.

3/25/09
SCOTT A. ACD
Registered Land Surveyor No. 6254
State of Florida

FIELD BOOK 759, PAGE 59; FIELD BOOK 752, PAGES 41 - 45

NO.	REVISION	BY	DATE
4	UPDATE SVY & AND PROPOSED BOAT LIFT	RL	3/25/09
3	Update Survey FB 752/40-45	RL	9/8/05
2	Update Survey	JOH	1/18/05
1	Revise per attorney's comments dated 9-1-04	LJB	9-3-04

SURVEY OF PROPERTY DESCRIBED HEREON

ALHAMBRA PLACE
A CONDOMINIUM
FORT LAUDERDALE, FLORIDA

JOHN A. GRANT, JR., INC.
CONSULTING ENGINEERS
3313 NORTH FEDERAL HIGHWAY
BOCA RATON, FLORIDA 33431
PH. NO. 561-395-3333 FAX NO. 561-395-3315
LICENSED BUSINESS NO. LB 56

MADE JAG DATE 7-28-97 TRACES ____ DATE ____
CHECKED AG DATE 7-28-97 SCALE 1" = 20'
JOB NO. 96-192-0199 SHEET 1 OF 19

22

ALUMINUM 4-POST STANDARD BOAT LIFTS

BY NEPTUNE BOAT LIFT

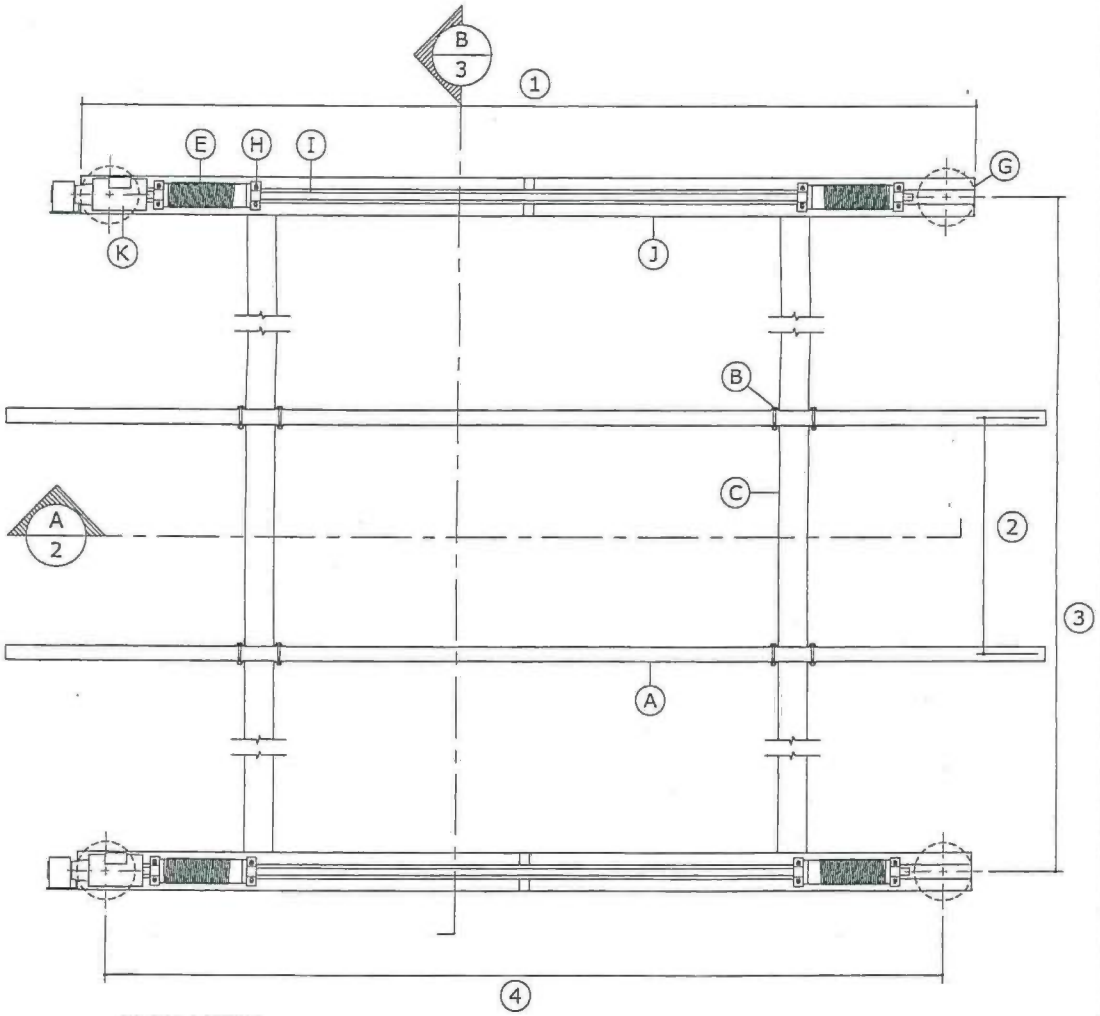

PLAN VIEW

SCALE 1/2" = 1'-0"

STRUCTURAL NOTES:

THE WORK SPECIFIED HEREIN HAS BEEN DESIGNED & ALL WORK SHALL BE IN ACCORDANCE WITH THE STRUCTURAL PROVISIONS OF THE 2010 FLORIDA BUILDING CODE.

NOTE:
THIS LIFTING STRUCTURE HAS BEEN DESIGNED TO WITHSTAND WIND LOADS ASSOCIATED WITH SPEEDS OF V_{ult} = 170 MPH, V_{ASD} = 132 MPH (3 SEC GUST) EXPOSURE 'D' WITHOUT A BOAT ON THE LIFT PER ASCE 7-10 USING ABOVE GROUND SIGN/WALL METHOD. THE LIFTING STRUCTURE INCLUDING BOAT HAS BEEN DESIGNED TO WITHSTAND WIND SPEEDS OF V_{ult} = 90 MPH IN EXPOSURE 'C' OR 70 MPH IN EXPOSURE 'D'.

THE OWNER IS RESPONSIBLE TO REMOVE BOAT FROM LIFT DURING WINDSTORM EVENT IN EXCESS OF Vasd AS CALCULATED BELOW. PER FBC 3105.5.3 STRUCTURES DESIGNED TO BE READILY REMOVED OR REPOSITIONED DURING PERIODS OF HIGH WIND VELOCITY SHALL BE POSTED WITH A LEGIBLE AND READILY VISIBLE DECAL OR PAINTED INSTRUCTIONS TO THE OWNER OR TENANT TO REMOVE OR REPOSITION THE STRUCTURE OR PART THEREOF DURING SUCH PERIODS OF TIME AS ARE DESIGNATED BY THE U.S.WEATHER BUREAU AS BEING A HURRICANE WARNING OR ALERT. THE LIFT OWNER SHALL BE NOTIFIED OF THESE CONDITIONS BY THE PERMIT HOLDER. NO WARRANTY,EXPRESSED OR IMPLIED, IS CONTAINED HEREIN. Vasd MAY BE CALCULATED BY THE FOLLOWING FORMULA: Vasd = √0.6 * Vult. DESIGN OF BOAT WIND LOADING HAS BEEN PERFORMED WITH THE FOLLOWING RATIOS AS CONFIRMED BY OTHERS: B/s=1.92, s/h = 1.00, FOR A Cf of 1.4 MAXIMUM WHERE H IS THE HEIGHT TO TOP OF BOAT, B IS HORIZONTAL DIMENSION, AND S IS VERTICAL DIMENSION.

CERTIFICATION OF BOAT LIFT TO EXISTING STRUCTURE AND ALL ELECTRICAL OR MECHANICAL CERTIFICATIONS ARE BY OTHERS; ENGINEER SEAL CERTIFIES ASSEMBLY OF LIFT ONLY.
THIS DETAIL IS PREPARED AS A GENERAL NON-SITE SPECIFIC MASTER PLAN SHEET DETAIL. TYPICAL FIELD CONDITIONS ARE ASSUMED IN THE DESIGN. WOOD PILES SHALL BE SEASONED SEALED WOOD WITH G=0.55 OR BETTER. SHOULD ANY SPECIFIC LOCATION DIFFER FROM THAT SPECIFIED HEREIN, OR STANDARD FIELD CONDITIONS, ADDITIONAL SPECIFIC ENGINEERING MAY BE REQUIRED AS DETERMINED BY THE BUILDING INSPECTOR AND PERMITTING CONTRACTOR. CARE SHALL BE TAKEN BY CONTRACTOR IN ALL APPLICATIONS OF THIS DETAIL. AS THIS IS NOT A SITE SPECIFIC DRAWING, IT IS THE RESPONSIBILITY OF OTHERS TO ENSURE THE INTEGRITY OF INSTALLATION TO THE HOST STRUCTURE.

ALUMINUM
MATERIAL: 6061 T6 ALUMINUM
ALL WELDS ARE MIN. 1/4" FULL FILLET WELD USING 5556 FILLER ALLOY. ALL WELDING MUST CONFORM TO AISC STEEL CONSTRUCTION MANUAL 13TH ED AS INSPECTED AND VERIFIED BY OTHERS. THE CONTRACTOR IS RESPONSIBLE TO INSULATE ALUMINUM MEMBERS FROM DISSIMILAR METALS TO PREVENT ELECTROLYSIS.

FASTENERS:
ALL ANCHORS TO BE HILTI BRAND OR MFR EQUIVALENT. ALL BOLTS SHALL BE HOT DIPPED GALVANIZED, OR STAINLESS STEEL & MEET THE REQUIREMENTS OF ASTM A304 WITH HARDENED WASHERS AND HEX NUTS. WASHERS SHALL BE USED BETWEEN WOOD & BOLT HEAD & BETWEEN WOOD & NUT. WHERE GENERIC FASTENERS ARE LABELED IN DETAILS, CAPACITIES SHALL BE EQUAL TO OR GREATER THAN HILTI KWIK BOLT II OR RED HEAD THRU BOLTS. EMBEDMENT DEPTHS SPECIFIED HEREIN ARE DEPTHS INTO SOLID SUBSTRATE AND DO NOT INCLUDE THICKNESS OF STUCCO OR OTHER FINISHES.

ALUMINUM MEMBERS IN CONTACT WITH CONCRETE AND WOOD SHALL BE PROTECTED BY "KOPPERS BITUMINOUS PAINT" OR POLYETHYLENE TAPE UHMW (ULTRA HIGH MOLECULAR WEIGHT) 11.7 mils (0.30 mm) MIN. TOTAL THICKNESS IN ACCORDANCE WITH CURRENT FLORIDA BUILDING CODE. ALL WELDS TO BE COVERED WITH ALUMINUM PAINT.

ENGINEERING EXPRESS HAS NOT VISITED THIS JOBSITE. INFORMATION CONTAINED HEREIN IS BASED ON CONTRACTOR SUPPLIED DATA AND MEASUREMENTS. ENGINEERING EXPRESS SHALL NOT BE HELD RESPONSIBLE OR LIABLE IN ANY WAY FOR ERRONEOUS OR INACCURATE DATA OR MEASUREMENTS. WORK SHALL BE FIELD VERIFIED PRIOR TO CONSTRUCTION. ENGINEERING EXPRESS SHALL BE NOTIFIED AND GIVEN AN OPPORTUNITY TO REEVALUATE OUR WORK UPON DISCOVERY OF ANY INACCURATE INFORMATION PRIOR TO MODIFICATION OF EXISTING FIELD CONDITIONS AND FABRICATION AND INSTALLATION OF MATERIALS.

ENGINEER SEAL AFFIXED HERETO VALIDATES STRUCTURAL DESIGN AS SHOWN ONLY. USE OF THIS SPECIFICATION BY CONTRACTOR, et. al. INDEMNIFIES & SAVES HARMLESS THIS ENGINEER FOR ALL COSTS & DAMAGES INCLUDING LEGAL FEES & APPELLATE FEES RESULTING FROM MATERIAL FABRICATION, SYSTEM ERECTION, & CONSTRUCTION PRACTICES BEYOND THAT WHICH IS CALLED FOR BY LOCAL, STATE, & FEDERAL CODES & FROM DEVIATIONS OF THIS PLAN. EXCEPT AS EXPRESSLY PROVIDED IN HEREIN, NO CERTIFICATIONS OR AFFIRMATIONS ARE INTENDED.

FRANK L. BENNARDO, P.E.
PE0040549
06/22/2012
VALID FOR (1) JOB ONLY
VALID ONLY WITH RAISED ENGINEER SEAL

LICENSED AFFILIATE OF
ENGINEERING EXPRESS®
160 SW 12th AVENUE, # 106
DEERFIELD BEACH, FL 33442
Ph: (954) 354-0660 Fax: (954) 354-0443
WWW.ENGEXP.COM
CERT. OF AUTH. # 1485

NEPTUNE BOAT LIFTS
100 SW 6th STREET
FORT LAUDERDALE, FL 33301
PHONE: (954) 524-3616 FAX: (954) 524-3604

ALUMINUM 4-POST STANDARD BOAT LIFT

REMARKS	DRWN	CHKD	DATE
INT ISSUE	TSB	FLB	04/24/05
REV FOR 2010 FBC	TSB	FLB	3-30-12

00-NBL-0002
SCALE: 01
PAGE DESCRIPTION:

1 of 3

06/22/2012 - 12:27pm DawnS F:\01 Project Files\Neptune Boat Lifts (NBL)\Mueller Plan Sheets\00-NBL-0002 4post Standard Lifts\4 Post Lift WPS_01a (2010 FBC).dwg

23

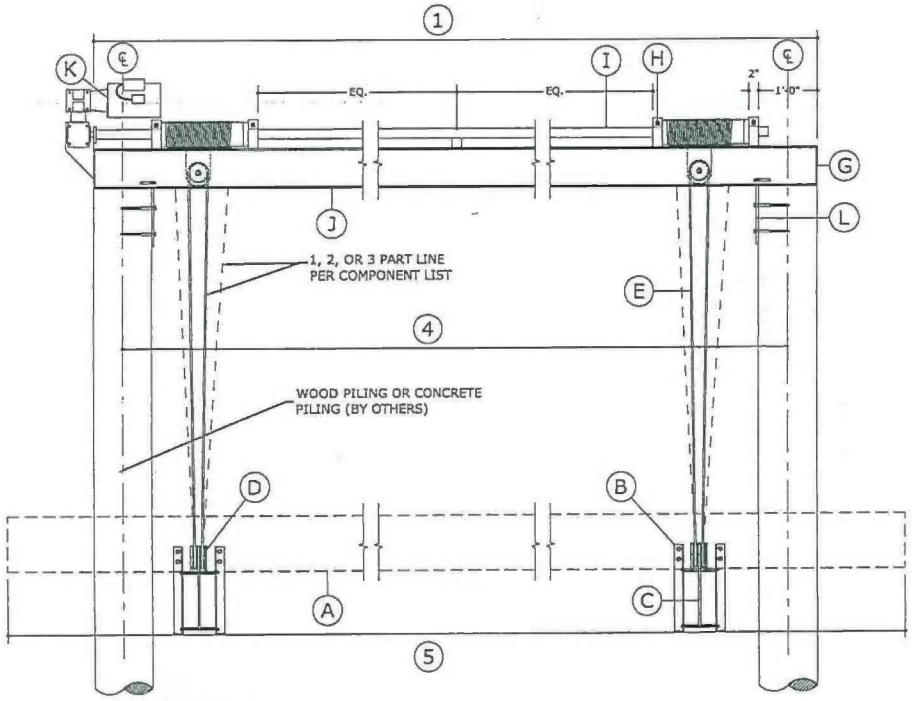

SECTION A
SCALE 1/2" = 1'-0"

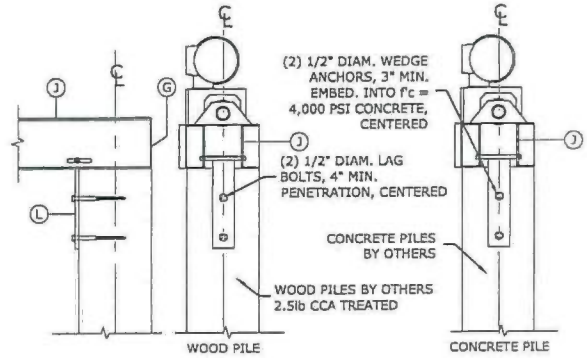

PILE MOUNTING DETAIL
SCALE ¾" = 1'-0"

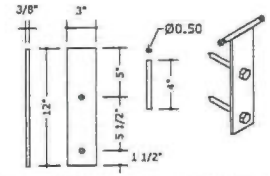

MOUNTING BRACKET DETAIL
SCALE 1" = 1'-0"

FRANK L. BENNARDO, P.E.
PE0078549
06/22/2012
VALID FOR (1) JOB(S) ONLY
VALID ONLY WITH RAISED ENGINEER SEAL

LICENSED AFFILIATE OF
ENGINEERING EXPRESS®
160 SW 12th AVENUE, #106
DEERFIELD BEACH, FL 33442
Ph: (954) 354-0650 Fax: (954) 354-0443
WWW.ENGEXP.COM
CERT OF AUTH #8185

NEPTUNE BOAT LIFTS
100 SW 6th STREET
FORT LAUDERDALE, FL 33301
PHONE: (954) 524-3616 FAX: (954) 524-3604

ALUMINUM 4-POST STANDARD BOAT LIFT

REMARKS	DRWN	CHKD	DATE
PRT SSUE	TSB	FLB	04/24/09
REV FOR 2010 FBC	TSB	FLB	3-30-12

00-NBL-0002
SCALE: 01
PAGE DESCRIPTION:

2 OF 3

06/22/2012 - 12:28pm DavidS F:\01 Project Files\Neptune Boat Lifts (NBL)\Master Plan Sheets\00-NBL-0002 4post Standard Lift\4 Post Lift MPS_01a (2010 FBC).dwg

3/4

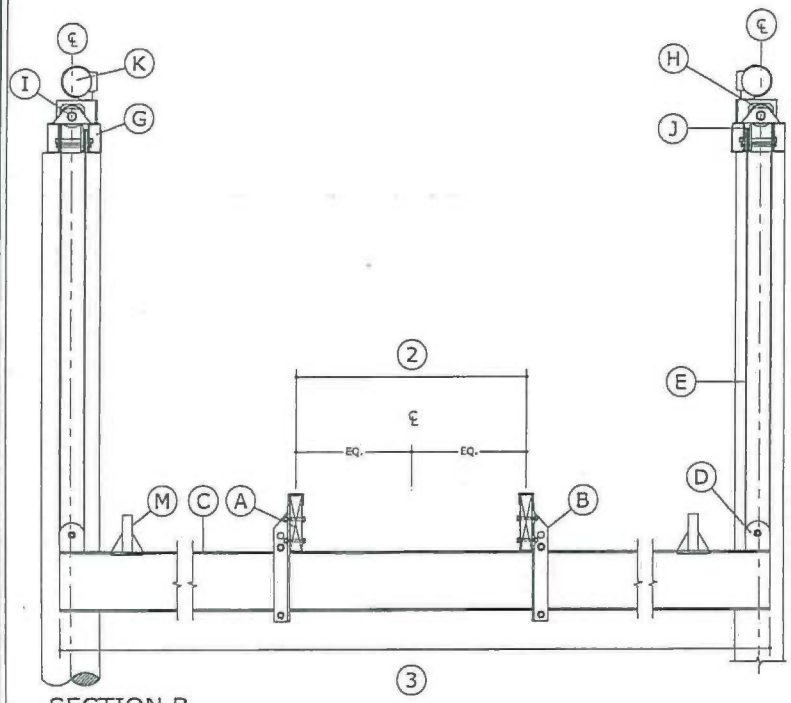

SECTION B
SCALE 1/2" = 1'-0"

LIST OF COMPONENTS

	LIFT CAPACITY (LB)	4,500	7,000	10,000	13,000	16,000	20,000	24,000
Ⓐ	BUNK	3"X8" PT SYP#1			3"X10" PT SYP#1			3"X12" PT SYP#1
Ⓑ	BUNK BRACKET SUPPORT	1/4"X2"X2"						
Ⓒ	LIFTER BEAM	AA I 6"X4.7		AA I 8"X6.3	AA I 8"X7.0	AA I 10"X10.3		AA I 12"X14.3
Ⓓ	SHEAVE PULLY PLATE	1/4"X4"X5" ANGLE						
Ⓔ	SS WIRE ROPE	5/16" 7X19 SS 304 (1 PART)		5/16" 7X19 SS 304 (2 PART)			5/16" 7X19 SS 304 (3 PART)	
Ⓕ	PILING MOUNT BRACKET	3/8"X3"X12" FLAT BAR						
Ⓖ	CARRIER BEAM END PLATE	1/4"X5" FLAT BAR		1/4"X6" FLAT BAR	1/4"X7" FLAT BAR		1/4"X8" FLAT BAR	
Ⓗ	DRIVE SHAFT BEARING BLOCK	2"X3" FLAT BAR						
Ⓘ	DRIVESHAFT	1-1/2" NOM. DIA. SH80 GALV PIPE						
Ⓙ	TOP CARRIER ASSEMBLY (2 C-CHANNELS PER ASSY)	AA CS 5"X2.2		AA CS 6"X2.8	AA CS 7"X3.2		AA CS 8"X4.3	AA CS 8"X5.6
Ⓚ	MOTOR AND GEAR BOX	ALUM. HOUSING						
Ⓛ	TOP CARRIER CONNECTOR	3/8"X3"X12" FLAT BAR						
Ⓜ	GUIDE POST SOCKET	2" NOM. DIA. SH80 ALUMN PIPE						

LIST OF DIMENSIONS

LIFT CAPACITY (LB)		4,500	7,000	10,000	13,000	16,000	20,000	24,000
DIMENSION MARK	①	150"	150"	150"	150"	150"	150"	192
	②	48"	48"	48"	48"	48"	48"	48"
	③	144"	144"	150"	150"	168"	168"	192"
	④	142"	142"	142"	142"	142"	142"	182"
	⑤	144"	144"	144"	144"	144"	168"	216"

FRANK L. BENNARDO, P.E.
PE0046549
06/22/2012
VALID FOR (1) COPY ONLY
VALID ONLY WITH RAISED ENGINEER SEAL
LICENSED AFFILIATE OF
ENGINEERING EXPRESS®
160 SW 12th AVENUE #106
DEERFIELD BEACH, FL 33442
PH: (954) 354-0660 FAX: (954) 354-0443
WWW.ENGEXP.COM
CERT OF AUTH #8885

NEPTUNE BOAT LIFTS
100 SW 6th STREET
FORT LAUDERDALE, FL 33301
PHONE: (954) 524-3616 FAX: (954) 524-3604

ALUMINUM 4-POST STANDARD BOAT LIFT

REMARKS	DRWN	CHKD	DATE
ORIT ISSUE	TSB	FLB	04/24/09
REV FOR 2010 FBC	TSB	FLB	3-30-12

00-NBL-0002
SCALE: 01
PAGE DESCRIPTION:

3

25

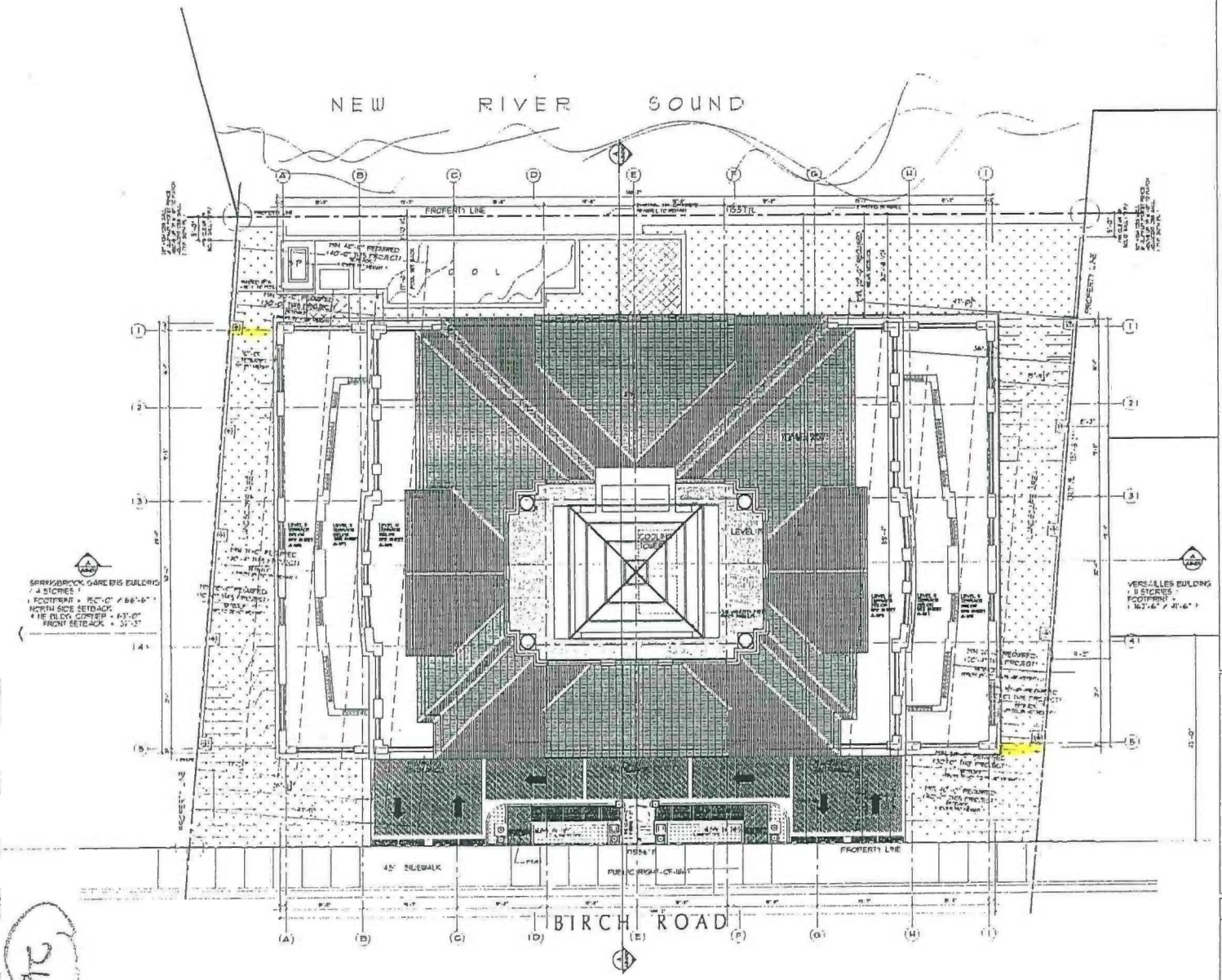

THE SCOPE OF WORK ON THIS SHEET IS BOUND BY GENERAL REQUIREMENTS OF SHEET A-095

NORTH

SITE PLAN

SCALE : 1" = 10'-0"

PROJECT: ALHAMBRA PLACE

SITE DATA

ADDRESS	209 N. BIRCH ROAD, FORT LAUDERDALE, FLORIDA, 33304
ZONING	IOA
BUILDING USE	RESIDENTIAL
CONSTRUCTION	TYPE – 1
SITE AREA IN SQUARE FEET	23,033 SQ. FT.
SITE AREA IN ACRES	.528 ACRES

		PROVIDED
BUILDING COVERAGE (148'-2" x 89'-4")	57.2 %	13,235 SF
DRIVES, PARKING, WALKS, POOL	17.4 %	4,050 SF
TOTAL SITE COVERAGE	74.6 %	17,285 SF
REQUIRED LANDSCAPED AREA	25 %	5,758 SF
LANDSCAPED (PERVIOUS) AREA PROVIDED	25.3 %	5,838 SF

F. A. R. = A / C TOTAL AREA / SITE AREA = 97,837 SQ. FT. / 23,033 SQ. FT. = 4.21

BUILDING SETBACKS

	REQUIRED	PROVIDED
FRONT :	20'	20'-8 1/2"
REAR :	20'	21'-4 1/2"
SIDES :	10' (UP TO A HEIGHT OF 35')	VARIES FROM 10' TO 17'-2"
	20' (FROM HEIGHT OF 35' TO 75')	MINIMUM 20'-3"
	30' (FROM HEIGHT OF 75' TO 115')	MINIMUM 30'-0"
	40' (FOR HEIGHT OVER 115')	MINIMUM 40'-0"

	MAX	PROVIDED
BUILDING HEIGHT	150'	150'

BUILDING DATA

LEVELS	# OF LEVELS UNITS/FLOOR		TOTAL UNITS	DESCRIPTION	GROSS FLOOR AREA	GROSS TOTAL AREA
1	1	0	0	PARKING/ LOBBY	13,235 S.F.	13,235 S.F.
2-3	2	0	0	PARKING(2) PARKING ST'W (3)	13,235 S.F.	26,470 S.F.
4	1	4	4	2-3BR(3-1/2BATH)UNIT 2-2BR+DEN(3-1/2BATH)UNIT	13,235 S.F.	13,235 S.F.
5-8	4	2	8	3BR+DEN(3-1/2BATH)UNIT	11,077 S.F.	44,308 S.F.
9-13	4	2	8	3BR+DEN(3-1/2BATH)UNIT	9,677 S.F.	38,708 S.F.
14-18	3	1	3	4BR+DEN(3-1/2BATH)UNIT	7,858 S.F.	23,574 S.F.
TOTALS	18	–	73	–	–	159,530 S.F.

PARKING DATA

TOTAL UNITS	DESCRIPTION	PARKING FACTOR/UNIT	PARKING REQUIRED
4	3 BR UNITS	2.1	8.4
19	4 BR UNITS	2.2	41.8
TOTAL			51 (3 HC)
TOTAL PARKING PROVIDED			58 (3 HC)

LEGAL DESCRIPTION

THE NORTH ONE-HALF OF LOT 5 AND ALL OF LOTS 6, 7, AND 8, BLOCK 10, LAUDER DEL MAR, ACCORDING TO THE PLAT THEREOF, AS RECORDED IN PLAT BOOK 2, PAGE 30, OF THE PUBLIC RECORDS OF BROWARD COUNTY, FLORIDA.

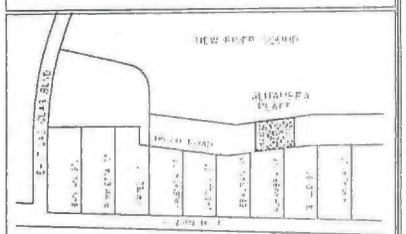

LOCATION MAP

ATLANTIC OCEAN N.T.S.

MATERIALS AND COLORS FOR ALL STRUCTURES

1) :– ROOF TRELLIS AND ALL EXTERIOR ALUMINUM SURFACES
COLOR – LIGHT GREEN
2) :– SIMULATED BARREL TILE METAL ROOF
COLOR – TERRACOTTA
3) :– STUCCO EXTERIOR WALLS (FROM LEVEL 5 UP)
COLOR – LIGHT PEACH
4) :– STUCCO EXTERIOR BASE WALLS (FROM LEVELS ONE THROUGH 4)
COLOR – DARK BOISE
5) :– HORIZONTAL LINES (REVEALS)
COLOR – MEDIUM GRAY
6) :– ORNAMENTS (CORNICES, ARCHES)
(PRECAST SIMULATED KEYSTONE/ ST
COLOR – LIGHT BEIGE

"BELLY" BALCONY RAILINGS, EXTERIOR HANDRAILS AND WINDOW/DOOR FRAMES

Luis O. Revuelta Architecture Interior Design Planning
CRS SW 73RD AVE.
Miami
FL 33155
(305) 265-0995
(FAX) 265-9733

Seal

Consultants

Project Designer
Luis O. Revuelta
LORPA

Project Owner

LUIS O. REVUELTA P.A.

ALHAMBRA PLACE
FORT LAUDERDALE, BROWARD COUNTY, FLORIDA

Revisions

11/20/99

Date Of Issue
12/10/99

Drawn By
MRSQUIER

Checked By
LOR

Scale
AS SHOWN

Job Number
9702

Sheet Number
A-100

Boat Lift request for Hank Hury and James Cross
209 N. Birch Rd. #1202
Fort Lauderdale, FL 33304

Table of Contents

Proposed lift: Neptune 24,000 lb., 4 post

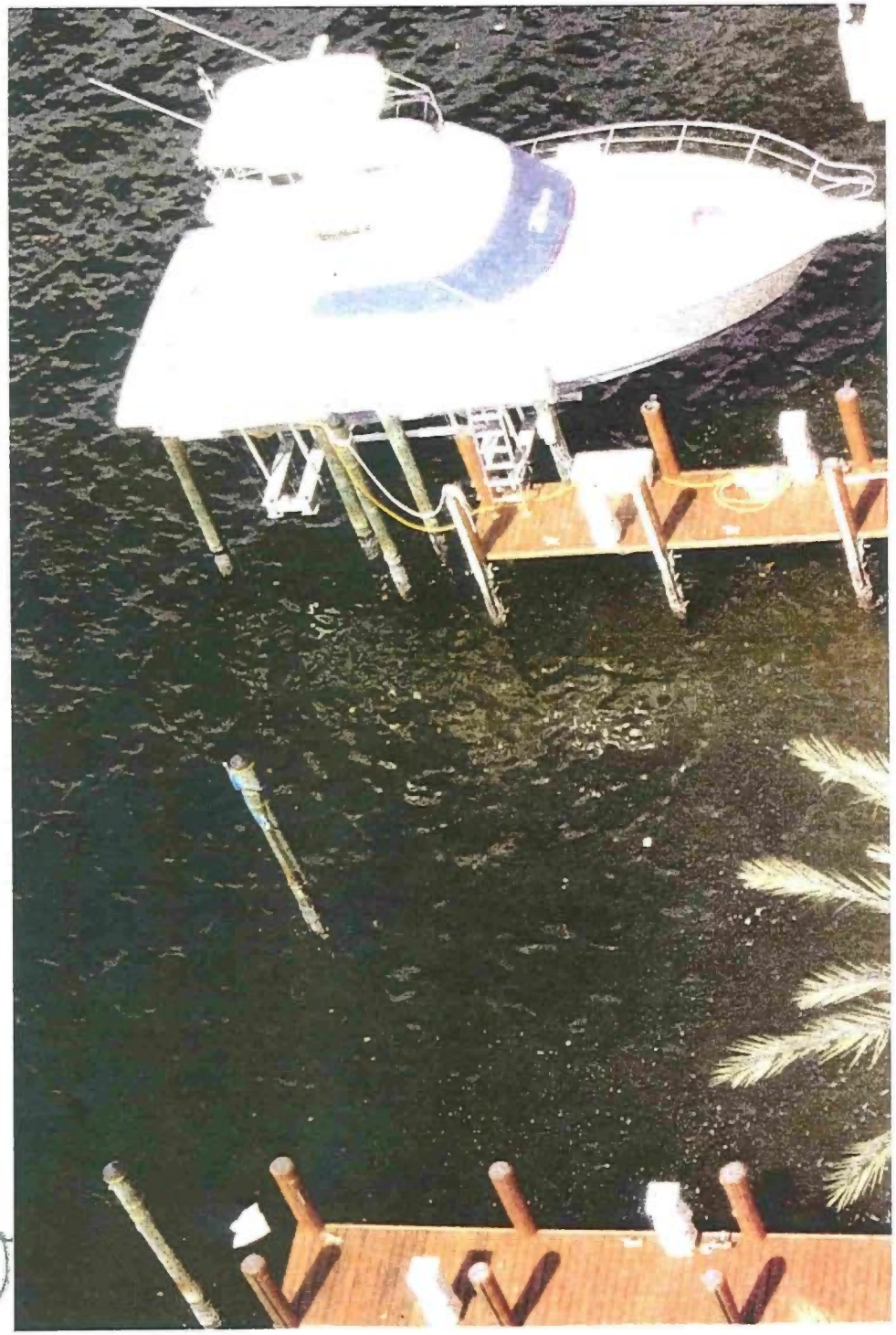

Existing lift, 8 post

Trash collects in front of our pool and boatslips due to the bend in the intracoastal waterway

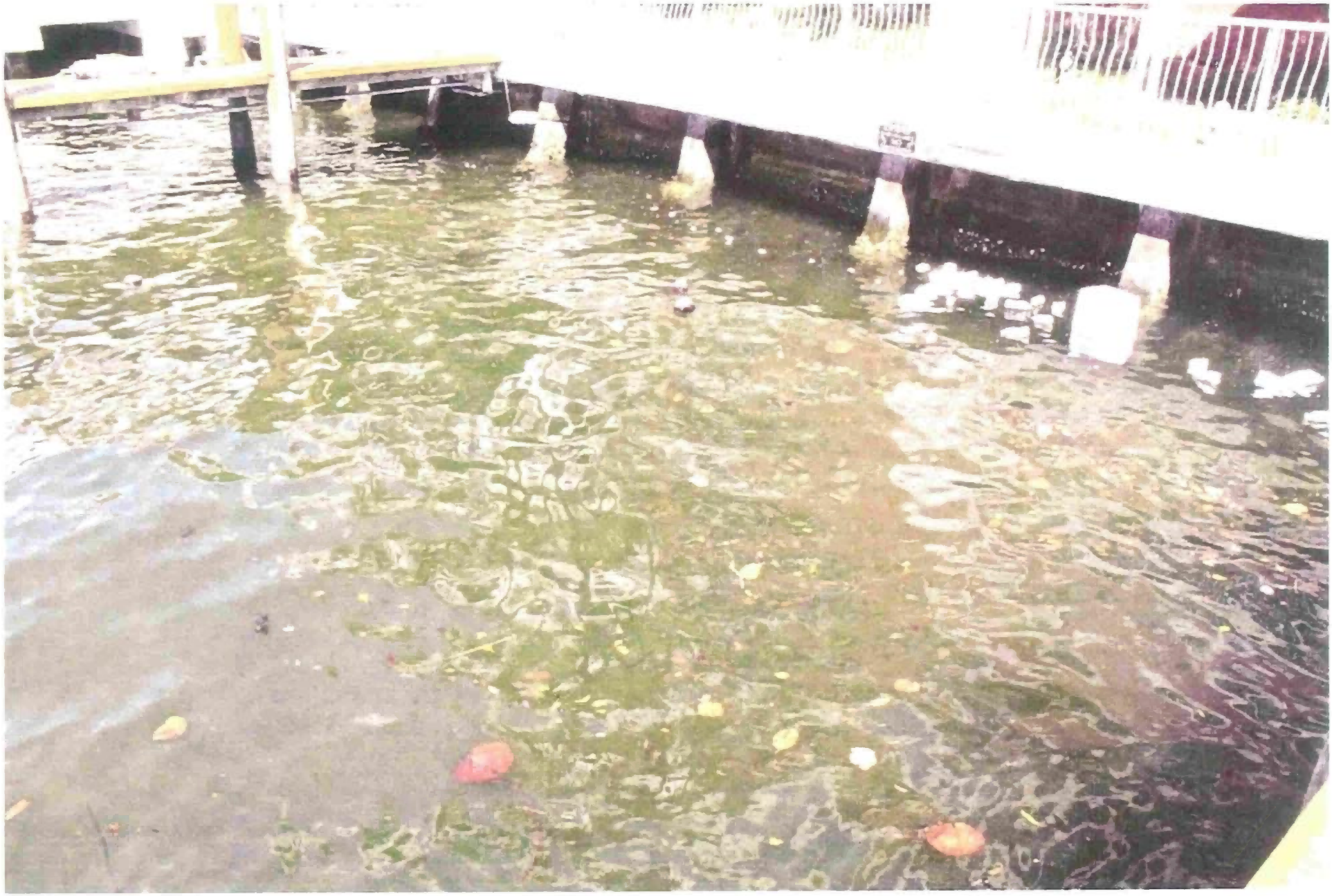

Having a boat sit in this type of trash and petroleum sheen is not good for the hull and can clog water intakes on the vessel

The submerged sandbar between our slips and the channel
helps to direct trash toward our bulkhead

Aerial showing bend in the intracoastal. Slip #3 is noted by arrow

Speeding boat directly across from our slip casting large wake

Water taxi passing close by on its way to Seville St.

View of the four slips from above.

View west across the intracoastal from our slip

View of our building from the intracoastal.
Arrow points toward out slip #3

View to the north from above

View to the north from waterline

View to the south from above

View to the south at waterline

Environmental Protection and Growth Management Department
PLANNING AND ENVIRONMENTAL REGULATION DIVISION
1 North University Drive, Suite 102-A • Plantation, Florida 33324 • 954-357-6666 • FAX 954-357-6521 • 954-519-1412

BROWARD COUNTY
PLANNING & ENVIRONMENTAL REGULATION
ENVIRONMENTAL RESOURCE GENERAL LICENSE
No: FTL1301-010
Broward County Code 27-336(a)(1)(f)
Applicant: Hank Hury
Description: Install boatlift

Issue Date: 1/8/13
NOT VALID FOR MORE THAN TWO (2) YEARS

The above project has been reviewed and was verified to meet the criteria outlined in Chapter 27-336(a) (1) of the Broward County Natural Resource Protection Code for the issuance of this Environmental Resource General License (GL). This approval is specific for the plans and description described on this verification. Any changes to project footprint, design or size must be reviewed by this Department and may require additional licensing.

Construction shall be in accordance with the submitted Application, the approved plans and the attached General Conditions. **This approval does not authorize impacts to natural resources (mangroves, sea grasses, etc.).** Failure to comply with the license conditions may result in suspension or revocation of the license and/or enforcement actions.

Issuance of this license does not relieve the licensee from obtaining any other required federal, state or local permits or authorizations required for this project prior to commencement.

Per Section 27-58(b)(9), "The licensee, by acceptance of this license, specifically agrees to allow access and shall allow access to the licensed source, activity, or facility at times to the COUNTY personnel for the purposes of inspection and testing to determine compliance with this license and this chapter."

Aquatic & Wetland Resources Reviewer: Linda Sunderland

Telephone: 954-519-1454 **email:** lsunderland@broward.org

GENERAL CONDITIONS: **GL # FTL1301-010**

1. The terms, conditions, requirements, limitations and restrictions set forth herein are accepted by the licensee and enforceable by EPGMD pursuant to this chapter. EPGMD will review this license periodically and may revoke the license, initiate administrative and/or judicial action for any violation of the conditions by the licensee, its agents, employees, servants or representatives or principals.
2. This license is valid only for the specific uses set forth in the license application, and any deviation from the approved uses may constitute grounds for revocation and enforcement action by EPGMD.
3. In the event the licensee is temporarily unable to comply with any of the conditions of the license, the licensee shall notify EPGMD within twelve (12) hours. Within five (5) working days of the event, the licensee shall submit a written report to EPGMD that describes the incident, its cause, the measures being taken to correct the problem and prevent its reoccurrence, the owner's intention toward repair, replacement, and reconstruction of destroyed facilities, and a schedule of action leading toward operation within the license conditions.
4. The issuance of this license does not convey any vested rights or exclusive privileges, nor does it authorize any injury to public or private property or any invasion of personal rights, or any violations of federal, state or local laws or regulations.
5. This license must be available for inspection on the licensee's premises during the entire life of the license.
6. By accepting this license, the licensee understands and agrees that all records, notes, monitoring data and other information relating to the construction or operation of this permitted source, that are submitted to EPGMD, may be used by EPGMD as evidence in any enforcement proceeding arising under Chapter 27, except where such use is prohibited by § 403.111, F.S.
7. The licensee agrees to comply with Chapter 27, as amended.
8. Any new owner of a licensed facility shall apply by letter for a transfer of license within thirty (30) days after sale or legal transfer. The transferor shall remain liable for performance in accordance with the license until the transferee applies for, and is granted the transfer of license. The transferee shall also be liable for performance in accordance with the license.
9. The licensee, by acceptance of this license, specifically agrees to allow access to the licensed source at reasonable times by EPGMD personnel for the purposes of inspection and testing to determine compliance with this license and this Chapter 27.
10. This license does not constitute a waiver or approval of any other license that may be required for other aspects of the total project.
11. If the licensee wishes to renew a license or extend its term, the licensee shall make application sixty (60) days prior to its expiration. Expired licenses are not renewable.
12. In addition to the general conditions set forth above, each license issued by EPGMD shall contain specific conditions determined by site conditions and requirements pursuant to the regulations as determined by the director of EPGMD. The licensee agrees that specific conditions are enforceable by EPGMD for any violation thereof.
13. Enforcement of the terms and provisions of this license shall be at the reasonable discretion of EPD, and any forbearance on behalf of EPD to exercise its rights hereunder in the event of any breach by the licensee, shall not be deemed or construed to be a waiver of EPD's rights hereunder.

EXISTING CONDITIONS

SCALE: 1" = 50'-0"

SKETCH OF SURVEY

BOUNDARY SURVEY & SITE PLAN (PROPOSED FACILITIES)

LEGAL DESCRIPTION

The south one-half (S 1/2) of lot 5 and all of lots 6, 7, and 8, Block 10, LAUDER DEL MAR, Plat Book 2, page 30, Fort Lauderdale, Broward County, Florida.

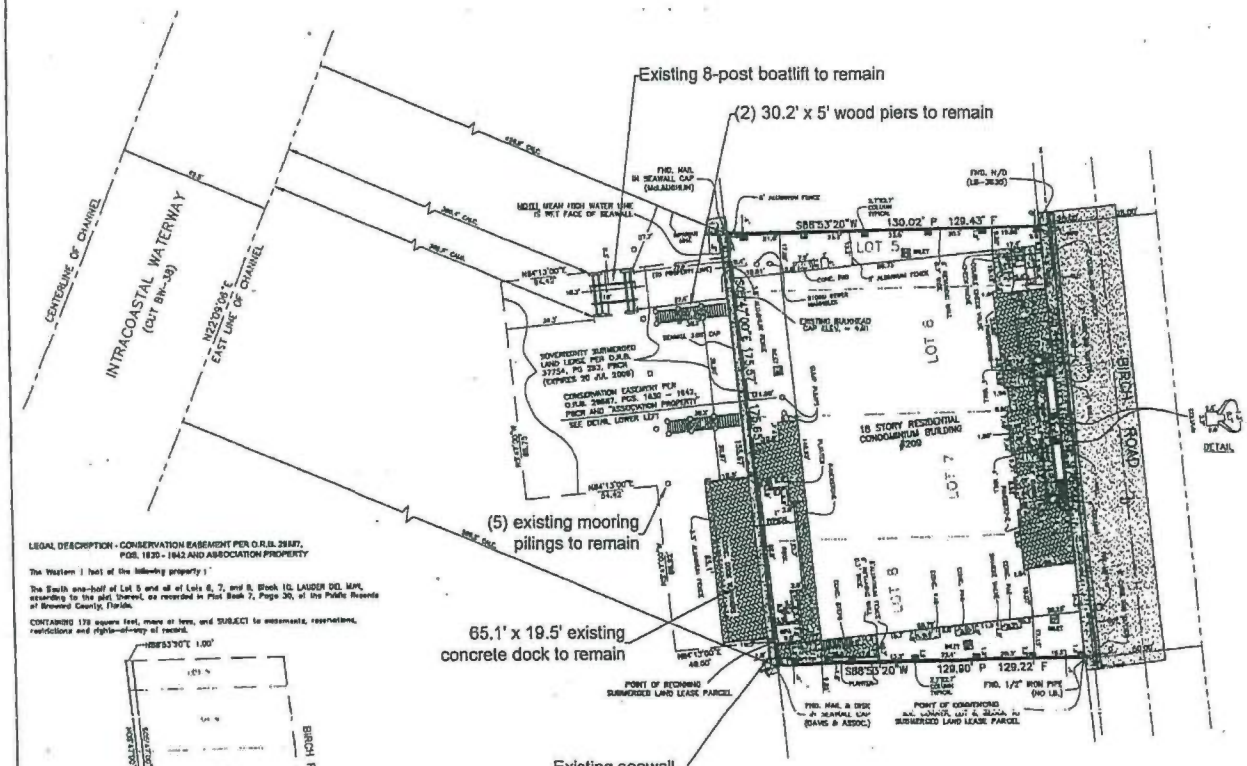

LEGAL DESCRIPTION - CONSERVATION EASEMENT PER O.R.B. 29687, PGS. 1830 - 1842 AND ASSOCIATION PROPERTY

The Western 1 foot of the following property:

The South one-half of Lot 5 and all of Lots 6, 7, and 8, Block 10, LAUDER DEL MAR, according to the plat thereof, as recorded in Plat Book 2, Page 30, of the Public Records of Broward County, Florida.

CONTAINING 178 square feet, more or less, and SUBJECT to easements, reservations, restrictions and rights-of-way of record.

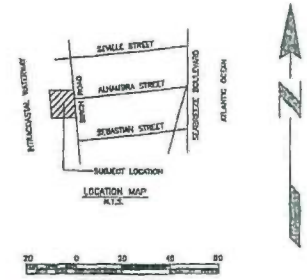

LOCATION MAP
N.T.S.

GRAPHIC SCALE IN FEET
SCALE: 1" = 20'

SECTION 1, TOWNSHIP 50 SOUTH, RANGE 42 EAST

LEGEND

FND	= Found	C	= Centerline
IR	= Iron Rod	WF	= Wood Fence
IP	= Iron Pipe	CLF	= Chain Link Fence
PC	= Plastic Cap	PL	= Planter
N/C	= Nail and Cap	WP	= Wood Pole
N/D	= Nail and Disc	CP	= Concrete Pole
E	= Easement	LP	= Light Pole
U	= Utility	OHE	= Overhead Electric
D	= Drainage	BLDG	= Building
P	= Plat	CBS	= Concrete Block and Stucco
F	= Field	FH	= Fire Hydrant
BM	= Benchmark	WPP	= Wood Power Pole
ELEV	= Elevation	PG	= Page
R	= Radius	MH	= Manhole
L	= Arc Length	CV	= Concrete Monument
Δ	= Central Angle	FPL	= Florida Power & Light
CHB	= Chord Bearing	ORB	= Official Records Book
ST LT	= Street Light	PBCR	= Palm Beach County Records
CONC	= Concrete		

SURVEY NOTES:

-ELEVATIONS SHOWN HEREON ARE BASED ON THE NATIONAL GEODETIC VERTICAL DATUM OF 1929.

-PARCEL AREA = 22,741 SQUARE FEET

-BEARING BASIS IS PLAT BEARING ALONG THE EAST LINE OF LOTS 5, 6, 7 AND 8, BLOCK 10, LAUDER DEL MAR, OF S 05°14'40" E.

-LEGAL DESCRIPTION FURNISHED BY CLIENT.

-BENCHMARK REFERENCE : NORTHWEST BOLT ON FIRE HYDRANT AT SOUTHEAST CORNER OF BIRCH ROAD AND ALHAMBRA STREET ELEVATION=8.81

-NO TITLE OPINION OR ABSTRACT HAS BEEN PROVIDED. NO SEARCH OF THE PUBLIC RECORDS HAS BEEN MADE BY THE SURVEYOR. THERE MAY BE DEEDS, EASEMENTS, OR OTHER INSTRUMENTS, EITHER RECORDED OR UNRECORDED, WHICH MAY AFFECT THE SUBJECT PROPERTY.

-BOAT LIFT AS SHOWN BASED ON CAD FILE PROVIDED FROM CLIENT (209 LEASE.DWG).

BOUNDARY SURVEY for: ALHAMBRA PLACE CONDOMINIUM ASSOCIATION, INC.

I HEREBY CERTIFY: This sketch of survey of the above described property is true and correct to the best of my knowledge and belief as recently surveyed under my direction, and conforms to the minimum technical standards as set forth by the Florida Board of Professional Land Surveyors in Chapter 61G17, Florida Administrative Code, pursuant to Section 472.027, Florida Statutes.

3/23/09

SCOTT A. RUSS
Registered Land Surveyor No. 6258
State of Florida

Not valid Without the Signature And the Original Raised Seal Of A Florida Licensed Surveyor And Mapper

FIELD BOOK 756, PAGE 58; FIELD BOOK 782, PAGES 41 - 45

NO	REVISION	BY	DATE
4	UPDATE SVY & ADD PROPOSED BOAT LIFT	PL	3/23/09
3	Update Survey FB 782/41-45	PL	2/18/09
2	Update Survey	JGH	3/26/02
1	Revise per attorney's comments dated 8-1-01	LJR	8-3-01

SURVEY OF PROPERTY DESCRIBED HEREON

ALHAMBRA PLACE
A CONDOMINIUM
FORT LAUDERDALE, FLORIDA

JOHN A. GRANT, JR., INC.
CONSULTING ENGINEERS
3333 NORTH FEDERAL HIGHWAY
BOCA RATON, FLORIDA 33431
PH. NO. 561-392-3333 FAX NO. 561-395-3315
LICENSED BUSINESS NO. LB 30

MADE	JGH	DATE 2-28-01	MADE		DATE
CHECKED	JRG	DATE 2-27-01	SCALE	1" = 50'	
JOB NO.	02-180-0180		SHEET	1 OF 1	

PROPOSED CONDITIONS
SCALE:1" = 50'-0"

SKETCH OF SURVEY
BOUNDARY SURVEY & SITE PLAN (PROPOSED FACILITIES)

LEGAL DESCRIPTION

The south one-half (S 1/2) of lot 5 and all of lots 6, 7, and 8, Block 10, LAUDER DEL MAR, Plat Book 2, page 30, Fort Lauderdale, Broward County, Florida.

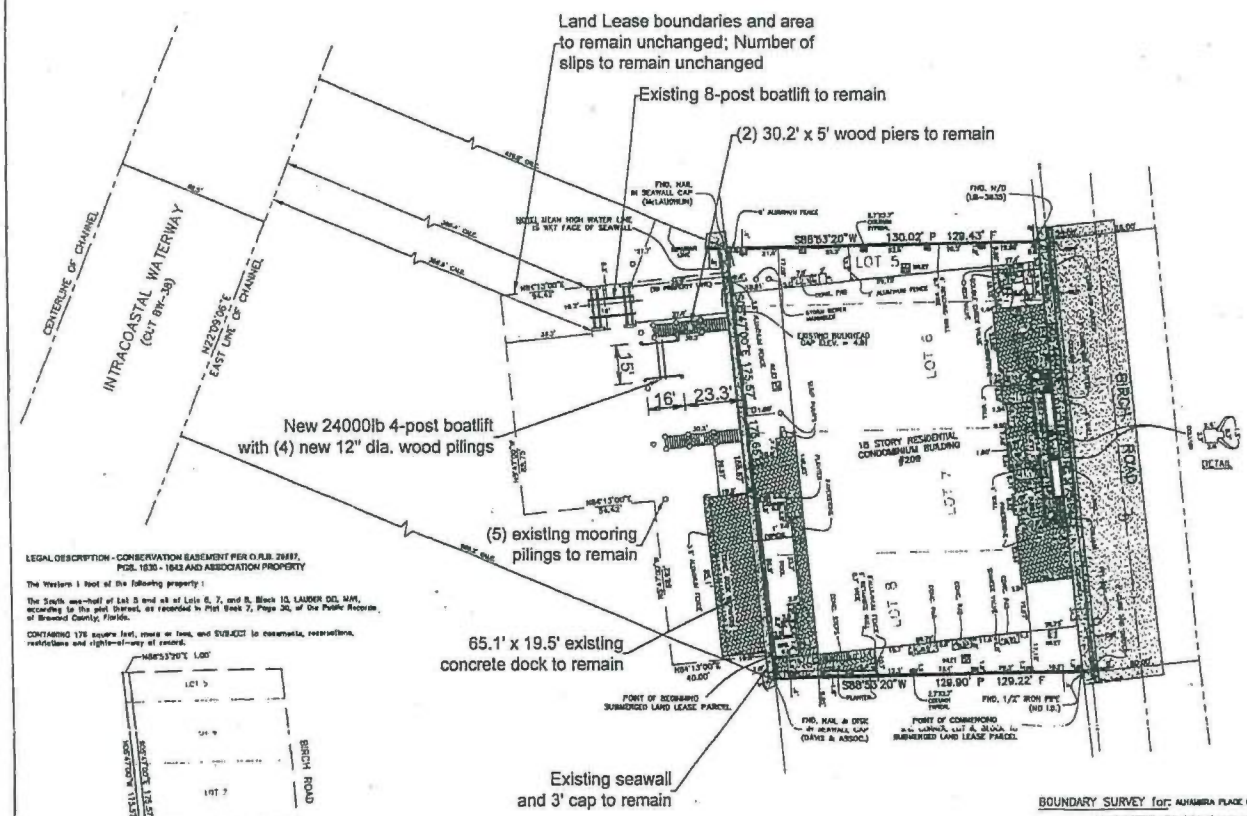

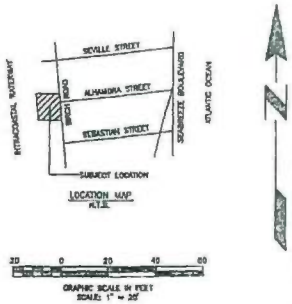

SECTION 1, TOWNSHIP 50 SOUTH, RANGE 42 EAST

LEGEND

FND	= Found	⊕	= Centerline
IR	= Iron Rod	W/F	= Wood Fence
IP	= Iron Pipe	C/F	= Chain Link Fence
PC	= Plastic Cap	PL	= Plaster
N/C	= Nail and Cap	W/P	= Wood Pole
N/D	= Nail and Disc	C/P	= Concrete Pole
E	= Easement	L/P	= Light Pole
U	= Utility	OHE	= Overhead Electric
D	= Drainage	BLDG	= Building
P	= Plat	CBS	= Concrete Block and Stucco
F	= Field	FH	= Fire Hydrant
BM	= Benchmark	W/P	= Wood Power Pole
ELEV	= Elevation	PG	= Page
R	= Radius	BM	= Bollards
L	= Arc Length	CM	= Concrete Monument
Δ	= Central Angle	FPL	= Florida Power & Light
CHB	= Chord Bearing	ORB	= Official Records Book
ST LT	= Street Light	PBCR	= Palm Beach County Records
CONC	= Concrete		

SURVEY NOTES:

-ELEVATIONS SHOWN HEREON ARE BASED ON THE NATIONAL GEODETIC VERTICAL DATUM OF 1929.

-PARCEL AREA = 22,741 SQUARE FEET

-BEARING BASIS IS PLAT BEARING ALONG THE EAST LINE OF LOTS 5, 6, 7 AND 8, BLOCK 10, LAUDER DEL MAR, OF S 05°44'40" E.

-LEGAL DESCRIPTION FURNISHED BY CLIENT.

-BENCHMARK REFERENCE : NORTHWEST BOLT ON FIRE HYDRANT AT SOUTHEAST CORNER OF BIRCH ROAD AND ALHAMBRA STREET ELEVATION=6.81

-NO TITLE OPINION OR ABSTRACT HAS BEEN PROVIDED. NO SEARCH OF THE PUBLIC RECORDS HAS BEEN MADE BY THE SURVEYOR. THERE MAY BE DEEDS, EASEMENTS, OR OTHER INSTRUMENTS, OTHER RECORDED OR UNRECORDED, WHICH MAY AFFECT THE SUBJECT PROPERTY.

-BOAT LIFT AS SHOWN BASED ON CAD FILE PROVIDED FROM CLIENT (209 LEASE.DWG).

LEGAL DESCRIPTION - CONSERVATION EASEMENT PER O.R.B. 28887, PGS. 1830 - 1842 AND ASSOCIATION PROPERTY

The Western 1 foot of the following property:

The South one-half of Lot 5 and all of Lots 6, 7, and 8, Block 10, LAUDER DEL MAR, according to the plat thereof, as recorded in Plat Book 2, Page 30, of the Public Records of Broward County, Florida.

CONTAINING 178 square feet, more or less, and SUBJECT to easements, reservations, restrictions and rights-of-way of record.

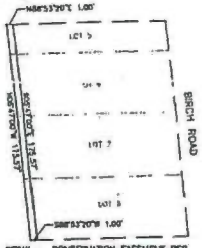

DETAIL - CONSERVATION EASEMENT PER O.R.B. 28887, PGS. 1830 - 1842 AND "ASSOCIATION PROPERTY"
NOT TO SCALE

NO.	REVISION	BY	DATE
4	UPDATE SVY & ADD PROPOSED BOAT LIFT	RL	4/25/09
3	Update Survey FB 782/43-45	RL	3/18/09
2	Update Survey	JCH	1/28/02
1	Revise per attorney's comments dated 8-1-01	LJR	8-7-01

SURVEY OF PROPERTY DESCRIBED HEREON

ALHAMBRA PLACE
A CONDOMINIUM
FORT LAUDERDALE, FLORIDA

JOHN A. GRANT, JR., INC.
CONSULTING ENGINEERS
3132 NORTH FEDERAL HIGHWAY
BOCA RATON, FLORIDA 33431
PH. NO. 561-395-3333 FAX NO. 561-395-3315
LICENSED BUSINESS NO. LB 80

MADE JCH/JR DATE 2-28-01 TRACED ——— DATE ———
CHECKED JCG DATE 2-27-01 SCALE 1" = 20'
JOB NO. 00-196-0158 SHEET 1 OF 1

BOUNDARY SURVEY for: ALHAMBRA PLACE CONDOMINIUM ASSOCIATION, INC.

I HEREBY CERTIFY : This sketch of survey of the above described property is true and correct to the best of my knowledge and belief as recently surveyed under my direction, and conforms to the minimum technical standards as set forth by the Florida Board of Professional Land Surveyors in Chapter 61G17, Florida Administrative Code, pursuant to Section 472.027, Florida Statute.

3/23/09
SCOTT A. GOD
Registered Land Surveyor No. 5236
State of Florida

FIELD BOOK 759, PAGE 39; FIELD BOOK 782, PAGES 41 - 45

BROWARD COUNTY
PLANNING & ENVIRONMENTAL
REGULATION DIVISION
GENERAL LICENSE
NO. FILI 301-010
BROWARD COUNTY CODE 27-336(a) (1) f
PROJECT Boatlift
REVIEWER LTS DATE 1/8/13
NOT VALID FOR MORE THAN 2 YEARS

47

ALUMINUM 4-POST STANDARD BOAT LIFTS

BY NEPTUNE BOAT LIFT

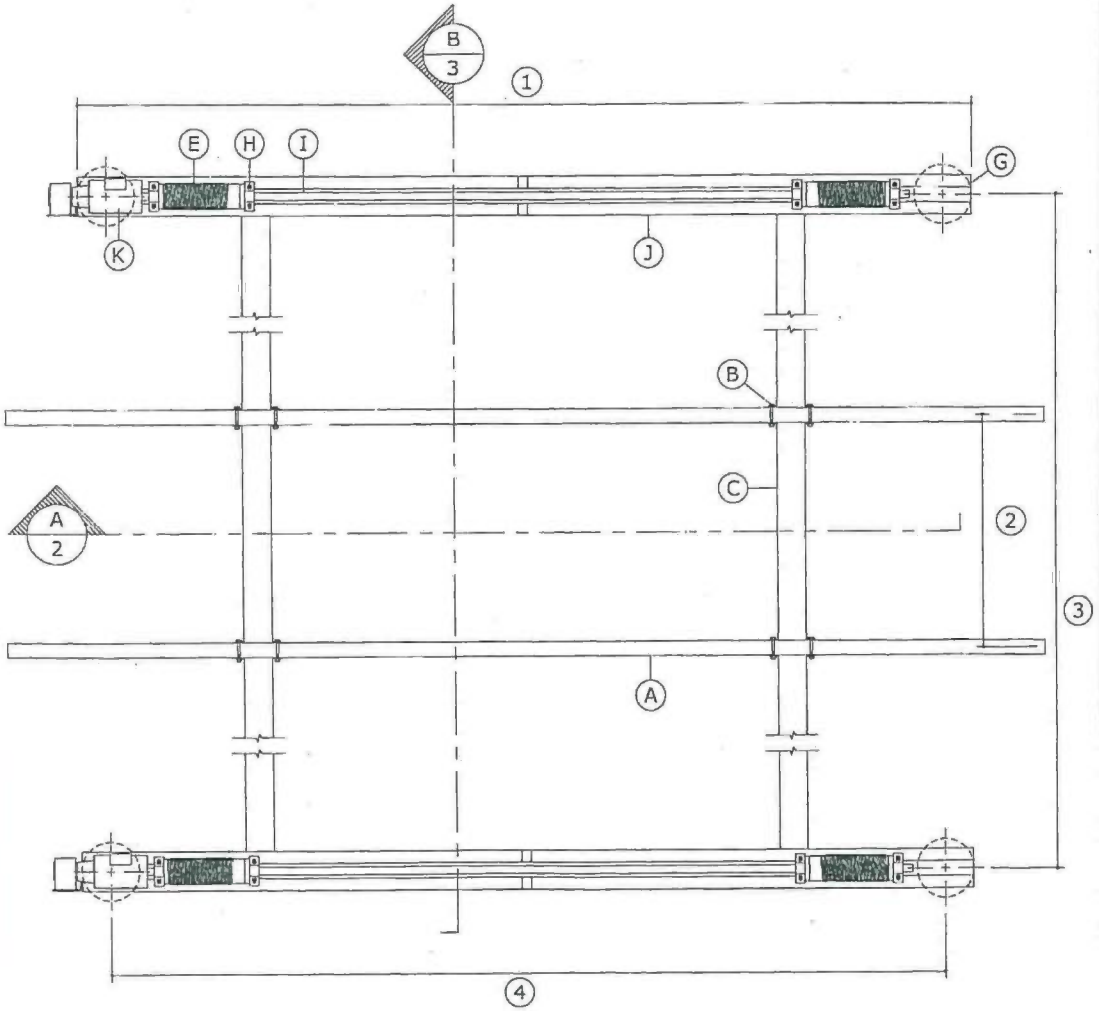

PLAN VIEW

SCALE 1/2" = 1'-0"

STRUCTURAL NOTES:

THE WORK SPECIFIED HEREIN HAS BEEN DESIGNED & ALL WORK SHALL BE IN ACCORDANCE WITH THE STRUCTURAL PROVISIONS OF THE 2010 FLORIDA BUILDING CODE.

NOTE:
THIS LIFTING STRUCTURE HAS BEEN DESIGNED TO WITHSTAND WIND LOADS ASSOCIATED WITH SPEEDS OF V_{ult} = 175 MPH, V_{ASD} = 136 MPH (3 SEC GUST) EXPOSURE 'D' WITHOUT A BOAT ON THE LIFT PER ASCE 7-10 USING ABOVE GROUND SIGN/WALL METHOD. THE LIFTING STRUCTURE INCLUDING BOAT HAS BEEN DESIGNED TO WITHSTAND WIND SPEEDS OF V_{ult} = 90 MPH IN EXPOSURE 'C' OR 70 MPH IN EXPOSURE 'D'.

THE OWNER IS RESPONSIBLE TO REMOVE BOAT FROM LIFT DURING WINDSTORM EVENT IN EXCESS OF Vasd AS CALCULATED BELOW. PER FBC 3105.5.3 STRUCTURES DESIGNED TO BE READILY REMOVED OR REPOSITIONED DURING PERIODS OF HIGH WIND VELOCITY SHALL BE POSTED WITH A LEGIBLE AND READILY VISIBLE DECAL OR PAINTED INSTRUCTIONS TO THE OWNER OR TENANT TO REMOVE OR REPOSITION THE STRUCTURE OR PART THEREOF DURING SUCH PERIODS OF TIME AS ARE DESIGNATED BY THE U.S.WEATHER BUREAU AS BEING A HURRICANE WARNING OR ALERT. THE LIFT OWNER SHALL BE NOTIFIED OF THESE CONDITIONS BY THE PERMIT HOLDER. NO WARRANTY,EXPRESSED OR IMPLIED, IS CONTAINED HEREIN. Vasd MAY BE CALCULATED BY THE FOLLOWING FORMULA: Vasd = √0.6 * Vult. DESIGN OF BOAT WIND LOADING HAS BEEN PERFORMED WITH THE FOLLOWING RATIOS AS CONFIRMED BY OTHERS: B/s=1.92, s/h = 1.00, FOR A Cf of 1.4 MAXIMUM WHERE H IS THE HEIGHT TO TOP OF BOAT, B IS HORIZONTAL DIMENSION, AND S IS VERTICAL DIMENSION.

CERTIFICATION OF BOAT LIFT TO EXISTING STRUCTURE AND ALL ELECTRICAL OR MECHANICAL CERTIFICATIONS ARE BY OTHERS; ENGINEER SEAL CERTIFIES ASSEMBLY OF LIFT ONLY.
THIS DETAIL IS PREPARED AS A GENERAL NON-SITE SPECIFIC MASTER PLAN SHEET DETAIL. TYPICAL FIELD CONDITIONS ARE ASSUMED IN THE DESIGN. WOOD PILES SHALL BE SEASONED SEALED WOOD WITH G=0.55 OR BETTER. SHOULD ANY SPECIFIC LOCATION DIFFER FROM THAT SPECIFIED HEREIN, OR STANDARD FIELD CONDITIONS, ADDITIONAL SPECIFIC ENGINEERING MAY BE REQUIRED AS DETERMINED BY THE BUILDING INSPECTOR AND PERMITTING CONTRACTOR. CARE SHALL BE TAKEN BY CONTRACTOR IN ALL APPLICATIONS OF THIS DETAIL. AS THIS IS NOT A SITE SPECIFIC DRAWING, IT IS THE RESPONSIBILITY OF OTHERS TO ENSURE THE INTEGRITY OF INSTALLATION TO THE HOST STRUCTURE.

ALUMINUM
MATERIAL: 6061 T6 ALUMINUM
ALL WELDS ARE MIN. 1/4" FULL FILLET WELD USING 5556 FILLER ALLOY. ALL WELDING MUST CONFORM TO AISC STEEL CONSTRUCTION MANUAL 13TH ED AS INSPECTED AND VERIFIED BY OTHERS. THE CONTRACTOR IS RESPONSIBLE TO INSULATE ALUMINUM MEMBERS FROM DISSIMILAR METALS TO PREVENT ELECTROLYSIS.

FASTENERS:
ALL ANCHORS TO BE HILTI BRAND OR MFR EQUIVALENT . ALL BOLTS SHALL BE HOT DIPPED GALVANIZED, OR STAINLESS STEEL & MEET THE REQUIREMENTS OF ASTM A304 WITH HARDENED WASHERS AND HEX NUTS. WASHERS SHALL BE USED BETWEEN WOOD & BOLT HEAD & BETWEEN WOOD & NUT. WHERE GENERIC FASTENERS ARE LABELED IN DETAILS, CAPACITIES SHALL BE EQUAL TO OR GREATER THAN HILTI KWIK BOLT II OR RED HEAD THRU BOLTS. EMBEDMENT DEPTHS SPECIFIED HEREIN ARE DEPTHS INTO SOLID SUBSTRATE AND DO NOT INCLUDE THICKNESS OF STUCCO OR OTHER FINISHES.

ALUMINUM MEMBERS IN CONTACT WITH CONCRETE AND WOOD SHALL BE PROTECTED BY "KOPPERS BITUMINOUS PAINT" OR POLYETHYLENE TAPE UHMW (ULTRA HIGH MOLECULAR WEIGHT) 11.7 mils (0.30 mm) MIN. TOTAL THICKNESS IN ACCORDANCE WITH CURRENT FLORIDA BUILDING CODE. ALL WELDS TO BE COVERED WITH ALUMINUM PAINT.

ENGINEERING EXPRESS HAS NOT VISITED THIS JOBSITE. INFORMATION CONTAINED HEREIN IS BASED ON CONTRACTOR SUPPLIED DATA AND MEASUREMENTS. ENGINEERING EXPRESS SHALL NOT BE HELD RESPONSIBLE OR LIABLE IN ANY WAY FOR ERRONEOUS OR INACCURATE DATA OR MEASUREMENTS. WORK SHALL BE FIELD VERIFIED PRIOR TO CONSTRUCTION. ENGINEERING EXPRESS SHALL BE NOTIFIED AND GIVEN AN OPPORTUNITY TO REEVALUATE OUR WORK UPON DISCOVERY OF ANY INACCURATE INFORMATION PRIOR TO MODIFICATION OF EXISTING FIELD CONDITIONS AND FABRICATION AND INSTALLATION OF MATERIALS.

ENGINEER SEAL AFFIXED HERETO VALIDATES STRUCTURAL DESIGN AS SHOWN ONLY. USE OF THIS SPECIFICATION BY CONTRACTOR, et. al. INDEMNIFIES & SAVES HARMLESS THIS ENGINEER FOR ALL COSTS & DAMAGES INCLUDING LEGAL FEES & APPELLATE FEES RESULTING FROM MATERIAL FABRICATION, SYSTEM ERECTION, & CONSTRUCTION PRACTICES BEYOND THAT WHICH IS CALLED FOR BY LOCAL, STATE, & FEDERAL CODES & FROM DEVIATIONS OF THIS PLAN. EXCEPT AS EXPRESSLY PROVIDED IN HEREIN, NO CERTIFICATIONS OR AFFIRMATIONS ARE INTENDED.

FRANK L. BENNARDO, P.E.
PE0046549

12/20/2012

VALID FOR ( ) JOB# ONLY
VALID ONLY WITH RAISED ENGINEER SEAL

LICENSED AFFILIATE OF
ENGINEERING EXPRESS®
160 SW 12th AVENUE, #106
DEERFIELD BEACH, FL. 33442
Ph: (954) 354-0660 Fax: (954) 354-0443
WWW.ENGEXP.COM
CE/AT OF AUTH #9985

NEPTUNE BOAT LIFTS
100 SW 6th STREET
FORT LAUDERDALE, FL 33301
PHONE: (954) 524-3616 FAX: (954) 524-3604

ALUMINUM 4-POST STANDARD BOAT LIFT

REMARKS	DRWN	CHKD	DATE
INIT ISSUE	TSB	FLB	04/24/09
REV FOR 2010 FBC	TSB	FLB	3-30-12
CHANGED TO 175 MPH	AML	FLB	03.14.12

00-NBL-0002

SCALE: 01

PAGE DESCRIPTION:

1 of 3

1

87

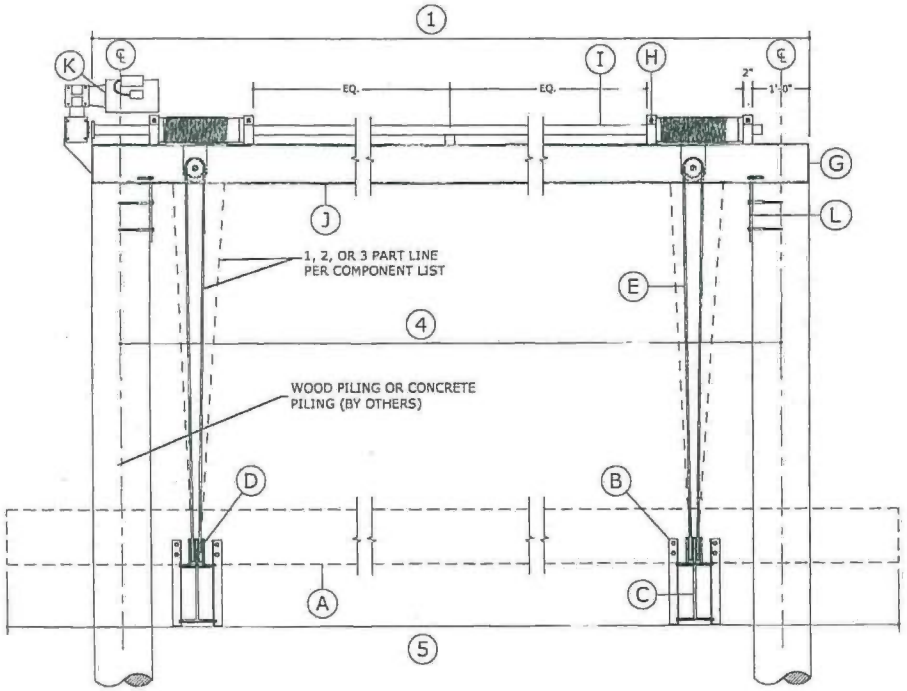

SECTION A
SCALE 1/2" = 1'-0"

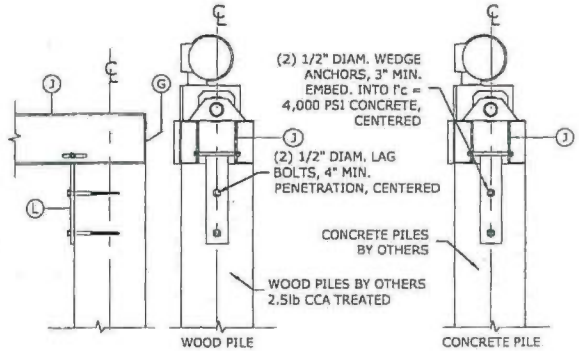

PILE MOUNTING DETAIL
SCALE ¾" = 1'-0"

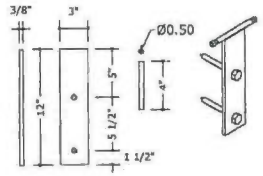

MOUNTING BRACKET DETAIL
SCALE 1" = 1'-0"

FRANK L. BENNARDO, P.E.
#PE0046549

12/20/2012

VALID FOR (1) JOB ONLY-
VALID ONLY WITH RAISED ENGINEER SEAL

LICENSED AFFILIATE OF
ENGINEERING EXPRESS®
160 SW 12th AVENUE, #106
DEERFIELD BEACH, FL 33442
Ph: (954) 354-0660 Fax: (954) 354-0443
WWW.ENGEXP.COM
CERT OF AUTH #8985

NEPTUNE BOAT LIFTS
100 SW 6th STREET
FORT LAUDERDALE, FL 33301
PHONE: (954) 524-3616 FAX: (954) 524-3604

ALUMINUM 4-POST STANDARD BOAT LIFT

REMARKS	DRWN	CHKD	DATE
INIT ISSUE	TSB	FLB	04/24/09
REV FOR 2010 FBC	TSB	FLB	3-30-12

00-NBL-0002

SCALE: 01

PAGE DESCRIPTION:

2 of 3

12/20/2012 - 10:32am kal F:\01 Project Files\Neptune Boat Lifts (NBL)\Master Plan Sheets\00-NBL-0002 4post Standard LiftsM Post Lift MPS_01a (2010 FBC).dwg

49

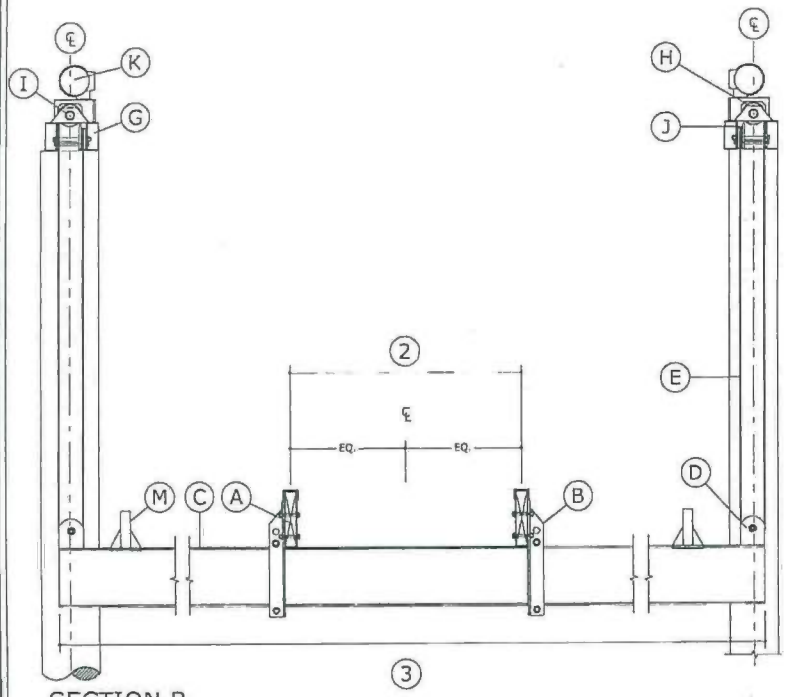

SECTION B
SCALE 1/2" = 1'-0"

LIST OF COMPONENTS

	LIFT CAPACITY (LB)	4,500	7,000	10,000	13,000	16,000	20,000	24,000
Ⓐ	BUNK	3"X8" PT SYP#1			3"X10" PT SYP#1			3"X12" PT SYP#1
Ⓑ	BUNK BRACKET SUPPORT	1/4"X2"X2"						
Ⓒ	LIFTER BEAM	AA I 6"X4.7		AA I 8"X6.3	AA I 8"X7.0	AA I 10"X10.3		AA I 12"X14.3
Ⓓ	SHEAVE PULLY PLATE	1/4"X4"X5" ANGLE						
Ⓔ	SS WIRE ROPE	5/16" 7X19 SS 304 (1 PART)		5/16" 7X19 SS 304 (2 PART)			5/16" 7X19 SS 304 (3 PART)	
Ⓕ	PILING MOUNT BRACKET	3/8"X3"X12" FLAT BAR						
Ⓖ	CARRIER BEAM END PLATE	1/4"X5" FLAT BAR		1/4"X6" FLAT BAR	1/4"X7" FLAT BAR		1/4"X8" FLAT BAR	
Ⓗ	DRIVE SHAFT BEARING BLOCK	2"X3" FLAT BAR						
Ⓘ	DRIVESHAFT	1-1/2" NOM. DIA. SH80 GALV PIPE						
Ⓙ	TOP CARRIER ASSEMBLY (2 C-CHANNELS PER ASSY)	AA CS 5"X2.2		AA CS 6"X2.8	AA CS 7"X3.2		AA CS 8"X4.3	AA CS 8"X5.6
Ⓚ	MOTOR AND GEAR BOX	ALUM. HOUSING						
Ⓛ	TOP CARRIER CONNECTOR	3/8"X3"X12" FLAT BAR						
Ⓜ	GUIDE POST SOCKET	2" NOM. DIA. SH80 ALUMN PIPE						

LIST OF DIMENSIONS

LIFT CAPACITY (LB)		4,500	7,000	10,000	13,000	16,000	20,000	24,000
DIMENSION MARK	①	150"	150"	150"	150"	150"	150"	192
	②	48"	48"	48"	48"	48"	48"	48"
	③	144"	144"	150"	150"	168"	168"	192"
	④	142"	142"	142"	142"	142"	142"	182"
	⑤	144"	144"	144"	144"	144"	168"	216"

FRANK L. BENNARDO, P.E.
PE0046549
12/20/2012
VALID FOR THIS JOB ONLY
VALID ONLY WITH RAISED ENGINEER SEAL

LICENSED AFFILIATE OF
ENGINEERING EXPRESS®
160 SW 12th AVENUE, #106
DEERFIELD BEACH, FL 33442
Ph: (954) 354-0660 Fax: (954) 354-0443
WWW.ENGEXP.COM
CERT OF AUTH #4683

NEPTUNE BOAT LIFTS
100 SW 6th STREET
FORT LAUDERDALE, FL 33301
PHONE: (954) 524-3616 FAX: (954) 524-3604

ALUMINUM 4-POST STANDARD BOAT LIFT

REMARKS	DRWN	CHKD	DATE
INIT ISSUE	TSB	FLB	04/24/09
REV FOR 2010 FBC	TSB	FLB	3-30-12

00-NBL-0002
SCALE: 01
PAGE DESCRIPTION:

3 OF 3

12/20/2012 - 10:33am kat F:\01 Project Files\Neptune Boat Lifts (NBL)\Master Plan Sheets\00-NBL-0002 4post Standard Lift\4 Post Lift MPS_Sta (2010 FBC).dwg

50

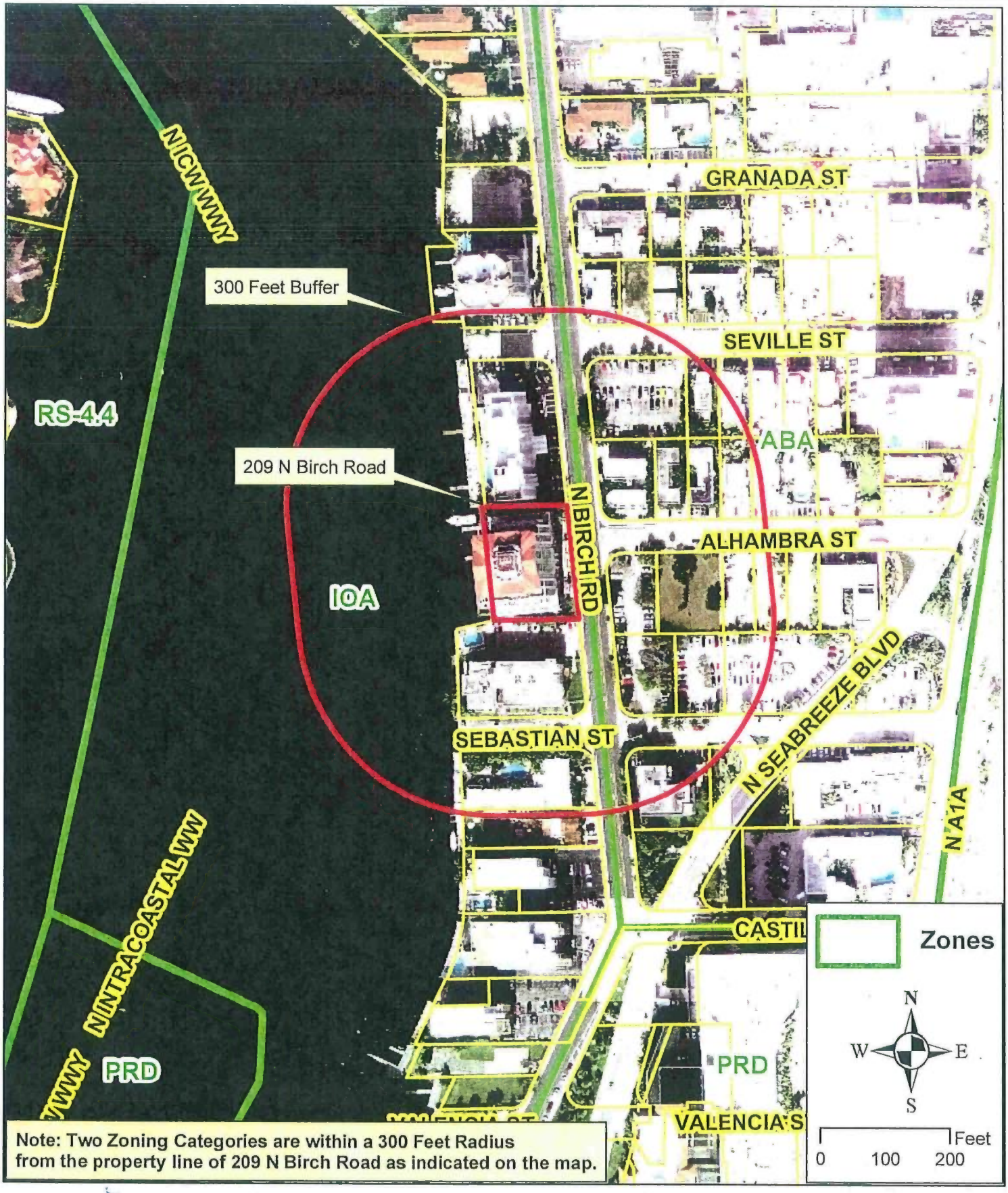

Note: Two Zoning Categories are within a 300 Feet Radius from the property line of 209 N Birch Road as indicated on the map.

CITY OF FORT LAUDERDALE

209 N Birch Road

51

Plot Date: 05/01/09

Projects on GIS1: p:/ced_dockmaster/arcgis/209_N_Birch_Road.mxd