BROWARD COUNTY GO SOLAR

BROWARD COUNTY ENVIRONMENTAL PLANNING AND GROWTH MANAGEMENT DEPARTMENT

BROWARD ROOFTOP SOLAR PHOTOVOLTAIC ROOFTOP MOUNTING SYSTEMS

DRAWING INDEX

COV COVER

ARCHITECTURAL

A1 PLAN VIEW
A2 SECTION
A3 SECTIONS
A4 CALCULATIONS
A5 WATERPROOFING DETAILS

CARTAYA & ASSOCIATES ARCHITECTS, P.A.

3077 E. COMMERCIAL BLVD. SUITE 201 FT. LAUDERDALE, FL. 33308 954-771-2724 (ARCHTECTURE)

TY LIN INTERNATIONAL, INC.

201 ALHAMBRA CIRCLE, SUITE 900 CORAL GABLE, FL. 33134 305-567-1888 (STRUCTURAL/M.E.P./ENGINEERING)

CARTAYA & ASSOCIATES ARCHITECTS P.A.

3077 E. COMMERCIAL BLVD. SUITE 201
FT. LAUDERDALE, FLORIDA 33308
771-2724 FAX 776-4280

BEU AA C001888

PROJECT: PHOTOVOLTAIC SYSTEM PROTOTYPE DESIGN
GO SOLAR - BROWARD COUNTY
ENVIRONMENTAL PLANNING AND GROWTH MANAG. DEPT.

ALL DESIGNS, AND DETAILS INDICATED OR REPRESENTED BY THIS DRAWING ARE AND SHALL REMAIN THE PROPERTY OF CARTAYA & ASSOCIATES ARCHITECTS P.A. AND SHALL NOT BE USED OR REPRODUCED IN WHOLE OR IN PART WITHOUT WRITTEN PERMISSION FROM CARTAYA & ASSOCIATES ARCHITECTS P.A. AND SHALL BE RETURNED UPON REQUEST. ALL VISUAL CONTACTS WITH THESE PLANS SHALL CONSTITUTE PRIMA FACIE EVIDENCE OF ACCEPTANCE OF THESE RESTRICTIONS. CONTRACTOR SHALL VERIFY AND BE RESPONSIBLE FOR ALL DIMENSIONS AND CONDITIONS ON THE JOB. ANY DISCREPANCIES MUST BE REPORTED TO THE ARCHITECT BEFORE ANY WORK IS PERFORMED. DO NOT SCALE DRAWINGS. ANY WORK DONE OR MATERIALS PURCHASED BY CONTRACTOR PRIOR TO THE EXECUTION OF THE WORK, WHERE CONTRACTOR HAS NOTIFIED THE ARCHITECT IN WRITING OF ANY DISCREPANCY AND RECEIVED WRITTEN APPROVAL TO PROCEED, SHALL BE AT CONTRACTOR'S OWN RISK. WRITTEN DIMENSIONS TAKE PRECEDENCE. OVER SCALED DIMENSIONS.

REVISIONS

DATE: OCTOBER 15, 2012
DRAWN BY: YR
CHECKED BY: JJ

TITLE: COVER SHEET

JOB NO: 1236

SHEET: COV
1 OF 1

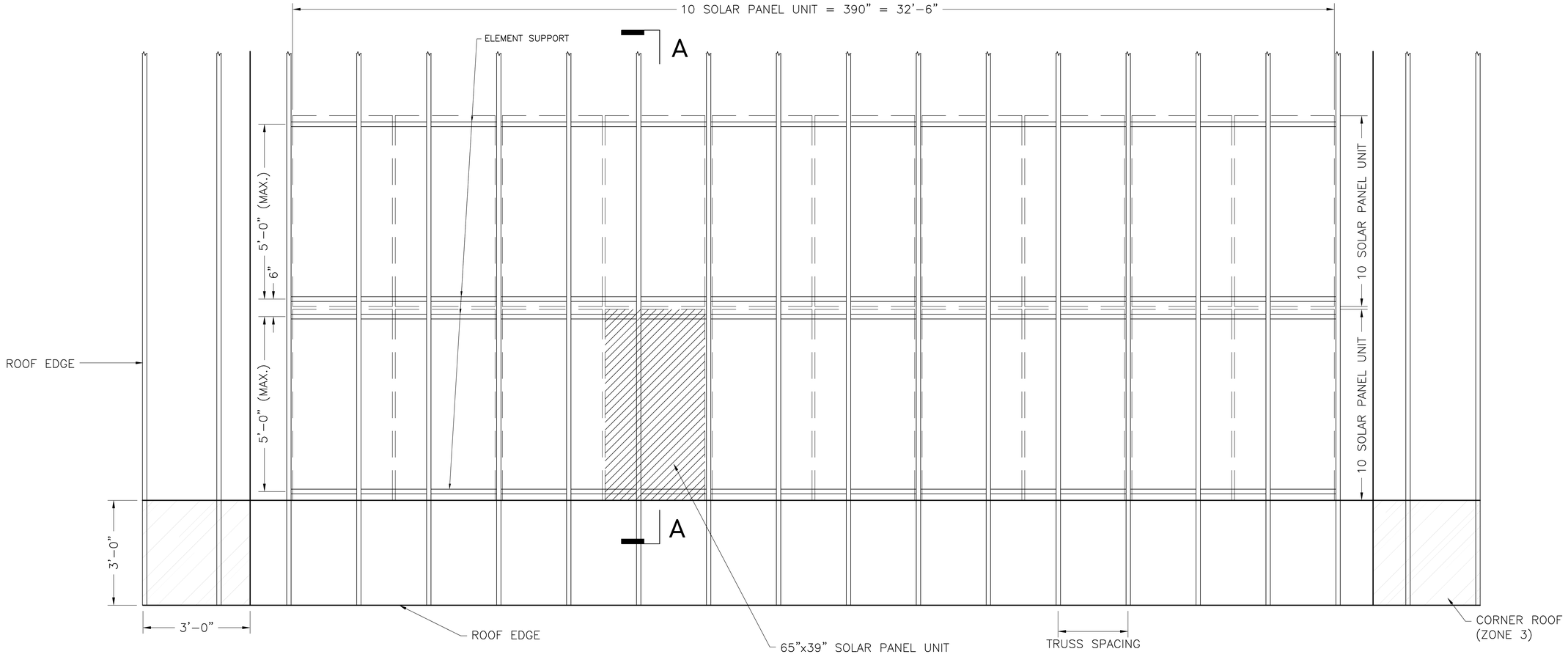

PLAN VIEW

NTS

LAYOUT FOR 65"x39" SOLAR PANEL UNIT ON ROOF ZONE 1 PER FBC 2010
(LOCATION SHALL NOT BE WITHIN ZONES 2 AND 3 AS SHOWN)

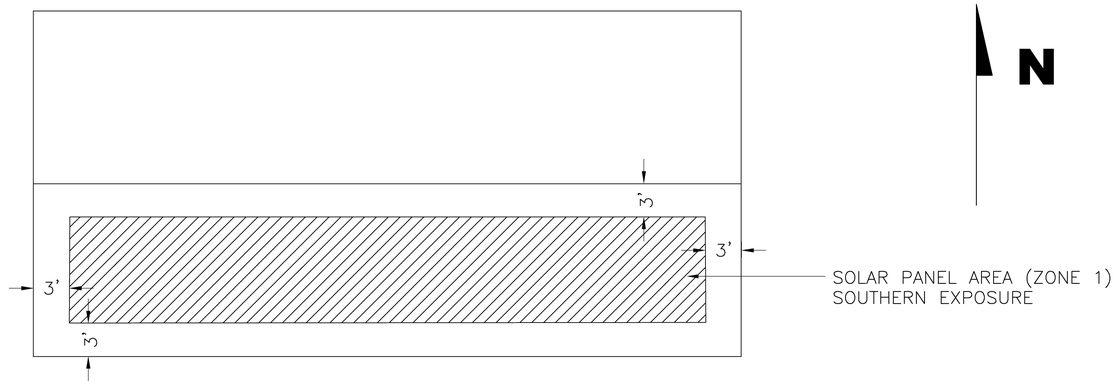

ROOF PLAN

NTS

CARTAYA & ASSOCIATES ARCHITECTS P.A.
3077 E. COMMERCIAL BLVD. SUITE 201
FT. LAUDERDALE, FLORIDA 33308
771-2724 FAX 776-4280

SEAL: AA C001388

PROJECT: PHOTOVOLTAIC SYSTEM PROTOTYPE DESIGN
GO SOLAR - BROWARD COUNTY
ENVIRONMENTAL PLANNING AND GROWTH MANAG. DEPT.

ALL DESIGNS AND DETAILS INDICATED OR REPRESENTED BY THIS DRAWING ARE FOR USE ON AND IN CONJUCTION WITH THE SPECIFIED PROJECT. THIS IS THE PROPERTY OF CARTAYA AND ASSOCIATES ARCHITECTS, P.A. AND SHALL NOT BE USED OR REPRODUCED IN WHOLE OR IN PART WITHOUT WRITTEN PERMISSION FROM A PRINCIPAL OF THE FIRM OR BE LIABLE FOR THE FULLEST LEGAL RECOURSE. THE CONTRACTOR SHALL VERIFY ALL EXISTING CONDITIONS AND DIMENSIONS AND NOTIFY THIS OFFICE OF ANY DISCREPANCIES PRIOR TO THE EXECUTION OF THE WORK. WRITTEN DIMENSIONS TAKE PRECEDENCE OVER SCALED DIMENSIONS.

REVISIONS:

DATE: OCTOBER 15, 2012
DRAWN BY: YR
CHECKED BY: JJ

TITLE: PLAN VIEW

JOB NO: 1236

SHEET: A-1
1 OF 5

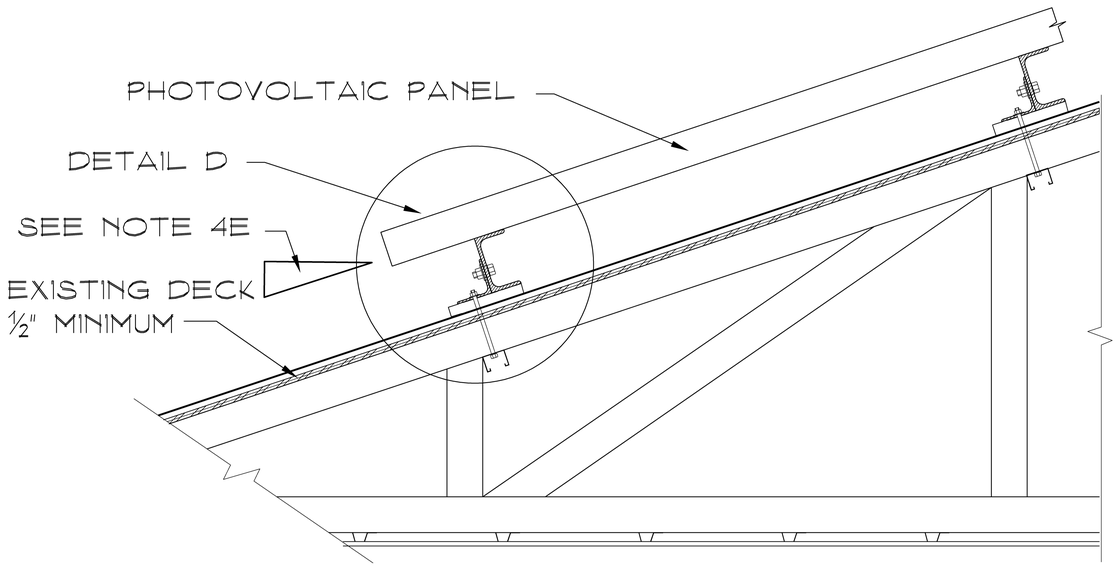

A / A-1 SECTION

SCALE: 1" = 1'-0"

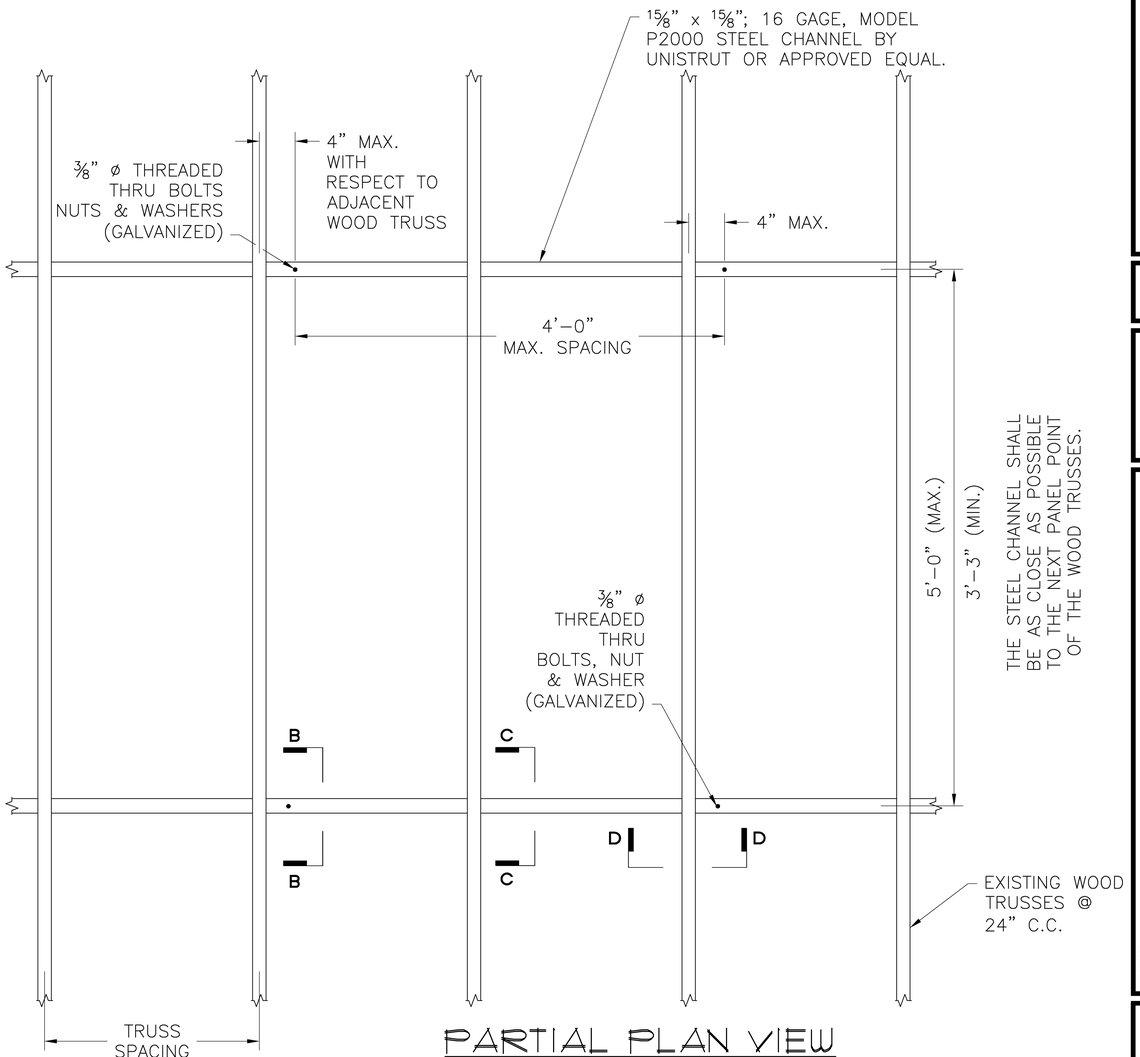

PARTIAL PLAN VIEW
SOLAR PANEL ATTACHMENT

GENERAL NOTES:

1. DESIGN LOAD CRITERIA

WIND LOAD

a. FLORIDA BUILDING CODE 2010
b. SCE 7-10, HURRICANE PRONE REGION
c. BASIC SPEED – 170 mph
d. EXPOSURE CATEGORY : C
e. RISK CATEGORY : II

2. STRUCTURAL STEEL AND BOLTS SHALL CONFORM TO ASTM A36

3. ALL METALLIC AND STEEL ELEMENTS THAT INVOLVED IN THE FIXING PANEL SOLAR SYSTEM MUST BE HOT-DIP GALVANIZED.

4. CONSIDERATION:
a. THESE NOTES SET OUT THE PARAMETERS UNDER WHICH THE SOLAR PANELS MUST BE INSTALLED.
b. BROWARD COUNTY
c. RESIDENTIAL
d. 30' MAXIMUM HEIGHTS IN RESIDENTIAL ROOF
e. THE SLOPE OF THE ROOF MAY BE FROM 0° TO 45° MAX
f. SOLAR PANEL MUST WITHSTAND WIND LOADS. THE FOLLOWING MAX. LOADS:
– DOWNWARD DIRECTION: + 70 PSF
– UPWARD DIRECTION: –79 PSF

CARTAYA & ASSOCIATES ARCHITECTS P.A.
3077 E. COMMERCIAL BLVD. SUITE 201
FT. LAUDERDALE, FLORIDA 33308
771-2724 FAX 776-4280

SEAL: AA C001388

PROJECT: PHOTOVOLTAIC SYSTEM PROTOTYPE DESIGN
GO SOLAR - BROWARD COUNTY
ENVIRONMENTAL PLANNING AND GROWTH MANAG. DEPT.

ALL DESIGNS AND DETAILS INDICATED OR REPRESENTED BY THIS DRAWING ARE FOR USE ON AND IN CONJUCTION WITH THE SPECIFIED PROJECT. THIS IS THE PROPERTY OF CARTAYA AND ASSOCIATES ARCHITECTS, P.A. AND SHALL NOT BE USED OR REPRODUCED IN WHOLE OR IN PART WITHOUT WRITTEN PERMISSION FROM A PRINCIPAL OF THE FIRM OR BE LIABLE FOR THE FULLEST LEGAL RECOURSE. THE CONTRACTOR SHALL VERIFY ALL EXISTING CONDITIONS AND DIMENSIONS AND NOTIFY THIS OFFICE OF ANY DISCREPANCIES PRIOR TO THE EXECUTION OF THE WORK. WRITTEN DIMENSIONS TAKE PRECEDENCE OVER SCALED DIMENSIONS.

REVISIONS:

DATE: OCTOBER 15, 2012
DRAWN BY: YR
CHECKED BY: JJ

TITLE: SECTION

JOB NO: 1236

SHEET: A-2
2 OF 5

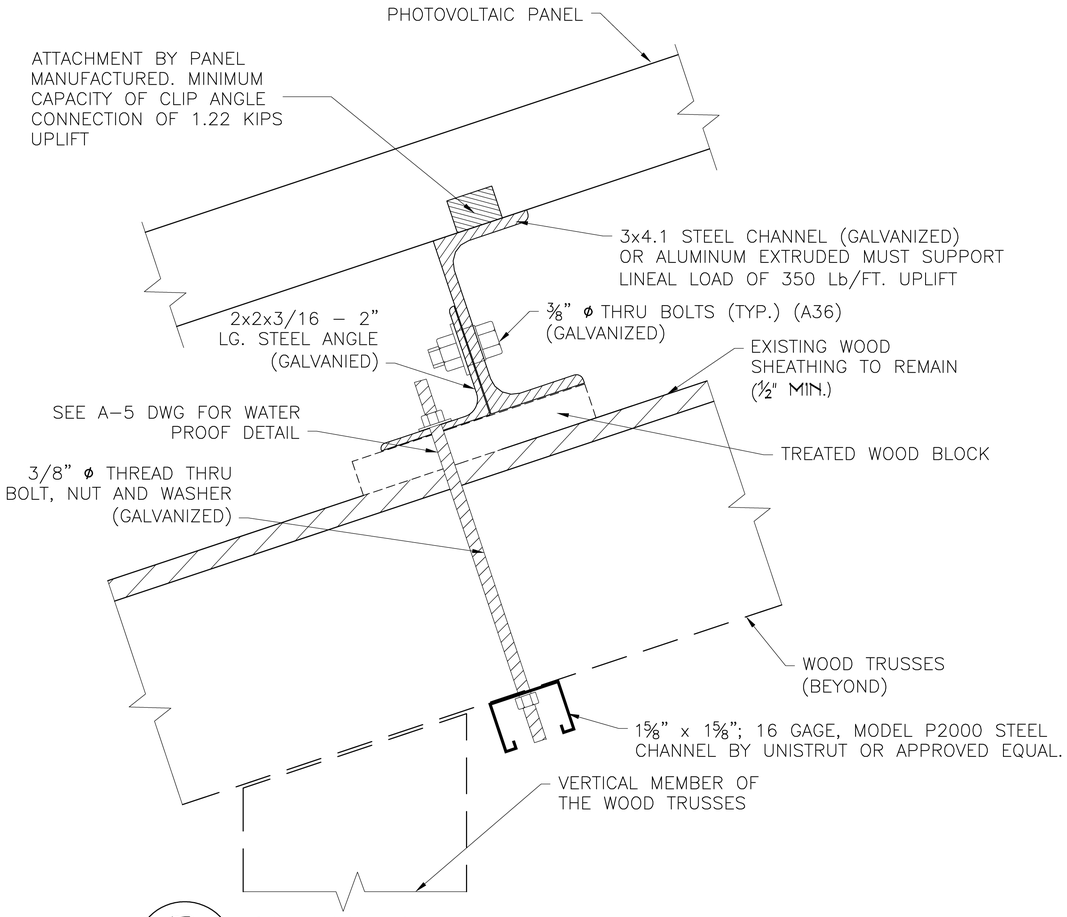

B / A-2 SECTION B-B DETAIL D

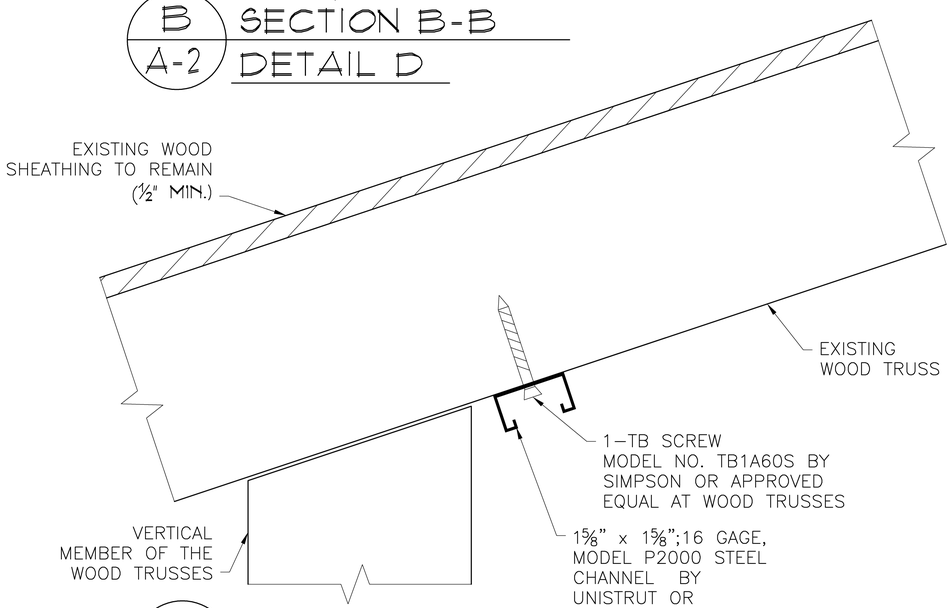

C / A-2 SECTION C-C (TEMPORARY SUPPORT)

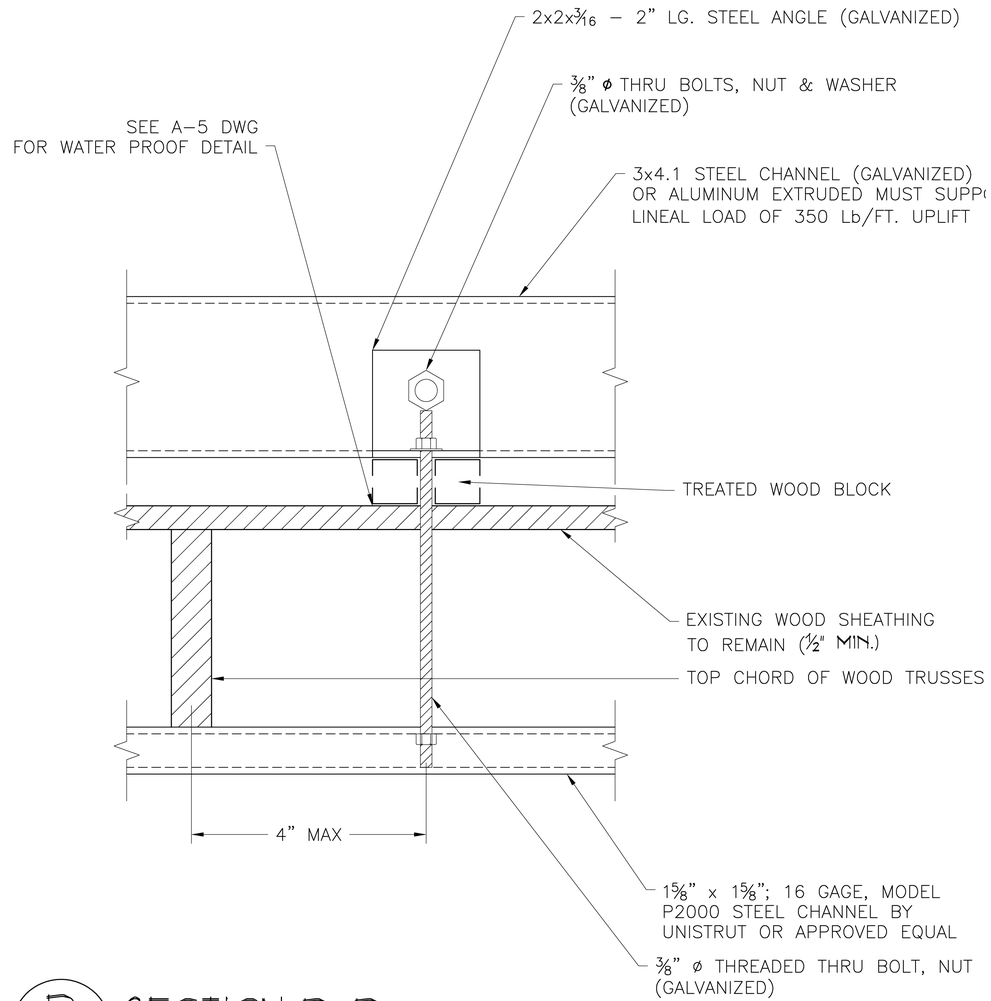

D / A-2 SECTION D-D

CARTAYA & ASSOCIATES ARCHITECTS P.A.
3077 E. COMMERCIAL BLVD. SUITE 201
FT. LAUDERDALE, FLORIDA 33308
771–2724 FAX 776–4280

SEAL: AA C001388

PROJECT: PHOTOVOLTAIC SYSTEM PROTOTYPE DESIGN
GO SOLAR - BROWARD COUNTY
ENVIRONMENTAL PLANNING AND GROWTH MANAG. DEPT.

ALL DESIGNS AND DETAILS INDICATED OR REPRESENTED BY THIS DRAWING ARE FOR USE ON AND IN CONJUCTION WITH THE SPECIFIED PROJECT. THIS IS THE PROPERTY OF CARTAYA AND ASSOCIATES ARCHITECTS P.A. AND SHALL NOT BE USED OR REPRODUCED IN WHOLE OR IN PART WITHOUT WRITTEN PERMISSION FROM A PRINCIPAL OF THE FIRM OR BE LIABLE FOR THE FULLEST LEGAL RECOURSE. THE CONTRACTOR SHALL VERIFY ALL EXISTING CONDITIONS AND DIMENSIONS AND NOTIFY THIS OFFICE OF ANY DISCREPANCIES PRIOR TO THE EXECUTION OF THE WORK. WRITTEN DIMENSIONS TAKE PRECEDENCE OVER SCALED DIMENSIONS.

REVISIONS:

DATE: OCTOBER 15, 2012
DRAWN BY: YR
CHECKED BY: JJ

TITLE: SECTION

JOB NO: 1236

SHEET: A-3
3 OF 5

WIND LOAD PRESSURE

Using Rooftop Structures and Equipments (29.5.1 Sheet 308) Broward County

Residential: II risk category. (Table 1.5.1/ Sheet 2)

V= 170 Mph

K_d= 0.85 (Table 26.6-1/ Sheet 250)
K_{zt}= 1.0

Z= 15' → K_z = 0.85 (Table 29.3-1/ Sheet 310)
Z= 20' → K_z = 0.90
Z= 25' → K_z = 0.94
Z= 30' → K_z = 0.98

$Q = 0.00256\ K_z \times K_{zt} \times K_d \times V^2$

$q_{15'}$ = 53.4 lb/ft^2
$q_{20'}$ = 56.6 lb/ft^2
$q_{25'}$ = 59.1 lb/ft^2
$q_{30'}$ = 61.6 lb/ft^2

Note:

1- We use zone 2 for the calculation of wind load, assuming that the panels may be installed in zone 1 and 2.
2- We consider that the panels are part of the roof and GC_{pi} = ± 0.18 (Worst Condition)

Θ≤7° (Gable Roof) Fig 30.A-2A/ Sheet 336
GC_{p12S} = +0.3
GC_{p2} = -1.8 **(This coefficient value is the most critical for the upward load.)**

7°<Θ≤27° (Gable/ Hip Roof) Fig 30.4-2B/ Sheet 337)
GC_{p12S} = +0.5
GC_{p2} = -1.7

27°<Θ≤45° (Gables Roof) Fig 30.4-2C/ Sheet 338
GC_{p12S} = +0.9 **(This coefficient value is the most critical for the downward load.)**
GC_{p2} = -1.2

$P = q_h\ [(GC_p) - (GC_{pi})]$

27°<Θ≤45° h = 30'
p_{12S} = 61.6[0.9-(-0.18)] = +66.5 lb/ft^2 **(Downward Pressure)**

Θ≤7° h = 30'
p_2 = 61.6[-1.8-(+0.180] = 122 lb/ft^2 **(Upward Pressure)**

27°<Θ≤45° (Monoslope roof) Fig 30.4-5A/ Sheet 341
GC_{p12S} = +0.3
GC_{p2} = -1.7

CONNECTION DESIGN

Panel Point Spacing 5'-0" Max

Uplift @ Connect

$$F = 122\frac{lb}{ft^2} \times \frac{5"}{2} \times 4' = 1220\ lb/Connection/Upward$$

4': Max Spacing Anchor

Steel Channel Design

$$M = \frac{F \times a \times b}{l} = \frac{1.22 \times 0.33 \times 1.66'}{2'} = 0.334\ k.ft$$

$$S_{Req} = \frac{M}{0.6F_y} = \frac{0.334 \times 1.2"}{0.6 \times 36} = 0.016n^3 < 0.072\ n^3 \rightarrow$$ Steel Channel $1\ ^5/_8" \times\ ^7/_8" \times$ 12gauge S=0.072n^3 I = 0.037n^4

Model No. P3300

Steel Track Design

$$W = \frac{122lb}{ft^2} \times 5'/_2 = 305\ lb/ft$$

$$\Delta = \frac{L}{360} = \frac{4' \times 12"}{360} 0.1333"$$

$$I = \frac{5 \times wl^4 \times 1728}{384 \times 29000 \times \Delta} = \frac{5 \times 0.305 \times 4^4 \times 1728}{384 \times 29000 \times 0.1333} = I = 0.46n^4$$

Use: [3x4.1 Steel Channel (I= 1.66n^4, S= 1.10 n^3)

Steel Bolt Anchor Design

F= 1.22k Tension

3/8" Φ area = πR^2= 0.1104n^2

For A36 Bolt → F_v= 58 k/n^2

F_t= 0.33F_v= 19.14 k/n^2

$F_{Allowed}$= A x F_t= 0.1104 x 19.14 k/n^2 = 2.1^k > 1.22^k (Tension) OK

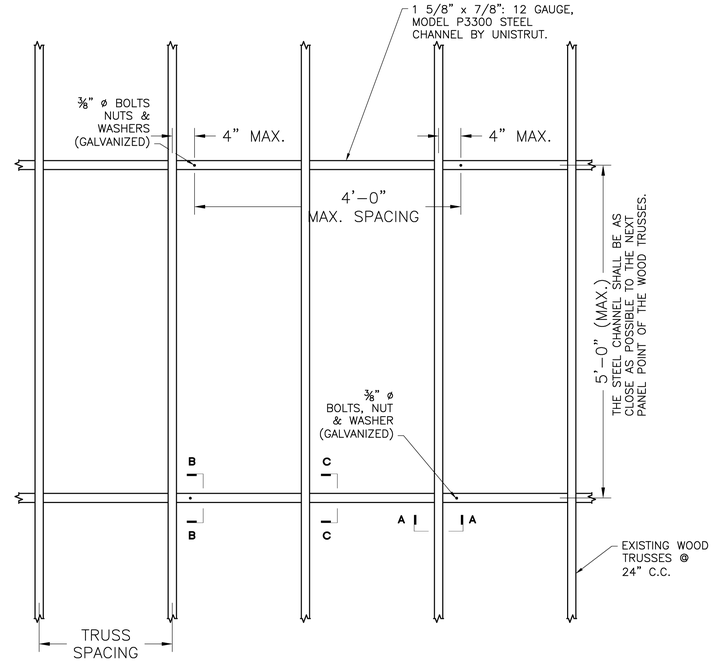

SOLAR PANEL ATTACHMENT
PLAN VIEW

CARTAYA & ASSOCIATES
ARCHITECTS P.A.
3077 E. COMMERCIAL BLVD. SUITE 201
FT. LAUDERDALE, FLORIDA 33308
771-2724 FAX 776-4280
BEU AA C001888

PROJECT: PHOTOVOLTAIC SYSTEM PROTOTYPE DESIGN
GO SOLAR - BROWARD COUNTY
ENVIRONMENTAL PLANNING AND GROWTH MANAG. DEPT.

THESE PLANS ARE THE PROPERTY OF CARTAYA & ASSOCIATES, ARCHITECTS P.A. AND SHALL NOT BE USED OR REPRODUCED IN ANY MANNER WITHOUT THE WRITTEN PERMISSION OF CARTAYA & ASSOCIATES, ARCHITECTS P.A. AND NOTIFY THE OFFICE OF ANY DISCREPANCIES PRIOR TO THE EXECUTION OF THE WORK. DO NOT SCALE DRAWINGS. ANY REPRODUCTIONS MADE WITHOUT WRITTEN PERMISSION OR ADAPTATIONS MADE BY ANY PERSONS OTHER THAN THE ARCHITECT FOR ANY PROJECT SHALL RELEASE THE ARCHITECT FROM ALL LIABILITY AND HOLD HARMLESS THE ARCHITECT FROM ANY AND ALL LIABILITY, REAL OR ALLEGED, IN CONNECTION THEREWITH. THE ARCHITECT SHALL BE NOTIFIED IMMEDIATELY OF ANY UNAUTHORIZED USE. ALL ARCHITECTURAL DRAWINGS ARE INSTRUMENTS OF SERVICE AND ARE THE PROPERTY OF THE ARCHITECT WHETHER THE PROJECT FOR WHICH THEY ARE PREPARED IS EXECUTED OR NOT. THE VISUAL CONTENTS OF THESE DRAWINGS, IN WHOLE OR IN PART, IS SUBJECT TO THE SAME RESTRICTIONS AND PROHIBITIONS. ANY REPRODUCTIONS MADE WITHOUT WRITTEN PERMISSION OR ADAPTATIONS MADE BY ANY PERSONS OTHER THAN THE ARCHITECT FOR ANY PROJECT SHALL RELEASE THE ARCHITECT FROM ALL LIABILITY AND HOLD HARMLESS THE ARCHITECT FROM ANY AND ALL LIABILITY, REAL OR ALLEGED, IN CONNECTION THEREWITH. THE ARCHITECT SHALL BE NOTIFIED IMMEDIATELY OF ANY UNAUTHORIZED USE. ALL ARCHITECTURAL DRAWINGS ARE INSTRUMENTS OF SERVICE AND ARE THE PROPERTY OF THE ARCHITECT WHETHER THE PROJECT FOR WHICH THEY ARE PREPARED IS EXECUTED OR NOT. THE VISUAL CONTENTS OF THESE DRAWINGS, IN WHOLE OR IN PART, IS SUBJECT TO THE SAME RESTRICTIONS AND PROHIBITIONS. ANY REPRODUCTIONS MADE WITHOUT WRITTEN PERMISSION OR ADAPTATIONS MADE BY ANY PERSONS OTHER THAN THE ARCHITECT FOR ANY PROJECT SHALL RELEASE THE ARCHITECT FROM ALL LIABILITY AND HOLD HARMLESS THE ARCHITECT FROM ANY AND ALL LIABILITY, REAL OR ALLEGED, IN CONNECTION THEREWITH. THE ARCHITECT SHALL BE NOTIFIED IMMEDIATELY OF ANY UNAUTHORIZED USE. ALL ARCHITECTURAL DRAWINGS ARE INSTRUMENTS OF SERVICE AND ARE THE PROPERTY OF THE ARCHITECT WHETHER THE PROJECT FOR WHICH THEY ARE PREPARED IS EXECUTED OR NOT. THE VISUAL CONTENTS OF THESE DRAWINGS, IN WHOLE OR IN PART, IS SUBJECT TO THE SAME RESTRICTIONS AND PROHIBITIONS. ANY REPRODUCTIONS MADE WITHOUT WRITTEN PERMISSION OR ADAPTATIONS MADE BY ANY PERSONS OTHER THAN THE ARCHITECT FOR ANY PROJECT SHALL RELEASE THE ARCHITECT FROM ALL LIABILITY AND HOLD HARMLESS THE ARCHITECT FROM ANY AND ALL LIABILITY, REAL OR ALLEGED, IN CONNECTION THEREWITH. THE ARCHITECT SHALL BE NOTIFIED IMMEDIATELY OF ANY UNAUTHORIZED USE. ALL ARCHITECTURAL DRAWINGS ARE INSTRUMENTS OF SERVICE AND ARE THE PROPERTY OF THE ARCHITECT WHETHER THE PROJECT FOR WHICH THEY ARE PREPARED IS EXECUTED OR NOT. THE VISUAL CONTENTS OF THESE DRAWINGS, IN WHOLE OR IN PART, IS SUBJECT TO THE SAME RESTRICTIONS AND PROHIBITIONS. ANY REPRODUCTIONS MADE WITHOUT WRITTEN PERMISSION OR ADAPTATIONS MADE BY ANY PERSONS OTHER THAN THE ARCHITECT FOR ANY PROJECT SHALL RELEASE THE ARCHITECT FROM ALL LIABILITY AND HOLD HARMLESS THE ARCHITECT FROM ANY AND ALL LIABILITY, REAL OR ALLEGED, IN CONNECTION THEREWITH. THE ARCHITECT SHALL BE NOTIFIED IMMEDIATELY OF ANY UNAUTHORIZED USE.

TITLE: CALCS

REVISIONS

DATE: OCTOBER 10, 2012
DRAWN BY: YR
CHECKED BY: JJ

JOB NO. 1236

SHEET: A-4
4 OF 5

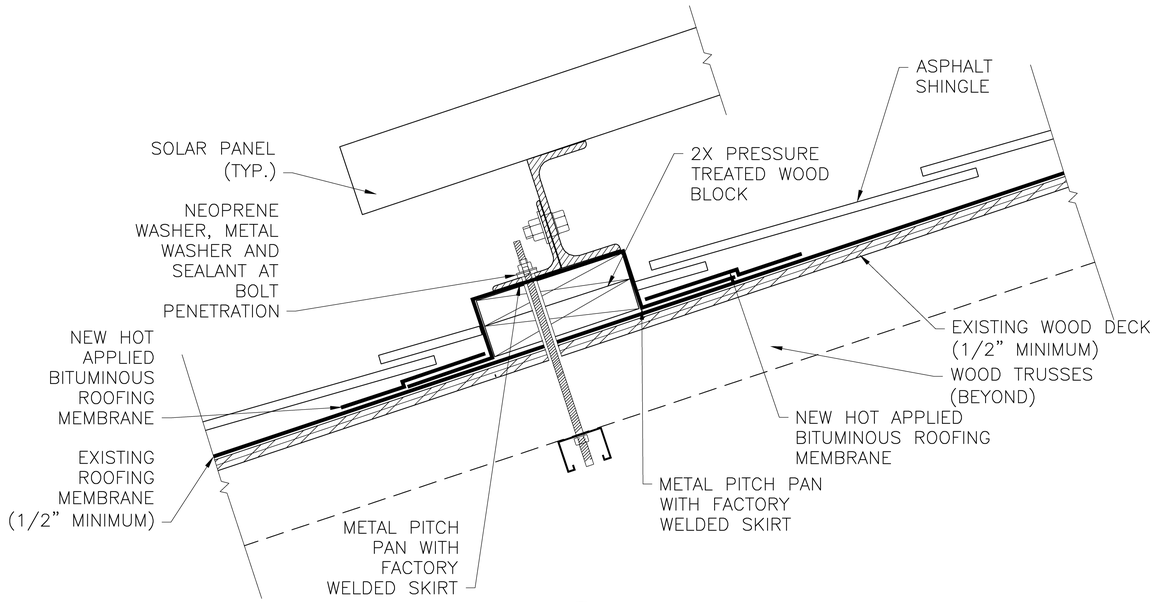

A / A-5 ASPHALT SHINGLE ROOFING WATERPROOFING DETAIL

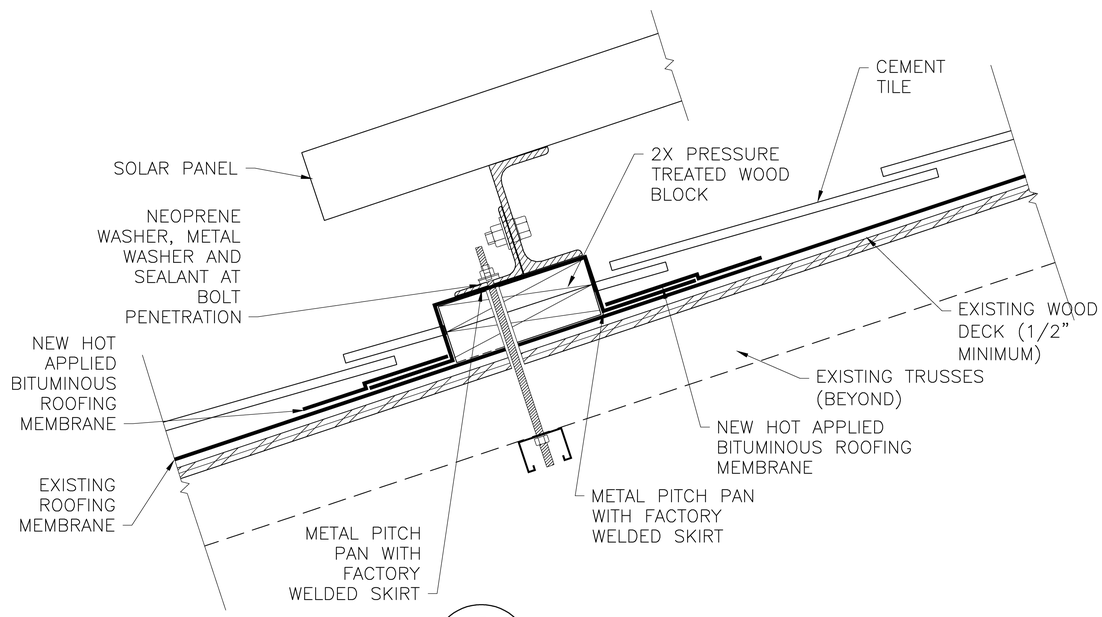

B / A-5 CEMENT TILE ROOFING WATERPROOFING DETAIL

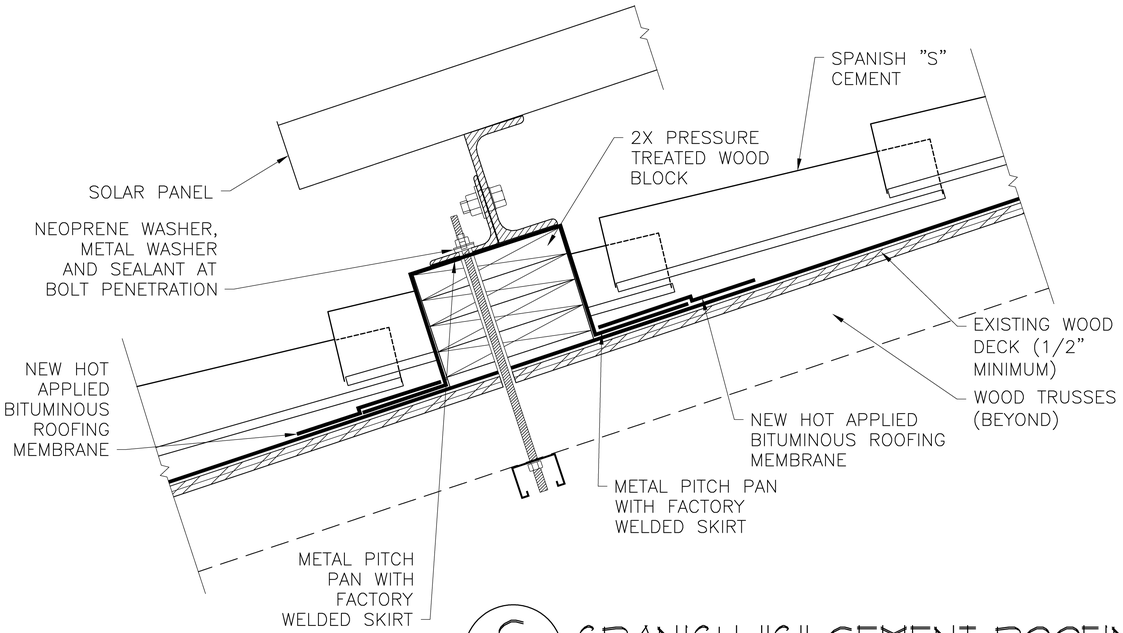

C / A-5 SPANISH "S" CEMENT ROOFING WATERPROOFING DETAIL

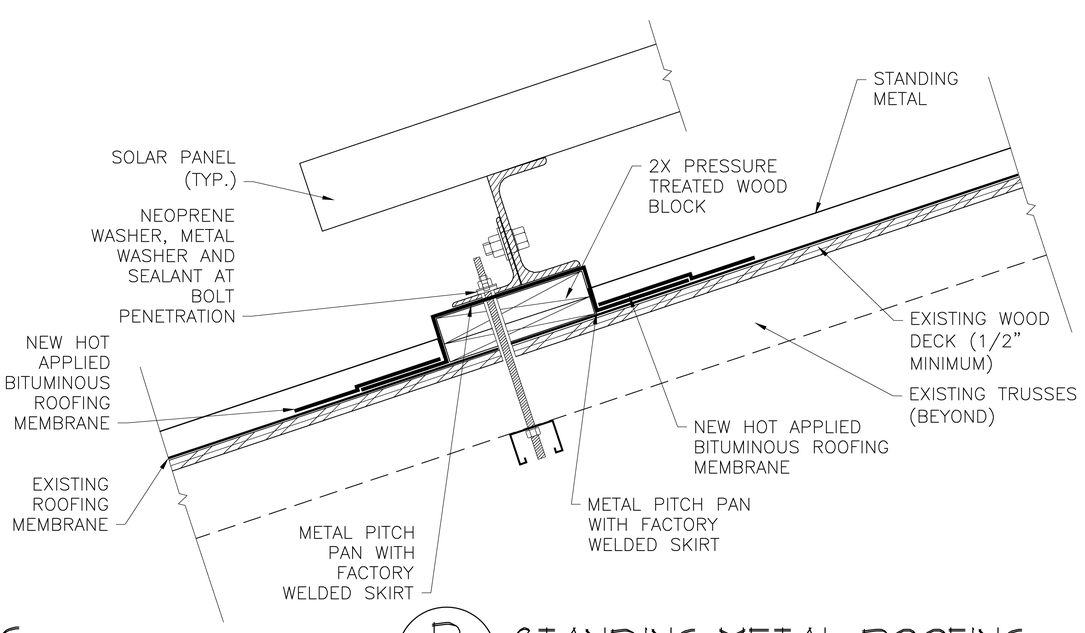

D / A-5 STANDING METAL ROOFING WATERPROOFING DETAIL

CARTAYA & ASSOCIATES ARCHITECTS P.A.
3077 E. COMMERCIAL BLVD. SUITE 201
FT. LAUDERDALE, FLORIDA 33308
771-2724 FAX 776-4280

SEAL: AA C001388

PROJECT: PHOTOVOLTAIC SYSTEM PROTOTYPE DESIGN
GO SOLAR - BROWARD COUNTY
ENVIRONMENTAL PLANNING AND GROWTH MANAG. DEPT.

ALL DESIGNS AND DETAILS INDICATED OR REPRESENTED BY THIS DRAWING ARE FOR USE ON AND IN CONJUNCTION WITH THE SPECIFIED PROJECT. THIS IS THE PROPERTY OF CARTAYA AND ASSOCIATES ARCHITECTS P.A. AND SHALL NOT BE USED OR REPRODUCED IN WHOLE OR IN PART WITHOUT WRITTEN PERMISSION FROM A PRINCIPAL OF THE FIRM OR BE LIABLE FOR THE FULLEST LEGAL RECOURSE. THE CONTRACTOR SHALL VERIFY ALL EXISTING CONDITIONS AND DIMENSIONS AND NOTIFY THIS OFFICE OF ANY DISCREPANCIES PRIOR TO THE EXECUTION OF THE WORK. WRITTEN DIMENSIONS TAKE PRECEDENCE OVER SCALED DIMENSIONS.

TITLE: WATERPROOFING DETAIL

REVISIONS:

DATE: OCTOBER 15, 2012
DRAWN BY: YR
CHECKED BY: JJ

JOB NO: 1236

SHEET: A-5
5 OF 5